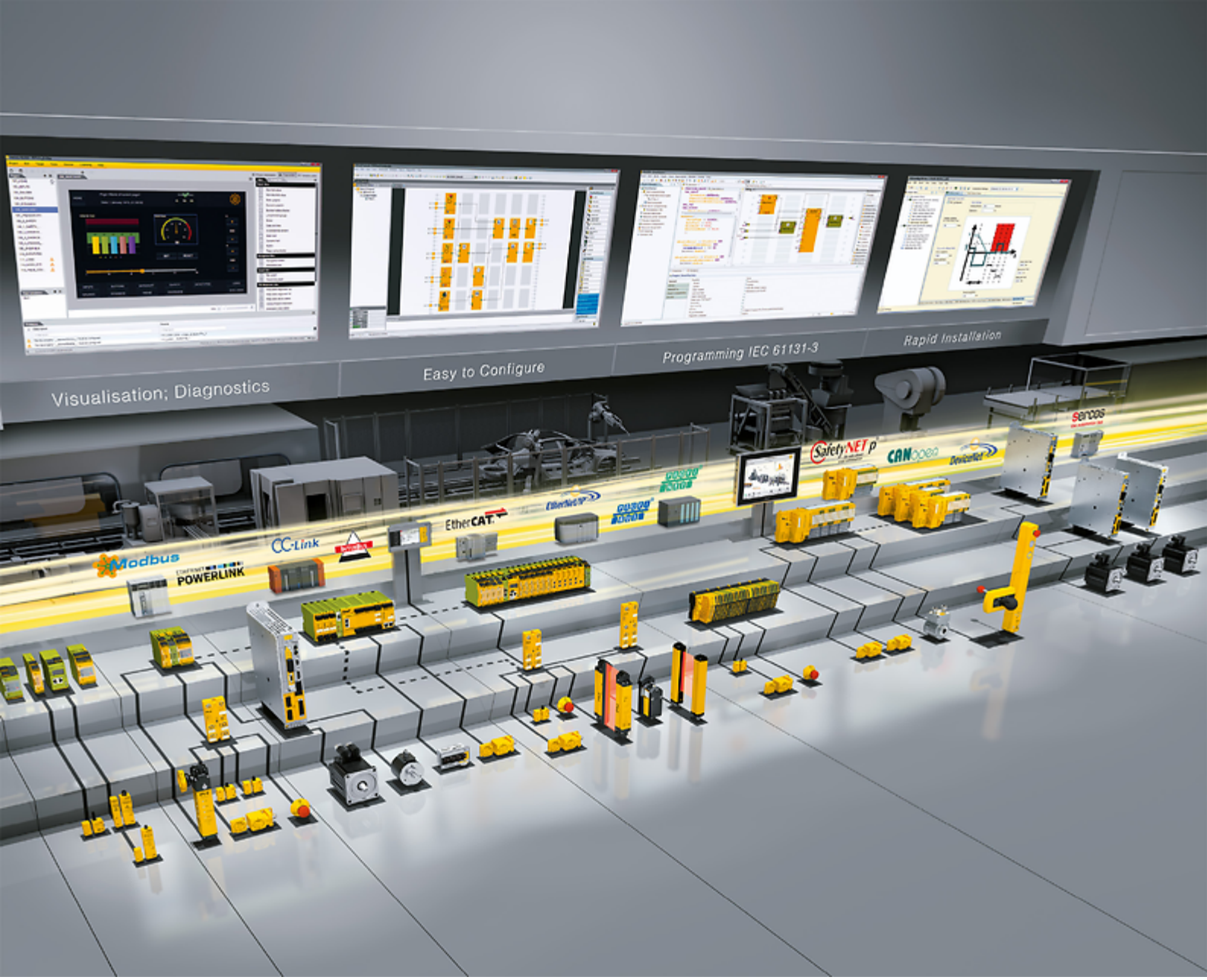

Modular safety relay myPNOZ

PILZ
THE SPIRIT OF SAFETY

Safety relays

System Description-1005377-EN-02

This document is the original document.

All rights to this documentation are reserved by Pilz GmbH & Co. KG. Copies may be made for the user's internal purposes. Suggestions and comments for improving this documentation will be gratefully received.

Source code from third-party manufacturers or open source software has been used for some components. The relevant licence information is available on the Internet on the Pilz homepage.

Pilz®, PIT®, PMI®, PNOZ®, Primo®, PSEN®, PSS®, PVIS®, SafetyBUS p®, SafetyEYE®, SafetyNET p®, the spirit of safety® are registered and protected trademarks of Pilz GmbH & Co. KG in some countries.


SD means Secure Digital

1 Introduction 8
1.1 Validity of documentation 8
1.2 Using the documentation 8
1.3 Third-party manufacturer licence information 8
1.4 Definition of symbols 8

2 Safety 10
2.1 Intended use 10
2.2 Safety regulations 10
2.2.1 Safety assessment 10
2.2.2 Use of qualified personnel 10
2.2.3 Warranty and liability 11
2.2.4 Disposal 11

3 Overview 12

4 Structure of myPNOZ 13
4.1 Application logic 17

5 Configuration 18
5.1 Configuration with myPNOZ Creator 18
5.2 Change configuration 18
5.3 Start types 19
5.3.1 Timing diagram for automatic and manual start 20
5.3.2 Timing diagram for monitored start with rising edge 20
5.3.3 Timing diagram for monitored start with rising and falling edge 21
5.3.4 Timing diagram for start with start-up test 21
5.4 Set start type and test pulse evaluation 21
5.5 Delay times 22
5.6 Set delay time 22

6 Reaction times 25

7 Consideration of the safety-related characteristic data 27

8 Installation and removal 29
8.1 Connect modules 30
8.2 Install myPNOZ on the mounting rail 31
8.3 Remove/exchange modules 31
8.4 Remove plug-in terminals 32
8.5 Mounting distances 33

9 Wiring 34
9.1 Connect the supply voltage 34
9.2 Connect control or switching elements to the inputs 35
9.3 Connect start button 37
9.4 Wire outputs 37
9.5 Connect feedback loop 38

10 Commissioning 40

11 Operation 41

12 Diagnostics 42
12.1 Status messages 42
12.2 Error messages 44
12.3 Errors on the safe outputs 49

13 Maintenance and testing 50
13.1 Function test of the relay outputs 50

14 Head modules 51
14.1 PNOZ yh1 2DI 24VDC 51
14.1.1 Device features 51
14.1.2 Front view 52
14.1.3 Block diagram 53
14.1.4 Dimensions 53
14.1.5 Technical details 54
14.1.6 Safety characteristic data 57
14.1.7 Classification according to ZVEI, CB24I 58
14.1.8 Order reference 58
14.1.8.1 Product 58
14.1.8.2 Accessories 58

15 Expansion modules 59
15.1 PNOZ yi1 4DI 59
15.1.1 Device features 59
15.1.2 Front view 60
15.1.3 Block diagram 61
15.1.4 Dimensions 61
15.1.5 Technical details 62
15.1.6 Safety characteristic data 64
15.1.7 Classification according to ZVEI, CB24I 65
15.1.8 Order reference 65
15.1.8.1 Product 65
15.1.8.2 Accessories 65
15.2 PNOZ yi2 4DI OR 66
15.2.1 Device features 66
15.2.2 Front view 67
15.2.3 Block diagram 67
15.2.4 Dimensions 68
15.2.5 Technical details 68
15.2.6 Safety characteristic data 71
15.2.7 Classification according to ZVEI, CB24I 72
15.2.8 Order reference 72
15.2.8.1 Product 72
15.2.8.2 Accessories 72
15.3 PNOZ yi3 2DI T3A 73

15.3.1 Device features ... 73
15.3.2 Front view ... 74
15.3.3 Block diagram ... 74
15.3.4 Dimensions ... 75
15.3.5 Technical details ... 75
15.3.6 Safety characteristic data ... 78
15.3.7 Classification according to ZVEI, CB24I ... 79
15.3.8 Order reference ... 79
15.3.8.1 Product ... 79
15.3.8.2 Accessories ... 79
15.4 PNOZ yi4 2DI T3C ... 80
15.4.1 Device features ... 80
15.4.2 Front view ... 81
15.4.3 Block diagram ... 81
15.4.4 Dimensions ... 82
15.4.5 Technical details ... 82
15.4.6 Safety characteristic data ... 85
15.4.7 Classification according to ZVEI, CB24I ... 86
15.4.8 Order reference ... 86
15.4.8.1 Product ... 86
15.4.8.2 Accessories ... 86
15.5 PNOZ yo1 2SO ... 87
15.5.1 Device features ... 87
15.5.2 Front view ... 88
15.5.3 Block diagram ... 89
15.5.4 Dimensions ... 89
15.5.5 Technical details ... 90
15.5.6 Safety characteristic data ... 92
15.5.7 Classification according to ZVEI, CB24I ... 93
15.5.8 Order reference ... 93
15.5.8.1 Product ... 93
15.5.8.2 Accessories ... 93
15.6 PNOZ yo2 3NO ... 94
15.6.1 Device features ... 94
15.6.2 Front view ... 95
15.6.3 Block diagram ... 95
15.6.4 Dimensions ... 96
15.6.5 Technical details ... 96
15.6.6 Safety characteristic data ... 99
15.6.7 Classification according to ZVEI, CB24I ... 100
15.6.8 Supplementary data ... 101
15.6.8.1 Permitted operating height ... 101
15.6.8.2 Service life graph ... 101
15.6.9 Order reference ... 102
15.6.9.1 Product ... 102
15.6.9.2 Accessories ... 102
15.7 PNOZ yo3 1SO 1SO t ... 103
15.7.1 Device features ... 103
15.7.2 Front view ... 104

15.7.3 Block diagram ... 105
15.7.4 Dimensions ... 105
15.7.5 Technical details ... 106
15.7.6 Safety characteristic data ... 109
15.7.7 Classification according to ZVEI, CB24I ... 110
15.7.8 Order reference ... 110
15.7.8.1 Product ... 110
15.7.8.2 Accessories ... 110
15.8 PNOZ yo4 3NO t ... 111
15.8.1 Device features ... 111
15.8.2 Front view ... 112
15.8.3 Block diagram ... 113
15.8.4 Dimensions ... 113
15.8.5 Technical details ... 114
15.8.6 Safety characteristic data ... 117
15.8.7 Classification according to ZVEI, CB24I ... 118
15.8.8 Supplementary data ... 118
15.8.8.1 Permitted operating height ... 118
15.8.8.2 Service life graph ... 119
15.8.9 Order reference ... 120
15.8.9.1 Product ... 120
15.8.9.2 Accessories ... 120
15.9 PNOZ yio1 2DI 2SO ... 121
15.9.1 Device features ... 121
15.9.2 Front view ... 122
15.9.3 Block diagram ... 123
15.9.4 Dimensions ... 123
15.9.5 Technical details ... 124
15.9.6 Safety characteristic data ... 127
15.9.7 Classification according to ZVEI, CB24I ... 128
15.9.8 Order reference ... 128
15.9.8.1 Product ... 128
15.9.8.2 Accessories ... 129
15.10 PNOZ yio2 2DI 3NO ... 130
15.10.1 Device features ... 130
15.10.2 Front view ... 131
15.10.3 Block diagram ... 132
15.10.4 Dimensions ... 132
15.10.5 Technical details ... 133
15.10.6 Safety characteristic data ... 137
15.10.7 Classification according to ZVEI, CB24I ... 138
15.10.8 Supplementary data ... 138
15.10.8.1 Permitted operating height ... 138
15.10.8.2 Service life graph ... 139
15.10.9 Order reference ... 140
15.10.9.1 Product ... 140
15.10.9.2 Accessories ... 140
15.11 PNOZ yio3 2DI 1SO 1SO t ... 141
15.11.1 Device features ... 141

15.11.2 Front view ... 142
15.11.3 Block diagram ... 143
15.11.4 Dimensions ... 143
15.11.5 Technical details ... 144
15.11.6 Safety characteristic data ... 147
15.11.7 Classification according to ZVEI, CB24I ... 148
15.11.8 Order reference ... 148
15.11.8.1 Product ... 148
15.11.8.2 Accessories ... 149
15.12 PNOZ yio4 2DI 3NO t ... 150
15.12.1 Device features ... 150
15.12.2 Front view ... 151
15.12.3 Block diagram ... 152
15.12.4 Dimensions ... 152
15.12.5 Technical details ... 153
15.12.6 Safety characteristic data ... 157
15.12.7 Classification according to ZVEI, CB24I ... 158
15.12.8 Supplementary data ... 158
15.12.8.1 Permitted operating height ... 158
15.12.8.2 Service life graph ... 159
15.12.9 Order reference ... 160
15.12.9.1 Product ... 160
15.12.9.2 Accessories ... 160

16 EC declaration of conformity ... 161

1 Introduction

1.1 Validity of documentation

This documentation is valid for the product Description myPNOZ. The versions from which this documentation is valid can vary from module to module and so the version is stated in the modules' data sheets.

This operating manual explains the function and operation, describes the installation and provides guidelines on how to connect the product.

1.2 Using the documentation

This document is intended for instruction. Only install and commission the product if you have read and understood this document. The document should be retained for future reference.

1.3 Third-party manufacturer licence information

The myPNOZ head modules and expansion module include Open Source software of various licences. You can receive further information in the document "Third-party manufacturer licence information myPNOZ head module" (document number 1005617) and "Third-party manufacturer licence information myPNOZ expansion module" (document number 1005618) under www.pilz.com.

1.4 Definition of symbols

Information that is particularly important is identified as follows:



DANGER!

This warning must be heeded! It warns of a hazardous situation that poses an immediate threat of serious injury and death and indicates preventive measures that can be taken.



WARNING!

This warning must be heeded! It warns of a hazardous situation that could lead to serious injury and death and indicates preventive measures that can be taken.



CAUTION!

This refers to a hazard that can lead to a less serious or minor injury plus material damage, and also provides information on preventive measures that can be taken.



NOTICE

This describes a situation in which the product or devices could be damaged and also provides information on preventive measures that can be taken. It also highlights areas within the text that are of particular importance.



INFORMATION

This gives advice on applications and provides information on special features.

2 Safety

2.1 Intended use

The modular safety relay myPNOZ provides a safety-related interruption of a safety circuit.

The modular safety relay myPNOZ meets the requirements of EN 60947-5-1 and EN 60204-1 and may be used in applications with

- Safety switches with N/C or N/O contact, such as E-STOP pushbutton or safety gate switch
- Safety switch with detection of shorts across contacts, such as light curtains
- Two-hand pushbuttons in accordance with EN 574 Type III A or III C

The following is deemed improper use in particular

- Any component, technical or electrical modification to the product,
- Use of the product outside the areas described in this document,
- Use of the product outside the technical details (see Technical details [📖 54]).



NOTICE

EMC-compliant electrical installation

The product is designed for use in an industrial environment. The product may cause interference if installed in other environments. If installed in other environments, measures should be taken to comply with the applicable standards and directives for the respective installation site with regard to interference.

2.2 Safety regulations

2.2.1 Safety assessment

Before using a device, a safety assessment in accordance with the Machinery Directive is required.

The product as an individual component fulfils the functional safety requirements in accordance with IEC 61508, EN ISO 13849 and EN 62061. However, this does not guarantee the functional safety of the overall plant/machine. To achieve the relevant safety level of the overall plant/machine's required safety functions, each safety function needs to be considered separately.

2.2.2 Use of qualified personnel

The products may only be assembled, installed, programmed, commissioned, operated, maintained and decommissioned by persons who are competent to do so.

A competent person is a qualified and knowledgeable person who, because of their training, experience and current professional activity, has the specialist knowledge required. To be able to inspect, assess and operate devices, systems and machines, the person has to be informed of the state of the art and the applicable national, European and international laws, directives and standards.

It is the company's responsibility only to employ personnel who

- Are familiar with the basic regulations concerning health and safety / accident prevention,
- Have read and understood the information provided in the section entitled Safety
- Have a good knowledge of the generic and specialist standards applicable to the specific application.

2.2.3 Warranty and liability

All claims to warranty and liability will be rendered invalid if

- The product was used contrary to the purpose for which it is intended,
- Damage can be attributed to not having followed the guidelines in the operating manual,
- Operating personnel are not suitably qualified,
- Any type of modification has been made (e.g. exchanging components on the PCB boards, soldering work etc.).

2.2.4 Disposal

- In safety-related applications, please comply with the mission time T_M in the safety-related characteristic data.
- When decommissioning, please comply with local regulations regarding the disposal of electronic devices (e.g. Electrical and Electronic Equipment Act).

3 Overview

myPNOZ is a modular safety relay, which can be used to implement various safety functions without the need for programming. A safety function can be achieved through the combination and wiring of the respective myPNOZ components. The “plug and play” principle was in the foreground during development, without compromising on safety requirements. With myPNOZ it is easy to implement safety functions up to PL e of EN ISO 13849 and SIL CL 3 of EN 62061 and SIL 3 of IEC 61508.
You create your individual myPNOZ using the web application **myPNOZ Creator**. It’s a simple process requiring no knowledge of programming. All you need to do is define the required safety functions and how they are linked.
Pilz then assembles your myPNOZ from the various modules, before setting it up and testing it.
Your myPNOZ arrives “ready-to-install”. All you need to do is install it in the control cabinet and wire it up. After testing the safety functions, myPNOZ is operational.

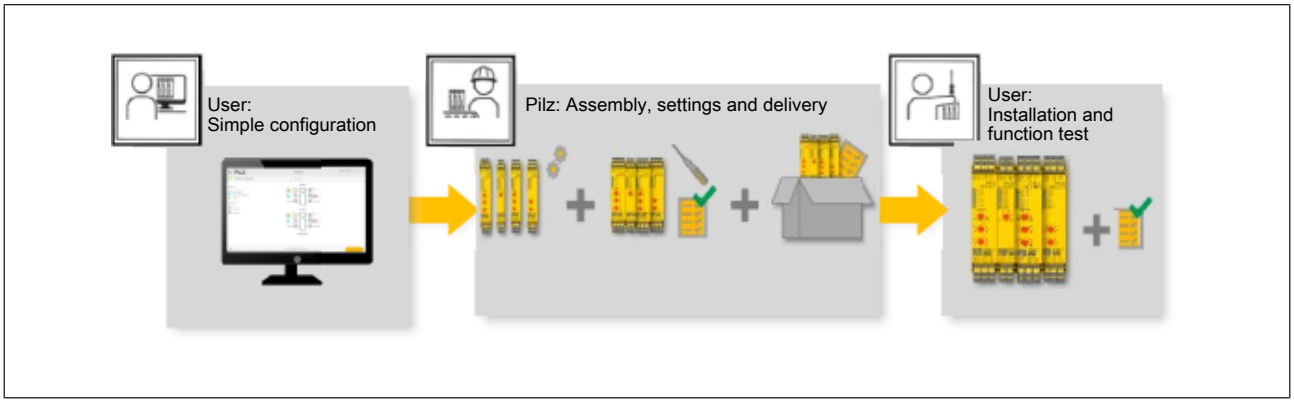

An example in the "myPNOZ Getting Started" manual describes how to configure and commission in practice a myPNOZ that has been adapted to individual requirements.

4 Structure of myPNOZ

myPNOZ is used to implement safety functions on applications with, for example:

- E-STOP pushbuttons
- Safety gate switches
- Light curtains
- Two-hand pushbuttons

myPNOZ consists of modules that are linked together via internal logic. Various applications can be implemented in this way, purely through the sequence of the modules. Rotary switches can be used to make additional settings, such as various start types for individual applications for example. The configuration, which consists of the sequence of the modules and the position of the rotary switches, is stored in the myPNOZ. The sensors and command devices connected to the inputs are monitored; incoming signals are evaluated and the outputs switched accordingly.

Properties:

- A modular safety relay myPNOZ consists of a head module and one or more expansion modules.
- Up to 8 expansion modules can be added.
- The head module and expansion modules are connected via bus connectors.
- The modules have inputs, safe outputs using relay and semiconductor technology, plus signal outputs for non-safety-related applications.
- The logic connection of the inputs and the switching of the outputs is determined by the sequence of the expansion modules, which are arranged to the right of the head module.
- Test pulse outputs enable detection of shorts across contacts.
- Rotary switches can be used to set start types, delay times and test pulse evaluation.
- The LEDs on the head module and expansion modules indicate the status of the myPNOZ and any errors.
- A rotary switch on the head module is used to save the configuration, protecting it from being changed accidentally.

Example of myPNOZ: Head module with expansion modules



Modules

The modules are described in detail in the chapters entitled Head modules [📖 51] and Expansion modules [📖 59]. The table contains an overview of the key properties.

Module	Description
Head module	
PNOZ yh1 2DI 24VDC	▸ Supply voltage for myPNOZ ▸ 1 input function to connect E-STOP pushbutton, safety gate switch or light curtain and start button ▸ 2 test pulse outputs to detect shorts across contacts ▸ 1 signal output, e.g. for display
Input modules	
PNOZ yi1 4DI	▸ 2 input functions to connect E-STOP pushbutton, safety gate switch or light curtain and start button ▸ Input functions are AND-linked
PNOZ yi2 4DI OR	▸ 2 input functions to connect safety gate switch or light curtain and start button ▸ Input functions are OR-linked

Module	Description
PNOZ yi3 2DI T3A	▸ 1 input function to connect a two-hand pushbutton (Type III A) ▸ 1 input function to connect E-STOP pushbutton, safety gate switch or light curtain and start button ▸ Input functions are AND-linked
PNOZ yi4 2DI T3C	▸ 1 input function to connect a two-hand pushbutton (Type III C) ▸ 1 input function to connect E-STOP pushbutton, safety gate switch or light curtain and start button ▸ Input functions are AND-linked
Input and output modules	
PNOZ yio1 2DI 2SO	▸ 1 input function to connect E-STOP pushbutton, safety gate switch or light curtain and start button ▸ 2 output functions, each with 1 safe semiconductor output, instantaneous, and 1 input for feedback loop ▸ Supply voltage connection for the semiconductor outputs ▸ 1 signal output, e.g. for display
PNOZ yio2 2DI 3NO	▸ 1 input function to connect E-STOP pushbutton, safety gate switch or light curtain and start button ▸ 1 output function with 3 safe relay outputs, positive-guided, instantaneous, and 1 input for feedback loop ▸ 1 signal output, e.g. for display
PNOZ yio3 2DI 1SO 1SO t	▸ 1 input function to connect E-STOP pushbutton, safety gate switch or light curtain and start button ▸ 1 output function with 1 safe semiconductor output, instantaneous, and 1 input for feedback loop ▸ 1 output function with 1 safe semiconductor output, delayed, and 1 input for feedback loop ▸ Supply voltage connection for the semiconductor outputs ▸ 1 signal output, e.g. for display
PNOZ yio4 2DI 3NO t	▸ 1 input function to connect E-STOP pushbutton, safety gate switch or light curtain and start button ▸ 1 output function with 3 safe relay outputs, positive-guided, delayed, and 1 input for feedback loop ▸ 1 signal output, e.g. for display
Output modules	
PNOZ yo1 2SO	▸ 2 output functions, each with 1 safe semiconductor output, instantaneous, and 1 input for feedback loop ▸ Supply voltage connection for the semiconductor outputs ▸ 1 signal output, e.g. for display

Module	Description
PNOZ yo2 3NO	▸ 1 safe output function with 3 safe relay outputs, positive-guided, instantaneous, and 1 input for feedback loop ▸ 1 signal output, e.g. for display
PNOZ yo3 1SO 1SO t	▸ 1 output function with 1 semiconductor output, instantaneous, and 1 input for feedback loop ▸ 1 output function with 1 semiconductor output, delayed, and 1 input for feedback loop ▸ Supply voltage connection for the semiconductor outputs ▸ 1 signal output, e.g. for display
PNOZ yo4 3NO t	▸ 1 safe output function with 3 safe relay outputs, positive-guided, delayed, and 1 input for feedback loop ▸ 1 signal output, e.g. for display

4.1 Application logic

The plug-in sequence of the expansion modules determines the logic connection of the inputs and the switching of the outputs. The plug-in sequence also enables several logic functions to be implemented, which are called zones.

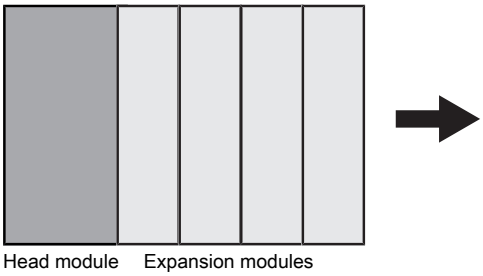

- The head module is always on the left.
- Expansion modules can be added to the right of the head module. Expansion modules provide inputs and outputs

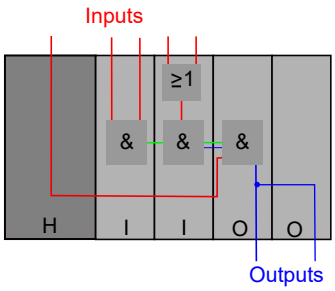

- The input (e.g. E-STOP) on the head module (H) affects all the outputs (O) on the myPNOZ and is AND-linked to the inputs on the input modules (I).
- The inputs on the input modules (I) are AND-linked and switch the subsequent outputs on the output module or modules (O).
- The inputs on the OR input module are OR-linked.
- The last module on a myPNOZ must always be an output module (O) or a combined input and output module (I/O).

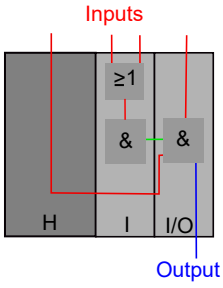

- Combined input and output modules (I/O) act like an input module followed by an output module.

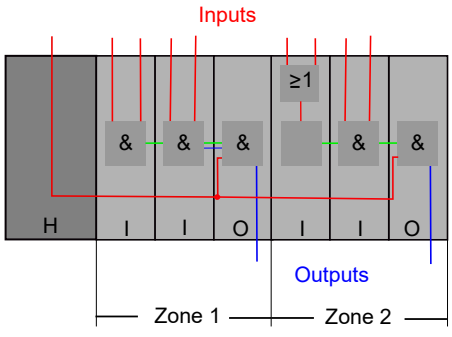

- If an output module (O) is followed by an input module (I) or an input and output module (I/O), a new zone starts. Zone 1 and Zone 2 operate independently from each other. The input (e.g. E-STOP) on the head module (H) affects the outputs (O) of both zones.

5 Configuration

The type and number of safety functions that you need and how these are linked together are the basis of the configuration. On this basis you can determine the configuration, taking the application logic into account. A much more convenient way to perform the configuration is with the web application myPNOZ Creator. The defined configuration can then be ordered directly in the E-Shop (see Configuration with myPNOZ Creator [18]).

The rotary switch ***System*** can have an adhesive seal applied so that any unauthorised changes to the saved configuration will be detected. If the adhesive seal is destroyed, the configuration has been changed.

5.1 Configuration with myPNOZ Creator

The web application myPNOZ Creator enables configuration to be carried out based on a logic plan or through the combination of modules. The web application automatically assembles an individual myPNOZ based on this configuration. It selects the required modules, defines the sequence and defines the position of the rotary switches. The result is a pre-configured myPNOZ, which can be ordered directly.



NOTICE

The safety function should be checked after initial commissioning and each time the plant/machine is changed. The safety functions may only be checked by qualified personnel.

Configuration with the web application involves 3 steps:

1. Define the safety functions that you need and determine how these safety functions are linked together.
2. Open the web application myPNOZ Creator (http://mypnoz.com/creator) and map out the safety functions and their logic connections. Alternatively you can map out the hardware configuration.
3. When you have entered your application you can download the pre-configured myPNOZ including parts list as a PDF file or place an order directly via the web application / E-Shop.

Once you've ordered you'll receive a fully configured and tested myPNOZ, which you can wire and install and then put into service directly. There is a QR code on the left-hand side of the head module so that you can change or re-order the configuration at a later date. The QR code leads you directly to your configuration in the myPNOZ Creator.

5.2 Change configuration

Expansion modules can be exchanged or expansion modules can be removed or added. The settings on the rotary switches can be changed. Always refer to the rules for the structure of the myPNOZ (see Structure of myPNOZ [13]).

Procedure:

1. Set the rotary switch ***System*** on the head module to ***Conf.*** All the outputs are switched off.

2. You can now make the following changes:
   – Exchange expansion modules or insert new expansion modules (Remove/exchange modules [📖 31])
   – Change or reset the start type (Set start type and test pulse evaluation [📖 21])
   – Change or reset the delay time (Set delay time [📖 22])
3. If you have not already done so, switch on the supply voltage.
4. Save the configuration: If the rotary switch ***System*** on the head module is set to ***Conf***, the changed configuration will automatically be saved if no changes are made for 5 s. If the set configuration is faulty, all the module LEDs will flash orange-green and the function LEDs will indicate the reason for the faulty configuration (see Diagnostics [📖 42]). The configuration was not saved. Correct the configuration and save it again.
5. Set the rotary switch ***System*** to ***Run*** and check the safety functions.



NOTICE

The safety function should be checked after initial commissioning and each time the plant/machine is changed. The safety functions may only be checked by qualified personnel.

5.3 Start types

The start types determine the condition under which the state of an input circuit is forwarded as the result of the input function. The start types are set using a rotary switch (see Set start type and test pulse evaluation [📖 21]).
The following start types are available:

- **A** Automatic start: State of the input circuit is forwarded as the result of the input function once the input circuit has been closed.

  Manual start: State of the input circuit is forwarded as the result of the input function when the input circuit and start circuit are closed.
- Monitored start with rising and falling edge: State of the input circuit is forwarded as the result of the input function when the input circuit is closed and, after the waiting time has elapsed, the start circuit is closed and re-opened.
- Monitored start with rising edge: State of the input circuit is forwarded as the result of the input function when the input circuit is closed and, after the waiting time has elapsed, the start circuit is closed.
- Start with start-up test: After the supply voltage is applied, the module checks whether the input circuit is opened and then closed again (e.g. closed safety gates are opened and then closed again). Only then is the state of the input circuit forwarded as the result of the input function. After the start-up test, the start type reacts as described under "automatic/manual start".

The following applies to all start types: The input circuit must be deactivated at least for the duration of the recovery time (see technical details Head module [📖 51] and Expansion modules [📖 59]).

5.3.1 Timing diagram for automatic and manual start

- [1]: Automatic start
- [2]: Manual start
  - a: Input circuit closes before start circuit
  - b: Start circuit closes before input circuit

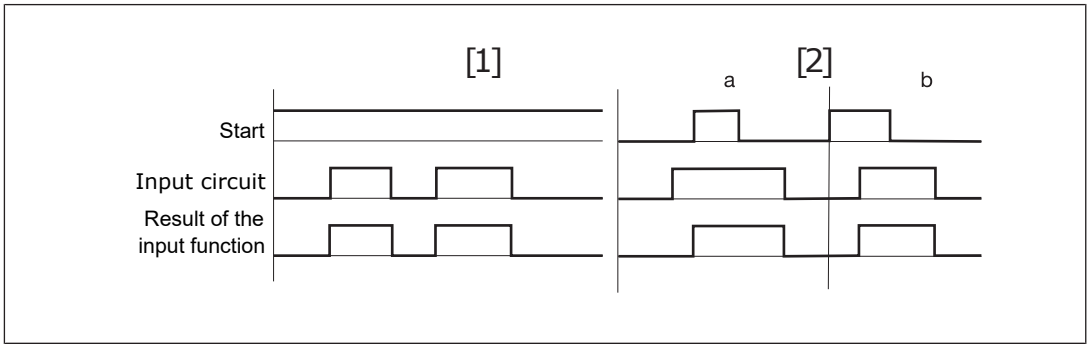

Legend

- Input circuit: State of the control or switching element on the input
- Result of the input function: Signal that is forwarded after evaluation of the start circuit and input circuit

5.3.2 Timing diagram for monitored start with rising edge

- a: Input circuit closes before start circuit
- b: Start circuit closes before input circuit

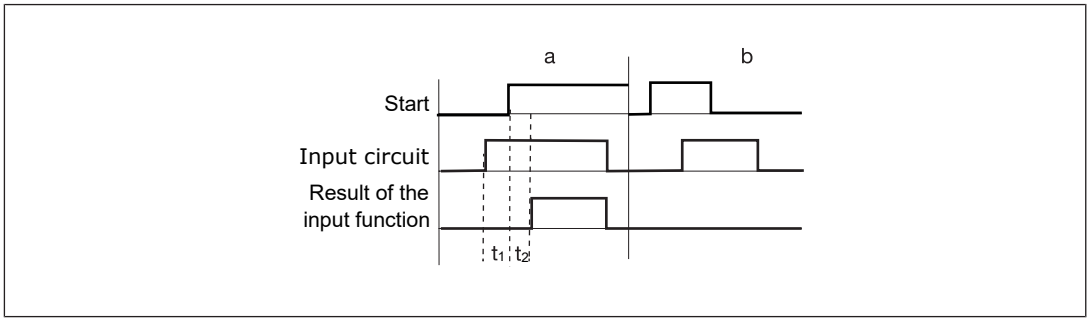

Legend

- t_1: Waiting time on monitored start (see module's technical details)
- t_2: Start pulse duration on monitored start (see module's technical details)
- Input circuit: State of the control or switching element on the input
- Result of the input function: Signal that is forwarded after evaluation of the start circuit and input circuit

5.3.3 Timing diagram for monitored start with rising and falling edge

- a: Input circuit closes before start circuit
- b: Start circuit closes before input circuit

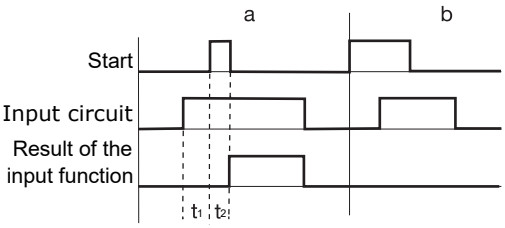

Legend

- t_1: Waiting time on monitored start (see module's technical details)
- t_2: Start pulse duration on monitored start (see module's technical details)
- Input circuit: State of the control or switching element on the input
- Result of the input function: Signal that is forwarded after evaluation of the start circuit and input circuit

5.3.4 Timing diagram for start with start-up test

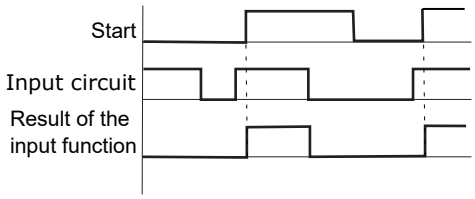

Legend

- Input circuit: State of the control or switching element on the input
- Result of the input function: Signal that is forwarded after evaluation of the start circuit and input circuit

5.4 Set start type and test pulse evaluation

The start type is set on the rotary switch ***mode*** of the head module or expansion module. The setting options are explained under Start types [📖 19].

Procedure:

- If you wish to change the start type of a configured myPNOZ that is already in operation, first set the rotary switch ***System*** on the head module to ***Conf***.
- Use the rotary switch ***mode*** to set the required start type.

Rotary switch ***mode***	Automatic or manual start	Monitored start, rising edge	Monitored start, rising and falling edge	Automatic start with start-up test
Without test pulse evaluation				
With test pulse evaluation				

- Save the setting: If the rotary switch ***System*** is set to ***Conf***, the changed setting will automatically be saved if no changes are made for 5 s.
- myPNOZ can be restarted. To do this, set the rotary switch ***System*** to ***Run.***

5.5 Delay times

The safe outputs on some expansion modules (see Structure of myPNOZ [14]) can be switched on or off with a delay. The delay time is set via 2 rotary switches:

- The rotary switch ***t[s]*** is used to set a time value.
- The rotary switch ***n*** is used to set a factor, which is multiplied by the time value; select between an on delay or an off delay.
- For selectable delay times see Set delay time [22]

INFORMATION

The overall time required to switch an output results from:
Reaction time (Reaction times [25]) + delay time + 1.5 % tolerance of the delay time

INFORMATION

The delay time during switch-off cannot be guaranteed, as in case of an error there is an instantaneous switch-off.

5.6 Set delay time

The delay time of the safe outputs is set using the rotary switches ***t[s]*** and ***n*** on the expansion module. The delay time is the result of multiplying the set time value ***t[s]*** by the set factor ***n.***

The rotary switch ***n*** is also used to select between an on delay (t_{on} range) and an off delay (t_{off} range).

Procedure:

- If you wish to change the delay type of a configured myPNOZ that is already in operation, first set the rotary switch ***System*** on the head module to ***Conf***.

- Use the rotary switch ***t[s]*** to set the required time value.
- Use the rotary switch ***n*** to set the required factor and select between an on delay or an off delay.
- Save the setting: If the rotary switch ***System*** is set to ***Conf***, the setting will automatically be saved if no changes are made for 5 s.
- myPNOZ can be restarted. To do this, set the rotary switch ***System*** to ***Run.***

Examples:

- Required off delay: 20 s
  - Settings:

    t[s] = 2.5 s,

    n = 8 (t_{off})

    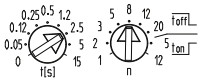

  - Calculation of delay time = 2.5 s x 8 = 20 s
- Required on delay: 6 s
  - Settings:

    t[s] = 1.2 s,

    n = 5 (t_{on})

    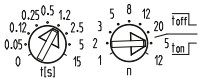

  - Calculation of delay time = 1.2 s x 5 = 6 s

Selectable delay times:

Off delay t_{off} [seconds]

Time t[s]	Factor n						
	1	**2**	**3**	**5**	**8**	**12**	**20**
0	0 s	0 s	0 s	0 s	0 s	0 s	0 s
0.05	0.05 s	0.1 s	0.15 s	0.25 s	0.4 s	0.6 s	1 s
0.12	0.12 s	0.24 s	0.36 s	0.6 s	0.96 s	1.44 s	2.4 s
0.25	0.25 s	0.5 s	0.75 s	1.25 s	2 s	3 s	5 s
0.5	0.5 s	1 s	1.5 s	2.5 s	4 s	6 s	10 s
1.2	1.2 s	2.4 s	3.6 s	6 s	9.6 s	14.4 s	24 s
2.5	2.5 s	5 s	7.5 s	12.5 s	20 s	30 s	50 s
5	5 s	10 s	15 s	25 s	40 s	60 s	100 s
15	15 s	30 s	45 s	75 s	120 s	180 s	300 s

On delay t_{on} [seconds]

Time t[s]	Factor n	
	5	**12**
0	0 s	0 s
0.05	0.25 s	0.6 s
0.12	0.6 s	1.44 s
0.25	1.25 s	3 s
0.5	2.5 s	6 s
1.2	6 s	14.4 s
2.5	12.5 s	30 s
5	25 s	60 s
15	75 s	180 s

6 Reaction times

If the state at an input is changed, e.g. an E-STOP pushbutton is operated, it takes a certain time for the signal to arrive at the output and the output to switch. This time is the reaction time. The reaction time is due to internal processing times and delay times caused by the components. Different reaction times occur, depending on the type of the output and the state change at the input. The number of modules also influences the reaction time.

Reaction time of a safe relay output

The time needed for a relay output to switch off or on when the state at the input changes

Number of expansion modules	Max. reaction time when switching off	Max. reaction time when switching off in the event of an internal error	Typ. reaction time when switching off	Max. reaction time when switching on
1	32.5 ms	37.6 ms	9.8 ms	57 ms
2	32.5 ms	37.6 ms	9.8 ms	57 ms
3	32.5 ms	37.6 ms	9.8 ms	57 ms
4	32.5 ms	37.6 ms	9.8 ms	57 ms
5	33.1 ms	38.2 ms	10.2 ms	58.5 ms
6	33.5 ms	38.6 ms	10.5 ms	59.5 ms
7	34 ms	39 ms	10.8 ms	60.5 ms
8	34.4 ms	39.4 ms	11.1 ms	61.6 ms

Reaction time of a safe semiconductor output

The time needed for a semiconductor output to switch off or on when the state at the input changes

Number of expansion modules	Max. reaction time when switching off	Max. reaction time when switching off in the event of an internal error	Typ. reaction time when switching off	Max. reaction time when switching on
1	6.1 ms	14.3 ms	3.8 ms	34.3 ms
2	6.1 ms	14.3 ms	3.8 ms	34.3 ms
3	6.1 ms	14.3 ms	3.8 ms	34.3 ms
4	6.1 ms	14.3 ms	3.8 ms	34.3 ms
5	6.8 ms	14.9 ms	4.3 ms	35.8 ms
6	7.2 ms	15.3 ms	4.6 ms	36.8 ms
7	7.6 ms	15.7 ms	4.9 ms	37.8 ms
8	8 ms	16.1 ms	5.2 ms	38.8 ms

Reaction time of a signal output (not safety-related)

The time needed for a signal output to switch off or on when the state at the input changes

Number of expansion modules	Max. reaction time when switching off	Typ. reaction time when switching off	Max. reaction time when switching on
1	7.2 ms	4,3 ms	32.6 ms
2	7.2 ms	4,3 ms	32.6 ms
3	7.2 ms	4,3 ms	32.6 ms
4	7.2 ms	4,3 ms	32.6 ms
5	7.8 ms	4,7 ms	34.2 ms
6	8.2 ms	5 ms	35.2 ms
7	8.6 ms	5,3 ms	36.2 ms
8	9 ms	5,6 ms	37.2 ms

7 Consideration of the safety-related characteristic data

The safety-related characteristic values of the input, logic and output must always be taken into account for calculating the safety-related characteristic data of a safety function on the myPNOZ. The safety-related characteristic data of the connected sensors and actuators must also be taken into account. They are not considered here, as they depend on the respective application.

- All inputs of the same type have identical safety-related characteristic data.
- All outputs of the same type have identical safety-related characteristic data.
- The head module specifies the safety-related characteristic data of the logic.
- The input on the head module is evaluated as any other input of the same type.
- Each safety function is considered separately.
- A module's position has no influence on the safety-related characteristic data

Examples:

The safety level of a safety function on the myPNOZ is always the result of the values for input + logic + output, irrespective of the position of the modules. If all the inputs and outputs shown in the examples were of the same type, then the safety level of the safety function for all examples would also be identical.

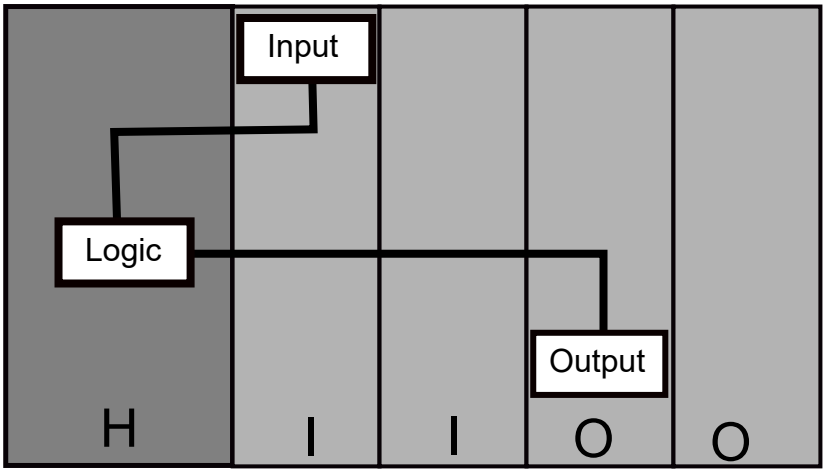

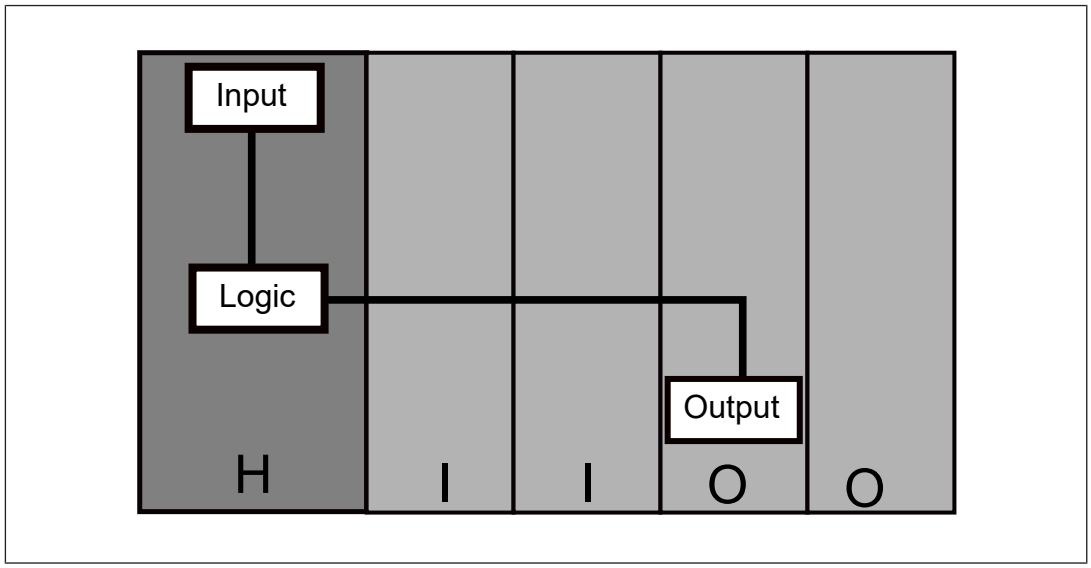
Input
Logic
Output
H
I
I
O
O

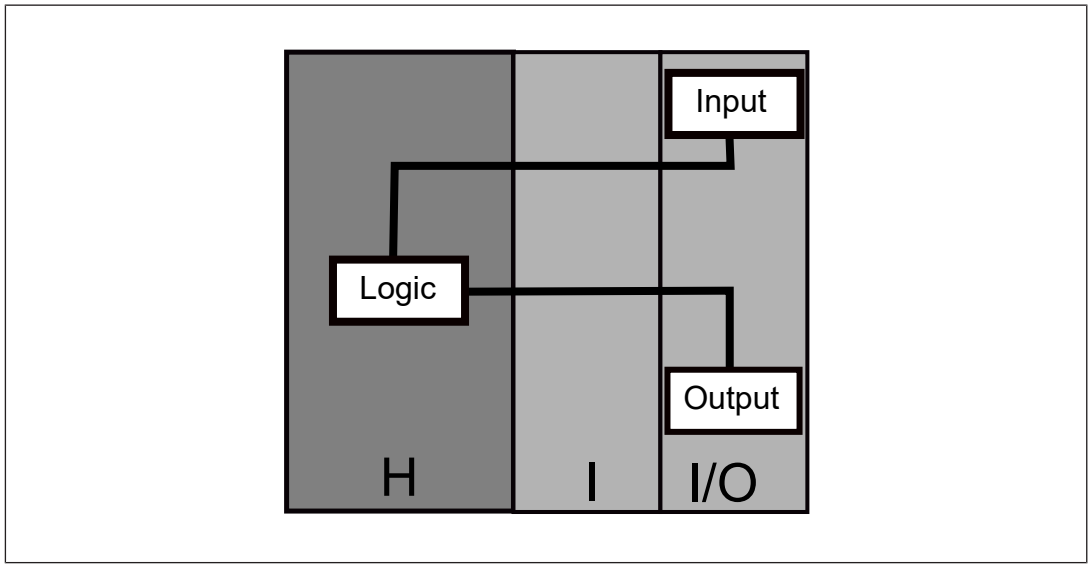
Input
Logic
Output
H
I
I/O

8 Installation and removal

To install a myPNOZ, first connect the modules together (see Connect modules [📖 30]). myPNOZ can then be installed on the mounting rail in the control cabinet (see Install myPNOZ on the mounting rail [📖 31]. Please note the dimensions.

If a myPNOZ is already installed on the mounting rail, individual modules can be removed, exchanged or added without removing the remaining modules (see Remove/exchange modules [📖 31]).
The position of the expansion modules arranged to the right of the head module determines the logic connection of the inputs and the switching of the outputs (see Application logic [📖 17]).

Please refer to the section entitled Structure of myPNOZ [📖 13] for details of the number of modules and module types that can be connected.

During installation and removal please note:



CAUTION!

Only install modules when the supply voltage is switched off.



NOTICE

Damage due to electrostatic discharge!

Electrostatic discharge can damage components. Ensure against discharge before touching the product, e.g. by touching an earthed, conductive surface or by wearing an earthed armband.

8.1 Connect modules

Prerequisites

- The plug-in terminals on the modules are removed (see Remove plug-in terminals [32]).

Procedure

- From above, push the module to be connected into the rail of the adjacent left-hand module.



- Connect the modules using the bus connectors provided.

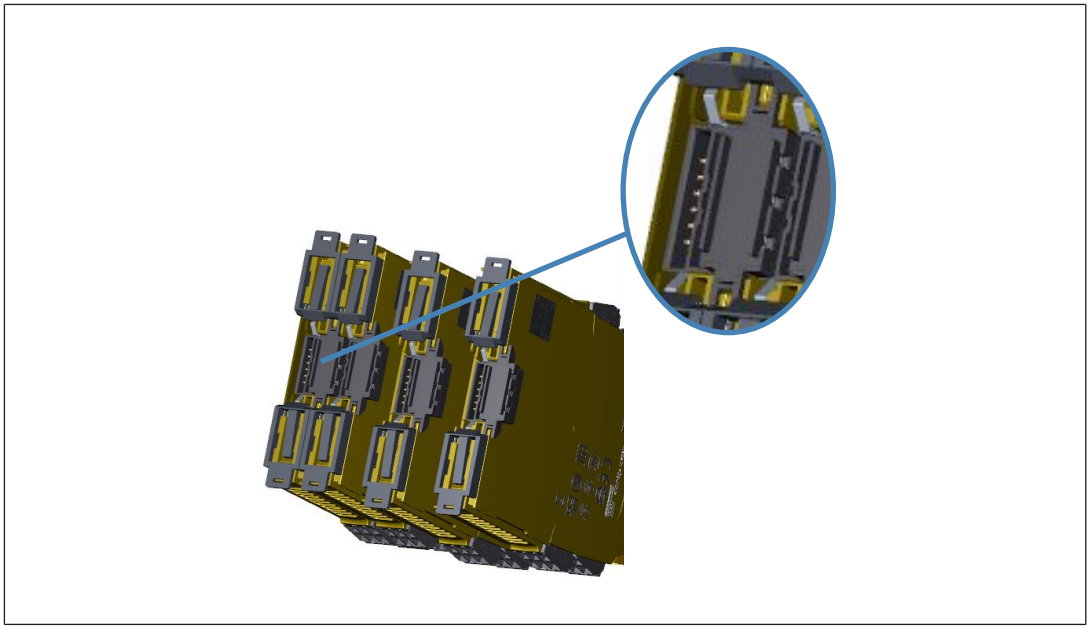

8.2 Install myPNOZ on the mounting rail

Prerequisites

- Modules are connected.
- The control cabinet must be at least protection type IP54.

Procedure

- Open the locking slides on the back of the modules

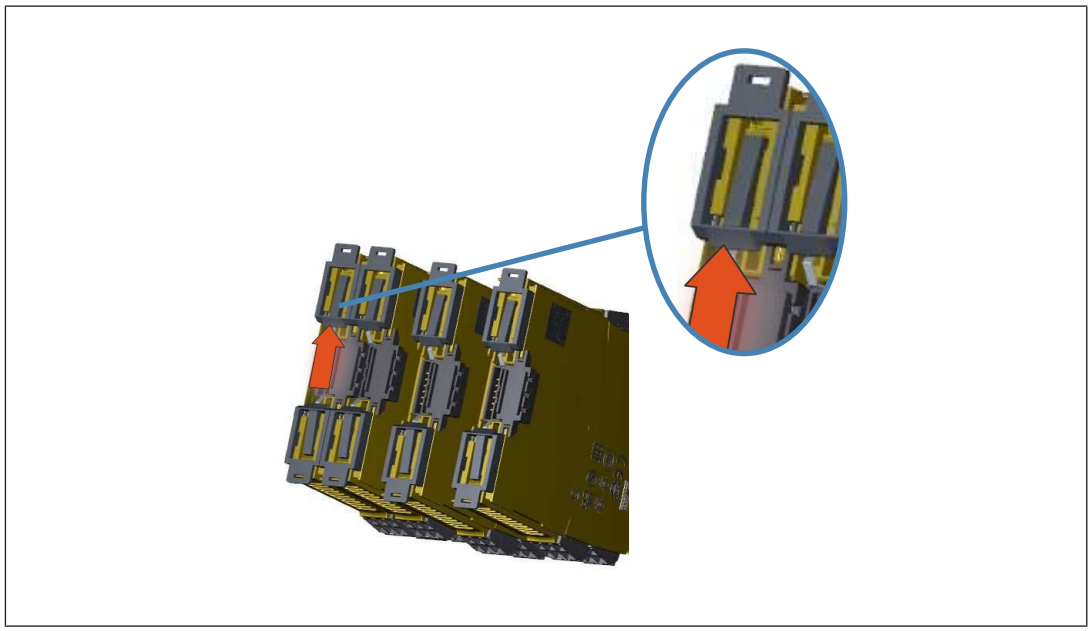

- Place the modules on the mounting rail and attach them to the mounting rail using the locking slides.
- Install fixing element

  When installed vertically or in environments exposed to heavy vibration, myPNOZ should be secured using a fixing element (e.g. retaining bracket or end angle).

8.3 Remove/exchange modules

You can remove or exchange the complete myPNOZ or individual modules.

Prerequisites

- Plug-in terminals must be removed (see Remove plug-in terminals [📖 32])
  - – on the module that is to be removed
  - – on the adjacent left-hand module

Procedure

- Open the locking slides on the back of the modules to be removed.
- Lift the module from the mounting rail.

8.4 Remove plug-in terminals

Procedure: Insert the screwdriver into the housing recess behind the terminal and lever the terminal out.

Do **not** remove the terminals by pulling the cables!



8.5 Mounting distances

With control cabinet installation it is essential to maintain a certain distance from the top and bottom, as well as to other heat-producing devices (see diagram). The values stated for the mounting distances are minimum specifications.

The ambient temperature in the control cabinet must not exceed the figure stated in the technical details. Air conditioning may otherwise be required.

Mounting distances:

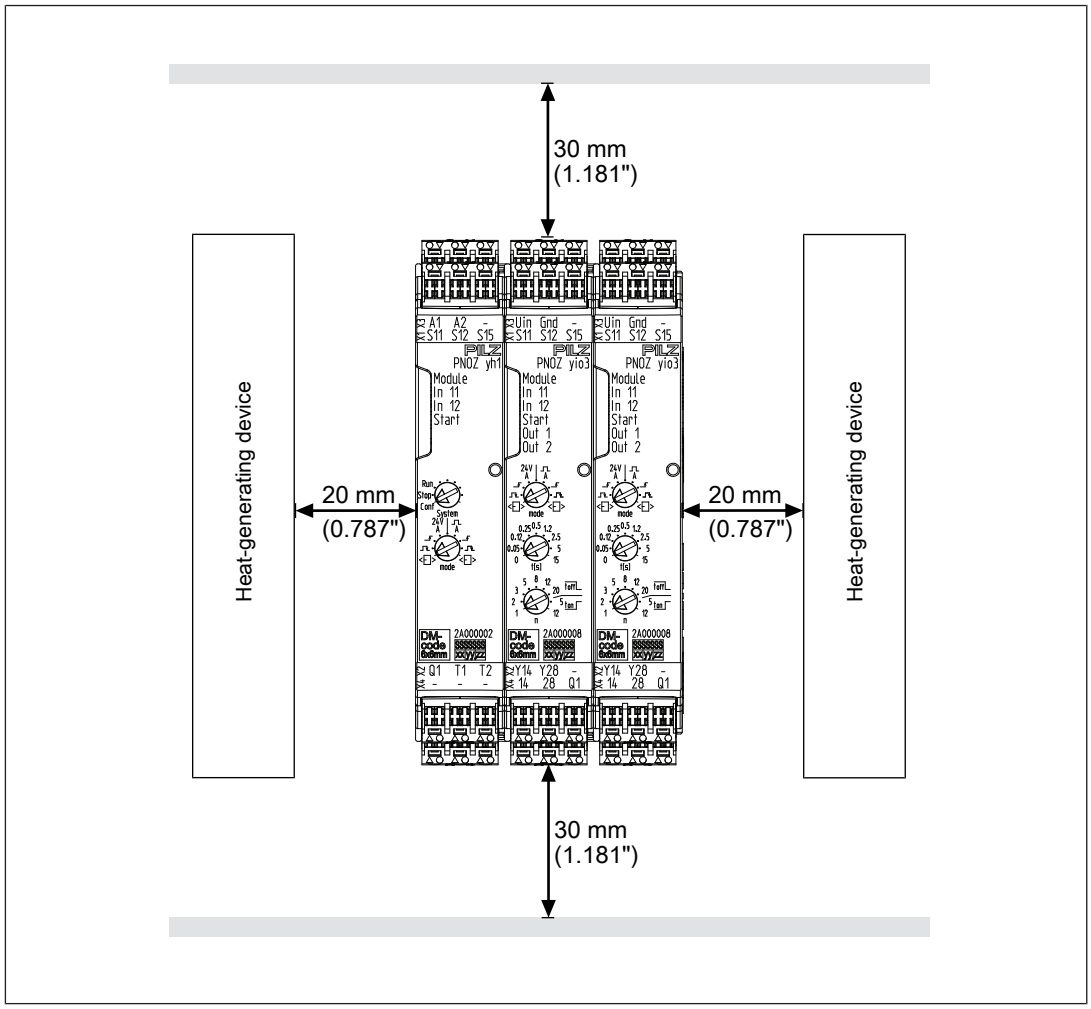

9 Wiring

The function and description of inputs and outputs of the same type are identical on all modules. Any special features are described with the individual connections. The technical properties can be found with the respective modules (see Head modules [📖 51] and Expansion modules [📖 59])

Please note:

- It is essential to comply with the modules' technical details.
- Test pulse outputs must exclusively be used to test the inputs. They must not be used to drive loads.

NOTICE

Do not route the test pulse cables together with actuator cables within an unprotected sheathed cable.

- To prevent EMC interferences (particularly common-mode interferences) the measures described in EN 60204-1 must be executed. This includes the separate routing of cables of the control circuits (input, start and feedback loop) from other cables for energy transmission or the shielding of cables, for example.
- Use copper wiring with a temperature stability of 60/75 °C.
- Use ferrules to connect multicore cables.

9.1 Connect the supply voltage

The head module and the expansion modules with safe semiconductor outputs can be supplied via one or more power supplies.

Please note when selecting the power supply:

- The power supply must meet the regulations for extra low voltages with protective electrical separation (SELV, PELV).
- Output of external power supply: to calculate the total output of the external power supply, add the information from the technical details for the head module and connected expansion modules.

Procedure:

Head module	Expansion module with semiconductor output
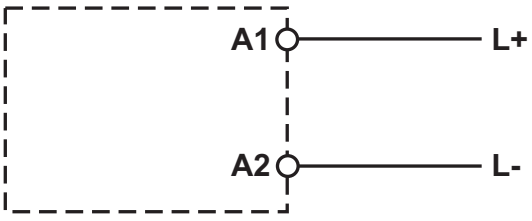	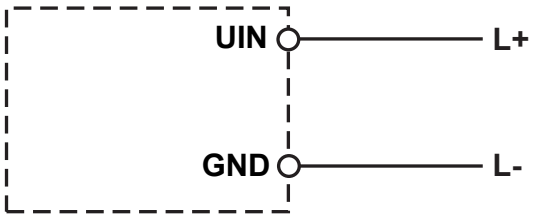

NOTICE

If the head module and the expansion module are supplied from different power supplies, then the A2 connection and GND on the myPNOZ must be connected.

9.2 Connect control or switching elements to the inputs

The control or switching elements trigger the switching of the outputs. The wiring of the control and switching elements is based on the application and required safety level.

Please note

- Connect test pulse outputs to the control or switching elements in order to detect shorts across contacts.
- Only use the control and switching elements that are intended for the respective module (see Head modules [📖 51] and Expansion modules [📖 59])

Prerequisites:

- You have carried out a risk analysis, determined the safety level and defined the conditions for the wiring (e.g. detection of shorts across contacts required, 1-ch. or 2-ch.)

Procedure:

Control/switching element	Single-channel	Dual-channel
E-STOP without test pulse evaluation	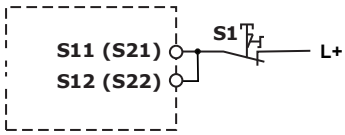	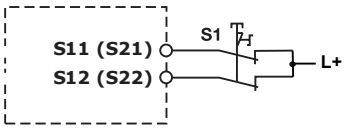
E-STOP with test pulse evaluation ▸ Head module ▸ Head module and expansion module		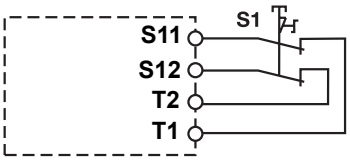 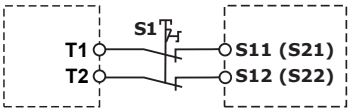
Safety gate switch without test pulse evaluation	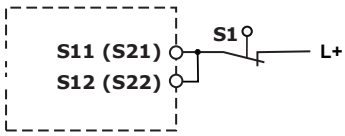	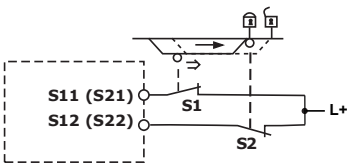

Safety gate switch with test pulse evaluation ▸ Head module ▸ Head module and expansion module		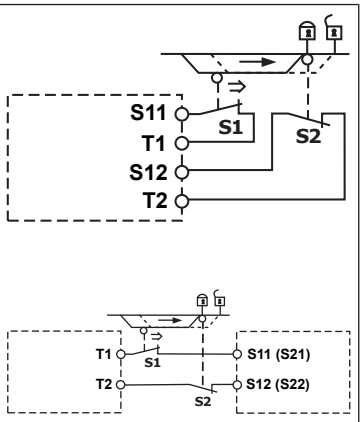
ESPE, test pulse evaluation through ESPE (OSSD)		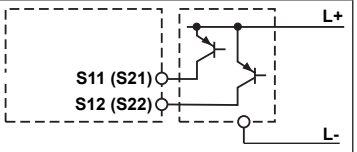
Two-hand type III A		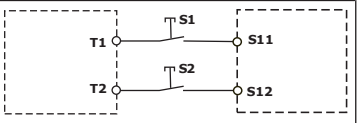
Two-hand type III C		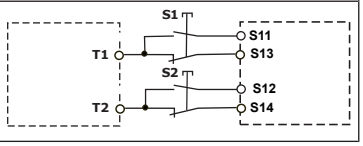

Legend

- S1/S2: E-STOP / safety gate switch, light curtain or two-hand pushbutton
- ⇑: Operated element
- : Gate open
- : Gate closed

9.3 Connect start button

A start button prevents a module from restarting automatically. The start type is defined using the operating mode selector switch ***mode***.

Prerequisites:

- You have carried out a risk analysis, determined the safety level and defined the conditions for the wiring (e.g. start-up test required).

Procedure:

Start type	Automatic/automatic with start-up test	Manual/monitored
	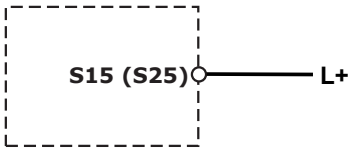	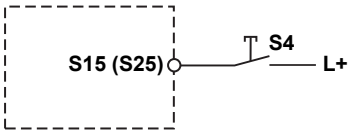

Legend

- S4: Start button

9.4 Wire outputs

The wiring of the relay outputs and semiconductor outputs can be single or redundant.

Please note

- Protect the relay outputs from short circuit with an external blow-out fuse.
- To monitor external contactors and relays, a module's instantaneous and delayed outputs can be connected to feedback loops (see Connect feedback loop [📖 38]).

NOTICE

If you wish to achieve SIL CL3 of EN 62061, PL e of EN ISO 13849 with a semiconductor output, you will need to use appropriate wiring to exclude shorts across contacts. The connected actuators must have a guaranteed dropout voltage of at least 2.4 V or actuators must be used that are certified to EN60947-4-1 with at least 24 V rated voltage.

2 loads (e.g. contactor, relay) may be connected to an output for SIL CL 3/ PL e applications under the following conditions:

- Short across contact and external supply are excluded (e.g. through separate sheathed cables).

Please note that, in the event of an error on the connected loads or in the feedback loop, myPNOZ switches to a safe state and shuts down all the outputs.

- Sufficient fuse protection must be provided on all outputs with capacitive and inductive loads.

- Do **not** use signal output Q1 for safe circuits. The signal output reacts like the safe output and can be used for display, for example.

Prerequisites:

- You have carried out a risk analysis, determined the safety level and defined the conditions for the wiring.

Procedure:

Outputs	Single	Redundant
Relay outputs (example wiring of 17-27 and 18-28)	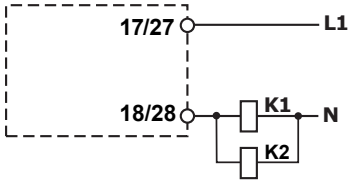	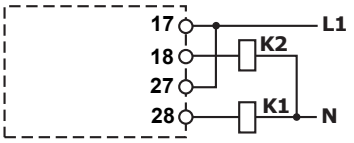
Semiconductor outputs	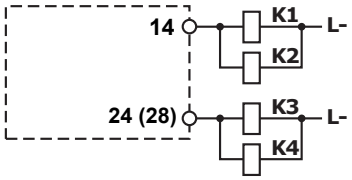	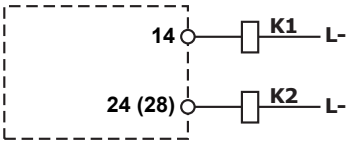

Legend

- K1/K2/K3/K4: Relay or contactor

9.5 Connect feedback loop

The feedback loops are used to monitor external contactors or relays. The N/C contacts incorporated into the feedback loop must be closed before starting. If the N/C contact is open, the connected plant or machine cannot be restarted.

Please note

- If feedback loop monitoring is not required, the feedback loop inputs must be connected to 24 VDC.
- On modules with multiple feedback loops, the assignment of the outputs to the feedback loops can be recognised by the name: the name of the feedback loop starts with a “Y”, followed by the two digits of the assigned output.

Prerequisites:

- You have carried out a risk analysis, determined the safety level and defined the conditions for the wiring.

Procedure:

Feedback loop	Active	Inactive
Relay outputs	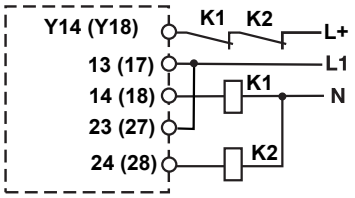	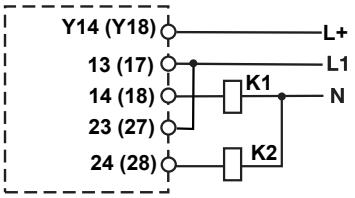
Semiconductor outputs	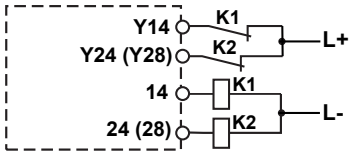	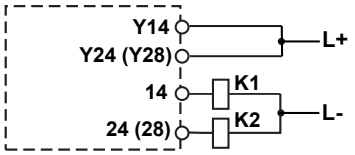

Legend

- K1/K2: Relay or contactor with N/C contacts

10 Commissioning

Prerequisites:

- myPNOZ is configured and the configuration has been saved.
- myPNOZ is installed and wired correctly.

Procedure:

1. Switch on the supply voltage.
2. Move the rotary switch ***System*** to the ***Run*** position.

myPNOZ runs through an initialisation phase. It carried out self checks, establishes the connection between the modules and tests the configuration. The ***Module*** LED on the head module flashes green. Once initialisation is completed successfully, myPNOZ goes into operation and switches all the outputs in accordance with the configured logic. The ***Module*** LEDs light up green. Potential status and error messages can be found under Diagnostics [📖 42].



NOTICE

The safety function should be checked after initial commissioning and each time the plant/machine is changed. The safety functions may only be checked by qualified personnel.

11 Operation

In operation, myPNOZ checks the input states cyclically and switches the outputs in accordance with the configured logic. The ***Module*** LEDs light up green. The meaning of all the LEDs can be found under Diagnostics [📖 42].

If there is an error, such as increased temperature or a low supply voltage for example, the ***Module*** LED lights up orange instead of green. The colour change from green to orange is a warning. myPNOZ remains operational. Only if there is an inadmissible deviation of temperature or supply voltage is an error triggered and all the outputs switched off.

myPNOZ may be in one of the following states:

- Initialisation: After supply voltage is switched on, myPNOZ runs through an initialisation phase.
- RUN: Normal operation, all outputs react to the states of the inputs in accordance with the saved configuration. The rotary switch ***System*** is in the ***Run*** position.
- STOP: The states at the inputs are not processed, all safe outputs are switched off. This state occurs when errors in the Error category or configuration errors occur or when the rotary switch ***System*** is no longer in the ***Run*** position. Errors in the Error category cannot be rectified (see Error messages [📖 49]). In the event of a configuration error, set the rotary switch ***System*** to the ***Stop*** position and rectify the error. To return to a RUN state, the rotary switch ***System*** must be set to ***Run*** or the supply voltage switched off and on again.



NOTICE

The safety function should be checked after initial commissioning and each time the plant/machine is changed. The safety functions may only be checked by qualified personnel.

12 Diagnostics

The LEDs on the head module and expansion modules indicate the status of the modules and report on operating states as well as external and internal errors. The ***Module*** LED indicates the status of the module; the function LEDs (In, Out, Start) indicate the status of the inputs and outputs.

Legend

- LED off
- LED on
- LED flashes in one colour (500 ms on, 500 ms off)
- LED flashes in two colours (500 ms in colour 1, 500 ms in colour 2)
- LED flashes inversely in one colour (LED 1: 500 ms off, 500 ms on, LED 2: 500 ms on, 500 ms off)
- LED flashes quickly (50 ms on, 950 ms off)

12.1 Status messages

These messages provide information about the status of the myPNOZ and the inputs/outputs.

Status messages during initialisation

After the myPNOZ is started there is a brief initialisation phase.

Module LED	Function LED	Meaning
Quickly flashes green	All LEDs off	Initialisation

Status messages during operation (RUN)

During operation, where there are no errors present, the states of the inputs and outputs are displayed. The Module LED light up green. If the colour of the Module LED turns orange, this is a warning about one of the following errors:

- Supply voltage increased or low
- Supply voltage to semiconductor outputs increased or low
- Temperature increased or low
- Connection between modules disturbed by external influences

myPNOZ only switches to an error state when the error means that a limit value is exceeded. If the error is no longer present, the Module LED switches back to green.

Module LED	Function LED	Meaning
 Lights up green (orange)	 Input LED lights up green	Input active
	 Input LED off	Input inactive
	 Input LED flashes green (both)	Both LEDs flash alternately: ▸ Only one input was operated (partial operation) ▸ Only one input was deactivated ▸ With two-hand control: simultaneity not maintained ▸ Two-hand operated, however start conditions are not met (e.g. E-STOP pushbutton operated or switch-off delay active)
	 Start LED lights up green	Start input active
	 Start LED off	Start input inactive
	 Start LED flashes green	▸ Application can be started, waiting for start signal ▸ When starting with start-up test: Start-up test not performed yet
	 Output LED lights up green	Output active
	 Output LED off	Output inactive

Status indicator in STOP state

If myPNOZ is in a STOP state, the states of the inputs and outputs are displayed. All the module LEDs in one zone flash identically. The module LEDs in the following zone flash inversely.

If an error occurs, the module LED switches its colour from green to orange. Errors may be:

- Supply voltage increased or low
- Supply voltage to semiconductor outputs increased or low

- Temperature increased or low

If the error is no longer present, the LED switches back to green. If the error means that a limit value is exceeded, myPNOZ switches to an error state.

Module LED	Function LED	Meaning
 Flashes green (orange)	 Input LED lights up green	Input active
	 Input LED off	Input inactive
	 Start LED lights up green	Start input active
	 Start LED off	Start input inactive
	 Output LED lights up green	Output active (delay time not yet elapsed)
	 Output LED off	Output inactive

12.2 Error messages

The Module LED on the affected module displays various types of error messages. The function LEDs provide additional information about the cause of the error. If an error occurs on the head module, then all modules are affected by the error. If the error occurs on an expansion module, then only the zone to which the expansion module belongs is affected.

“Error” error messages

“Error” type error messages are mostly wiring errors or errors based on a failure to comply with the technical details. In the event of this type of error

- All safe outputs are switched off within the reaction time
- All delayed safe outputs are switched off once the delay time has elapsed
- The safe outputs that are affected by the error are switched off immediately
- All signal outputs are switched off within the reaction time

Once the error has been rectified, the rotary switch ***System*** must be set first to ***Stop*** and then to ***Run*** or the supply voltage must be switched off and on again.

Module LED	Function LED	Meaning	Remedy
 Flashes red	 All LEDs off	LED on the head module flashes red: – Supply voltage on the head module > 28.8V – Supply voltage on the head module < 19.2V – Rotary switch ***System*** in invalid intermediate position LED flashes red: – Temperature too high or too low	Keep within the permitted supply voltage range (see module's technical details) Correct the position of the rotary switch Keep within the temperature range (see module's technical details)
 Flashes red	 Input LED lights up green	Input active	
 Flashes red	 Input LED off	Input inactive	
 Flashes red	 Input1 LED flashes green	Test pulse T1 not detected at the input	Check the test pulse wiring for short circuits to 24 VDC and to other test pulses; rectify error
 Flashes red	 Input2 LED flashes green	Test pulse T2 not detected at the input	Check the test pulse wiring for short circuits to 24 VDC and to other test pulses, rectify error
 Flashes red	 Start LED lights up green	Start input is active	
 Flashes red	 Start LED off	Start input inactive	

Module LED	Function LED	Meaning	Remedy
 Flashes red	 Output LED lights up green	Output active (delay time not yet elapsed)	
 Flashes red	 Output LED off	Output inactive	
 Flashes red	 Output LED flashes green	Error at the output ▸ Output LED flashes (or both LEDs flash simultaneously) – Feedback loop is not closed when starting or attempting to switch on – Output is switched off, but there is still voltage at the output ▸ Both LEDs flash alternately – Total current at the semiconductor outputs of an I/O module too high – Supply voltage at the semiconductor output of an I/O module too high – Total current at the semiconductor outputs of an I/O module briefly very high – Short circuit between two semiconductor outputs on a module – Short circuit between semiconductor output and GND	– Check wiring of feedback loop, rectify error – Check wiring of output for short circuits, rectify error – Keep within the permitted supply voltage range (see module's technical details) – Rectify short circuit – Rectify short circuit

Configuration error messages

myPNOZ regularly checks the configuration. If any deviation from the saved configuration is established, myPNOZ signals a configuration error. Configuration errors generally arise due to an unsaved configuration. For example, the position of a rotary switch was changed, but the configuration was not saved afterwards. In the event of this type of error

- All safe outputs are switched off
- All signal outputs are switched off

Once a configuration error has been rectified, the configuration must be re-saved and then the rotary switch ***System*** set to ***Run*** (see Change configuration [18]). If the position of a rotary switch was changed accidentally, the position of the rotary switch must be corrected. It is not necessary to save the configuration again.

Module LED	Function LED	Meaning	Remedy
 Flashing orange green	 All LEDs off	When the configuration is saved: – Module saved in the configuration, but not available	– Check that all modules are inserted in the right sequence – Check whether modules are indicating a communication error (Module LED flashes red-orange) – If the required configuration is set, save this configuration
		Saving of the current configuration failed	Save configuration
 Flashing orange green	 All LEDs on a module are quickly flashing green	When the configuration is saved: – Module type does not match the saved configuration – More modules than saved in the configuration	– Check that all modules are inserted in the right sequence – Set the required configuration and save it
		When saving of the current configuration has failed: – Last module without output	– Check if there is a module with an output at the last position – Check whether modules are indicating a communication error (Module LED flashes red-orange)
		– Head module does not recognise the module type of the expansion module	– Check whether there are more than eight expansion modules
		– More than eight expansion modules	– Check the compatibility of the firmware versions (see data sheets)
		– Firmware version of head module and expansion module not compatible	

Module LED	Function LED	Meaning	Remedy
 Flashing orange green	 A module's input LEDs are flashing green (both)	Configuration error at the input When the configuration is saved: – Position of the rotary switch ***mode*** does not match the saved configuration When saving of the current configuration has failed: – The rotary switch ***mode*** position is in an invalid intermediate position	Check the position of the rotary switch, configure the position and save the configuration – Check the position of the rotary switch and correct the position
 Flashing orange green	 Output LED on a module is flashing green	Configuration error at the output: – Position of the rotary switch ***n*** does not match the saved configuration – Position of the rotary switch ***t[s]*** does not match the saved configuration When saving of the current configuration has failed: – Rotary switch ***n*** or ***t[s]*** is in an intermediate position, which is not permitted	Check the position of the rotary switches, configure the position and save the configuration – Check the position of the rotary switch and correct the position

"Internal error" error message

If this error occurs

- All safe outputs are switched off
- All signal outputs are switched off
- Communication is interrupted and subsequent modules indicate a communication error

This error cannot be rectified. Please exchange the affected module or contact Pilz.

Module LED	Function LED	Meaning	Remedy
 Lights up red	 All LEDs off	Internal error	Exchange module or contact Pilz

Communication error message

Communication errors occur when communication between the head module and expansion module is disrupted. In the event of this type of error

- All safe outputs are switched off

- All signal outputs are switched off

Once the connection is stable again and no further errors are present, myPNOZ switches to a STOP state. The rotary switch ***System*** must first be set to ***Stop*** and then to ***Run***.

Module LED	Function LED	Meaning	Remedy
 Flashes red-orange	 All LEDs off	No connection to the head module	Check whether the bus connectors are firmly inserted between the modules

12.3 Errors on the safe outputs

- Malfunctions of the relay contacts: if the contacts have welded, reactivation will not be possible after the input circuit has opened.
- In the case of an error, the delayed outputs may open before the delay time has elapsed.

13 Maintenance and testing

It is not necessary to perform maintenance work on the product in normal operation. Please return any faulty products to Pilz.

13.1 Function test of the relay outputs

When the relay outputs are switched on, the mechanical contact on the relay cannot be tested automatically. Depending on the operational environment, measures to detect the non-opening of switching elements may be required under some circumstances.

When the product is used in accordance with the European Machinery Directive, a check must be carried out to ensure that the safety contacts on the relay outputs open correctly. Start the device again or open the safety contacts (switch off output), so that the internal diagnostics can check the correct opening of the safety contacts

- for SIL CL 3/PL e at least 1x per month
- for SIL CL 2/PL d at least 1x per year

14 Head modules

14.1 PNOZ yh1 2DI 24VDC

14.1.1 Device features

- Head module for safe applications of the myPNOZ
- Saving of the configuration
- Communication with expansion modules
- Supply voltage for myPNOZ
- 1 input function to connect E-STOP pushbutton, safety gate switch or light curtain and start button
- Start type can be set via rotary switch
- 2 test pulse outputs to detect shorts across contacts
- 1 signal output, e.g. for display
- LED display for:
  - Module status
  - State of the inputs
  - State of the start input

14.1.2 Front view

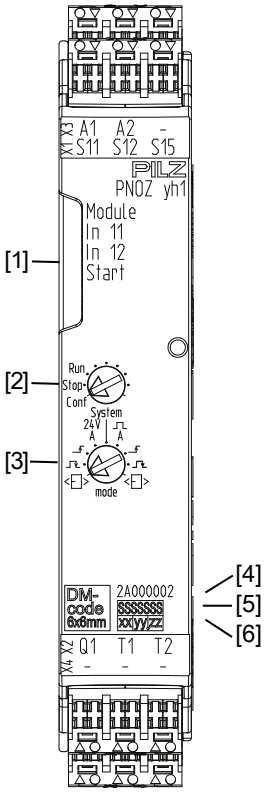

Legend

[1] LEDs for diagnostics

[2] Rotary switch for configuration and operating states

[3] Rotary switch for start types and test pulse evaluation (S11, S12)

[4] Order number

[5] Serial number

[6] Device version

14.1.3 Block diagram

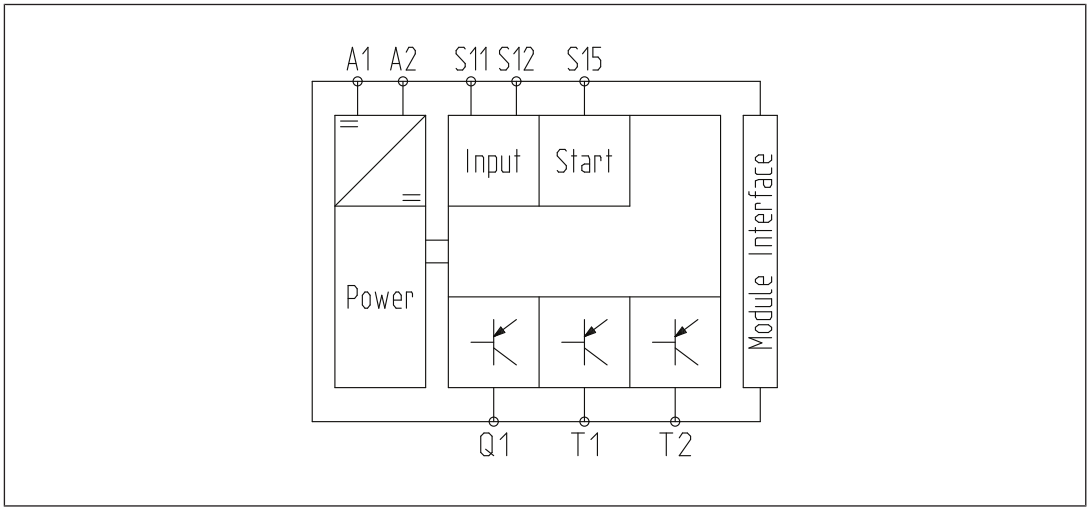

14.1.4 Dimensions

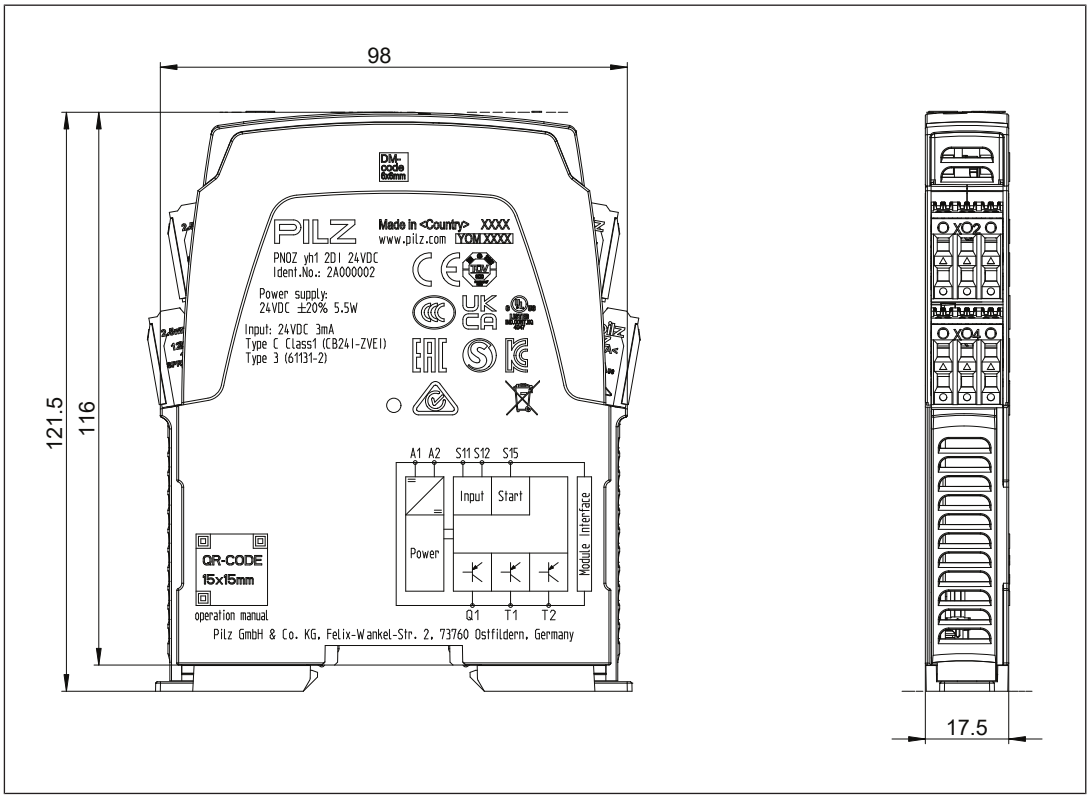

14.1.5 Technical details

General	
Certifications	**CE, EAC (Eurasian), TÜV, cULus Listed**
Electrical data	
Supply voltage	
for	**Supply to the system**
Voltage	**24 V**
Kind	**DC**
Voltage tolerance	**-20 %/+20 %**
Min. continuous current that the external power supply must provide	**5 A**
Inrush current that the external power supply must provide	**3 A**
Residual ripple DC	**20 %**
Supply voltage	
Current consumption	**100 mA**
Duty cycle	**100 %**
Status indicator	**LED**
Inputs	
Number	**2**
Number of start inputs	**1**
Input voltage in accordance with EN 61131-2 Type 1	**24 V DC**
Input current at rated voltage	**2,8 mA**
Input current range	**2 - 3 mA**
Pulse suppression	**1 ms**
Maximum input delay	**1,5 ms**
Potential isolation	**No**
Signal output	
Quantity	**1**
Voltage	**24 V**
Current	**50 mA**
Residual current at "0"	**10 µA**
Max. transient pulsed current	**70 mA**
Short circuit-proof	**yes**
Test pulse outputs	
Number of test pulse outputs	**2**
Voltage	**24 V**
Current	**0,3 A**
Max. duration of off time during self test	**4 ms**
Short circuit-proof	**yes**
Potential isolation	**No**
Times	
Recovery time at max. switching frequency 1/s	
After E-STOP	**30 ms**
Waiting period with manual and monitored start	**30 ms**

Times	
Min. start pulse duration with a monitored start	
With rising edge	**100 ms**
with rising and falling edge	**150 ms**
Max. start pulse duration with a monitored start	
with rising and falling edge	**2 s**
Supply interruption before de-energisation	**20 ms**
Simultaneity, input circuit	∞
Environmental data	
Ambient temperature	
In accordance with the standard	**EN 60068-2-14**
Temperature range	**-10 - 55 °C**
Storage temperature	
In accordance with the standard	**EN 60068-2-1/-2**
Temperature range	**-40 - 85 °C**
Climatic suitability	
In accordance with the standard	**EN 60068-2-78**
Condensation during operation	**Not permitted**
Max. operating height above sea level	**5000 m**
EMC	**EN 60947-5-1, EN 61000-6-2, EN 61000-6-4, EN 61326-3-1**
Vibration	
In accordance with the standard	**EN 60068-2-6**
Frequency	**10 - 55 Hz**
Amplitude	**0,35 mm**
Shock stress	
In accordance with the standard	**EN 60068-2-27**
Acceleration	**15g**
Duration	**11 ms**
Airgap creepage	
In accordance with the standard	**EN 60947-5-1**
Overvoltage category	**III**
Pollution degree	**2**
Protection type	
In accordance with the standard	**EN 60529**
Housing	**IP20**
Terminals	**IP20**
Mounting area (e.g. control cabinet)	**IP54**
Mechanical data	
Mounting position	**Any**
DIN rail	
Top hat rail	**35 x 7,5 EN 50022**
Recess width	**27 mm**

Mechanical data	
Max. cable length	
Max. cable length per input	**1 km**
Sum of individual cable lengths at the test pulse output	**6 km**
Material	
Bottom	**PC**
Top	**PC**
Connection type	**Spring-loaded terminal, screw terminal**
Mounting type	**plug-in**
Conductor cross section with screw terminals	
1 core flexible	**0,25 - 2,5 mm², 24 - 12 AWG**
2 core with the same cross section, flexible with crimp connectors, no plastic sleeve	**0,25 - 1 mm², 24 - 16 AWG**
2 core with the same cross section, flexible without crimp connectors or with TWIN crimp connectors	**0,25 - 1,5 mm², 24 - 16 AWG**
Torque setting with screw terminals	**0,5 Nm**
Stripping length with screw terminals	**8 mm**
Conductor cross section with spring-loaded terminals: Flexible with/without crimp connector	**0,2 - 2,5 mm², 24 - 12 AWG**
Spring-loaded terminals: Terminal points per connection	**2**
Stripping length with spring-loaded terminals	**9 mm**
Dimensions	
Height	**98 mm**
Width	**17,5 mm**
Depth	**121 mm**
Weight	**85 g**

Where standards are undated, the 2021-01 latest editions shall apply.

14.1.6 Safety characteristic data

NOTICE

You must comply with the safety characteristic data in order to achieve the required safety level for your plant/machine.

Unit	Operating mode	EN ISO 13849-1: 2015 PL	EN ISO 13849-1: 2015 Category	EN 62061 SIL CL	EN 62061 PFH_D [1/h]	IEC 61511 SIL	IEC 61511 PFD	EN ISO 13849-1: 2015 T_M [year]
Logic								
CPU	**2-channel**	**PL e**	**Cat. 4**	**SIL CL 3**	**1,51E-10**	**SIL 3**	**1,32E-05**	**20**
Input								
Inputs	**2-channel**	**PL e**	**Cat. 4**	**SIL CL 3**	**1,93E-10**	**SIL 3**	**1,67E-05**	**20**

Explanatory notes for the safety-related characteristic data:

- The SIL CL value in accordance with EN 62061 corresponds to the SIL value in accordance with EN 61508.
- T_M is the maximum mission time in accordance with EN ISO 13849-1. The value also applies as the retest interval in accordance with EN 61508-6 and IEC 61511 and as the proof test interval and mission time in accordance with EN 62061.

Additional information for applications in accordance with IEC 61511:

- Hardware fault tolerance: 1
- Subsystem of type B
- Safety function: safe shutdown

All the units used within a safety function must be considered when calculating the safety characteristic data.

INFORMATION

A safety function's SIL/PL values are **not** identical to the SIL/PL values of the units that are used and may be different. We recommend that you use the PAScal software tool to calculate the safety function's SIL/PL values.

14.1.7 Classification according to ZVEI, CB24I

The following tables describe the classes and specific values of the product interface and the classes of interfaces compatible with it. The classification is described in the ZVEI position paper "Classification of Binary 24 V Interfaces - Functional Safety aspects covered by dynamic testing".

Input	
Interfaces	
Drain	
Interface	Sensor
Class	C1
Source	
Interface	Module
Class	C1, C2, C3
Drain parameters	
Test pulse duration, safety outputs	1 ms
Min. input resistance	10 kOhm
Max. capacitive load	126 nF

14.1.8 Order reference

14.1.8.1 Product

Product type	Features	Order no.
PNOZ yh1 2DI 24VDC	Head module, 1 input function, supply voltage connection	2A000002

14.1.8.2 Accessories

Connection terminals

Product type	Features	Order no.
PNOZ s Setscrew terminals	1 set of screw terminals, 17.5 mm	750003
PNOZ s Setspring loaded terminals	1 set of spring-loaded terminals, 17.5 mm	751003
Adhesive seal	20 pieces	2A000200

15 Expansion modules

15.1 PNOZ yi1 4DI

15.1.1 Device features

- Expansion module for safe applications of the myPNOZ
- 2 input functions to connect E-STOP pushbutton, safety gate switch or light curtain and start button
- Start type can be set via rotary switch
- Input functions are AND-linked
- LED display for:
  - Module status
  - State of the inputs
  - State of the start input



NOTICE

Required firmware version of the head module: ≥ 1.0

15.1.2 Front view

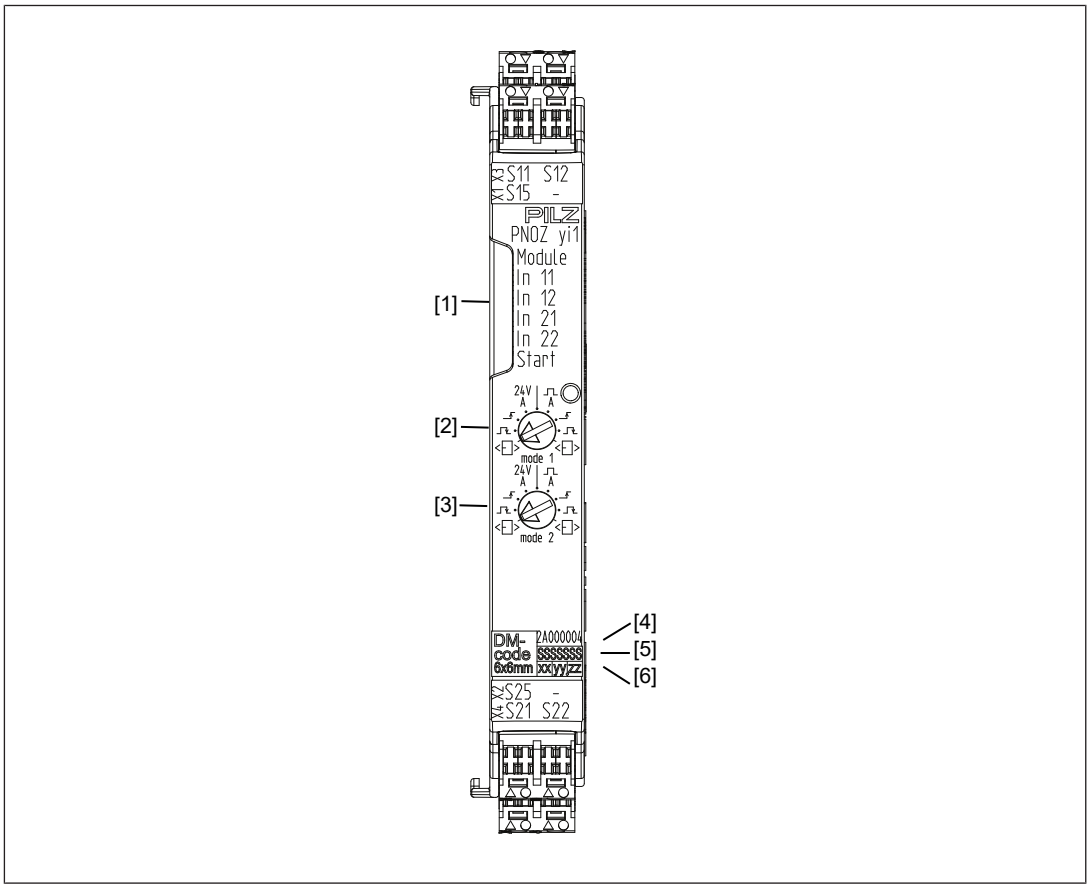

Legend

[1] LEDs for diagnostics

[2] Rotary switch for start types and test pulse evaluation (S11, S12)

[3] Rotary switch for start types and test pulse evaluation (S21, S22)

[4] Order number

[5] Serial number

[6] Device version

15.1.3 Block diagram

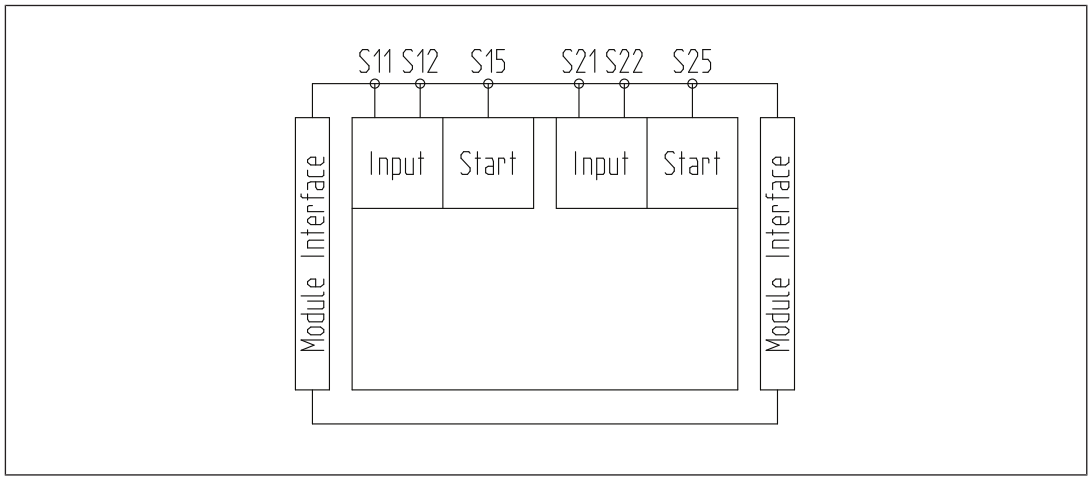

15.1.4 Dimensions

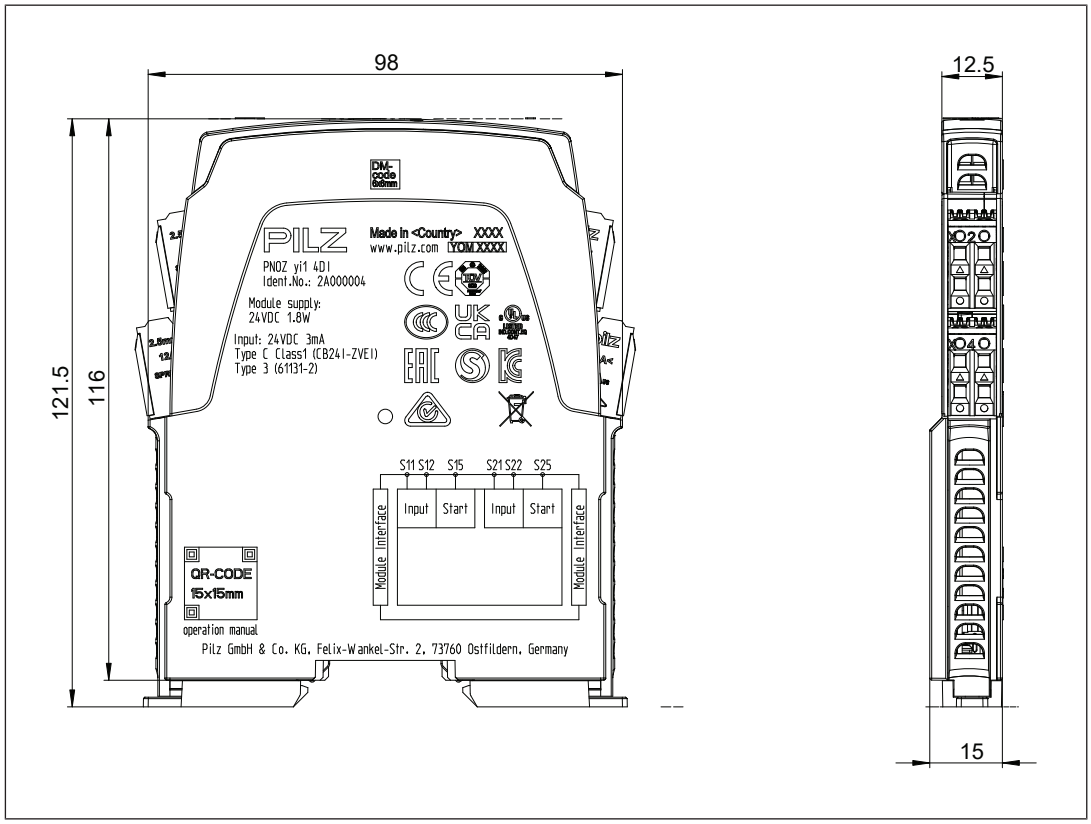

15.1.5 Technical details

General	
Certifications	**CE, EAC (Eurasian), TÜV, cULus Listed**
Electrical data	
Supply voltage	
for	**Module supply**
internal	**via head module**
Voltage	**24 V**
Kind	**DC**
Current consumption	**35 mA**
Duty cycle	**100 %**
Status indicator	**LED**
Inputs	
Number	**4**
Number of start inputs	**2**
Input voltage in accordance with EN 61131-2 Type 1	**24 V DC**
Input current at rated voltage	**2,8 mA**
Input current range	**2 - 3 mA**
Pulse suppression	**1 ms**
Maximum input delay	**1,5 ms**
Potential isolation	**No**
Times	
Recovery time at max. switching frequency 1/s	
After E-STOP	**30 ms**
Waiting period with manual and monitored start	**30 ms**
Min. start pulse duration with a monitored start	
With rising edge	**100 ms**
with rising and falling edge	**150 ms**
Max. start pulse duration with a monitored start	
with rising and falling edge	**2 s**
Supply interruption before de-energisation	**20 ms**
Simultaneity, input circuit	**∞**
Environmental data	
Ambient temperature	
In accordance with the standard	**EN 60068-2-14**
Temperature range	**-10 - 55 °C**
Storage temperature	
In accordance with the standard	**EN 60068-2-1/-2**
Temperature range	**-40 - 85 °C**
Climatic suitability	
In accordance with the standard	**EN 60068-2-78**
Condensation during operation	**Not permitted**
Max. operating height above sea level	**5000 m**
EMC	**EN 60947-5-1, EN 61000-6-2, EN 61000-6-4, EN 61326-3-1**

Environmental data	
Vibration	
In accordance with the standard	**EN 60068-2-6**
Frequency	**10 - 55 Hz**
Amplitude	**0,35 mm**
Shock stress	
In accordance with the standard	**EN 60068-2-27**
Acceleration	**15g**
Duration	**11 ms**
Airgap creepage	
In accordance with the standard	**EN 60947-5-1**
Overvoltage category	**III**
Pollution degree	**2**
Protection type	
In accordance with the standard	**EN 60529**
Housing	**IP20**
Terminals	**IP20**
Mounting area (e.g. control cabinet)	**IP54**
Mechanical data	
Mounting position	**Any**
DIN rail	
Top hat rail	**35 x 7,5 EN 50022**
Recess width	**27 mm**
Max. cable length	
Max. cable length per input	**1 km**
Material	
Bottom	**PC**
Top	**PC**
Connection type	**Spring-loaded terminal, screw terminal**
Mounting type	**plug-in**
Conductor cross section with screw terminals	
1 core flexible	**0,25 - 2,5 mm², 24 - 12 AWG**
2 core with the same cross section, flexible with crimp connectors, no plastic sleeve	**0,25 - 1 mm², 24 - 16 AWG**
2 core with the same cross section, flexible without crimp connectors or with TWIN crimp connectors	**0,25 - 1,5 mm², 24 - 16 AWG**
Torque setting with screw terminals	**0,5 Nm**
Stripping length with screw terminals	**8 mm**
Conductor cross section with spring-loaded terminals: Flexible with/without crimp connector	**0,2 - 2,5 mm², 24 - 12 AWG**
Spring-loaded terminals: Terminal points per connection	**2**
Stripping length with spring-loaded terminals	**9 mm**

Mechanical data	
Dimensions	
Height	**98 mm**
Width	**12,5 mm**
Depth	**121 mm**
Weight	**77 g**

Where standards are undated, the 2021-01 latest editions shall apply.

15.1.6 Safety characteristic data



NOTICE

You must comply with the safety characteristic data in order to achieve the required safety level for your plant/machine.

Operating mode	EN ISO 13849-1: 2015 PL	EN ISO 13849-1: 2015 Category	EN 62061 SIL CL	EN 62061 PFH_D [1/h]	IEC 61511 SIL	IEC 61511 PFD	EN ISO 13849-1: 2015 T_M [year]
2-channel	**PL e**	**Cat. 4**	**SIL CL 3**	**1,93E-10**	**SIL 3**	**1,67E-05**	**20**

Explanatory notes for the safety-related characteristic data:

- The SIL CL value in accordance with EN 62061 corresponds to the SIL value in accordance with EN 61508.
- T_M is the maximum mission time in accordance with EN ISO 13849-1. The value also applies as the retest interval in accordance with EN 61508-6 and IEC 61511 and as the proof test interval and mission time in accordance with EN 62061.

Additional information for applications in accordance with IEC 61511:

- Hardware fault tolerance: 1
- Subsystem of type B
- Safety function: safe shutdown

All the units used within a safety function must be considered when calculating the safety characteristic data.



INFORMATION

A safety function's SIL/PL values are **not** identical to the SIL/PL values of the units that are used and may be different. We recommend that you use the PAScal software tool to calculate the safety function's SIL/PL values.

15.1.7 Classification according to ZVEI, CB24I

The following tables describe the classes and specific values of the product interface and the classes of interfaces compatible with it. The classification is described in the ZVEI position paper "Classification of Binary 24 V Interfaces - Functional Safety aspects covered by dynamic testing".

Input	
Interfaces	
Drain	
Interface	Sensor
Class	C1
Source	
Interface	Module
Class	C1, C2, C3
Drain parameters	
Test pulse duration, safety outputs	1 ms
Min. input resistance	10 kOhm
Max. capacitive load	126 nF

15.1.8 Order reference

15.1.8.1 Product

Product type	Features	Order no.
PNOZ yi1 4DI	Expansion module with 2 input functions, AND-link	2A000004

15.1.8.2 Accessories

Connection terminals

Product type	Features	Order no.
PNOZ s Setscrew terminals	1 set of screw terminals, 12.5 mm	750002
PNOZ s Setspring loaded terminals	1 set of spring-loaded terminals, 12.5 mm	751002

15.2 PNOZ yi2 4DI OR

15.2.1 Device features

- Expansion module for safe applications of the myPNOZ
- 2 input functions to connect safety gate switch or light curtain and start button
- Start type can be set via rotary switch
- Input functions are OR-linked
- LED display for:
  - Module status
  - State of the inputs
  - State of the start input



NOTICE

Required firmware version of the head module: ≥ 1.0

15.2.2 Front view

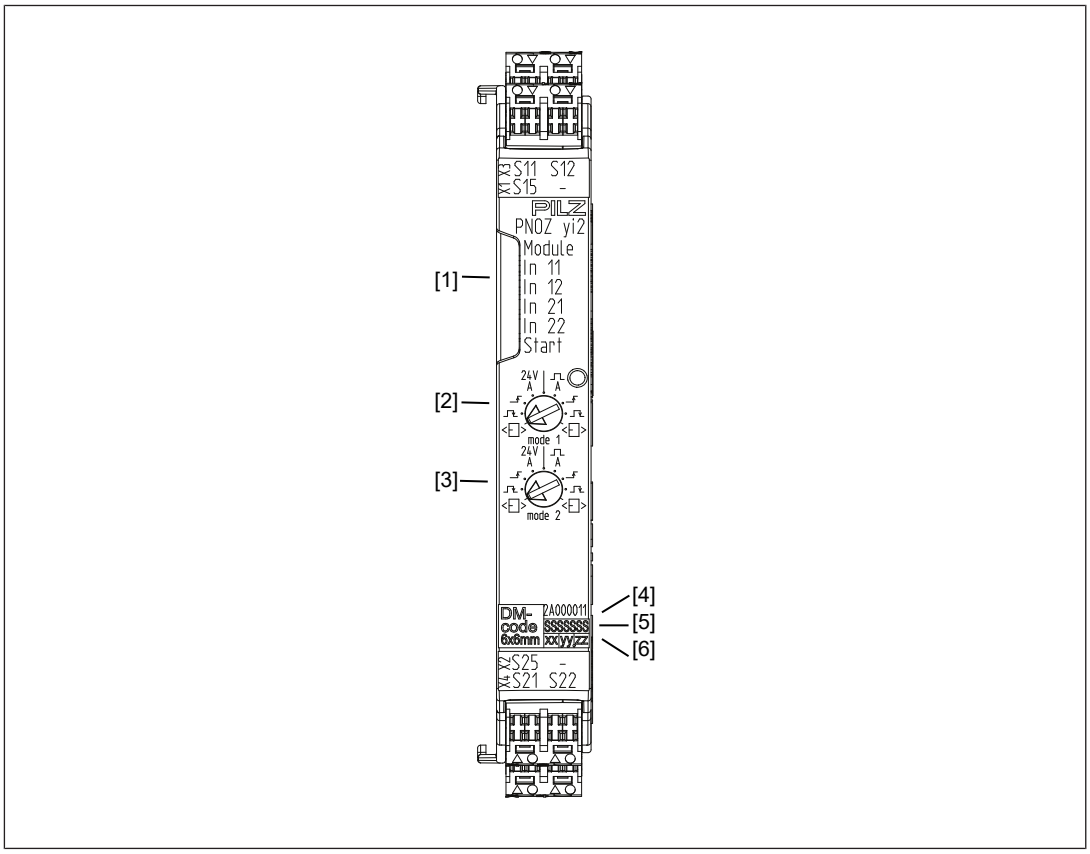

Legend

[1] LEDs for diagnostics

[2] Rotary switch for start types and test pulse evaluation (S11, S12)

[3] Rotary switch for start types and test pulse evaluation (S21, S22)

[4] Order number

[5] Serial number

[6] Device version

15.2.3 Block diagram

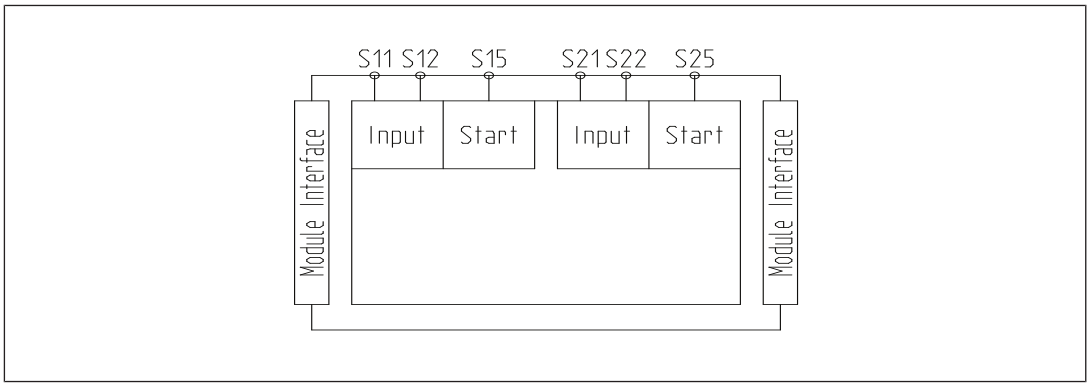

15.2.4 Dimensions

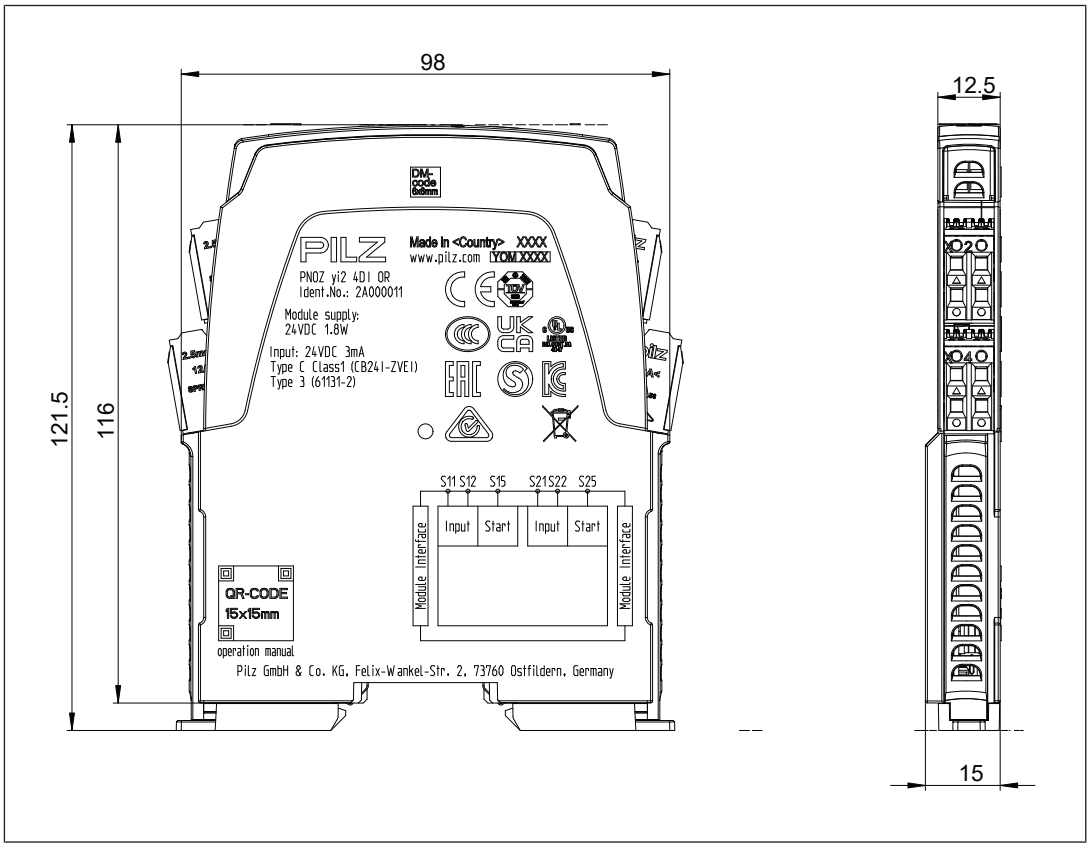

15.2.5 Technical details

General	
Certifications	**CE, EAC (Eurasian), TÜV, cULus Listed**
Electrical data	
Supply voltage	
for	**Module supply**
internal	**via head module**
Voltage	**24 V**
Kind	**DC**
Current consumption	**35 mA**
Duty cycle	**100 %**
Status indicator	**LED**
Inputs	
Number	**4**
Number of start inputs	**2**
Input voltage in accordance with EN 61131-2 Type 1	**24 V DC**
Input current at rated voltage	**2,8 mA**
Input current range	**2 - 3 mA**
Pulse suppression	**1 ms**
Maximum input delay	**1,5 ms**

Inputs	
Potential isolation	**No**
Times	
Recovery time at max. switching frequency 1/s	
After E-STOP	**30 ms**
Waiting period with manual and monitored start	**30 ms**
Min. start pulse duration with a monitored start	
With rising edge	**100 ms**
with rising and falling edge	**150 ms**
Max. start pulse duration with a monitored start	
with rising and falling edge	**2 s**
Supply interruption before de-energisation	**20 ms**
Simultaneity, input circuit	∞
Environmental data	
Ambient temperature	
In accordance with the standard	**EN 60068-2-14**
Temperature range	**-10 - 55 °C**
Storage temperature	
In accordance with the standard	**EN 60068-2-1/-2**
Temperature range	**-40 - 85 °C**
Climatic suitability	
In accordance with the standard	**EN 60068-2-78**
Condensation during operation	**Not permitted**
Max. operating height above sea level	**5000 m**
EMC	**EN 60947-5-1, EN 61000-6-2, EN 61000-6-4, EN 61326-3-1**
Vibration	
In accordance with the standard	**EN 60068-2-6**
Frequency	**10 - 55 Hz**
Amplitude	**0,35 mm**
Shock stress	
In accordance with the standard	**EN 60068-2-27**
Acceleration	**15g**
Duration	**11 ms**
Airgap creepage	
In accordance with the standard	**EN 60947-5-1**
Overvoltage category	**III**
Pollution degree	**2**
Protection type	
In accordance with the standard	**EN 60529**
Housing	**IP20**
Terminals	**IP20**
Mounting area (e.g. control cabinet)	**IP54**
Mechanical data	
Mounting position	**Any**

Mechanical data	
DIN rail	
Top hat rail	**35 x 7,5 EN 50022**
Recess width	**27 mm**
Max. cable length	
Max. cable length per input	**1 km**
Material	
Bottom	**PC**
Top	**PC**
Connection type	**Spring-loaded terminal, screw terminal**
Mounting type	**plug-in**
Conductor cross section with screw terminals	
1 core flexible	**0,25 - 2,5 mm², 24 - 12 AWG**
2 core with the same cross section, flexible with crimp connectors, no plastic sleeve	**0,25 - 1 mm², 24 - 16 AWG**
2 core with the same cross section, flexible without crimp connectors or with TWIN crimp connectors	**0,25 - 1,5 mm², 24 - 16 AWG**
Torque setting with screw terminals	**0,5 Nm**
Stripping length with screw terminals	**8 mm**
Conductor cross section with spring-loaded terminals: Flexible with/without crimp connector	**0,2 - 2,5 mm², 24 - 12 AWG**
Spring-loaded terminals: Terminal points per connection	**2**
Stripping length with spring-loaded terminals	**9 mm**
Dimensions	
Height	**98 mm**
Width	**12,5 mm**
Depth	**121 mm**
Weight	**77 g**

Where standards are undated, the 2021-01 latest editions shall apply.

15.2.6 Safety characteristic data

NOTICE

You must comply with the safety characteristic data in order to achieve the required safety level for your plant/machine.

Operating mode	EN ISO 13849-1: 2015 PL	EN ISO 13849-1: 2015 Category	EN 62061 SIL CL	EN 62061 PFH_D [1/h]	IEC 61511 SIL	IEC 61511 PFD	EN ISO 13849-1: 2015 T_M [year]
2-channel	**PL e**	**Cat. 4**	**SIL CL 3**	**1,93E-10**	**SIL 3**	**1,67E-05**	**20**

Explanatory notes for the safety-related characteristic data:

- The SIL CL value in accordance with EN 62061 corresponds to the SIL value in accordance with EN 61508.
- T_M is the maximum mission time in accordance with EN ISO 13849-1. The value also applies as the retest interval in accordance with EN 61508-6 and IEC 61511 and as the proof test interval and mission time in accordance with EN 62061.

Additional information for applications in accordance with IEC 61511:

- Hardware fault tolerance: 1
- Subsystem of type B
- Safety function: safe shutdown

All the units used within a safety function must be considered when calculating the safety characteristic data.

INFORMATION

A safety function's SIL/PL values are **not** identical to the SIL/PL values of the units that are used and may be different. We recommend that you use the PAScal software tool to calculate the safety function's SIL/PL values.

15.2.7 Classification according to ZVEI, CB24I

The following tables describe the classes and specific values of the product interface and the classes of interfaces compatible with it. The classification is described in the ZVEI position paper "Classification of Binary 24 V Interfaces - Functional Safety aspects covered by dynamic testing".

Input	
Interfaces	
Drain	
Interface	Sensor
Class	C1
Source	
Interface	Module
Class	C1, C2, C3
Drain parameters	
Test pulse duration, safety outputs	1 ms
Min. input resistance	10 kOhm
Max. capacitive load	126 nF

15.2.8 Order reference

15.2.8.1 Product

Product type	Features	Order no.
PNOZ yi2 4DI OR	Expansion module with 2 input functions, OR-link	2A000011

15.2.8.2 Accessories

Connection terminals

Product type	Features	Order no.
PNOZ s Setscrew terminals	1 set of screw terminals, 12.5 mm	750002
PNOZ s Setspring loaded terminals	1 set of spring-loaded terminals, 12.5 mm	751002

15.3 PNOZ yi3 2DI T3A

15.3.1 Device features

- Expansion module for safe applications of the myPNOZ
- 1 input function to connect a two-hand pushbutton (Type III A)
- 1 input function to connect E-STOP pushbutton, safety gate switch or light curtain and start button
- Start type can be set via rotary switch
- Input functions are AND-linked
- LED display for:
  - Module status
  - State of the inputs
  - State of the start input



NOTICE

Required firmware version of the head module: ≥ 1.0



NOTICE

The expansion module may not be used on press controllers. For these we recommend the expansion module PNOZ yi4. It is only suitable for use where the risk analysis has established a low level of risk (e.g. EN ISO 13849-1 Cat. 1)

15.3.2 Front view

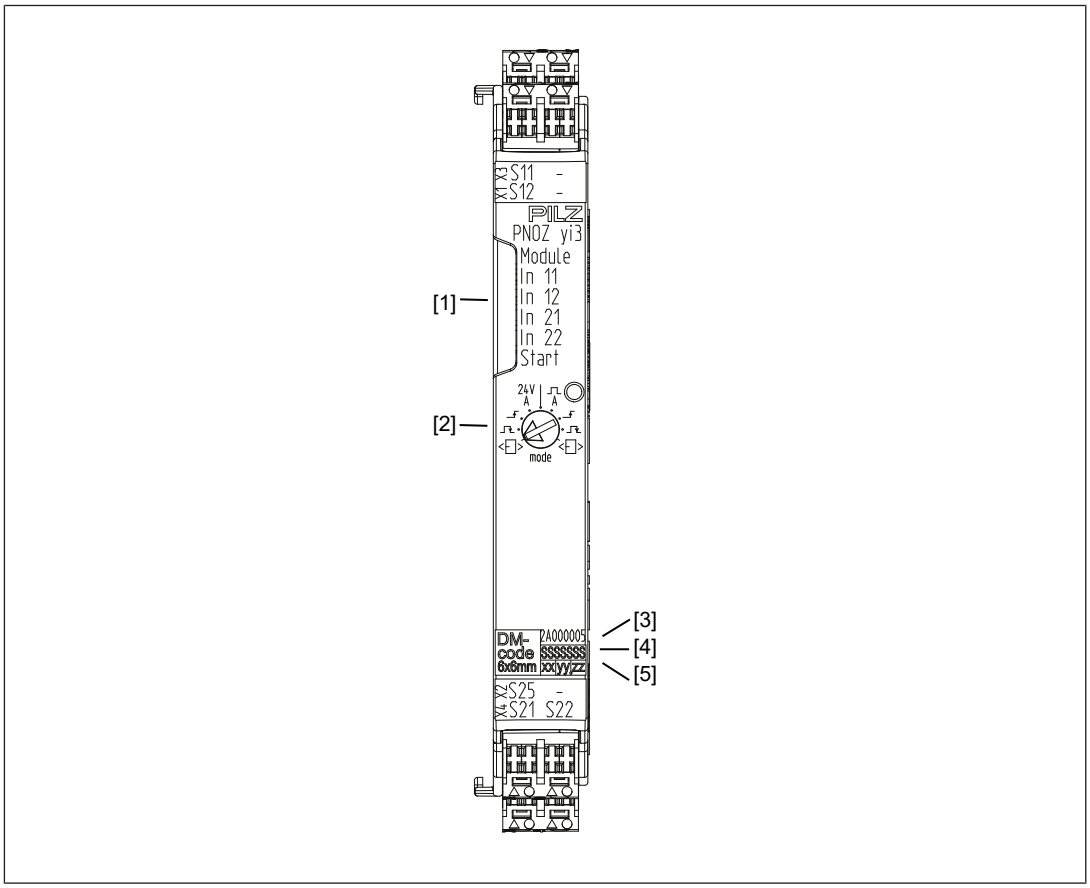

Legend

[1] LEDs for diagnostics

[2] Rotary switch for start types and test pulse evaluation (S21, S22)

[3] Order number

[4] Serial number

[5] Device version

15.3.3 Block diagram

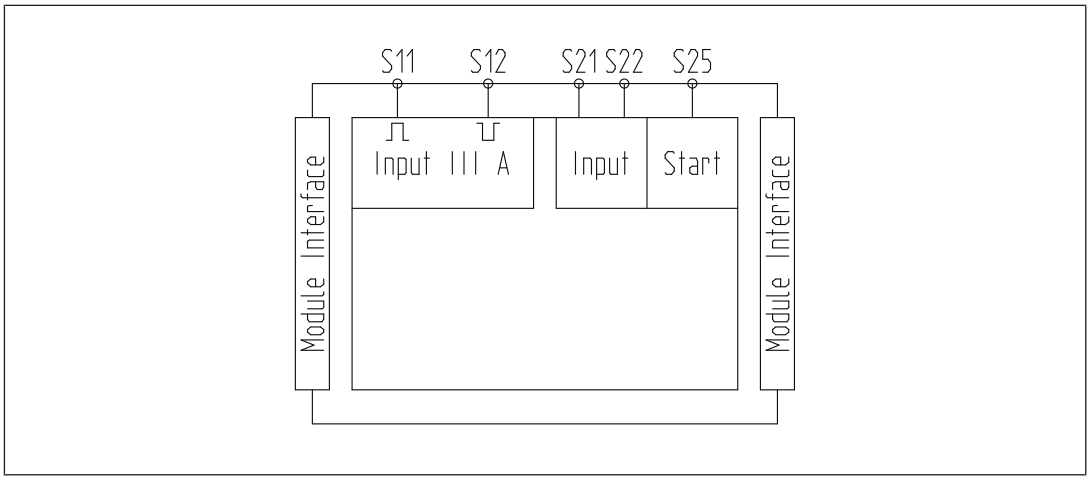

15.3.4 Dimensions

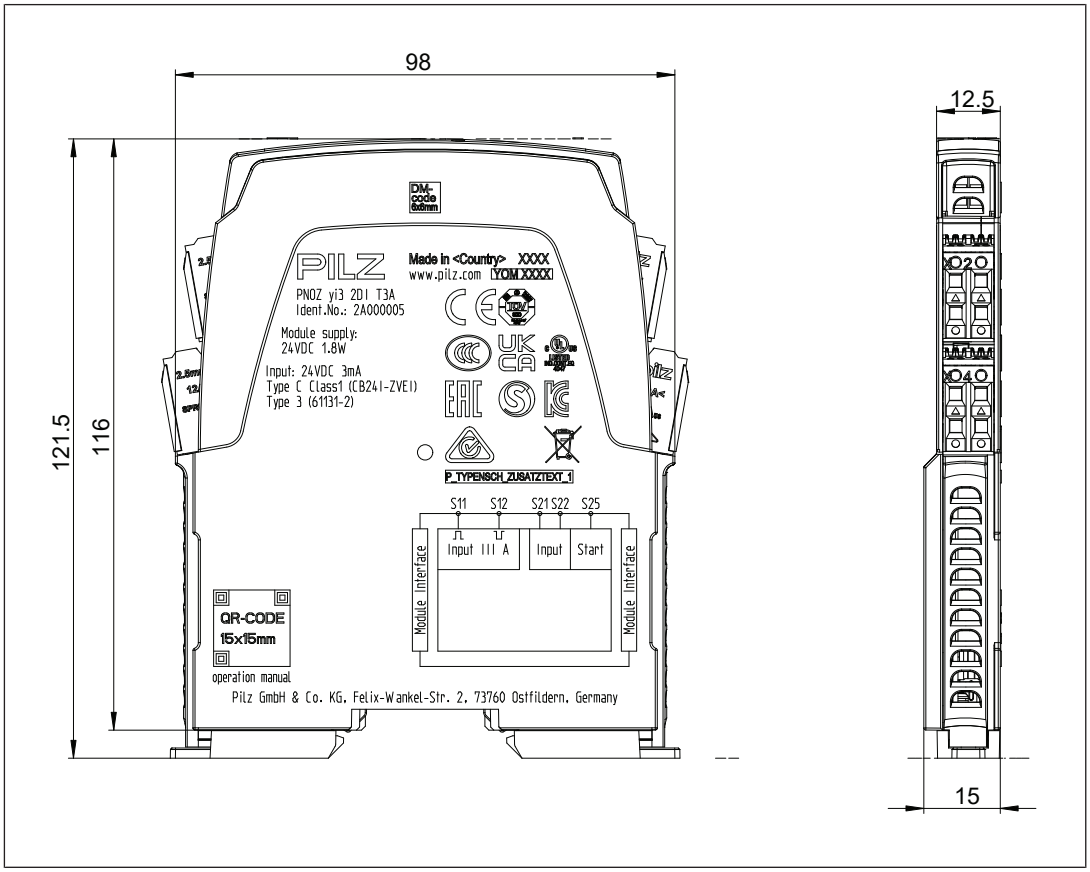

15.3.5 Technical details

General	
Certifications	**CE, EAC (Eurasian), TÜV, cULus Listed**
Electrical data	
Supply voltage	
for	**Module supply**
internal	**via head module**
Voltage	**24 V**
Kind	**DC**
Current consumption	**35 mA**
Duty cycle	**100 %**
Status indicator	**LED**
Two-hand control relay type	
In accordance with the standard	**EN 574**
Type	**III A**

Inputs	
Number	**4**
Number of start inputs	**1**
Input voltage in accordance with EN 61131-2 Type 1	**24 V DC**
Input current at rated voltage	**2,8 mA**
Input current range	**2 - 3 mA**
Pulse suppression	**1 ms**
Maximum input delay	**1,5 ms**
Potential isolation	**No**
Times	
Recovery time at max. switching frequency 1/s	
After E-STOP	**30 ms**
Waiting period with manual and monitored start	**30 ms**
Min. start pulse duration with a monitored start	
With rising edge	**100 ms**
with rising and falling edge	**150 ms**
Max. start pulse duration with a monitored start	
with rising and falling edge	**2 s**
Supply interruption before de-energisation	**20 ms**
Simultaneity in the two-hand circuit	**0,5 s**
Simultaneity, input circuit	**∞**
Environmental data	
Ambient temperature	
In accordance with the standard	**EN 60068-2-14**
Temperature range	**-10 - 55 °C**
Storage temperature	
In accordance with the standard	**EN 60068-2-1/-2**
Temperature range	**-40 - 85 °C**
Climatic suitability	
In accordance with the standard	**EN 60068-2-78**
Condensation during operation	**Not permitted**
Max. operating height above sea level	**5000 m**
EMC	**EN 60947-5-1, EN 61000-6-2, EN 61000-6-4, EN 61326-3-1**
Vibration	
In accordance with the standard	**EN 60068-2-6**
Frequency	**10 - 55 Hz**
Amplitude	**0,35 mm**
Shock stress	
In accordance with the standard	**EN 60068-2-27**
Acceleration	**15g**
Duration	**11 ms**

Environmental data	
Airgap creepage	
In accordance with the standard	**EN 60947-5-1**
Overvoltage category	**III**
Pollution degree	**2**
Protection type	
In accordance with the standard	**EN 60529**
Housing	**IP20**
Terminals	**IP20**
Mounting area (e.g. control cabinet)	**IP54**
Mechanical data	
Mounting position	**Any**
DIN rail	
Top hat rail	**35 x 7,5 EN 50022**
Recess width	**27 mm**
Max. cable length	
Max. cable length per input	**1 km**
Material	
Bottom	**PC**
Top	**PC**
Connection type	**Spring-loaded terminal, screw terminal**
Mounting type	**plug-in**
Conductor cross section with screw terminals	
1 core flexible	**0,25 - 2,5 mm², 24 - 12 AWG**
2 core with the same cross section, flexible with crimp connectors, no plastic sleeve	**0,25 - 1 mm², 24 - 16 AWG**
2 core with the same cross section, flexible without crimp connectors or with TWIN crimp connectors	**0,25 - 1,5 mm², 24 - 16 AWG**
Torque setting with screw terminals	**0,5 Nm**
Stripping length with screw terminals	**8 mm**
Conductor cross section with spring-loaded terminals: Flexible with/without crimp connector	**0,2 - 2,5 mm², 24 - 12 AWG**
Spring-loaded terminals: Terminal points per connection	**2**
Stripping length with spring-loaded terminals	**9 mm**
Dimensions	
Height	**98 mm**
Width	**12,5 mm**
Depth	**121 mm**
Weight	**74 g**

Where standards are undated, the 2021-01 latest editions shall apply.

15.3.6 Safety characteristic data

NOTICE

You must comply with the safety characteristic data in order to achieve the required safety level for your plant/machine.

Operating mode	EN ISO 13849-1: 2015 PL	EN ISO 13849-1: 2015 Category	EN 62061 SIL CL	EN 62061 PFH_D [1/h]	IEC 61511 SIL	IEC 61511 PFD	EN ISO 13849-1: 2015 T_M [year]
2-channel	**PL e**	**Cat. 4**	**SIL CL 3**	**1,93E-10**	**SIL 3**	**1,67E-05**	**20**
Two-hand function	**PL d**	**Cat. 2**	**SIL CL 2**	**6,07E-09**	**SIL 2**	**5,32E-04**	**20**

Explanatory notes for the safety-related characteristic data:

- The SIL CL value in accordance with EN 62061 corresponds to the SIL value in accordance with EN 61508.
- T_M is the maximum mission time in accordance with EN ISO 13849-1. The value also applies as the retest interval in accordance with EN 61508-6 and IEC 61511 and as the proof test interval and mission time in accordance with EN 62061.

Additional information for applications in accordance with IEC 61511:

- Hardware fault tolerance: 1
- Subsystem of type B
- Safety function: safe shutdown

All the units used within a safety function must be considered when calculating the safety characteristic data.

INFORMATION

A safety function's SIL/PL values are **not** identical to the SIL/PL values of the units that are used and may be different. We recommend that you use the PAScal software tool to calculate the safety function's SIL/PL values.

15.3.7 Classification according to ZVEI, CB24I

The following tables describe the classes and specific values of the product interface and the classes of interfaces compatible with it. The classification is described in the ZVEI position paper "Classification of Binary 24 V Interfaces - Functional Safety aspects covered by dynamic testing".

Input	
Interfaces	
Drain	
Interface	Sensor
Class	C1
Source	
Interface	Module
Class	C1, C2, C3
Drain parameters	
Test pulse duration, safety outputs	1 ms
Min. input resistance	10 kOhm
Max. capacitive load	126 nF

15.3.8 Order reference

15.3.8.1 Product

Product type	Features	Order no.
PNOZ yi3 2DI T3A	Expansion module with 1 input function for two-hand monitoring (Type III A), 1 input function for additional safety function	2A000005

15.3.8.2 Accessories

Connection terminals

Product type	Features	Order no.
PNOZ s Setscrew terminals	1 set of screw terminals, 12.5 mm	750002
PNOZ s Setspring loaded terminals	1 set of spring-loaded terminals, 12.5 mm	751002

15.4 PNOZ yi4 2DI T3C

15.4.1 Device features

- Expansion module for safe applications of the myPNOZ
- 1 input function to connect a two-hand pushbutton (Type III C), for use on controllers for metal processing presses as a simultaneity component
- 1 input function to connect E-STOP pushbutton, safety gate switch or light curtain and start button
- Start type can be set via rotary switch
- Input functions are AND-linked
- LED display for:
  - Module status
  - State of the inputs
  - State of the start input



NOTICE

Required firmware version of the head module: ≥ 1.0

15.4.2 Front view

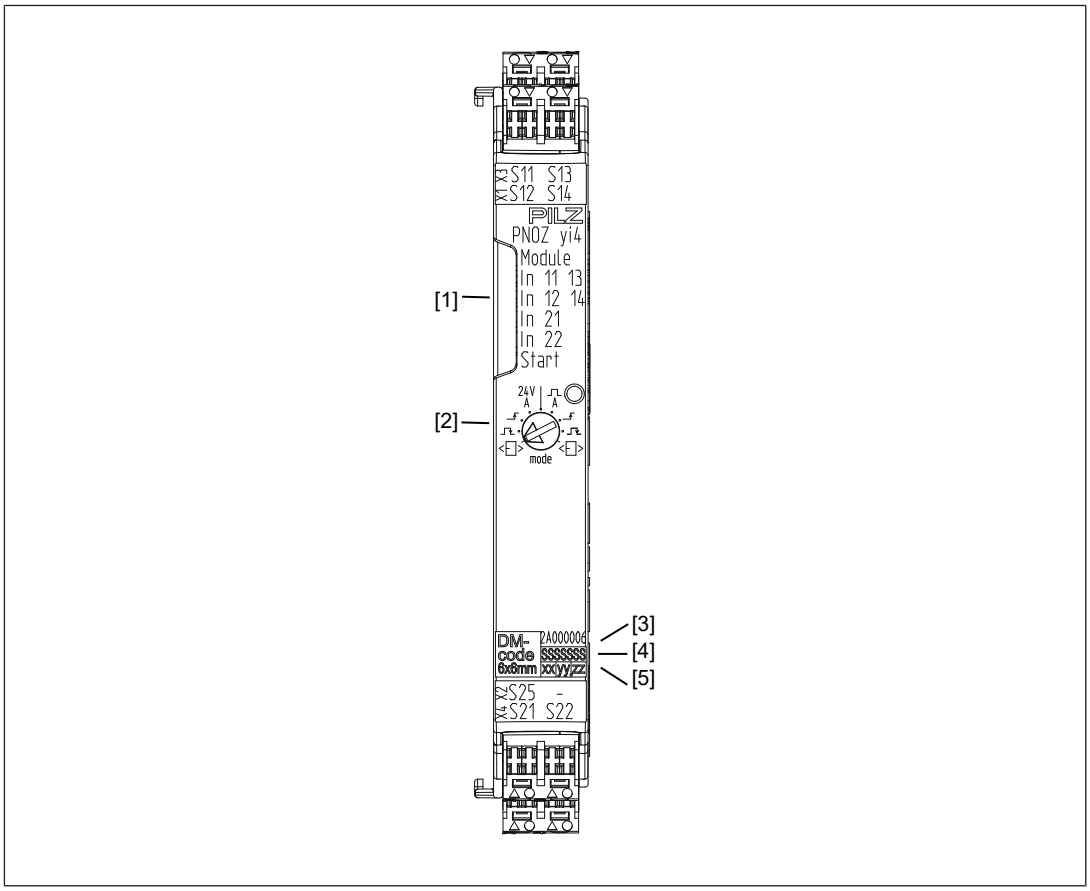

Legend

[1] LEDs for diagnostics

[2] Rotary switch for start types and test pulse evaluation (S21, S22)

[3] Order number

[4] Serial number

[5] Device version

15.4.3 Block diagram

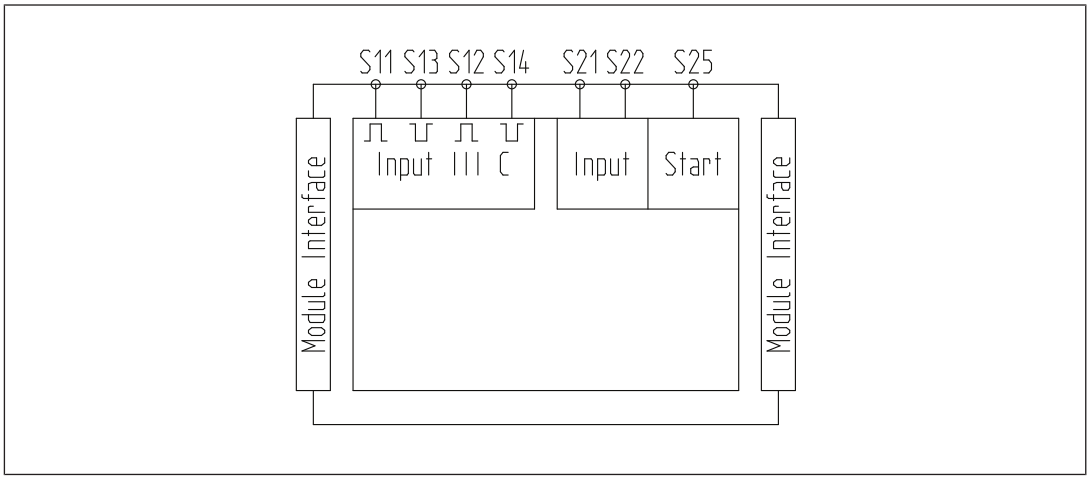

15.4.4 Dimensions

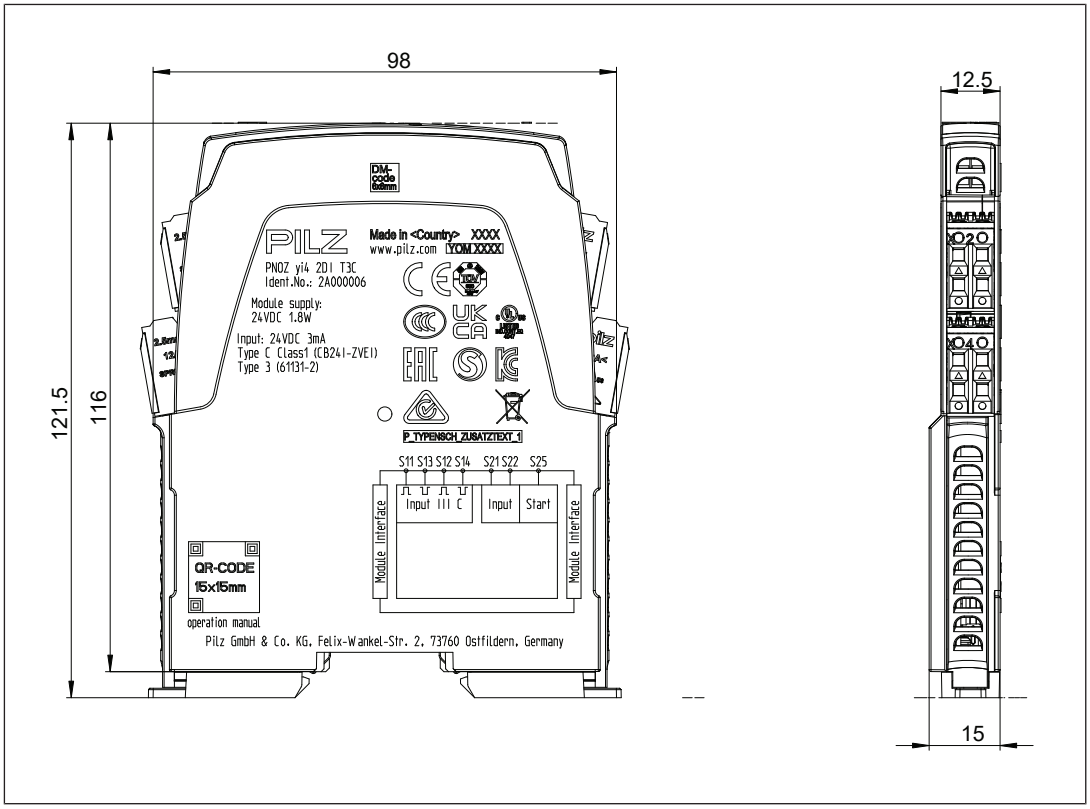

15.4.5 Technical details

General	
Certifications	**CE, EAC (Eurasian), TÜV, cULus Listed**
Electrical data	
Supply voltage	
for	**Module supply**
internal	**via head module**
Voltage	**24 V**
Kind	**DC**
Current consumption	**35 mA**
Duty cycle	**100 %**
Status indicator	**LED**
Two-hand control relay type	
In accordance with the standard	**EN 574**
Type	**III C**
Inputs	
Number	**6**
Number of start inputs	**1**
Input voltage in accordance with EN 61131-2 Type 1	**24 V DC**

Inputs	
Input current at rated voltage	**2,8 mA**
Input current range	**2 - 3 mA**
Pulse suppression	**1 ms**
Maximum input delay	**1,5 ms**
Potential isolation	**No**
Times	
Recovery time at max. switching frequency 1/s	
After E-STOP	**30 ms**
Waiting period with manual and monitored start	**30 ms**
Min. start pulse duration with a monitored start	
With rising edge	**100 ms**
with rising and falling edge	**150 ms**
Max. start pulse duration with a monitored start	
with rising and falling edge	**2 s**
Supply interruption before de-energisation	**20 ms**
Simultaneity in the two-hand circuit	**0,5 s**
Simultaneity, input circuit	∞
Environmental data	
Ambient temperature	
In accordance with the standard	**EN 60068-2-14**
Temperature range	**-10 - 55 °C**
Storage temperature	
In accordance with the standard	**EN 60068-2-1/-2**
Temperature range	**-40 - 85 °C**
Climatic suitability	
In accordance with the standard	**EN 60068-2-78**
Condensation during operation	**Not permitted**
Max. operating height above sea level	**5000 m**
EMC	**EN 60947-5-1, EN 61000-6-2, EN 61000-6-4, EN 61326-3-1**
Vibration	
In accordance with the standard	**EN 60068-2-6**
Frequency	**10 - 55 Hz**
Amplitude	**0,35 mm**
Shock stress	
In accordance with the standard	**EN 60068-2-27**
Acceleration	**15g**
Duration	**11 ms**
Airgap creepage	
In accordance with the standard	**EN 60947-5-1**
Overvoltage category	**III**
Pollution degree	**2**

Environmental data	
Protection type	
In accordance with the standard	**EN 60529**
Housing	**IP20**
Terminals	**IP20**
Mounting area (e.g. control cabinet)	**IP54**
Mechanical data	
Mounting position	**Any**
DIN rail	
Top hat rail	**35 x 7,5 EN 50022**
Recess width	**27 mm**
Max. cable length	
Max. cable length per input	**1 km**
Material	
Bottom	**PC**
Top	**PC**
Connection type	**Spring-loaded terminal, screw terminal**
Mounting type	**plug-in**
Conductor cross section with screw terminals	
1 core flexible	**0,25 - 2,5 mm², 24 - 12 AWG**
2 core with the same cross section, flexible with crimp connectors, no plastic sleeve	**0,25 - 1 mm², 24 - 16 AWG**
2 core with the same cross section, flexible without crimp connectors or with TWIN crimp connectors	**0,25 - 1,5 mm², 24 - 16 AWG**
Torque setting with screw terminals	**0,5 Nm**
Stripping length with screw terminals	**8 mm**
Conductor cross section with spring-loaded terminals: Flexible with/without crimp connector	**0,2 - 2,5 mm², 24 - 12 AWG**
Spring-loaded terminals: Terminal points per connection	**2**
Stripping length with spring-loaded terminals	**9 mm**
Dimensions	
Height	**98 mm**
Width	**12,5 mm**
Depth	**121 mm**
Weight	**74 g**

Where standards are undated, the 2021-01 latest editions shall apply.

15.4.6 Safety characteristic data

NOTICE

You must comply with the safety characteristic data in order to achieve the required safety level for your plant/machine.

Operating mode	EN ISO 13849-1: 2015 PL	EN ISO 13849-1: 2015 Category	EN 62061 SIL CL	EN 62061 PFH_D [1/h]	IEC 61511 SIL	IEC 61511 PFD	EN ISO 13849-1: 2015 T_M [year]
2-channel	**PL e**	**Cat. 4**	**SIL CL 3**	**1,93E-10**	**SIL 3**	**1,67E-05**	**20**
Two-hand function	**PL e**	**Cat. 4**	**SIL CL 3**	**3,19E-10**	**SIL 3**	**2,76E-05**	**20**

Explanatory notes for the safety-related characteristic data:

- The SIL CL value in accordance with EN 62061 corresponds to the SIL value in accordance with EN 61508.
- T_M is the maximum mission time in accordance with EN ISO 13849-1. The value also applies as the retest interval in accordance with EN 61508-6 and IEC 61511 and as the proof test interval and mission time in accordance with EN 62061.

Additional information for applications in accordance with IEC 61511:

- Hardware fault tolerance: 1
- Subsystem of type B
- Safety function: safe shutdown

All the units used within a safety function must be considered when calculating the safety characteristic data.

INFORMATION

A safety function's SIL/PL values are **not** identical to the SIL/PL values of the units that are used and may be different. We recommend that you use the PAScal software tool to calculate the safety function's SIL/PL values.

15.4.7 Classification according to ZVEI, CB24I

The following tables describe the classes and specific values of the product interface and the classes of interfaces compatible with it. The classification is described in the ZVEI position paper "Classification of Binary 24 V Interfaces - Functional Safety aspects covered by dynamic testing".

Input	
Interfaces	
Drain	
Interface	Sensor
Class	C1
Source	
Interface	Module
Class	C1, C2, C3
Drain parameters	
Test pulse duration, safety outputs	1 ms
Min. input resistance	10 kOhm
Max. capacitive load	126 nF

15.4.8 Order reference

15.4.8.1 Product

Product type	Features	Order no.
PNOZ yi4 2DI T3C	Input module with 1 input function for two-hand monitoring (Type III C), 1 input function for additional safety function	2A000006

15.4.8.2 Accessories

Connection terminals

Product type	Features	Order no.
PNOZ s Setscrew terminals	1 set of screw terminals, 12.5 mm	750002
PNOZ s Setspring loaded terminals	1 set of spring-loaded terminals, 12.5 mm	751002

15.5 PNOZ yo1 2SO

15.5.1 Device features

- Expansion module for safe applications of the myPNOZ
- 2 output functions, each with 1 safe semiconductor output, instantaneous, and 1 input for feedback loop
- 1 signal output, e.g. for display
- Supply voltage connection for the semiconductor outputs
- LED display for:
  - Module status
  - Switch state of the outputs



NOTICE

Required firmware version of the head module: ≥ 1.0

15.5.2 Front view

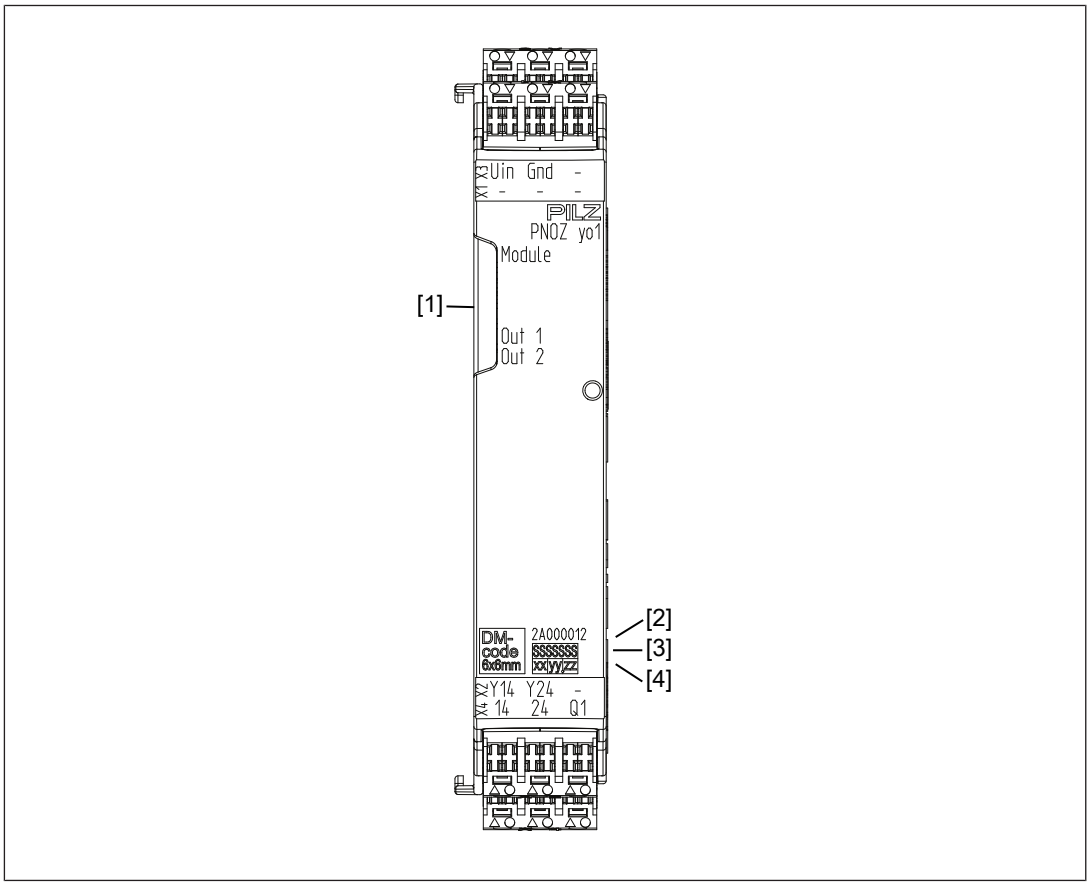

Legend

[1] LEDs for diagnostics

[2] Order number

[3] Serial number

[4] Device version

15.5.3 Block diagram

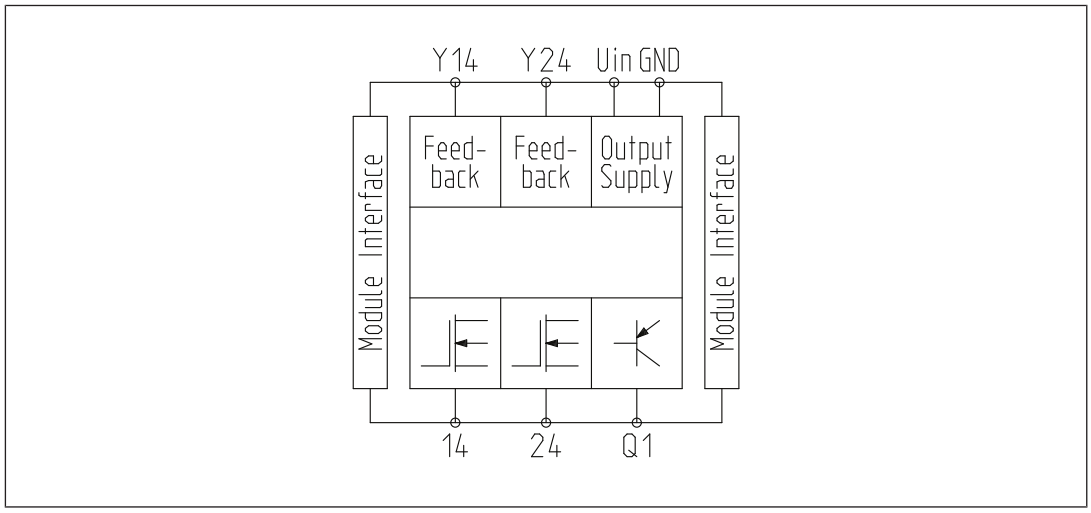

15.5.4 Dimensions

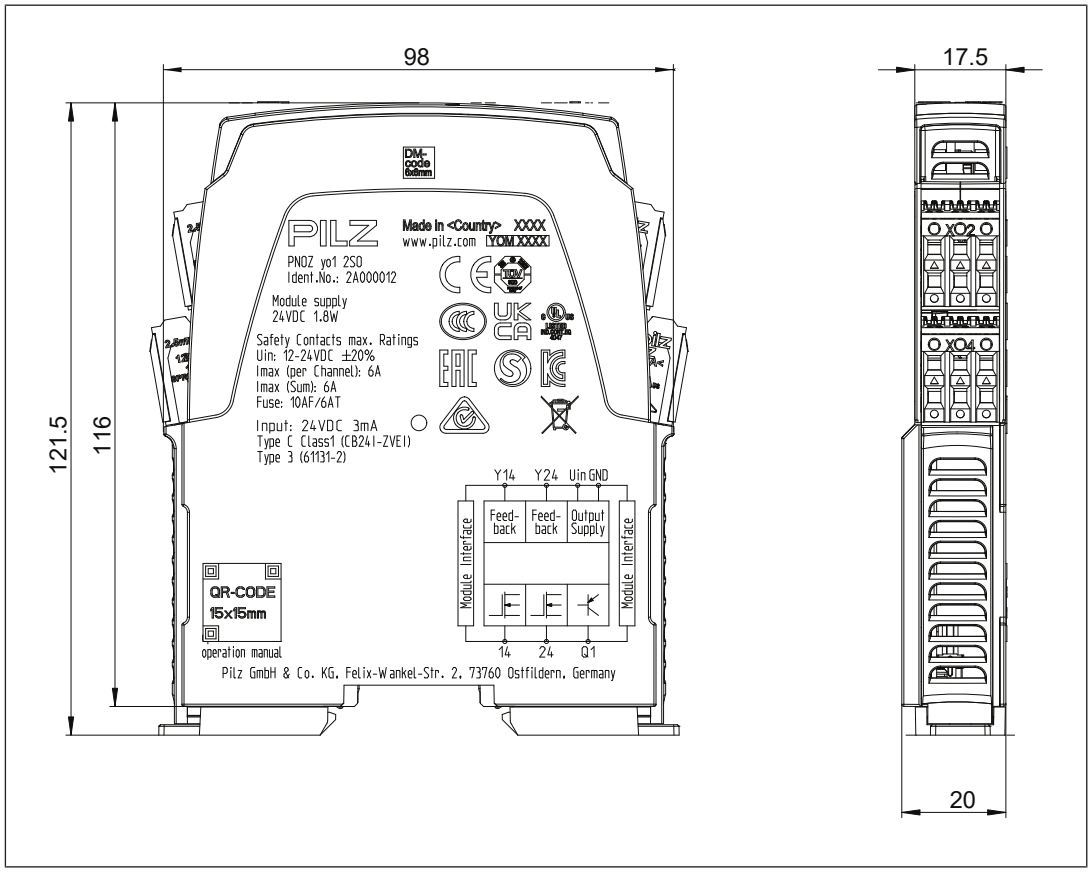

15.5.5 Technical details

General	
Certifications	**CE, EAC (Eurasian), TÜV, cULus Listed**
Electrical data	
Supply voltage	
for	**Supply to the SC outputs**
Voltage	**12 - 24 V**
Kind	**DC**
Voltage tolerance	**-20 %/+20 %**
Max. continuous current that the external power supply must provide	**6 A**
Potential isolation	**No**
Supply voltage	
for	**Module supply**
internal	**via head module**
Voltage	**24 V**
Kind	**DC**
Current consumption	**105 mA**
Duty cycle	**100 %**
Status indicator	**LED**
Permitted loads	**inductive, capacitive, resistive**
Inputs	
Number of feedback loop inputs	**1**
Semiconductor outputs	
Number of safety outputs	
Instantaneous	**2**
Switching capability	
Voltage	**12 - 24 V**
Current	**6 A**
Residual current at "0" signal	**0,5 mA**
Max. transient pulsed current	**100 A**
Max. capacitive load	**2,5 µF**
Max. internal voltage drop	**160 mV**
Max. duration of off time during self test	**500 µs**
Potential isolation	**No**
Short circuit-proof	**yes**
Signal output	
Quantity	**1**
Voltage	**24 V**
Current	**50 mA**
Residual current at "0"	**10 µA**
Max. transient pulsed current	**70 mA**
Short circuit-proof	**yes**
Times	
Supply interruption before de-energisation	**20 ms**

Environmental data	
Ambient temperature	
In accordance with the standard	**EN 60068-2-14**
Temperature range	**-10 - 55 °C**
Storage temperature	
In accordance with the standard	**EN 60068-2-1/-2**
Temperature range	**-40 - 85 °C**
Climatic suitability	
In accordance with the standard	**EN 60068-2-78**
Condensation during operation	**Not permitted**
Max. operating height above sea level	**5000 m**
EMC	**EN 60947-5-1, EN 61000-6-2, EN 61000-6-4, EN 61326-3-1**
Vibration	
In accordance with the standard	**EN 60068-2-6**
Frequency	**10 - 55 Hz**
Amplitude	**0,35 mm**
Shock stress	
In accordance with the standard	**EN 60068-2-27**
Acceleration	**15g**
Duration	**11 ms**
Airgap creepage	
In accordance with the standard	**EN 60947-5-1**
Overvoltage category	**III**
Pollution degree	**2**
Protection type	
In accordance with the standard	**EN 60529**
Housing	**IP20**
Terminals	**IP20**
Mounting area (e.g. control cabinet)	**IP54**
Mechanical data	
Mounting position	**Any**
DIN rail	
Top hat rail	**35 x 7,5 EN 50022**
Recess width	**27 mm**
Material	
Bottom	**PC**
Top	**PC**
Connection type	**Spring-loaded terminal, screw terminal**
Mounting type	**plug-in**
Conductor cross section with screw terminals	
1 core flexible	**0,25 - 2,5 mm², 24 - 12 AWG**
2 core with the same cross section, flexible with crimp connectors, no plastic sleeve	**0,25 - 1 mm², 24 - 16 AWG**
2 core with the same cross section, flexible without crimp connectors or with TWIN crimp connectors	**0,25 - 1,5 mm², 24 - 16 AWG**

Mechanical data	
Torque setting with screw terminals	**0,5 Nm**
Stripping length with screw terminals	**8 mm**
Conductor cross section with spring-loaded terminals: Flexible with/without crimp connector	**0,2 - 2,5 mm², 24 - 12 AWG**
Spring-loaded terminals: Terminal points per connection	**2**
Stripping length with spring-loaded terminals	**9 mm**
Dimensions	
Height	**98 mm**
Width	**17,5 mm**
Depth	**121 mm**
Weight	**85 g**

Where standards are undated, the 2021-01 latest editions shall apply.

15.5.6 Safety characteristic data



NOTICE

You must comply with the safety characteristic data in order to achieve the required safety level for your plant/machine.

Unit	Operating mode	EN ISO 13849-1: 2015 PL	EN ISO 13849-1: 2015 Category	EN 62061 SIL CL	EN 62061 PFH_D [1/h]	IEC 61511 SIL	IEC 61511 PFD	EN ISO 13849-1: 2015 T_M [year]
SC output, single	**2-channel**	**PL e**	**Cat. 4**	**SIL CL 3**	**6,44E-10**	**SIL 3**	**5,43E-05**	**20**
SC output, redundant	**2-channel**	**PL e**	**Cat. 4**	**SIL CL 3**	**9,68E-10**	**SIL 3**	**8,16E-05**	**20**

Explanatory notes for the safety-related characteristic data:

- The SIL CL value in accordance with EN 62061 corresponds to the SIL value in accordance with EN 61508.
- T_M is the maximum mission time in accordance with EN ISO 13849-1. The value also applies as the retest interval in accordance with EN 61508-6 and IEC 61511 and as the proof test interval and mission time in accordance with EN 62061.
- These characteristic data also apply in applications with feedback loop

Additional information for applications in accordance with IEC 61511:

- Hardware fault tolerance: 1
- Subsystem of type B
- Safety function: safe shutdown

All the units used within a safety function must be considered when calculating the safety characteristic data.

INFORMATION

A safety function's SIL/PL values are **not** identical to the SIL/PL values of the units that are used and may be different. We recommend that you use the PAScal software tool to calculate the safety function's SIL/PL values.

15.5.7 Classification according to ZVEI, CB24I

The following tables describe the classes and specific values of the product interface and the classes of interfaces compatible with it. The classification is described in the ZVEI position paper "Classification of Binary 24 V Interfaces - Functional Safety aspects covered by dynamic testing".

Single-pole output	
Interfaces	
Source	
Interface	Module
Class	C2
Drain	
Interface	Actuator
Class	C1, C2
Source parameters	
Max. test pulse duration	500 µs
Max. rated current	6 A
Max. capacitive load	2,5 µF

15.5.8 Order reference

15.5.8.1 Product

Product type	Features	Order no.
PNOZ yo1 2SO	Expansion module with 2 output functions, instantaneous semiconductor output	2A000012

15.5.8.2 Accessories

Connection terminals

Product type	Features	Order no.
PNOZ s Setscrew terminals	1 set of screw terminals, 17.5 mm	750003
PNOZ s Setspring loaded terminals	1 set of spring-loaded terminals, 17.5 mm	751003

15.6 PNOZ yo2 3NO

15.6.1 Device features

- Expansion module for safe applications of the myPNOZ
- 1 output function with 3 safe relay outputs, positive-guided, instantaneous, and 1 input for feedback loop
- 1 signal output, e.g. for display
- LED display for:
  - Module status
  - Switch state of the outputs



NOTICE

Required firmware version of the head module: ≥ 1.0

15.6.2 Front view

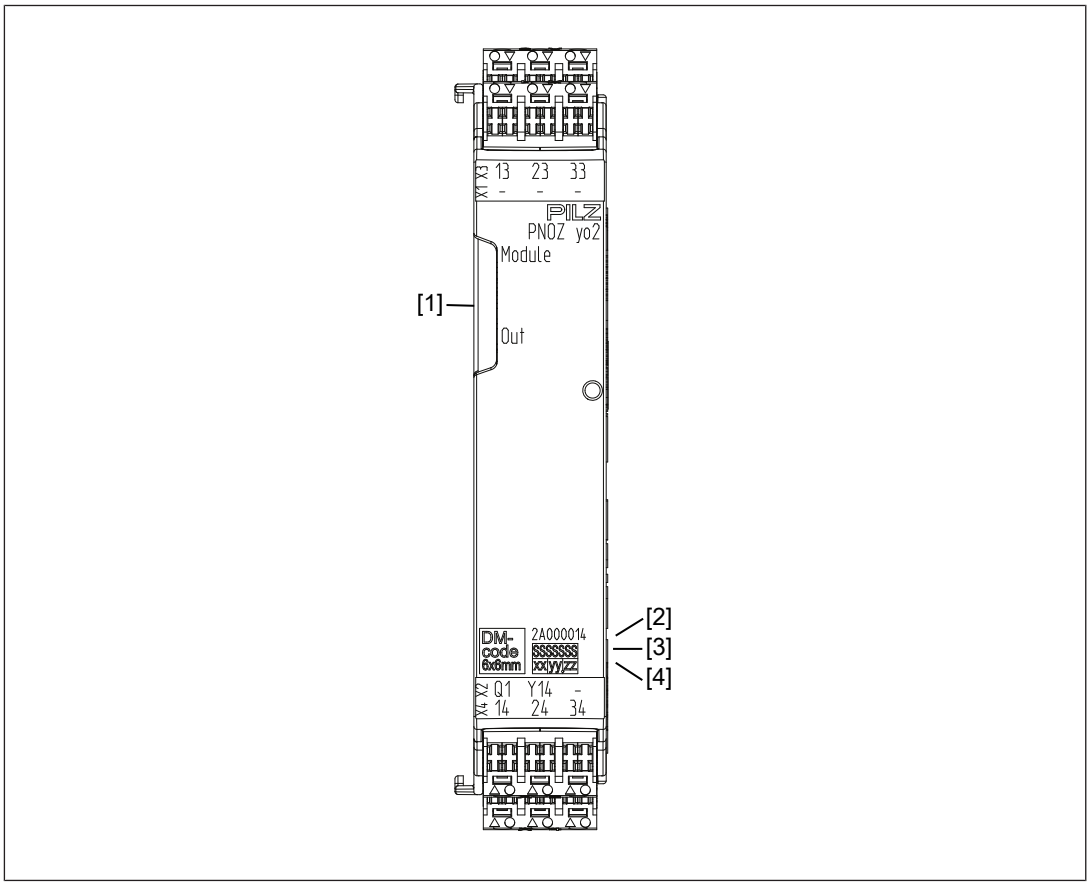

Legend

[1] LEDs for diagnostics

[2] Order number

[3] Serial number

[4] Device version

15.6.3 Block diagram

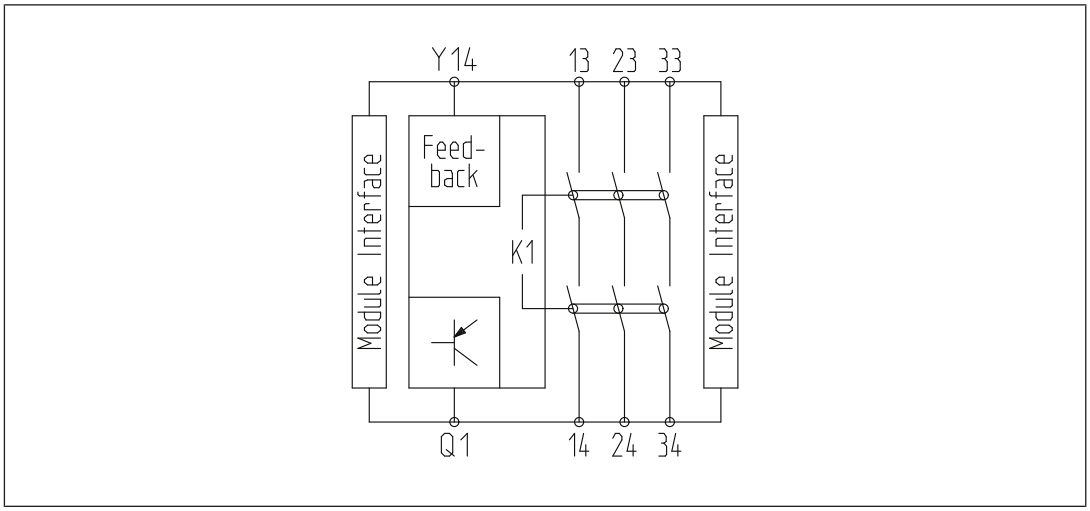

15.6.4 Dimensions

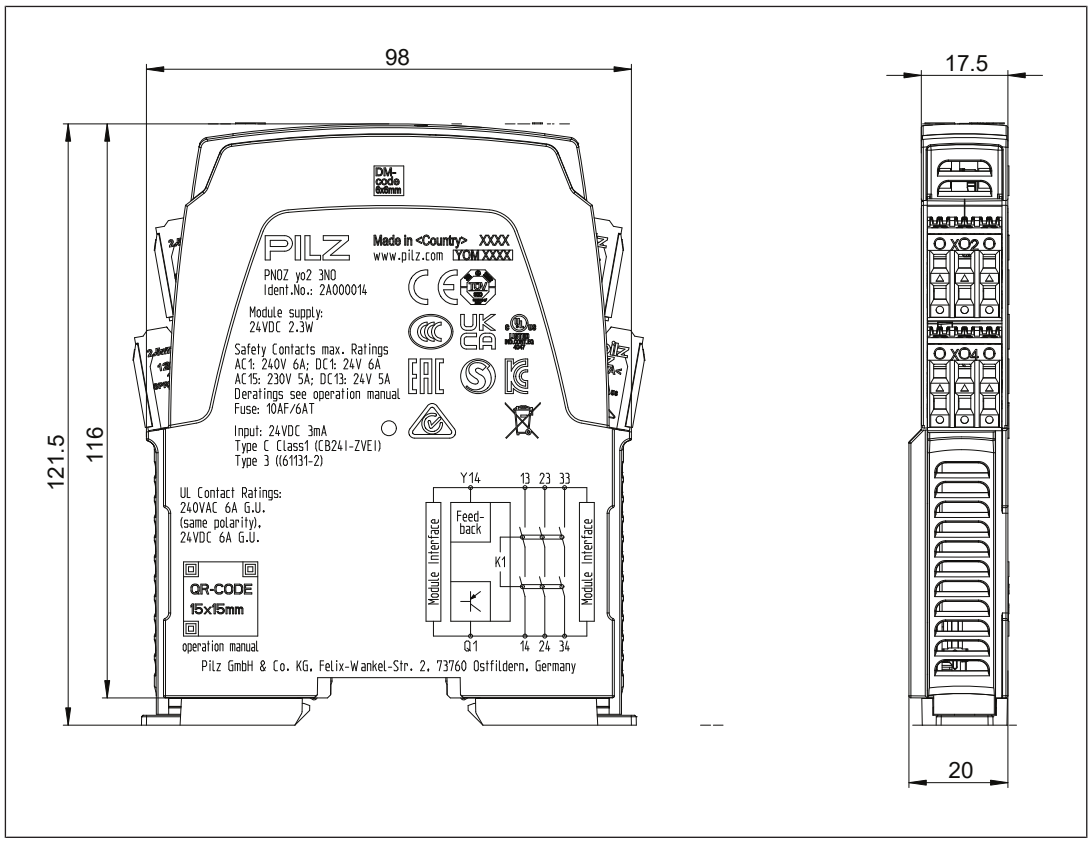

15.6.5 Technical details

General	
Certifications	**CE, EAC (Eurasian), TÜV, cULus Listed**
Electrical data	
Supply voltage	
for	**Module supply**
internal	**via head module**
Voltage	**24 V**
Kind	**DC**
Current consumption	**125 mA**
Duty cycle	**100 %**
Status indicator	**LED**
Permitted loads	**inductive, resistive**
Inputs	
Number of feedback loop inputs	**1**
Signal output	
Quantity	**1**
Voltage	**24 V**

Signal output	
Current	**50 mA**
Residual current at "0"	**10 µA**
Max. transient pulsed current	**70 mA**
Short circuit-proof	**yes**
Relay outputs	
Number of output contacts	
Safety contacts (N/O), instantaneous	**3**
Max. short circuit current IK	**1 kA**
Utilisation category	
In accordance with the standard	**EN 60947-4-1**
Utilisation category of safety contacts	
AC1 at	**240 V**
Min. current	**10 mA**
Max. current	**6 A**
Max. power	**1500 VA**
DC1 at	**24 V**
Min. current	**5 mA**
Max. current	**6 A**
Max. power	**150 W**
Utilisation category	
In accordance with the standard	**EN 60947-5-1**
Utilisation category of safety contacts	
AC15 at	**230 V**
Max. current	**5 A**
Max. power	**1.150 W**
DC13 (6 cycles/min) at	**24 V**
Max. current	**5 A**
Max. power	**120 W**
Utilisation category in accordance with UL	
Voltage	**240 V AC G.U. Resistive**
With current	**6 A**
Voltage	**24 V DC G. U. Resistive**
With current	**6 A**
Pilot Duty; R300	**24 V DC**
With current	**3 A**
Pilot Duty; B300	**230 V AC**
With current	**3 A**
External contact fuse protection, safety contacts	
In accordance with the standard	**EN 60947-5-1**
Max. melting integral	**132 A²s**
Blow-out fuse, quick	**10 A**
Blow-out fuse, slow	**6 A**
Blow-out fuse, gG	**10 A**
Contact material	**AgCuNi + 0,2 µm Au**
Potential isolation	**yes**

Conventional thermal current while loading several contacts	
Ith per contact at UB DC; AC1: 240 V, DC1: 24 V	
Conv. therm. current with 1 contact	**6 A**
Conv. therm. current with 2 contacts	**5,5 A**
Conv. therm. current with 3 contacts	**4,5 A**
Times	
Supply interruption before de-energisation	**20 ms**
Environmental data	
Ambient temperature	
In accordance with the standard	**EN 60068-2-14**
Temperature range	**-10 - 55 °C**
Storage temperature	
In accordance with the standard	**EN 60068-2-1/-2**
Temperature range	**-40 - 85 °C**
Climatic suitability	
In accordance with the standard	**EN 60068-2-78**
Condensation during operation	**Not permitted**
EMC	**EN 60947-5-1, EN 61000-6-2, EN 61000-6-4, EN 61326-3-1**
Vibration	
In accordance with the standard	**EN 60068-2-6**
Frequency	**10 - 55 Hz**
Amplitude	**0,35 mm**
Shock stress	
In accordance with the standard	**EN 60068-2-27**
Acceleration	**15g**
Duration	**11 ms**
Airgap creepage	
In accordance with the standard	**EN 60947-5-1**
Overvoltage category	**III**
Pollution degree	**2**
Protection type	
In accordance with the standard	**EN 60529**
Housing	**IP20**
Terminals	**IP20**
Mounting area (e.g. control cabinet)	**IP54**
Potential isolation	
Potential isolation between	**Output and system voltage**
Type of potential isolation	**Protective separation**
Rated insulation voltage	**250 V**
Rated surge voltage	**6000 V**
Mechanical data	
Mounting position	**Any**
Mechanical life	**10,000,000 cycles**

Mechanical data	
DIN rail	
Top hat rail	**35 x 7,5 EN 50022**
Recess width	**27 mm**
Material	
Bottom	**PC**
Top	**PC**
Connection type	**Spring-loaded terminal, screw terminal**
Mounting type	**plug-in**
Conductor cross section with screw terminals	
1 core flexible	**0,25 - 2,5 mm², 24 - 12 AWG**
2 core with the same cross section, flexible with crimp connectors, no plastic sleeve	**0,25 - 1 mm², 24 - 16 AWG**
2 core with the same cross section, flexible without crimp connectors or with TWIN crimp connectors	**0,25 - 1,5 mm², 24 - 16 AWG**
Torque setting with screw terminals	**0,5 Nm**
Stripping length with screw terminals	**8 mm**
Conductor cross section with spring-loaded terminals: Flexible with/without crimp connector	**0,2 - 2,5 mm², 24 - 12 AWG**
Spring-loaded terminals: Terminal points per connection	**2**
Stripping length with spring-loaded terminals	**9 mm**
Dimensions	
Height	**98 mm**
Width	**17,5 mm**
Depth	**121 mm**
Weight	**113 g**

Where standards are undated, the 2021-01 latest editions shall apply.

15.6.6 Safety characteristic data



NOTICE

You must comply with the safety characteristic data in order to achieve the required safety level for your plant/machine.

Operating mode	EN ISO 13849-1: 2015 PL	EN ISO 13849-1: 2015 Category	EN 62061 SIL CL	EN 62061 PFH_D [1/h]	IEC 61511 SIL	IEC 61511 PFD	EN ISO 13849-1: 2015 T_M [year]
2-channel	**PL e**	**Cat. 4**	**SIL CL 3**	**8,75E-10**	**SIL 3**	**7,21E-05**	**20**

Explanatory notes for the safety-related characteristic data:

- The SIL CL value in accordance with EN 62061 corresponds to the SIL value in accordance with EN 61508.

- T_M is the maximum mission time in accordance with EN ISO 13849-1. The value also applies as the retest interval in accordance with EN 61508-6 and IEC 61511 and as the proof test interval and mission time in accordance with EN 62061.
- These characteristic data also apply in applications with feedback loop

Additional information for applications in accordance with IEC 61511:

- Hardware fault tolerance: 1
- Subsystem of type B
- Safety function: safe shutdown

All the units used within a safety function must be considered when calculating the safety characteristic data.



INFORMATION

A safety function's SIL/PL values are **not** identical to the SIL/PL values of the units that are used and may be different. We recommend that you use the PAScal software tool to calculate the safety function's SIL/PL values.

15.6.7 Classification according to ZVEI, CB24I

The following tables describe the classes and specific values of the product interface and the classes of interfaces compatible with it. The classification is described in the ZVEI position paper "Classification of Binary 24 V Interfaces - Functional Safety aspects covered by dynamic testing".

Relay outputs	
Interfaces	
Source	
Interface	Module
Class	A
Drain	
Interface	Actuator
Class	A
Source parameters	
Min. switching voltage	12 V
Max. switching voltage	250 V
Min. switching current	5 mA
Max. switching current	6 A
Potential isolation	yes

15.6.8 Supplementary data

15.6.8.1 Permitted operating height

The values stated in the technical details apply to the use of the device in operating heights up to max. 2000 m above sea level. When used in greater heights, constraints have to be taken into account:

- Permitted maximum operating height 5000 m

Reduction of the voltage at the relay outputs at U_B = 30 V depending on the operating height

Prerequisite:

- Overvoltage category: III
- Pollution degree: 2

Maximum operating height	Max. voltage at the relay output
2000 m	300 V
3000 m	150 V
4000 m	150 V
5000 m	150 V

- From an operating height of 2000 m the max. permitted ambient temperature is reduced by 0.5 °C/100 m

Operating height	Permitted ambient temperature
3000 m	50 °C
4000 m	45 °C
5000 m	40 °C

15.6.8.2 Service life graph



CAUTION!

It is essential to consider the relay's service life graphs. The relay outputs' safety-related characteristic data is only valid if the values in the service life graphs are met.

The PFH value depends on the switch frequency and the load of the relay output.
If the service life graphs are not accessible, the stated PFH value can be used irrespective of the switch frequency and the load, as the PFH value already considers the relay's B10d value as well as the failure rates of the other components.

The service life graphs indicate the number of cycles from which failures due to wear must be expected. The wear is mainly caused by the electrical load; the mechanical load is negligible.

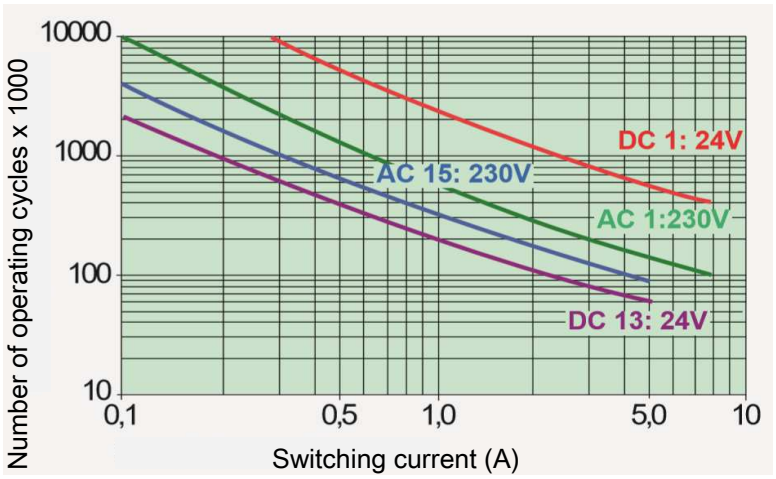

Example

- Inductive load: 0.3 A
- Utilisation category: AC15
- Contact service life: 1 000 000 cycles

Provided the application to be implemented requires fewer than 1 000 000 cycles, the PFH value (see Technical details [96]) can be used in the calculation.

To increase the service life, sufficient spark suppression must be provided on all output contacts. With capacitive loads, any power surges that occur must be noted. With DC contactors, use flywheel diodes for spark suppression.

15.6.9 Order reference

15.6.9.1 Product

Product type	Features	Order no.
PNOZ yo2 3NO	Expansion module with 1 output function, instantaneous relay outputs	2A000014

15.6.9.2 Accessories

Connection terminals

Product type	Features	Order no.
PNOZ s Setscrew terminals	1 set of screw terminals, 17.5 mm	750003
PNOZ s Setspring loaded terminals	1 set of spring-loaded terminals, 17.5 mm	751003

15.7 PNOZ yo3 1SO 1SO t

15.7.1 Device features

- Expansion module for safe applications of the myPNOZ
- 1 output function with 1 safe semiconductor output, instantaneous, and 1 input for feedback loop
- 1 output function with 1 safe semiconductor output, delayed, and 1 input for feedback loop
- Delay time can be set via rotary switches
- Off or on delay can be selected
- 1 signal output, e.g. for display
- Supply voltage connection for the semiconductor outputs
- LED display for:
  - Module status
  - Switch state of the outputs



NOTICE

Required firmware version of the head module: ≥ 1.0

15.7.2 Front view

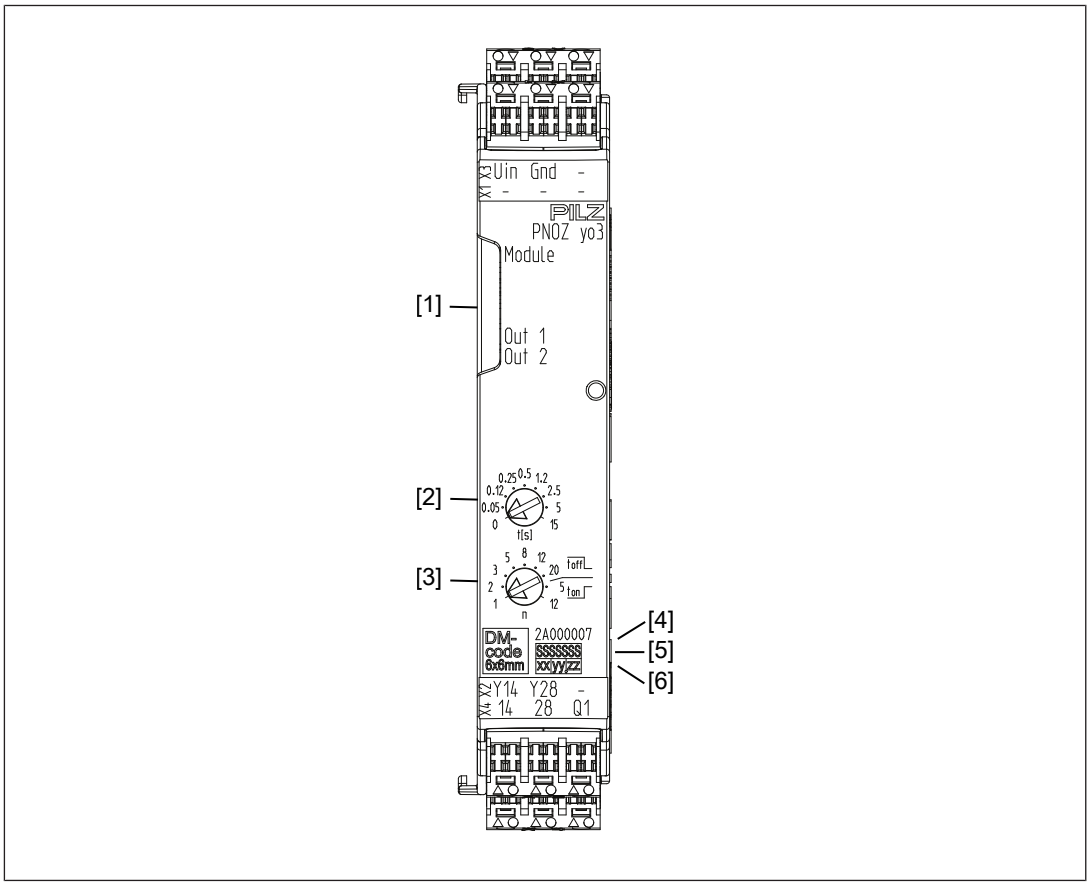

Legend

[1] LEDs for diagnostics

[2] Rotary switch for time value for delay

[3] Rotary switch for factor for delay and delay type (on or off)

[4] Order number

[5] Serial number

[6] Device version

15.7.3 Block diagram

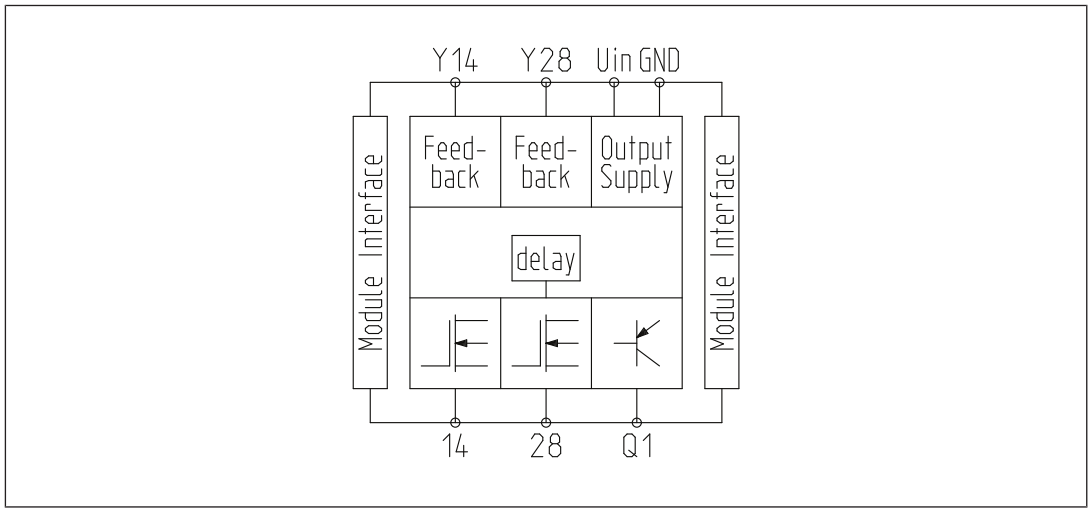

15.7.4 Dimensions

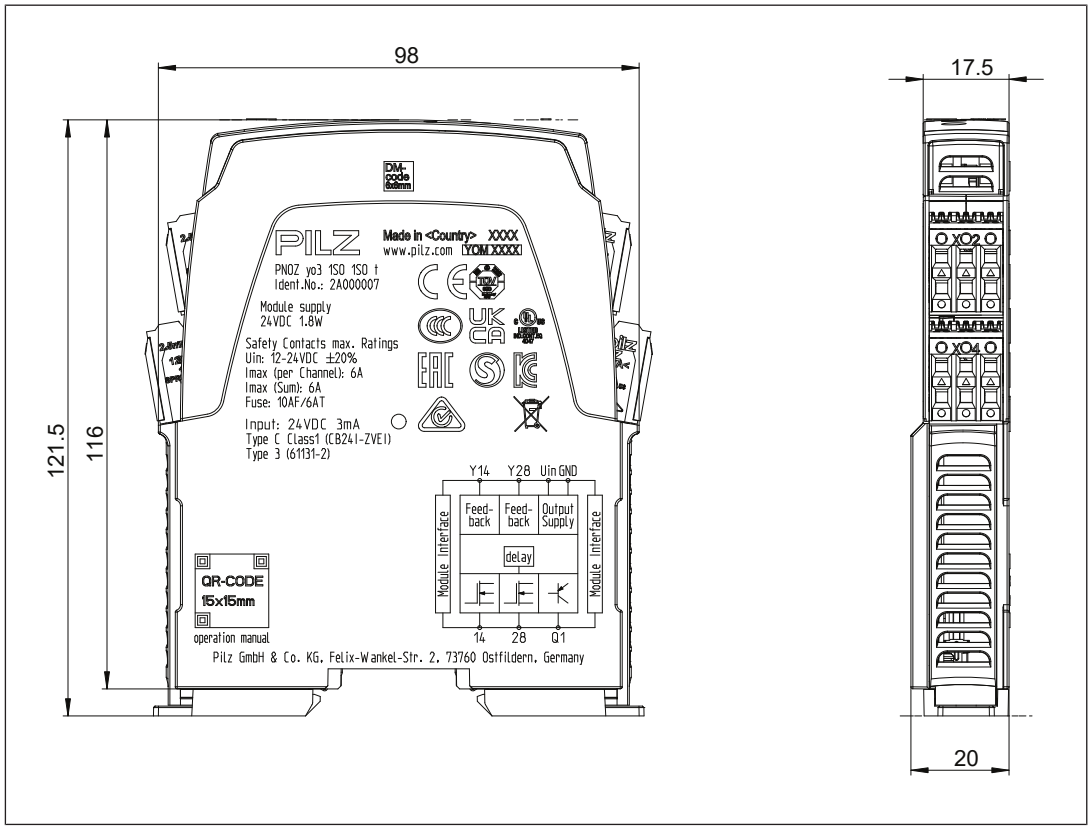

15.7.5 Technical details

General	
Certifications	**CE, EAC (Eurasian), TÜV, cULus Listed**
Electrical data	
Supply voltage	
for	**Supply to the SC outputs**
Voltage	**12 - 24 V**
Kind	**DC**
Voltage tolerance	**-20 %/+20 %**
Max. continuous current that the external power supply must provide	**6 A**
Potential isolation	**No**
Supply voltage	
for	**Module supply**
internal	**via head module**
Voltage	**24 V**
Kind	**DC**
Current consumption	**105 mA**
Duty cycle	**100 %**
Status indicator	**LED**
Permitted loads	**inductive, capacitive, resistive**
Inputs	
Number of feedback loop inputs	**1**
Semiconductor outputs	
Number of safety outputs	
Delayed	**1**
Instantaneous	**1**
Switching capability	
Voltage	**12 - 24 V**
Current	**6 A**
Residual current at "0" signal	**0,5 mA**
Max. transient pulsed current	**100 A**
Max. capacitive load	**2,5 µF**
Max. internal voltage drop	**160 mV**
Max. duration of off time during self test	**500 µs**
Potential isolation	**No**
Short circuit-proof	**yes**
Signal output	
Quantity	**1**
Voltage	**24 V**
Current	**50 mA**
Residual current at "0"	**10 µA**
Max. transient pulsed current	**70 mA**
Short circuit-proof	**yes**

Times	
Selectable delay time when switching on	**0,25 s, 0,6 s, 1,25 s, 1,44 s, 12,5 s, 14,4 s, 180 s, 2,5 s, 25 s, 3 s, 30 s, 6 s, 60 s, 75 s**
Selectable delay time when switching off	**0,05 s, 0,1 s, 0,12 s, 0,15 s, 0,24 s, 0,25 s, 0,36 s, 0,4 s, 0,5 s, 0,6 s, 0,75 s, 0,96 s, 1 s, 1,2 s, 1,25 s, 1,44 s, 1,5 s, 10 s, 100 s, 12,5 s, 120 s, 14,4 s, 15 s, 180 s, 2 s, 2,4 s, 2,5 s, 20 s, 24 s, 25 s, 3 s, 3,6 s, 30 s, 300 s, 4 s, 40 s, 45 s, 5 s, 6 s, 60 s, 7,5 s, 75 s, 9,6 s**
Time accuracy	**+/-1,5 %**
Supply interruption before de-energisation	**20 ms**
Environmental data	
Ambient temperature	
In accordance with the standard	**EN 60068-2-14**
Temperature range	**-10 - 55 °C**
Storage temperature	
In accordance with the standard	**EN 60068-2-1/-2**
Temperature range	**-40 - 85 °C**
Climatic suitability	
In accordance with the standard	**EN 60068-2-78**
Condensation during operation	**Not permitted**
Max. operating height above sea level	**5000 m**
EMC	**EN 60947-5-1, EN 61000-6-2, EN 61000-6-4, EN 61326-3-1**
Vibration	
In accordance with the standard	**EN 60068-2-6**
Frequency	**10 - 55 Hz**
Amplitude	**0,35 mm**
Shock stress	
In accordance with the standard	**EN 60068-2-27**
Acceleration	**15g**
Duration	**11 ms**
Airgap creepage	
In accordance with the standard	**EN 60947-5-1**
Overvoltage category	**III**
Pollution degree	**2**
Protection type	
In accordance with the standard	**EN 60529**
Housing	**IP20**
Terminals	**IP20**
Mounting area (e.g. control cabinet)	**IP54**
Mechanical data	
Mounting position	**Any**
DIN rail	
Top hat rail	**35 x 7,5 EN 50022**
Recess width	**27 mm**

Mechanical data	
Material	
Bottom	**PC**
Top	**PC**
Connection type	**Spring-loaded terminal, screw terminal**
Mounting type	**plug-in**
Conductor cross section with screw terminals	
1 core flexible	**0,25 - 2,5 mm², 24 - 12 AWG**
2 core with the same cross section, flexible with crimp connectors, no plastic sleeve	**0,25 - 1 mm², 24 - 16 AWG**
2 core with the same cross section, flexible without crimp connectors or with TWIN crimp connectors	**0,25 - 1,5 mm², 24 - 16 AWG**
Torque setting with screw terminals	**0,5 Nm**
Stripping length with screw terminals	**8 mm**
Conductor cross section with spring-loaded terminals: Flexible with/without crimp connector	**0,2 - 2,5 mm², 24 - 12 AWG**
Spring-loaded terminals: Terminal points per connection	**2**
Stripping length with spring-loaded terminals	**9 mm**
Dimensions	
Height	**98 mm**
Width	**17,5 mm**
Depth	**121 mm**
Weight	**87 g**

Where standards are undated, the 2021-01 latest editions shall apply.

15.7.6 Safety characteristic data

NOTICE

You must comply with the safety characteristic data in order to achieve the required safety level for your plant/machine.

Unit	Operating mode	EN ISO 13849-1: 2015 PL	EN ISO 13849-1: 2015 Category	EN 62061 SIL CL	EN 62061 PFH_D [1/h]	IEC 61511 SIL	IEC 61511 PFD	EN ISO 13849-1: 2015 T_M [year]
SC output, single	**2-channel**	**PL e**	**Cat. 4**	**SIL CL 3**	**6,44E-10**	**SIL 3**	**5,43E-05**	**20**
SC output, redundant	**2-channel**	**PL e**	**Cat. 4**	**SIL CL 3**	**9,68E-10**	**SIL 3**	**8,16E-05**	**20**

Explanatory notes for the safety-related characteristic data:

- The SIL CL value in accordance with EN 62061 corresponds to the SIL value in accordance with EN 61508.
- T_M is the maximum mission time in accordance with EN ISO 13849-1. The value also applies as the retest interval in accordance with EN 61508-6 and IEC 61511 and as the proof test interval and mission time in accordance with EN 62061.
- These characteristic data also apply in applications with feedback loop

Additional information for applications in accordance with IEC 61511:

- Hardware fault tolerance: 1
- Subsystem of type B
- Safety function: safe shutdown

All the units used within a safety function must be considered when calculating the safety characteristic data.

INFORMATION

A safety function's SIL/PL values are **not** identical to the SIL/PL values of the units that are used and may be different. We recommend that you use the PAScal software tool to calculate the safety function's SIL/PL values.

15.7.7 Classification according to ZVEI, CB24I

The following tables describe the classes and specific values of the product interface and the classes of interfaces compatible with it. The classification is described in the ZVEI position paper "Classification of Binary 24 V Interfaces - Functional Safety aspects covered by dynamic testing".

Single-pole output	
Interfaces	
Source	
Interface	Module
Class	C2
Drain	
Interface	Actuator
Class	C1, C2
Source parameters	
Max. test pulse duration	500 µs
Max. rated current	6 A
Max. capacitive load	2,5 µF

15.7.8 Order reference

15.7.8.1 Product

Product type	Features	Order no.
PNOZ yo3 1SO 1SO t	Expansion module with 2 output functions, instantaneous/ delayed semiconductor output	2A000007

15.7.8.2 Accessories

Connection terminals

Product type	Features	Order no.
PNOZ s Setscrew terminals	1 set of screw terminals, 17.5 mm	750003
PNOZ s Setspring loaded terminals	1 set of spring-loaded terminals, 17.5 mm	751003

15.8 PNOZ yo4 3NO t

15.8.1 Device features

- Expansion module for safe applications of the myPNOZ
- 1 output function with 3 safe relay outputs, positive-guided, delayed, and 1 input for feedback loop
- Delay time can be set via rotary switches
- Off or on delay can be selected
- 1 signal output, e.g. for display
- LED display for:
  - Module status
  - Switch state of the outputs



NOTICE

Required firmware version of the head module: ≥ 1.0

15.8.2 Front view

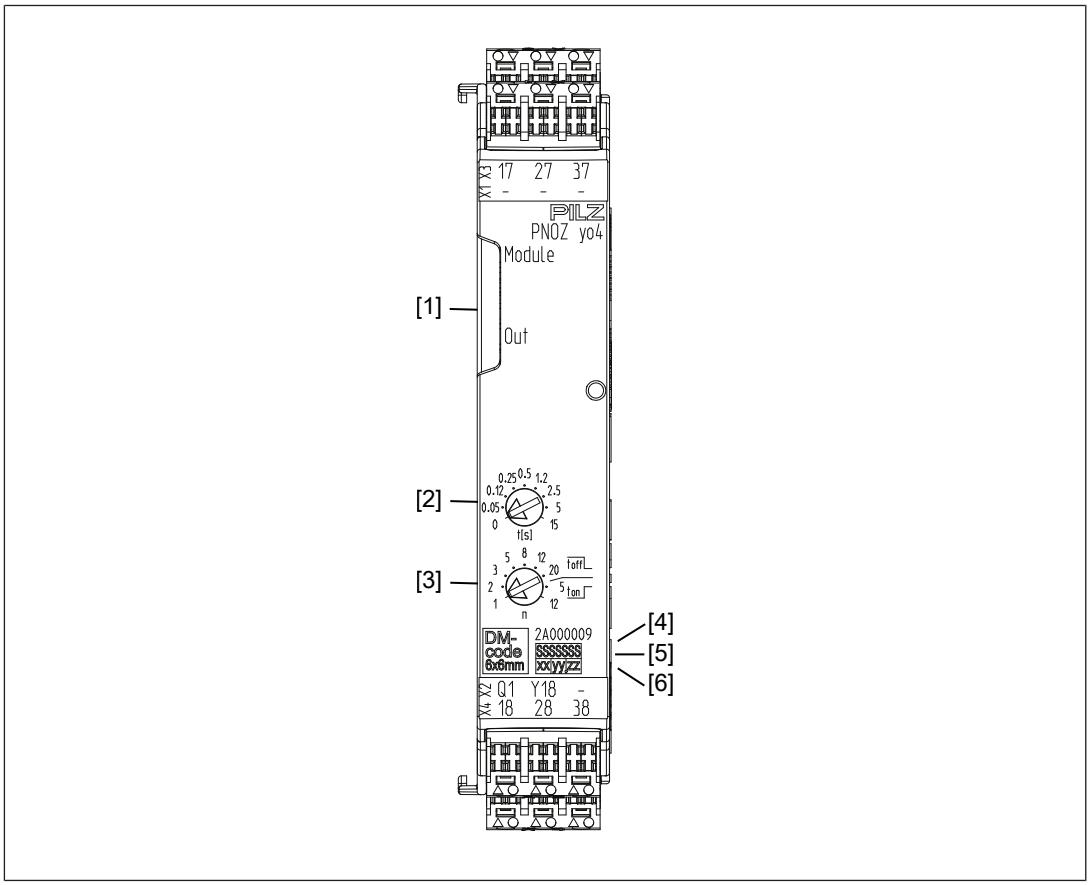

Legend

[1] LEDs for diagnostics

[2] Rotary switch for time value for delay

[3] Rotary switch for factor for delay and delay type (on or off)

[4] Order number

[5] Serial number

[6] Device version

15.8.3 Block diagram

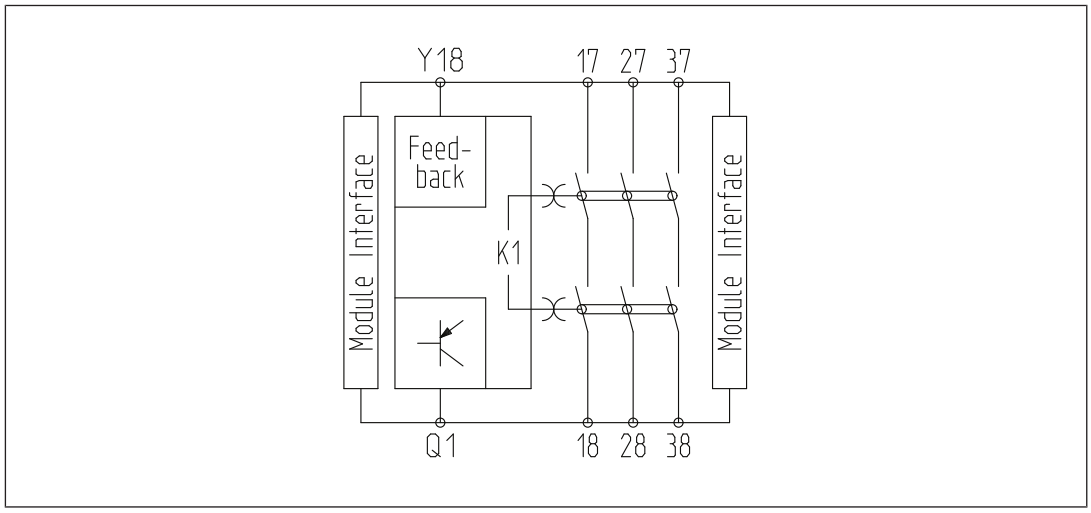

15.8.4 Dimensions

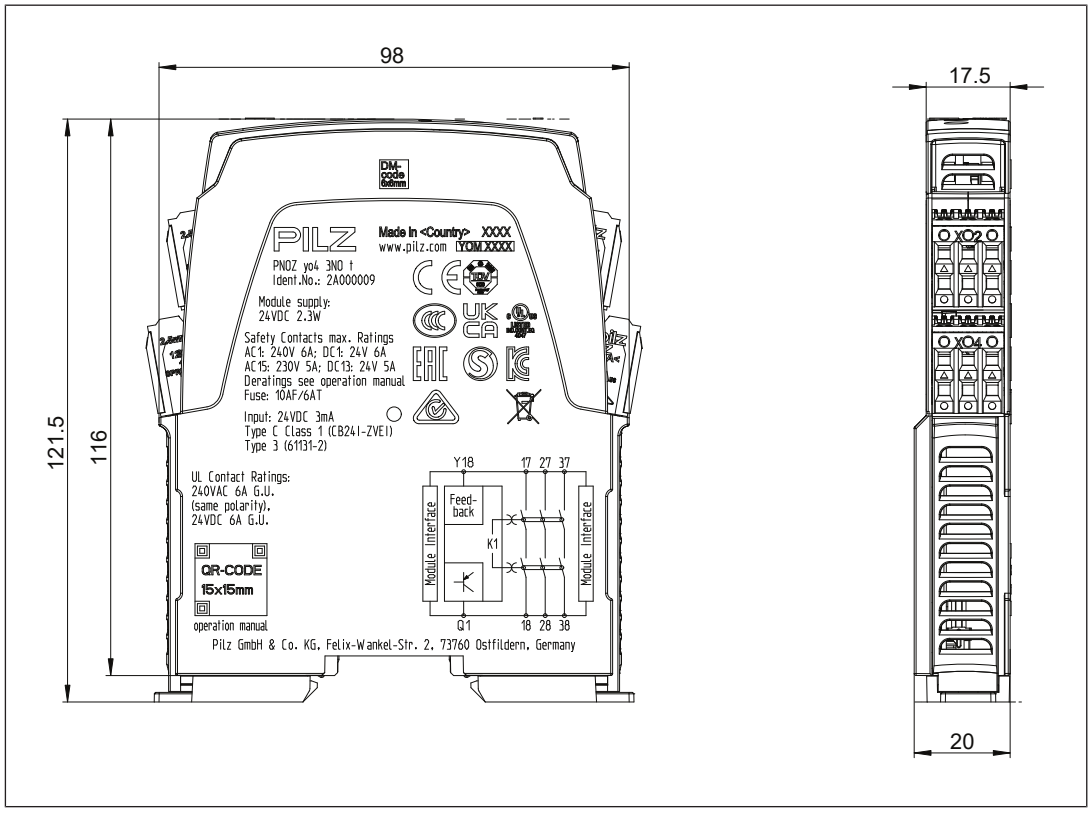

15.8.5 Technical details

General	
Certifications	**CE, EAC (Eurasian), TÜV, cULus Listed**
Electrical data	
Supply voltage	
for	**Module supply**
internal	**via head module**
Voltage	**24 V**
Kind	**DC**
Current consumption	**125 mA**
Duty cycle	**100 %**
Status indicator	**LED**
Permitted loads	**inductive, resistive**
Inputs	
Number of feedback loop inputs	**1**
Signal output	
Quantity	**1**
Voltage	**24 V**
Current	**50 mA**
Residual current at "0"	**10 µA**
Max. transient pulsed current	**70 mA**
Short circuit-proof	**yes**
Relay outputs	
Number of output contacts	
Safety contacts (N/O), delayed	**3**
Max. short circuit current IK	**1 kA**
Utilisation category	
In accordance with the standard	**EN 60947-4-1**
Utilisation category of safety contacts	
AC1 at	**240 V**
Min. current	**10 mA**
Max. current	**6 A**
Max. power	**1500 VA**
DC1 at	**24 V**
Min. current	**5 mA**
Max. current	**6 A**
Max. power	**150 W**
Utilisation category	
In accordance with the standard	**EN 60947-5-1**

Relay outputs	
Utilisation category of safety contacts	
AC15 at	**230 V**
Max. current	**5 A**
Max. power	**1.150 W**
DC13 (6 cycles/min) at	**24 V**
Max. current	**5 A**
Max. power	**120 W**
Utilisation category in accordance with UL	
Voltage	**240 V AC G.U. Resistive**
With current	**6 A**
Voltage	**24 V DC G. U. Resistive**
With current	**6 A**
Pilot Duty; R300	**24 V DC**
With current	**3 A**
Pilot Duty; B300	**230 V AC**
With current	**3 A**
External contact fuse protection, safety contacts	
In accordance with the standard	**EN 60947-5-1**
Max. melting integral	**132 A²s**
Blow-out fuse, quick	**10 A**
Blow-out fuse, slow	**6 A**
Blow-out fuse, gG	**10 A**
Contact material	**AgCuNi + 0,2 µm Au**
Potential isolation	**yes**
Conventional thermal current while loading several contacts	
Ith per contact at UB DC; AC1: 240 V, DC1: 24 V	
Conv. therm. current with 1 contact	**6 A**
Conv. therm. current with 2 contacts	**5,5 A**
Conv. therm. current with 3 contacts	**4,5 A**
Times	
Selectable delay time when switching on	**0,25 s, 0,6 s, 1,25 s, 1,44 s, 12,5 s, 14,4 s, 180 s, 2,5 s, 25 s, 3 s, 30 s, 6 s, 60 s, 75 s**
Selectable delay time when switching off	**0,05 s, 0,1 s, 0,12 s, 0,15 s, 0,24 s, 0,25 s, 0,36 s, 0,4 s, 0,5 s, 0,6 s, 0,75 s, 0,96 s, 1 s, 1,2 s, 1,25 s, 1,44 s, 1,5 s, 10 s, 100 s, 12,5 s, 120 s, 14,4 s, 15 s, 180 s, 2 s, 2,4 s, 2,5 s, 20 s, 24 s, 25 s, 3 s, 3,6 s, 30 s, 300 s, 4 s, 40 s, 45 s, 5 s, 6 s, 60 s, 7,5 s, 75 s, 9,6 s**
Time accuracy	**+/-1,5 %**
Supply interruption before de-energisation	**20 ms**
Environmental data	
Ambient temperature	
In accordance with the standard	**EN 60068-2-14**
Temperature range	**-10 - 55 °C**

Environmental data	
Storage temperature	
In accordance with the standard	**EN 60068-2-1/-2**
Temperature range	**-40 - 85 °C**
Climatic suitability	
In accordance with the standard	**EN 60068-2-78**
Condensation during operation	**Not permitted**
EMC	**EN 60947-5-1, EN 61000-6-2, EN 61000-6-4, EN 61326-3-1**
Vibration	
In accordance with the standard	**EN 60068-2-6**
Frequency	**10 - 55 Hz**
Amplitude	**0,35 mm**
Shock stress	
In accordance with the standard	**EN 60068-2-27**
Acceleration	**15g**
Duration	**11 ms**
Airgap creepage	
In accordance with the standard	**EN 60947-5-1**
Overvoltage category	**III**
Pollution degree	**2**
Protection type	
In accordance with the standard	**EN 60529**
Housing	**IP20**
Terminals	**IP20**
Mounting area (e.g. control cabinet)	**IP54**
Potential isolation	
Potential isolation between	**Output and system voltage**
Type of potential isolation	**Protective separation**
Rated insulation voltage	**250 V**
Rated surge voltage	**6000 V**
Mechanical data	
Mounting position	**Any**
Mechanical life	**10,000,000 cycles**
DIN rail	
Top hat rail	**35 x 7,5 EN 50022**
Recess width	**27 mm**
Material	
Bottom	**PC**
Top	**PC**
Connection type	**Spring-loaded terminal, screw terminal**
Mounting type	**plug-in**

Mechanical data	
Conductor cross section with screw terminals	
1 core flexible	**0,25 - 2,5 mm², 24 - 12 AWG**
2 core with the same cross section, flexible with crimp connectors, no plastic sleeve	**0,25 - 1 mm², 24 - 16 AWG**
2 core with the same cross section, flexible without crimp connectors or with TWIN crimp connectors	**0,25 - 1,5 mm², 24 - 16 AWG**
Torque setting with screw terminals	**0,5 Nm**
Stripping length with screw terminals	**8 mm**
Conductor cross section with spring-loaded terminals: Flexible with/without crimp connector	**0,2 - 2,5 mm², 24 - 12 AWG**
Spring-loaded terminals: Terminal points per connection	**2**
Stripping length with spring-loaded terminals	**9 mm**
Dimensions	
Height	**98 mm**
Width	**17,5 mm**
Depth	**121 mm**
Weight	**116 g**

Where standards are undated, the 2021-01 latest editions shall apply.

15.8.6 Safety characteristic data



NOTICE

You must comply with the safety characteristic data in order to achieve the required safety level for your plant/machine.

Operating mode	EN ISO 13849-1: 2015 PL	EN ISO 13849-1: 2015 Category	EN 62061 SIL CL	EN 62061 PFH_D [1/h]	IEC 61511 SIL	IEC 61511 PFD	EN ISO 13849-1: 2015 T_M [year]
2-channel	**PL e**	**Cat. 4**	**SIL CL 3**	**8,75E-10**	**SIL 3**	**7,21E-05**	**20**

Explanatory notes for the safety-related characteristic data:

- The SIL CL value in accordance with EN 62061 corresponds to the SIL value in accordance with EN 61508.
- T_M is the maximum mission time in accordance with EN ISO 13849-1. The value also applies as the retest interval in accordance with EN 61508-6 and IEC 61511 and as the proof test interval and mission time in accordance with EN 62061.
- These characteristic data also apply in applications with feedback loop

Additional information for applications in accordance with IEC 61511:

- Hardware fault tolerance: 1
- Subsystem of type B
- Safety function: safe shutdown

All the units used within a safety function must be considered when calculating the safety characteristic data.



INFORMATION

A safety function's SIL/PL values are **not** identical to the SIL/PL values of the units that are used and may be different. We recommend that you use the PAScal software tool to calculate the safety function's SIL/PL values.

15.8.7 Classification according to ZVEI, CB24I

The following tables describe the classes and specific values of the product interface and the classes of interfaces compatible with it. The classification is described in the ZVEI position paper "Classification of Binary 24 V Interfaces - Functional Safety aspects covered by dynamic testing".

Relay outputs	
Interfaces	
Source	
Interface	Module
Class	A
Drain	
Interface	Actuator
Class	A
Source parameters	
Min. switching voltage	12 V
Max. switching voltage	250 V
Min. switching current	5 mA
Max. switching current	6 A
Potential isolation	yes

15.8.8 Supplementary data

15.8.8.1 Permitted operating height

The values stated in the technical details apply to the use of the device in operating heights up to max. 2000 m above sea level. When used in greater heights, constraints have to be taken into account:

- Permitted maximum operating height 5000 m

Reduction of the voltage at the relay outputs at U_B = 30 V depending on the operating height

Prerequisite:

- Overvoltage category: III
- Pollution degree: 2

Maximum operating height	Max. voltage at the relay output
2000 m	300 V
3000 m	150 V
4000 m	150 V
5000 m	150 V

- From an operating height of 2000 m the max. permitted ambient temperature is reduced by 0.5 °C/100 m

Operating height	Permitted ambient temperature
3000 m	50 °C
4000 m	45 °C
5000 m	40 °C

15.8.8.2 Service life graph



CAUTION!

It is essential to consider the relay's service life graphs. The relay outputs' safety-related characteristic data is only valid if the values in the service life graphs are met.

The PFH value depends on the switch frequency and the load of the relay output.
If the service life graphs are not accessible, the stated PFH value can be used irrespective of the switch frequency and the load, as the PFH value already considers the relay's B10d value as well as the failure rates of the other components.

The service life graphs indicate the number of cycles from which failures due to wear must be expected. The wear is mainly caused by the electrical load; the mechanical load is negligible.

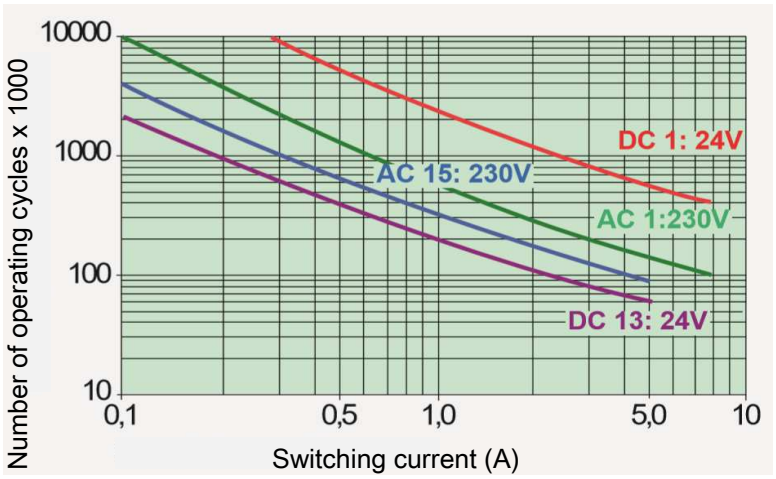

Example

- Inductive load: 0.3 A
- Utilisation category: AC15
- Contact service life: 1 000 000 cycles

Provided the application to be implemented requires fewer than 1 000 000 cycles, the PFH value (see Technical details [📖 114]) can be used in the calculation.

To increase the service life, sufficient spark suppression must be provided on all output contacts. With capacitive loads, any power surges that occur must be noted. With DC contactors, use flywheel diodes for spark suppression.

15.8.9 Order reference

15.8.9.1 Product

Product type	Features	Order no.
PNOZ yo4 3NO t	Expansion module with 1 output function, delayed relay outputs	2A000009

15.8.9.2 Accessories

Connection terminals

Product type	Features	Order no.
PNOZ s Setscrew terminals	1 set of screw terminals, 17.5 mm	750003
PNOZ s Setspring loaded terminals	1 set of spring-loaded terminals, 17.5 mm	751003

15.9 PNOZ yio1 2DI 2SO

15.9.1 Device features

- Expansion module for safe applications of the myPNOZ
- 1 input function to connect E-STOP pushbutton, safety gate switch or light curtain and start button
- Start type can be set via rotary switch
- 2 output functions, each with 1 safe semiconductor output, instantaneous, and 1 input for feedback loop
- Supply voltage connection for the semiconductor outputs
- 1 signal output, e.g. for display
- LED display for:
  - Module status
  - State of the inputs
  - State of the start input
  - Switch state of the outputs



NOTICE

Required firmware version of the head module: ≥ 1.0

15.9.2 Front view

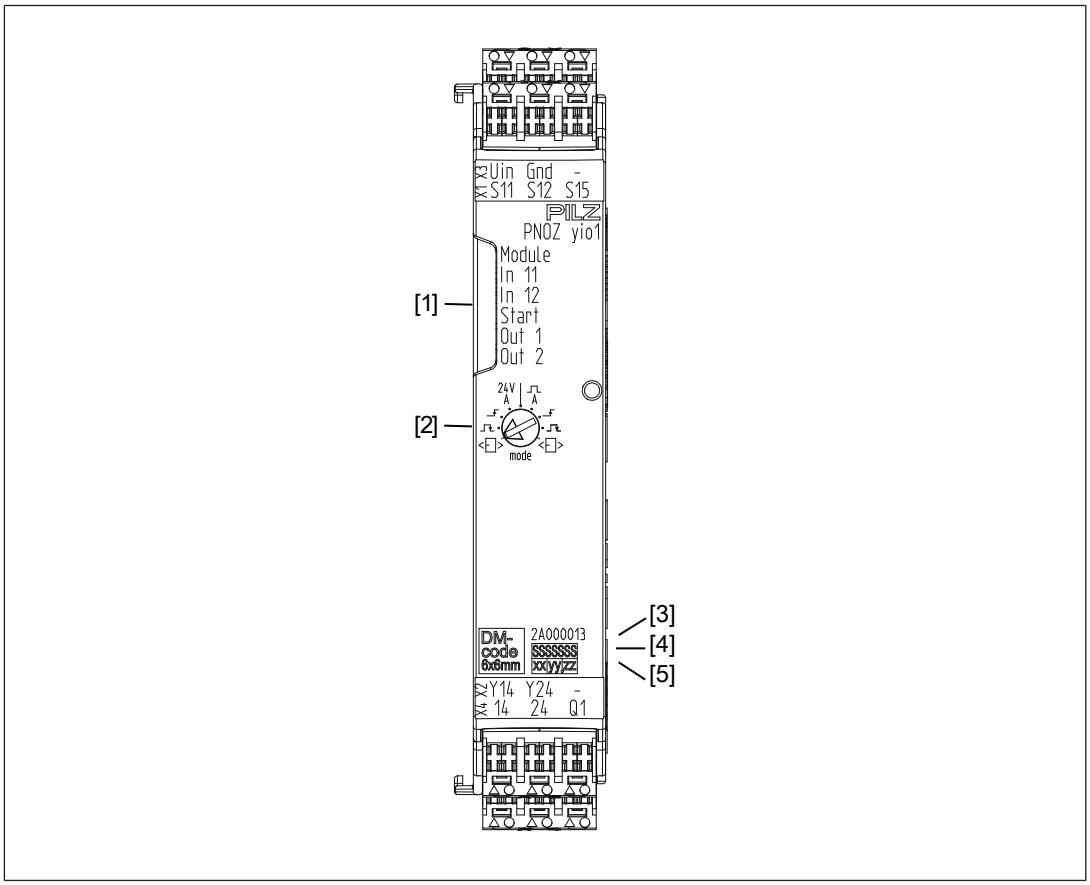

Legend

[1] LEDs for diagnostics

[2] Rotary switch for start types and test pulse evaluation (S11, S12)

[3] Order number

[4] Serial number

[5] Device version

15.9.3 Block diagram

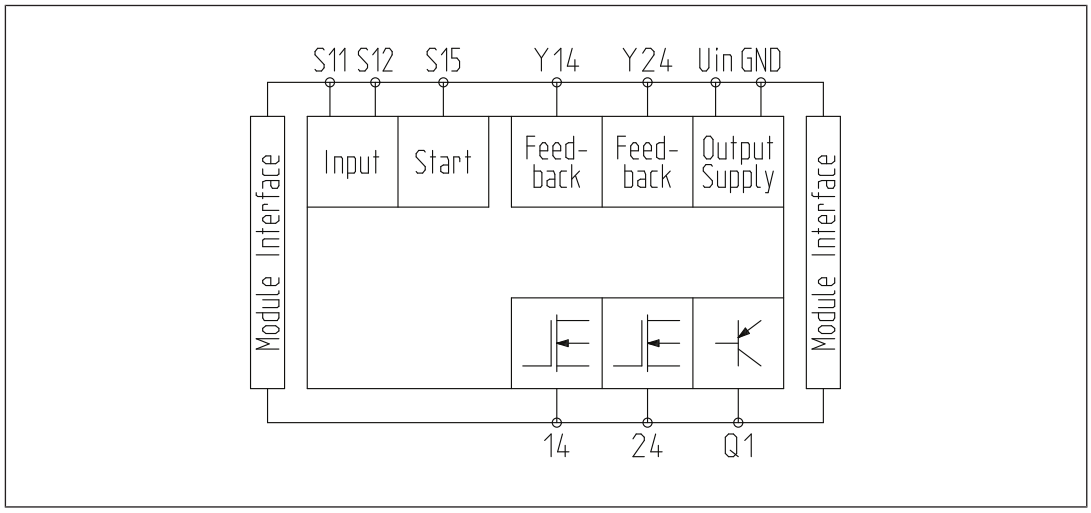

15.9.4 Dimensions

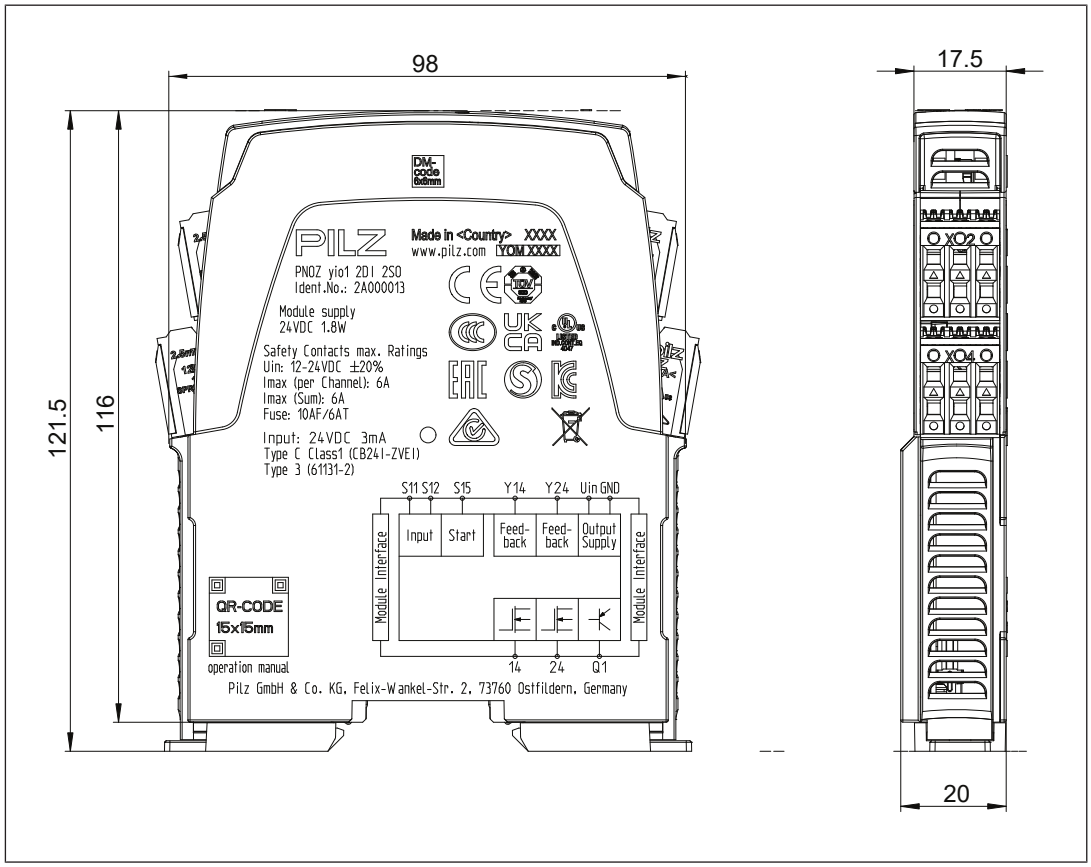

15.9.5 Technical details

General	
Certifications	**CE, EAC (Eurasian), TÜV, cULus Listed**
Electrical data	
Supply voltage	
for	**Supply to the SC outputs**
Voltage	**12 - 24 V**
Kind	**DC**
Voltage tolerance	**-20 %/+20 %**
Max. continuous current that the external power supply must provide	**6 A**
Potential isolation	**No**
Supply voltage	
for	**Module supply**
internal	**via head module**
Voltage	**24 V**
Kind	**DC**
Current consumption	**105 mA**
Duty cycle	**100 %**
Status indicator	**LED**
Permitted loads	**inductive, capacitive, resistive**
Inputs	
Number	**2**
Number of start inputs	**1**
Number of feedback loop inputs	**1**
Input voltage in accordance with EN 61131-2 Type 1	**24 V DC**
Input current at rated voltage	**2,8 mA**
Input current range	**2 - 3 mA**
Pulse suppression	**1 ms**
Maximum input delay	**1,5 ms**
Potential isolation	**No**
Semiconductor outputs	
Number of safety outputs	
Instantaneous	**2**
Switching capability	
Voltage	**12 - 24 V**
Current	**6 A**
Residual current at "0" signal	**0,5 mA**
Max. transient pulsed current	**100 A**
Max. capacitive load	**2,5 µF**
Max. internal voltage drop	**160 mV**
Max. duration of off time during self test	**500 µs**
Potential isolation	**No**
Short circuit-proof	**yes**

Signal output	
Quantity	**1**
Voltage	**24 V**
Current	**50 mA**
Residual current at "0"	**10 µA**
Max. transient pulsed current	**70 mA**
Short circuit-proof	**yes**
Times	
Recovery time at max. switching frequency 1/s	
After E-STOP	**30 ms**
Waiting period with manual and monitored start	**30 ms**
Min. start pulse duration with a monitored start	
With rising edge	**100 ms**
with rising and falling edge	**150 ms**
Max. start pulse duration with a monitored start	
with rising and falling edge	**2 s**
Supply interruption before de-energisation	**20 ms**
Simultaneity, input circuit	∞
Environmental data	
Ambient temperature	
In accordance with the standard	**EN 60068-2-14**
Temperature range	**-10 - 55 °C**
Storage temperature	
In accordance with the standard	**EN 60068-2-1/-2**
Temperature range	**-40 - 85 °C**
Climatic suitability	
In accordance with the standard	**EN 60068-2-78**
Condensation during operation	**Not permitted**
Max. operating height above sea level	**5000 m**
EMC	**EN 60947-5-1, EN 61000-6-2, EN 61000-6-4, EN 61326-3-1**
Vibration	
In accordance with the standard	**EN 60068-2-6**
Frequency	**10 - 55 Hz**
Amplitude	**0,35 mm**
Shock stress	
In accordance with the standard	**EN 60068-2-27**
Acceleration	**15g**
Duration	**11 ms**
Airgap creepage	
In accordance with the standard	**EN 60947-5-1**
Overvoltage category	**III**
Pollution degree	**2**

Environmental data	
Protection type	
In accordance with the standard	**EN 60529**
Housing	**IP20**
Terminals	**IP20**
Mounting area (e.g. control cabinet)	**IP54**
Mechanical data	
Mounting position	**Any**
DIN rail	
Top hat rail	**35 x 7,5 EN 50022**
Recess width	**27 mm**
Max. cable length	
Max. cable length per input	**1 km**
Material	
Bottom	**PC**
Top	**PC**
Connection type	**Spring-loaded terminal, screw terminal**
Mounting type	**plug-in**
Conductor cross section with screw terminals	
1 core flexible	**0,25 - 2,5 mm², 24 - 12 AWG**
2 core with the same cross section, flexible with crimp connectors, no plastic sleeve	**0,25 - 1 mm², 24 - 16 AWG**
2 core with the same cross section, flexible without crimp connectors or with TWIN crimp connectors	**0,25 - 1,5 mm², 24 - 16 AWG**
Torque setting with screw terminals	**0,5 Nm**
Stripping length with screw terminals	**8 mm**
Conductor cross section with spring-loaded terminals: Flexible with/without crimp connector	**0,2 - 2,5 mm², 24 - 12 AWG**
Spring-loaded terminals: Terminal points per connection	**2**
Stripping length with spring-loaded terminals	**9 mm**
Dimensions	
Height	**98 mm**
Width	**17,5 mm**
Depth	**121 mm**
Weight	**90 g**

Where standards are undated, the 2021-01 latest editions shall apply.

15.9.6 Safety characteristic data

NOTICE

You must comply with the safety characteristic data in order to achieve the required safety level for your plant/machine.

Unit	Operating mode	EN ISO 13849-1: 2015 PL	EN ISO 13849-1: 2015 Category	EN 62061 SIL CL	EN 62061 PFH_D [1/h]	IEC 61511 SIL	IEC 61511 PFD	EN ISO 13849-1: 2015 T_M [year]
Input								
Inputs	**2-channel**	**PL e**	**Cat. 4**	**SIL CL 3**	**1,93E-10**	**SIL 3**	**1,67E-05**	**20**
Output								
SC output, single	**2-channel**	**PL e**	**Cat. 4**	**SIL CL 3**	**6,44E-10**	**SIL 3**	**5,43E-05**	**20**
SC output, redundant	**2-channel**	**PL e**	**Cat. 4**	**SIL CL 3**	**9,68E-10**	**SIL 3**	**8,16E-05**	**20**

Explanatory notes for the safety-related characteristic data:

- The SIL CL value in accordance with EN 62061 corresponds to the SIL value in accordance with EN 61508.
- T_M is the maximum mission time in accordance with EN ISO 13849-1. The value also applies as the retest interval in accordance with EN 61508-6 and IEC 61511 and as the proof test interval and mission time in accordance with EN 62061.
- These characteristic data also apply in applications with feedback loop

Additional information for applications in accordance with IEC 61511:

- Hardware fault tolerance: 1
- Subsystem of type B
- Safety function: safe shutdown

All the units used within a safety function must be considered when calculating the safety characteristic data.

INFORMATION

A safety function's SIL/PL values are **not** identical to the SIL/PL values of the units that are used and may be different. We recommend that you use the PAScal software tool to calculate the safety function's SIL/PL values.

15.9.7 Classification according to ZVEI, CB24I

The following tables describe the classes and specific values of the product interface and the classes of interfaces compatible with it. The classification is described in the ZVEI position paper "Classification of Binary 24 V Interfaces - Functional Safety aspects covered by dynamic testing".

Input	
Interfaces	
Drain	
Interface	Sensor
Class	C1
Source	
Interface	Module
Class	C1, C2, C3
Drain parameters	
Test pulse duration, safety outputs	1 ms
Min. input resistance	10 kOhm
Max. capacitive load	126 nF

Single-pole output	
Interfaces	
Source	
Interface	Module
Class	C2
Drain	
Interface	Actuator
Class	C1, C2
Source parameters	
Max. test pulse duration	500 µs
Max. rated current	6 A
Max. capacitive load	2,5 µF

15.9.8 Order reference

15.9.8.1 Product

Product type	Features	Order no.
PNOZ yio1 2DI 2SO	Expansion module with 1 input function, 2 output functions, instantaneous semiconductor output	2A000013

15.9.8.2 Accessories

Connection terminals

Product type	Features	Order no.
PNOZ s Setscrew terminals	1 set of screw terminals, 17.5 mm	750003
PNOZ s Setspring loaded terminals	1 set of spring-loaded terminals, 17.5 mm	751003

15.10 PNOZ yio2 2DI 3NO

15.10.1 Device features

- Expansion module for safe applications of the myPNOZ
- 1 input function to connect E-STOP pushbutton, safety gate switch or light curtain and start button
- Start type can be set via rotary switch
- 1 output function with 3 safe relay outputs, positive-guided, instantaneous, and 1 input for feedback loop
- 1 signal output, e.g. for display
- LED display for:
  - Module status
  - State of the inputs
  - State of the start input
  - Switch state of the outputs



NOTICE

Required firmware version of the head module: ≥ 1.0

15.10.2 Front view

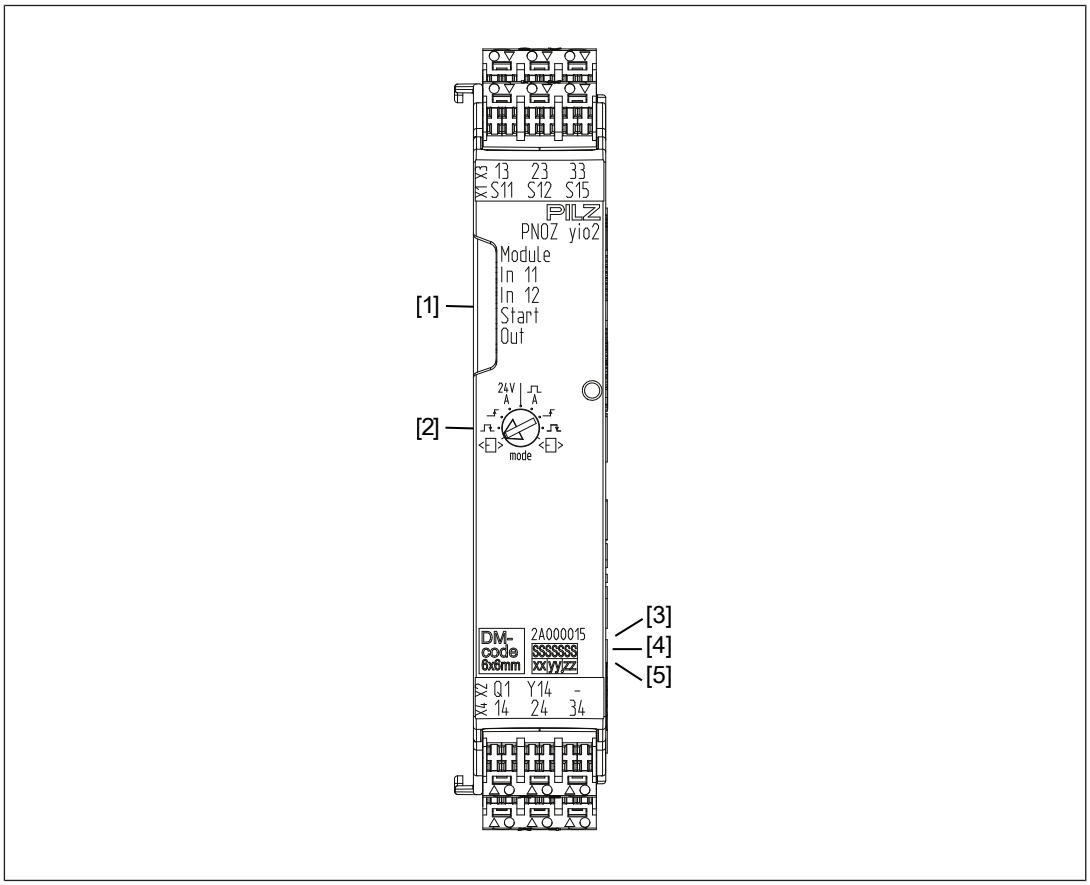

Legend

[1] LEDs for diagnostics

[2] Rotary switch for start types and test pulse evaluation (S11, S12)

[3] Order number

[4] Serial number

[5] Device version

15.10.3 Block diagram

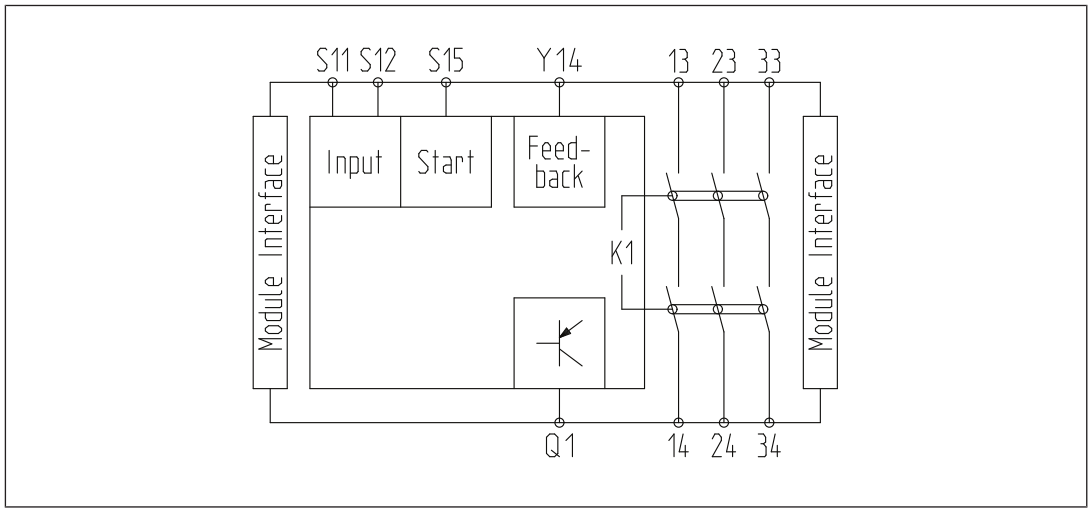

15.10.4 Dimensions

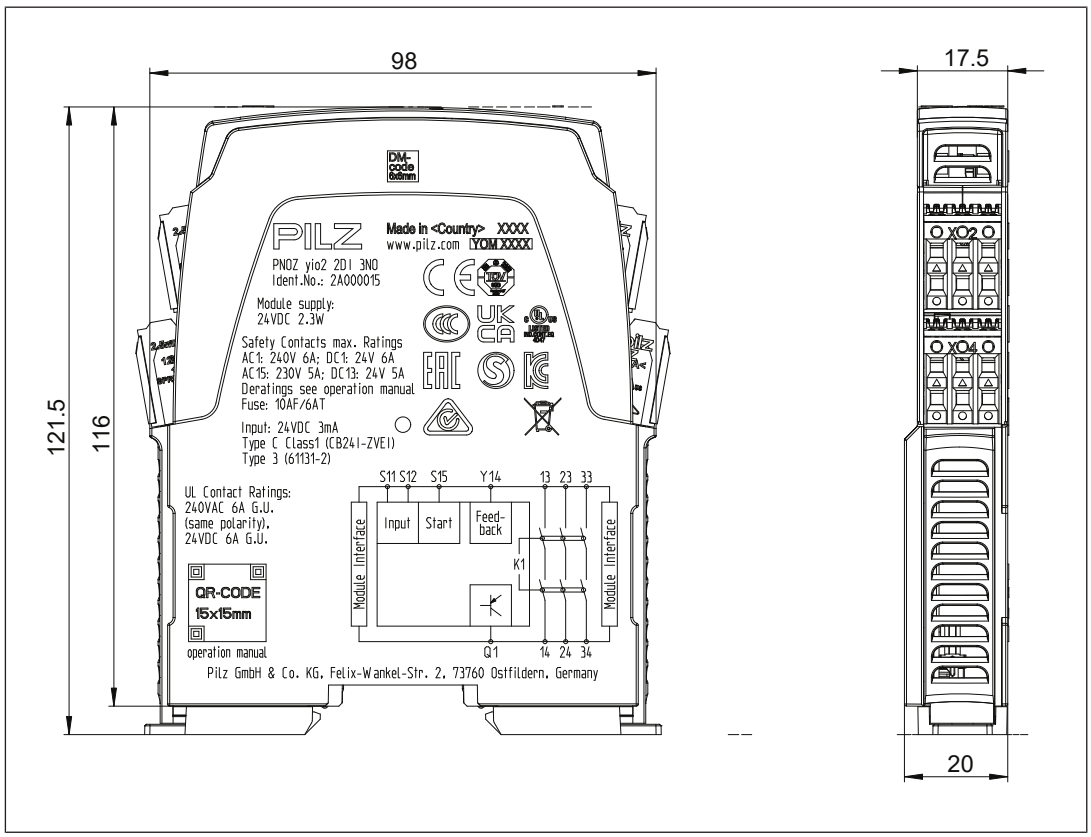

15.10.5 Technical details

General	
Certifications	**CE, EAC (Eurasian), TÜV, cULus Listed**
Electrical data	
Supply voltage	
for	**Module supply**
internal	**via head module**
Voltage	**24 V**
Kind	**DC**
Current consumption	**125 mA**
Duty cycle	**100 %**
Status indicator	**LED**
Permitted loads	**inductive, resistive**
Inputs	
Number	**2**
Number of start inputs	**1**
Number of feedback loop inputs	**1**
Input voltage in accordance with EN 61131-2 Type 1	**24 V DC**
Input current at rated voltage	**2,8 mA**
Input current range	**2 - 3 mA**
Pulse suppression	**1 ms**
Maximum input delay	**1,5 ms**
Potential isolation	**No**
Signal output	
Quantity	**1**
Voltage	**24 V**
Current	**50 mA**
Residual current at "0"	**10 µA**
Max. transient pulsed current	**70 mA**
Short circuit-proof	**yes**
Relay outputs	
Number of output contacts	
Safety contacts (N/O), instantaneous	**3**
Max. short circuit current IK	**1 kA**
Utilisation category	
In accordance with the standard	**EN 60947-4-1**
Utilisation category of safety contacts	
AC1 at	**240 V**
Min. current	**10 mA**
Max. current	**6 A**
Max. power	**1500 VA**
DC1 at	**24 V**
Min. current	**5 mA**
Max. current	**6 A**
Max. power	**150 W**

Relay outputs	
Utilisation category	
In accordance with the standard	**EN 60947-5-1**
Utilisation category of safety contacts	
AC15 at	**230 V**
Max. current	**5 A**
Max. power	**1.150 W**
DC13 (6 cycles/min) at	**24 V**
Max. current	**5 A**
Max. power	**120 W**
Utilisation category in accordance with UL	
Voltage	**240 V AC G.U. Resistive**
With current	**6 A**
Voltage	**24 V DC G. U. Resistive**
With current	**6 A**
Pilot Duty; R300	**24 V DC**
With current	**3 A**
Pilot Duty; B300	**230 V AC**
With current	**3 A**
External contact fuse protection, safety contacts	
In accordance with the standard	**EN 60947-5-1**
Max. melting integral	**132 A²s**
Blow-out fuse, quick	**10 A**
Blow-out fuse, slow	**6 A**
Blow-out fuse, gG	**10 A**
Contact material	**AgCuNi + 0,2 µm Au**
Potential isolation	**yes**
Conventional thermal current while loading several contacts	
Ith per contact at UB DC; AC1: 240 V, DC1: 24 V	
Conv. therm. current with 1 contact	**6 A**
Conv. therm. current with 2 contacts	**5,5 A**
Conv. therm. current with 3 contacts	**4,5 A**
Times	
Recovery time at max. switching frequency 1/s	
After E-STOP	**30 ms**
Waiting period with manual and monitored start	**30 ms**
Min. start pulse duration with a monitored start	
With rising edge	**100 ms**
with rising and falling edge	**150 ms**
Max. start pulse duration with a monitored start	
with rising and falling edge	**2 s**
Supply interruption before de-energisation	**20 ms**
Simultaneity, input circuit	∞

Environmental data	
Ambient temperature	
In accordance with the standard	**EN 60068-2-14**
Temperature range	**-10 - 55 °C**
Storage temperature	
In accordance with the standard	**EN 60068-2-1/-2**
Temperature range	**-40 - 85 °C**
Climatic suitability	
In accordance with the standard	**EN 60068-2-78**
Condensation during operation	**Not permitted**
EMC	**EN 60947-5-1, EN 61000-6-2, EN 61000-6-4, EN 61326-3-1**
Vibration	
In accordance with the standard	**EN 60068-2-6**
Frequency	**10 - 55 Hz**
Amplitude	**0,35 mm**
Shock stress	
In accordance with the standard	**EN 60068-2-27**
Acceleration	**15g**
Duration	**11 ms**
Airgap creepage	
In accordance with the standard	**EN 60947-5-1**
Overvoltage category	**III**
Pollution degree	**2**
Protection type	
In accordance with the standard	**EN 60529**
Housing	**IP20**
Terminals	**IP20**
Mounting area (e.g. control cabinet)	**IP54**
Potential isolation	
Potential isolation between	**Output and system voltage**
Type of potential isolation	**Protective separation**
Rated insulation voltage	**250 V**
Rated surge voltage	**6000 V**
Mechanical data	
Mounting position	**Any**
Mechanical life	**10,000,000 cycles**
DIN rail	
Top hat rail	**35 x 7,5 EN 50022**
Recess width	**27 mm**
Max. cable length	
Max. cable length per input	**1 km**
Material	
Bottom	**PC**
Top	**PC**
Connection type	**Spring-loaded terminal, screw terminal**

Mechanical data	
Mounting type	**plug-in**
Conductor cross section with screw terminals	
1 core flexible	**0,25 - 2,5 mm², 24 - 12 AWG**
2 core with the same cross section, flexible with crimp connectors, no plastic sleeve	**0,25 - 1 mm², 24 - 16 AWG**
2 core with the same cross section, flexible without crimp connectors or with TWIN crimp connectors	**0,25 - 1,5 mm², 24 - 16 AWG**
Torque setting with screw terminals	**0,5 Nm**
Stripping length with screw terminals	**8 mm**
Conductor cross section with spring-loaded terminals: Flexible with/without crimp connector	**0,2 - 2,5 mm², 24 - 12 AWG**
Spring-loaded terminals: Terminal points per connection	**2**
Stripping length with spring-loaded terminals	**9 mm**
Dimensions	
Height	**98 mm**
Width	**17,5 mm**
Depth	**121 mm**
Weight	**115 g**

Where standards are undated, the 2021-01 latest editions shall apply.

15.10.6 Safety characteristic data

NOTICE

You must comply with the safety characteristic data in order to achieve the required safety level for your plant/machine.

Unit	Operating mode	EN ISO 13849-1: 2015 PL	EN ISO 13849-1: 2015 Category	EN 62061 SIL CL	EN 62061 PFH_D [1/h]	IEC 61511 SIL	IEC 61511 PFD	EN ISO 13849-1: 2015 T_M [year]
Input								
Inputs	**2-channel**	**PL e**	**Cat. 4**	**SIL CL 3**	**1,93E-10**	**SIL 3**	**1,67E-05**	**20**
Output								
Relay outputs	**2-channel**	**PL e**	**Cat. 4**	**SIL CL 3**	**8,75E-10**	**SIL 3**	**7,21E-05**	**20**

Explanatory notes for the safety-related characteristic data:

- The SIL CL value in accordance with EN 62061 corresponds to the SIL value in accordance with EN 61508.
- T_M is the maximum mission time in accordance with EN ISO 13849-1. The value also applies as the retest interval in accordance with EN 61508-6 and IEC 61511 and as the proof test interval and mission time in accordance with EN 62061.
- These characteristic data also apply in applications with feedback loop

Additional information for applications in accordance with IEC 61511:

- Hardware fault tolerance: 1
- Subsystem of type B
- Safety function: safe shutdown

All the units used within a safety function must be considered when calculating the safety characteristic data.

INFORMATION

A safety function's SIL/PL values are **not** identical to the SIL/PL values of the units that are used and may be different. We recommend that you use the PAScal software tool to calculate the safety function's SIL/PL values.

15.10.7 Classification according to ZVEI, CB24I

The following tables describe the classes and specific values of the product interface and the classes of interfaces compatible with it. The classification is described in the ZVEI position paper "Classification of Binary 24 V Interfaces - Functional Safety aspects covered by dynamic testing".

Input	
Interfaces	
Drain	
Interface	Sensor
Class	C1
Source	
Interface	Module
Class	C1, C2, C3
Drain parameters	
Max. test pulse duration	1 ms
Min. input resistance	10 kOhm
Max. capacitive load	126 nF

Relay outputs	
Interfaces	
Source	
Interface	Module
Class	A
Drain	
Interface	Actuator
Class	A
Source parameters	
Min. switching voltage	12 V
Max. switching voltage	250 V
Min. switching current	5 mA
Max. switching current	6 A
Potential isolation	yes

15.10.8 Supplementary data

15.10.8.1 Permitted operating height

The values stated in the technical details apply to the use of the device in operating heights up to max. 2000 m above sea level. When used in greater heights, constraints have to be taken into account:

- Permitted maximum operating height 5000 m

Reduction of the voltage at the relay outputs at U_B = 30 V depending on the operating height

Prerequisite:

- Overvoltage category: III
- Pollution degree: 2

Maximum operating height	Max. voltage at the relay output
2000 m	300 V
3000 m	150 V
4000 m	150 V
5000 m	150 V

- From an operating height of 2000 m the max. permitted ambient temperature is reduced by 0.5 °C/100 m

Operating height	Permitted ambient temperature
3000 m	50 °C
4000 m	45 °C
5000 m	40 °C

15.10.8.2 Service life graph



CAUTION!

It is essential to consider the relay's service life graphs. The relay outputs' safety-related characteristic data is only valid if the values in the service life graphs are met.

The PFH value depends on the switch frequency and the load of the relay output.
If the service life graphs are not accessible, the stated PFH value can be used irrespective of the switch frequency and the load, as the PFH value already considers the relay's B10d value as well as the failure rates of the other components.

The service life graphs indicate the number of cycles from which failures due to wear must be expected. The wear is mainly caused by the electrical load; the mechanical load is negligible.

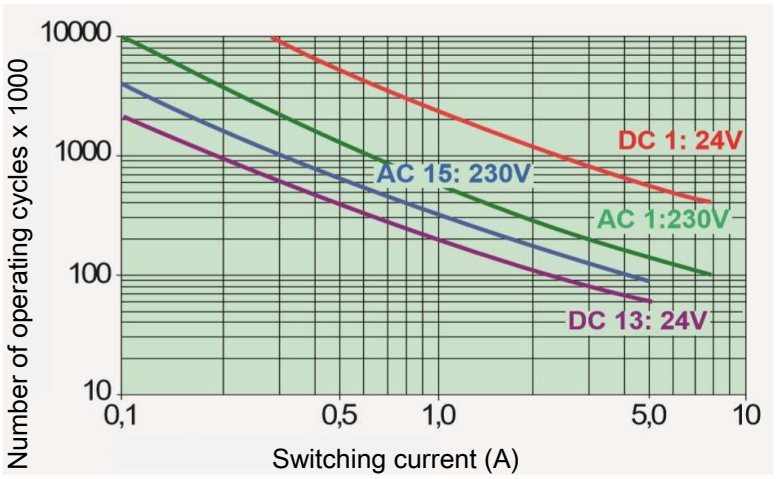

Example

- Inductive load: 0.3 A
- Utilisation category: AC15
- Contact service life: 1 000 000 cycles

Provided the application to be implemented requires fewer than 1 000 000 cycles, the PFH value (see Technical details [📖 133]) can be used in the calculation.

To increase the service life, sufficient spark suppression must be provided on all output contacts. With capacitive loads, any power surges that occur must be noted. With DC contactors, use flywheel diodes for spark suppression.

15.10.9 Order reference

15.10.9.1 Product

Product type	Features	Order no.
PNOZ yio2 2DI 3NO	Expansion module with 1 input function, 1 output function, instantaneous relay outputs	2A000015

15.10.9.2 Accessories

Connection terminals

Product type	Features	Order no.
PNOZ s Setscrew terminals	1 set of screw terminals, 17.5 mm	750003
PNOZ s Setspring loaded terminals	1 set of spring-loaded terminals, 17.5 mm	751003

15.11 PNOZ yio3 2DI 1SO 1SO t

15.11.1 Device features

- Expansion module for safe applications of the myPNOZ
- 1 input function to connect E-STOP pushbutton, safety gate switch or light curtain and start button
- Start type can be set via rotary switch
- 1 output function with 1 safe semiconductor output, instantaneous, and 1 input for feedback loop
- 1 output function with 1 safe semiconductor output, delayed, and 1 input for feedback loop
- Delay time can be set via rotary switches
- Off or on delay can be selected
- Supply voltage connection for the semiconductor outputs
- 1 signal output, e.g. for display
- LED display for:
  - Module status
  - State of the inputs
  - State of the start input
  - Switch state of the outputs



NOTICE

Required firmware version of the head module: ≥ 1.0

15.11.2 Front view

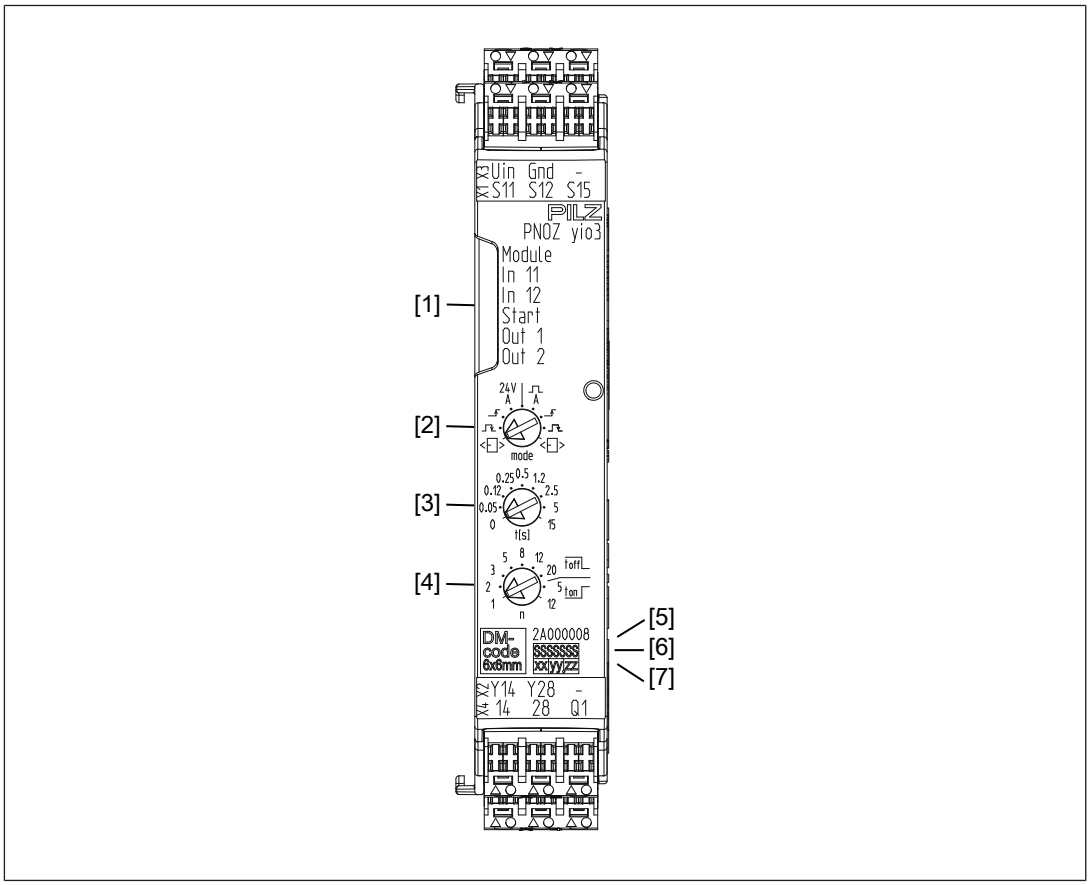

Legend

[1] LEDs for diagnostics

[2] Rotary switch for start types and test pulse evaluation (S11, S12)

[3] Rotary switch for time value for delay

[4] Rotary switch for factor for delay and delay type (on or off)

[5] Order number

[6] Serial number

[7] Device version

15.11.3 Block diagram

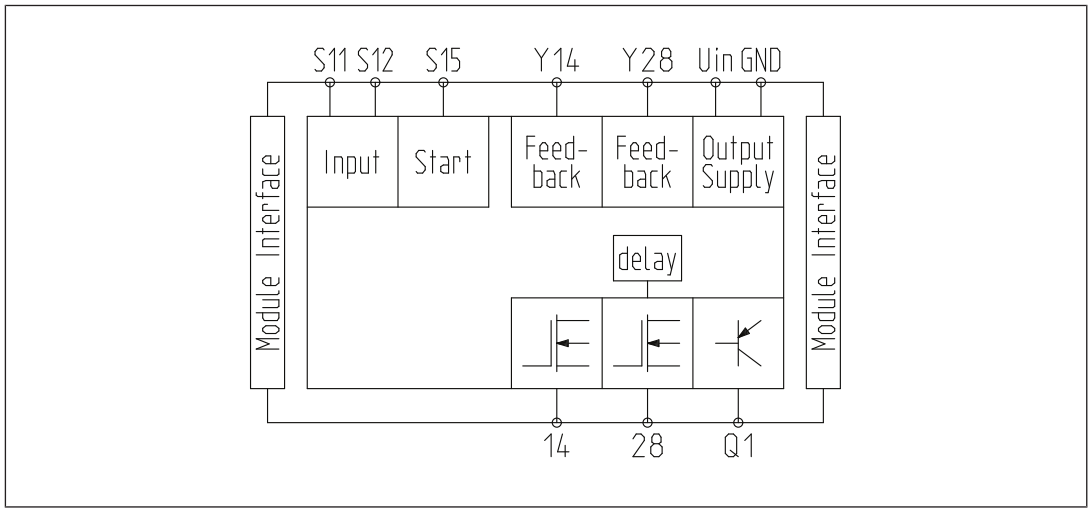

15.11.4 Dimensions

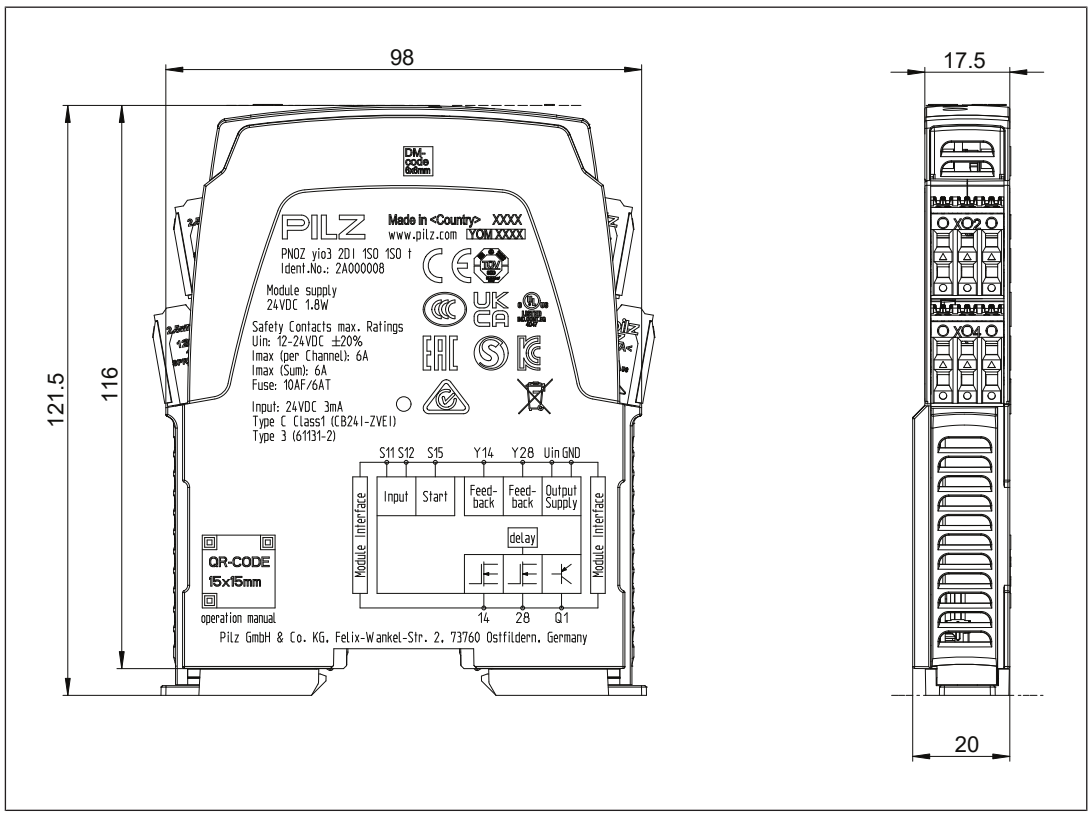

15.11.5 Technical details

General	
Certifications	**CE, EAC (Eurasian), TÜV, cULus Listed**
Electrical data	
Supply voltage	
for	**Supply to the SC outputs**
Voltage	**12 - 24 V**
Kind	**DC**
Voltage tolerance	**-20 %/+20 %**
Max. continuous current that the external power supply must provide	**6 A**
Potential isolation	**No**
Supply voltage	
for	**Module supply**
internal	**via head module**
Voltage	**24 V**
Kind	**DC**
Current consumption	**105 mA**
Duty cycle	**100 %**
Status indicator	**LED**
Permitted loads	**inductive, capacitive, resistive**
Inputs	
Number	**2**
Number of start inputs	**1**
Number of feedback loop inputs	**1**
Input voltage in accordance with EN 61131-2 Type 1	**24 V DC**
Input current at rated voltage	**2,8 mA**
Input current range	**2 - 3 mA**
Pulse suppression	**1 ms**
Maximum input delay	**1,5 ms**
Potential isolation	**No**
Semiconductor outputs	
Number of safety outputs	
Delayed	**1**
Instantaneous	**1**
Switching capability	
Voltage	**12 - 24 V**
Current	**6 A**
Residual current at "0" signal	**0,5 mA**
Max. transient pulsed current	**100 A**
Max. capacitive load	**2,5 µF**
Max. internal voltage drop	**160 mV**
Max. duration of off time during self test	**500 µs**
Potential isolation	**No**
Short circuit-proof	**yes**

Signal output	
Quantity	**1**
Voltage	**24 V**
Current	**50 mA**
Residual current at "0"	**10 µA**
Max. transient pulsed current	**70 mA**
Short circuit-proof	**yes**
Times	
Recovery time at max. switching frequency 1/s	
After E-STOP	**30 ms**
Selectable delay time when switching on	**0,25 s, 0,6 s, 1,25 s, 1,44 s, 12,5 s, 14,4 s, 180 s, 2,5 s, 25 s, 3 s, 30 s, 6 s, 60 s, 75 s**
Selectable delay time when switching off	**0,05 s, 0,1 s, 0,12 s, 0,15 s, 0,24 s, 0,25 s, 0,36 s, 0,4 s, 0,5 s, 0,6 s, 0,75 s, 0,96 s, 1 s, 1,2 s, 1,25 s, 1,44 s, 1,5 s, 10 s, 100 s, 12,5 s, 120 s, 14,4 s, 15 s, 180 s, 2 s, 2,4 s, 2,5 s, 20 s, 24 s, 25 s, 3 s, 3,6 s, 30 s, 300 s, 4 s, 40 s, 45 s, 5 s, 6 s, 60 s, 7,5 s, 75 s, 9,6 s**
Time accuracy	**+/-1,5 %**
Waiting period with manual and monitored start	**30 ms**
Min. start pulse duration with a monitored start	
With rising edge	**100 ms**
with rising and falling edge	**150 ms**
Max. start pulse duration with a monitored start	
with rising and falling edge	**2 s**
Supply interruption before de-energisation	**20 ms**
Simultaneity, input circuit	∞
Environmental data	
Ambient temperature	
In accordance with the standard	**EN 60068-2-14**
Temperature range	**-10 - 55 °C**
Storage temperature	
In accordance with the standard	**EN 60068-2-1/-2**
Temperature range	**-40 - 85 °C**
Climatic suitability	
In accordance with the standard	**EN 60068-2-78**
Condensation during operation	**Not permitted**
Max. operating height above sea level	**5000 m**
EMC	**EN 60947-5-1, EN 61000-6-2, EN 61000-6-4, EN 61326-3-1**
Vibration	
In accordance with the standard	**EN 60068-2-6**
Frequency	**10 - 55 Hz**
Amplitude	**0,35 mm**

Environmental data	
Shock stress	
In accordance with the standard	**EN 60068-2-27**
Acceleration	**15g**
Duration	**11 ms**
Airgap creepage	
In accordance with the standard	**EN 60947-5-1**
Overvoltage category	**III**
Pollution degree	**2**
Protection type	
In accordance with the standard	**EN 60529**
Housing	**IP20**
Terminals	**IP20**
Mounting area (e.g. control cabinet)	**IP54**
Mechanical data	
Mounting position	**Any**
DIN rail	
Top hat rail	**35 x 7,5 EN 50022**
Recess width	**27 mm**
Max. cable length	
Max. cable length per input	**1 km**
Material	
Bottom	**PC**
Top	**PC**
Connection type	**Spring-loaded terminal, screw terminal**
Mounting type	**plug-in**
Conductor cross section with screw terminals	
1 core flexible	**0,25 - 2,5 mm², 24 - 12 AWG**
2 core with the same cross section, flexible with crimp connectors, no plastic sleeve	**0,25 - 1 mm², 24 - 16 AWG**
2 core with the same cross section, flexible without crimp connectors or with TWIN crimp connectors	**0,25 - 1,5 mm², 24 - 16 AWG**
Torque setting with screw terminals	**0,5 Nm**
Stripping length with screw terminals	**8 mm**
Conductor cross section with spring-loaded terminals: Flexible with/without crimp connector	**0,2 - 2,5 mm², 24 - 12 AWG**
Spring-loaded terminals: Terminal points per connection	**2**
Stripping length with spring-loaded terminals	**9 mm**
Dimensions	
Height	**98 mm**
Width	**17,5 mm**
Depth	**121 mm**
Weight	**87 g**

Where standards are undated, the 2021-01 latest editions shall apply.

15.11.6 Safety characteristic data

NOTICE

You must comply with the safety characteristic data in order to achieve the required safety level for your plant/machine.

Unit	Operating mode	EN ISO 13849-1: 2015 PL	EN ISO 13849-1: 2015 Category	EN 62061 SIL CL	EN 62061 PFH_D [1/h]	IEC 61511 SIL	IEC 61511 PFD	EN ISO 13849-1: 2015 T_M [year]
Input								
Inputs	**2-channel**	**PL e**	**Cat. 4**	**SIL CL 3**	**1,93E-10**	**SIL 3**	**1,67E-05**	**20**
Output								
SC output, single	**2-channel**	**PL e**	**Cat. 4**	**SIL CL 3**	**6,44E-10**	**SIL 3**	**5,43E-05**	**20**
SC output, redundant	**2-channel**	**PL e**	**Cat. 4**	**SIL CL 3**	**9,68E-10**	**SIL 3**	**8,16E-05**	**20**

Explanatory notes for the safety-related characteristic data:

- The SIL CL value in accordance with EN 62061 corresponds to the SIL value in accordance with EN 61508.
- T_M is the maximum mission time in accordance with EN ISO 13849-1. The value also applies as the retest interval in accordance with EN 61508-6 and IEC 61511 and as the proof test interval and mission time in accordance with EN 62061.
- These characteristic data also apply in applications with feedback loop

Additional information for applications in accordance with IEC 61511:

- Hardware fault tolerance: 1
- Subsystem of type B
- Safety function: safe shutdown

All the units used within a safety function must be considered when calculating the safety characteristic data.

INFORMATION

A safety function's SIL/PL values are **not** identical to the SIL/PL values of the units that are used and may be different. We recommend that you use the PAScal software tool to calculate the safety function's SIL/PL values.

15.11.7 Classification according to ZVEI, CB24I

The following tables describe the classes and specific values of the product interface and the classes of interfaces compatible with it. The classification is described in the ZVEI position paper "Classification of Binary 24 V Interfaces - Functional Safety aspects covered by dynamic testing".

Input	
Interfaces	
Drain	
Interface	Sensor
Class	C1
Source	
Interface	Module
Class	C1, C2, C3
Drain parameters	
Test pulse duration, safety outputs	1 ms
Min. input resistance	10 kOhm
Max. capacitive load	126 nF

Single-pole output	
Interfaces	
Source	
Interface	Module
Class	C2
Drain	
Interface	Actuator
Class	C1, C2
Source parameters	
Max. test pulse duration	500 µs
Max. rated current	6 A
Max. capacitive load	2,5 µF

15.11.8 Order reference

15.11.8.1 Product

Product type	Features	Order no.
PNOZ yio3 2DI 1SO 1SO t	Expansion module with 1 input function, 2 output functions, instantaneous/delayed semiconductor output	2A000008

15.11.8.2 Accessories

Connection terminals

Product type	Features	Order no.
PNOZ s Setscrew terminals	1 set of screw terminals, 17.5 mm	750003
PNOZ s Setspring loaded terminals	1 set of spring-loaded terminals, 17.5 mm	751003

15.12 PNOZ yio4 2DI 3NO t

15.12.1 Device features

- Expansion module for safe applications of the myPNOZ
- 1 input function to connect E-STOP pushbutton, safety gate switch or light curtain and start button
- Start type can be set via rotary switch
- 1 output function with 3 safe relay outputs, positive-guided, delayed, and 1 input for feedback loop
- Delay time can be set via rotary switches
- Off or on delay can be selected
- 1 signal output, e.g. for display
- LED display for:
  - Module status
  - State of the inputs
  - State of the start input
  - Switch state of the outputs



NOTICE

Required firmware version of the head module: ≥ 1.0

15.12.2 Front view

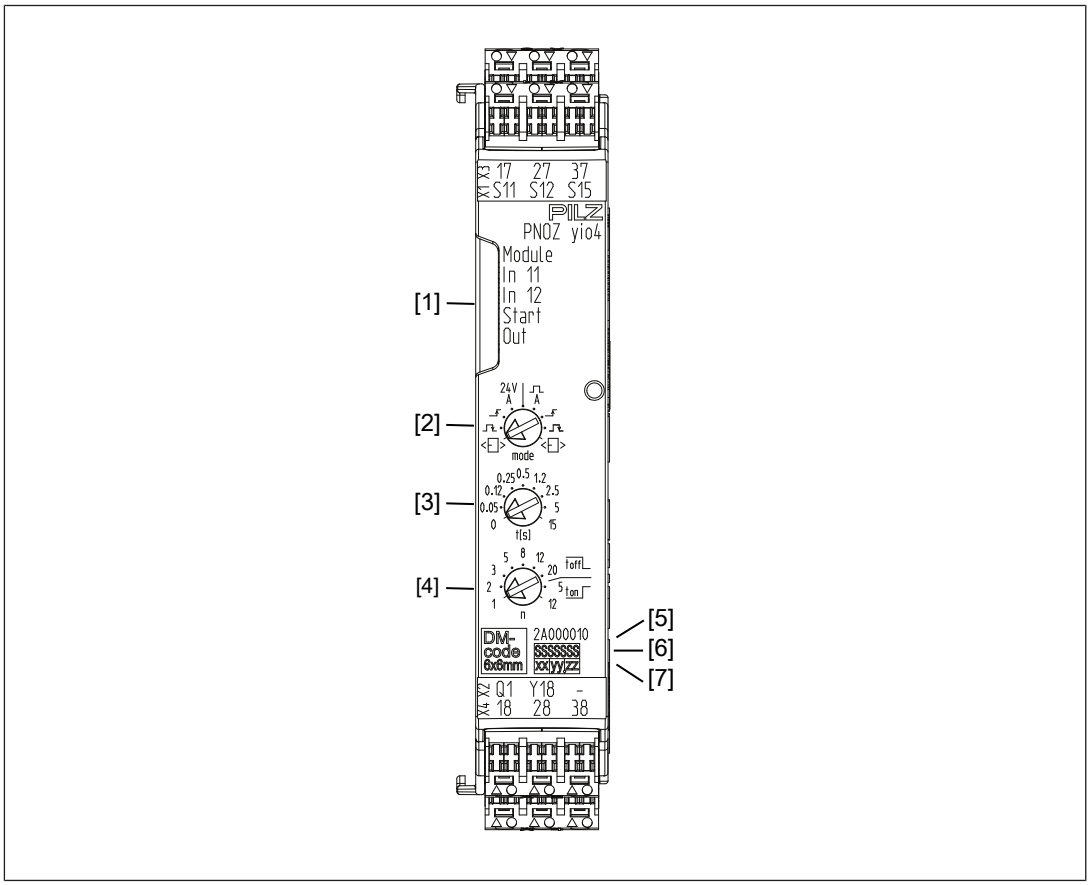

Legend

[1] LEDs for diagnostics

[2] Rotary switch for start types and test pulse evaluation (S11, S12)

[3] Rotary switch for time value for delay

[4] Rotary switch for factor for delay and delay type (on or off)

[5] Order number

[6] Serial number

[7] Device version

15.12.3 Block diagram

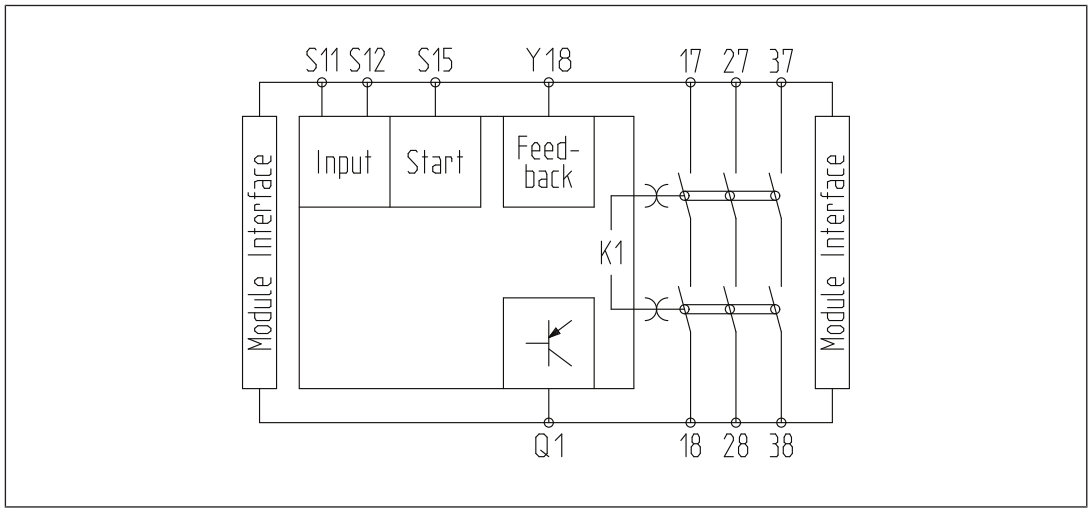

15.12.4 Dimensions

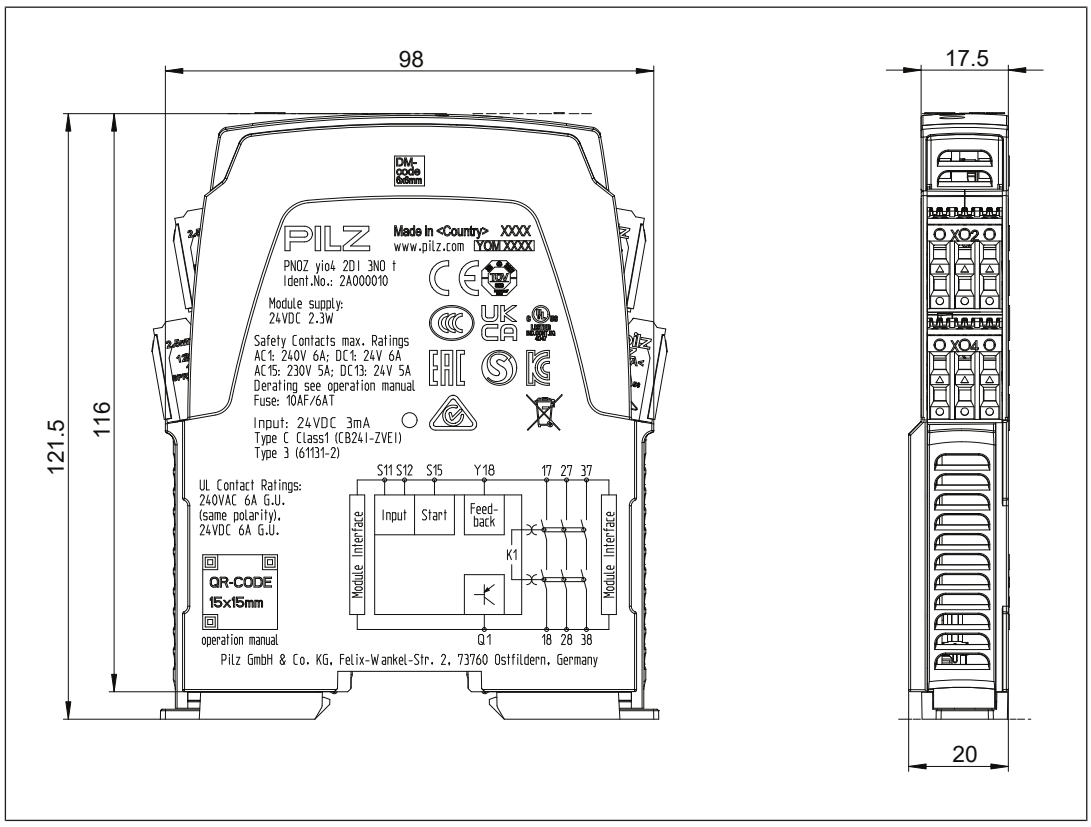

15.12.5 Technical details

General	
Certifications	**CE, EAC (Eurasian), TÜV, cULus Listed**
Electrical data	
Supply voltage	
for	**Module supply**
internal	**via head module**
Voltage	**24 V**
Kind	**DC**
Current consumption	**125 mA**
Duty cycle	**100 %**
Status indicator	**LED**
Permitted loads	**inductive, resistive**
Inputs	
Number	**2**
Number of start inputs	**1**
Number of feedback loop inputs	**1**
Input voltage in accordance with EN 61131-2 Type 1	**24 V DC**
Input current at rated voltage	**2,8 mA**
Input current range	**2 - 3 mA**
Pulse suppression	**1 ms**
Maximum input delay	**1,5 ms**
Potential isolation	**No**
Signal output	
Quantity	**1**
Voltage	**24 V**
Current	**50 mA**
Residual current at "0"	**10 µA**
Max. transient pulsed current	**70 mA**
Short circuit-proof	**yes**
Relay outputs	
Number of output contacts	
Safety contacts (N/O), delayed	**3**
Max. short circuit current IK	**1 kA**
Utilisation category	
In accordance with the standard	**EN 60947-4-1**
Utilisation category of safety contacts	
AC1 at	**240 V**
Min. current	**10 mA**
Max. current	**6 A**
Max. power	**1500 VA**
DC1 at	**24 V**
Min. current	**5 mA**
Max. current	**6 A**
Max. power	**150 W**

Relay outputs	
Utilisation category	
In accordance with the standard	**EN 60947-5-1**
Utilisation category of safety contacts	
AC15 at	**230 V**
Max. current	**5 A**
Max. power	**1.150 W**
DC13 (6 cycles/min) at	**24 V**
Max. current	**5 A**
Max. power	**120 W**
Utilisation category in accordance with UL	
Voltage	**240 V AC G.U. Resistive**
With current	**6 A**
Voltage	**24 V DC G. U. Resistive**
With current	**6 A**
Pilot Duty; R300	**24 V DC**
With current	**3 A**
Pilot Duty; B300	**230 V AC**
With current	**3 A**
External contact fuse protection, safety contacts	
In accordance with the standard	**EN 60947-5-1**
Max. melting integral	**132 A²s**
Blow-out fuse, quick	**10 A**
Blow-out fuse, slow	**6 A**
Blow-out fuse, gG	**10 A**
Contact material	**AgCuNi + 0,2 µm Au**
Potential isolation	**yes**
Conventional thermal current while loading several contacts	
Ith per contact at UB DC; AC1: 240 V, DC1: 24 V	
Conv. therm. current with 1 contact	**6 A**
Conv. therm. current with 2 contacts	**5,5 A**
Conv. therm. current with 3 contacts	**4,5 A**
Times	
Recovery time at max. switching frequency 1/s	
After E-STOP	**30 ms**
Selectable delay time when switching on	**0,25 s, 0,6 s, 1,25 s, 1,44 s, 12,5 s, 14,4 s, 180 s, 2,5 s, 25 s, 3 s, 30 s, 6 s, 60 s, 75 s**
Selectable delay time when switching off	**0,05 s, 0,1 s, 0,12 s, 0,15 s, 0,24 s, 0,25 s, 0,36 s, 0,4 s, 0,5 s, 0,6 s, 0,75 s, 0,96 s, 1 s, 1,2 s, 1,25 s, 1,44 s, 1,5 s, 10 s, 100 s, 12,5 s, 120 s, 14,4 s, 15 s, 180 s, 2 s, 2,4 s, 2,5 s, 20 s, 24 s, 25 s, 3 s, 3,6 s, 30 s, 300 s, 4 s, 40 s, 45 s, 5 s, 6 s, 60 s, 7,5 s, 75 s, 9,6 s**
Time accuracy	**+/-1,5 %**
Waiting period with manual and monitored start	**30 ms**

Times	
Min. start pulse duration with a monitored start	
With rising edge	**100 ms**
with rising and falling edge	**150 ms**
Max. start pulse duration with a monitored start	
with rising and falling edge	**2 s**
Supply interruption before de-energisation	**20 ms**
Simultaneity, input circuit	∞
Environmental data	
Ambient temperature	
In accordance with the standard	**EN 60068-2-14**
Temperature range	**-10 - 55 °C**
Storage temperature	
In accordance with the standard	**EN 60068-2-1/-2**
Temperature range	**-40 - 85 °C**
Climatic suitability	
In accordance with the standard	**EN 60068-2-78**
Condensation during operation	**Not permitted**
EMC	**EN 60947-5-1, EN 61000-6-2, EN 61000-6-4, EN 61326-3-1**
Vibration	
In accordance with the standard	**EN 60068-2-6**
Frequency	**10 - 55 Hz**
Amplitude	**0,35 mm**
Shock stress	
In accordance with the standard	**EN 60068-2-27**
Acceleration	**15g**
Duration	**11 ms**
Airgap creepage	
In accordance with the standard	**EN 60947-5-1**
Overvoltage category	**III**
Pollution degree	**2**
Protection type	
In accordance with the standard	**EN 60529**
Housing	**IP20**
Terminals	**IP20**
Mounting area (e.g. control cabinet)	**IP54**
Potential isolation	
Potential isolation between	**Output and system voltage**
Type of potential isolation	**Protective separation**
Rated insulation voltage	**250 V**
Rated surge voltage	**6000 V**
Mechanical data	
Mounting position	**Any**
Mechanical life	**10,000,000 cycles**

Mechanical data	
DIN rail	
Top hat rail	**35 x 7,5 EN 50022**
Recess width	**27 mm**
Max. cable length	
Max. cable length per input	**1 km**
Material	
Bottom	**PC**
Top	**PC**
Connection type	**Spring-loaded terminal, screw terminal**
Mounting type	**plug-in**
Conductor cross section with screw terminals	
1 core flexible	**0,25 - 2,5 mm², 24 - 12 AWG**
2 core with the same cross section, flexible with crimp connectors, no plastic sleeve	**0,25 - 1 mm², 24 - 16 AWG**
2 core with the same cross section, flexible without crimp connectors or with TWIN crimp connectors	**0,25 - 1,5 mm², 24 - 16 AWG**
Torque setting with screw terminals	**0,5 Nm**
Stripping length with screw terminals	**8 mm**
Conductor cross section with spring-loaded terminals: Flexible with/without crimp connector	**0,2 - 2,5 mm², 24 - 12 AWG**
Spring-loaded terminals: Terminal points per connection	**2**
Stripping length with spring-loaded terminals	**9 mm**
Dimensions	
Height	**98 mm**
Width	**17,5 mm**
Depth	**121 mm**
Weight	**115 g**

Where standards are undated, the 2021-01 latest editions shall apply.

15.12.6 Safety characteristic data

NOTICE

You must comply with the safety characteristic data in order to achieve the required safety level for your plant/machine.

Unit	Operating mode	EN ISO 13849-1: 2015 PL	EN ISO 13849-1: 2015 Category	EN 62061 SIL CL	EN 62061 PFH_D [1/h]	IEC 61511 SIL	IEC 61511 PFD	EN ISO 13849-1: 2015 T_M [year]
Input								
Inputs	**2-channel**	**PL e**	**Cat. 4**	**SIL CL 3**	**1,93E-10**	**SIL 3**	**1,67E-05**	**20**
Output								
Relay outputs	**2-channel**	**PL e**	**Cat. 4**	**SIL CL 3**	**8,75E-10**	**SIL 3**	**7,21E-05**	**20**

Explanatory notes for the safety-related characteristic data:

- The SIL CL value in accordance with EN 62061 corresponds to the SIL value in accordance with EN 61508.
- T_M is the maximum mission time in accordance with EN ISO 13849-1. The value also applies as the retest interval in accordance with EN 61508-6 and IEC 61511 and as the proof test interval and mission time in accordance with EN 62061.
- These characteristic data also apply in applications with feedback loop

Additional information for applications in accordance with IEC 61511:

- Hardware fault tolerance: 1
- Subsystem of type B
- Safety function: safe shutdown

All the units used within a safety function must be considered when calculating the safety characteristic data.

INFORMATION

A safety function's SIL/PL values are **not** identical to the SIL/PL values of the units that are used and may be different. We recommend that you use the PAScal software tool to calculate the safety function's SIL/PL values.

15.12.7 Classification according to ZVEI, CB24I

The following tables describe the classes and specific values of the product interface and the classes of interfaces compatible with it. The classification is described in the ZVEI position paper "Classification of Binary 24 V Interfaces - Functional Safety aspects covered by dynamic testing".

Input	
Interfaces	
Drain	
Interface	Sensor
Class	C1
Source	
Interface	Module
Class	C1, C2, C3
Drain parameters	
Max. test pulse duration	1 ms
Min. input resistance	10 kOhm
Max. capacitive load	126 nF

Relay outputs	
Interfaces	
Source	
Interface	Module
Class	A
Drain	
Interface	Actuator
Class	A
Source parameters	
Min. switching voltage	12 V
Max. switching voltage	250 V
Min. switching current	5 mA
Max. switching current	6 A
Potential isolation	yes

15.12.8 Supplementary data

15.12.8.1 Permitted operating height

The values stated in the technical details apply to the use of the device in operating heights up to max. 2000 m above sea level. When used in greater heights, constraints have to be taken into account:

- Permitted maximum operating height 5000 m

Reduction of the voltage at the relay outputs at U_B = 30 V depending on the operating height

Prerequisite:

- Overvoltage category: III
- Pollution degree: 2

Maximum operating height	Max. voltage at the relay output
2000 m	300 V
3000 m	150 V
4000 m	150 V
5000 m	150 V

- From an operating height of 2000 m the max. permitted ambient temperature is reduced by 0.5 °C/100 m

Operating height	Permitted ambient temperature
3000 m	50 °C
4000 m	45 °C
5000 m	40 °C

15.12.8.2 Service life graph



CAUTION!

It is essential to consider the relay's service life graphs. The relay outputs' safety-related characteristic data is only valid if the values in the service life graphs are met.

The PFH value depends on the switch frequency and the load of the relay output.
If the service life graphs are not accessible, the stated PFH value can be used irrespective of the switch frequency and the load, as the PFH value already considers the relay's B10d value as well as the failure rates of the other components.

The service life graphs indicate the number of cycles from which failures due to wear must be expected. The wear is mainly caused by the electrical load; the mechanical load is negligible.

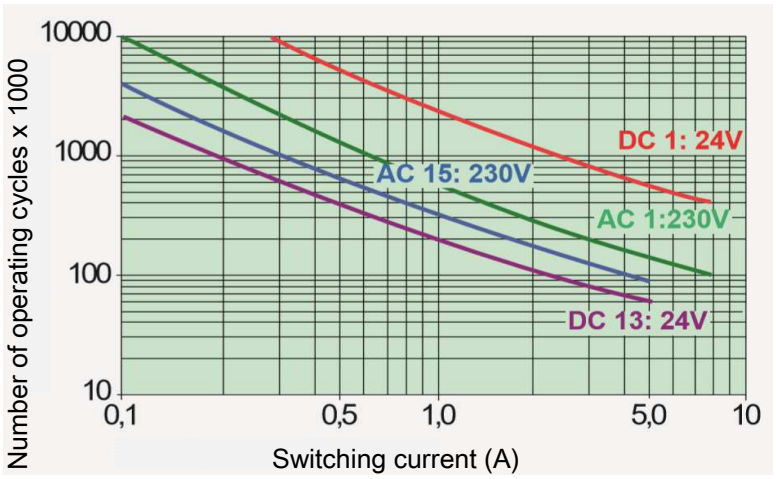

Example

- Inductive load: 0.3 A
- Utilisation category: AC15
- Contact service life: 1 000 000 cycles

Provided the application to be implemented requires fewer than 1 000 000 cycles, the PFH value (see Technical details [📖 153]) can be used in the calculation.

To increase the service life, sufficient spark suppression must be provided on all output contacts. With capacitive loads, any power surges that occur must be noted. With DC contactors, use flywheel diodes for spark suppression.

15.12.9 Order reference

15.12.9.1 Product

Product type	Features	Order no.
PNOZ yio4 2DI 3NO t	Expansion module with 1 input function, 1 output function, delayed relay outputs	2A000010

15.12.9.2 Accessories

Connection terminals

Product type	Features	Order no.
PNOZ s Setscrew terminals	1 set of screw terminals, 17.5 mm	750003
PNOZ s Setspring loaded terminals	1 set of spring-loaded terminals, 17.5 mm	751003

16 EC declaration of conformity

This product/these products meet the requirements of the directive 2006/42/EC for machinery of the European Parliament and of the Council. The complete EC Declaration of Conformity is available on the Internet at www.pilz.com/downloads.
Authorised representative: Norbert Fröhlich, Pilz GmbH & Co. KG, Felix-Wankel-Str. 2, 73760 Ostfildern, Germany

Support

Technical support is available from Pilz round the clock.

Americas
Brazil
+55 11 97569-2804
Canada
+1 888 315 7459
Mexico
+52 55 5572 1300
USA (toll-free)
+1 877-PILZUSA (745-9872)

Asia
China
+86 21 60880878-216
Japan
+81 45 471-2281
South Korea
+82 31 778 3300

Australia and Oceania
Australia
+61 3 95600621
New Zealand
+64 9 6345350

Europe
Austria
+43 1 7986263-0
Belgium, Luxembourg
+32 9 3217570
France
+33 3 88104003
Germany
+49 711 3409-444
Ireland
+353 21 4804983
Italy, Malta
+39 0362 1826711
Scandinavia
+45 74436332
Spain
+34 938497433
Switzerland
+41 62 88979-32
The Netherlands
+31 347 320477
Turkey
+90 216 5775552
United Kingdom
+44 1536 462203

You can reach our international hotline on:
+49 711 3409-222
support@pilz.com

Pilz develops environmentally-friendly products using ecological materials and energy-saving technologies. Offices and production facilities are ecologically designed, environmentally-aware and energy-saving. So Pilz offers sustainability, plus the security of using energy-efficient products and environmentally-friendly solutions.

BLUEECOMPETENCE Alliance Member
Partner of the Engineering Industry Sustainability Initiative

BRANDS OF THE CENTURY PILZ 2019 GERMAN STANDARDS

Quality Management ISO 9001:2015 REG. NO. 2462
Environmental Management ISO 14001 REG. NO. 2462
Energy Management ISO 50001 REG. NO. 2462

1005377-EN-02, 2021-03 Printed in Germany
© Pilz GmbH & Co. KG, 2019

CECE®, CHRE®, CMSE®, InduraNET p®, Leansafe®, Master of Safety®, Master of Security®, PAS4000®, PAScal®, PASconfig®, Pilz®, PIT®, PLID®, PMCprimo®, PMCprotego®, PMCtendo®, PMD®, PMI®, PNOZ®, PRBT®, PRCM®, Primo®, PRTM®, PSEN®, PSS®, PVIS®, SafetyBUS p®, SafetyEYE®, SafetyNET p®, THE SPIRIT OF SAFETY® are registered and protected trademark of Pilz GmbH & Co. KG in some countries. We would point out that product features may vary from the details stated in this document, depending on the status at the time of publication and the scope of the equipment. We accept no responsibility for the validity, accuracy and entirety of the text and graphics presented in this information. Please contact our Technical Sup if you have any questions.

We are represented internationally. Please refer to our homepage www.pilz.com for further details or contact our headquarters.

Headquarters: Pilz GmbH & Co. KG, Felix-Wankel-Straße 2, 73760 Ostfildern, Germany
Telephone: +49 711 3409-0, Telefax: +49 711 3409-133, E-Mail: info@pilz.com, Internet: www.pilz.com

PILZ
THE SPIRIT OF SAFETY