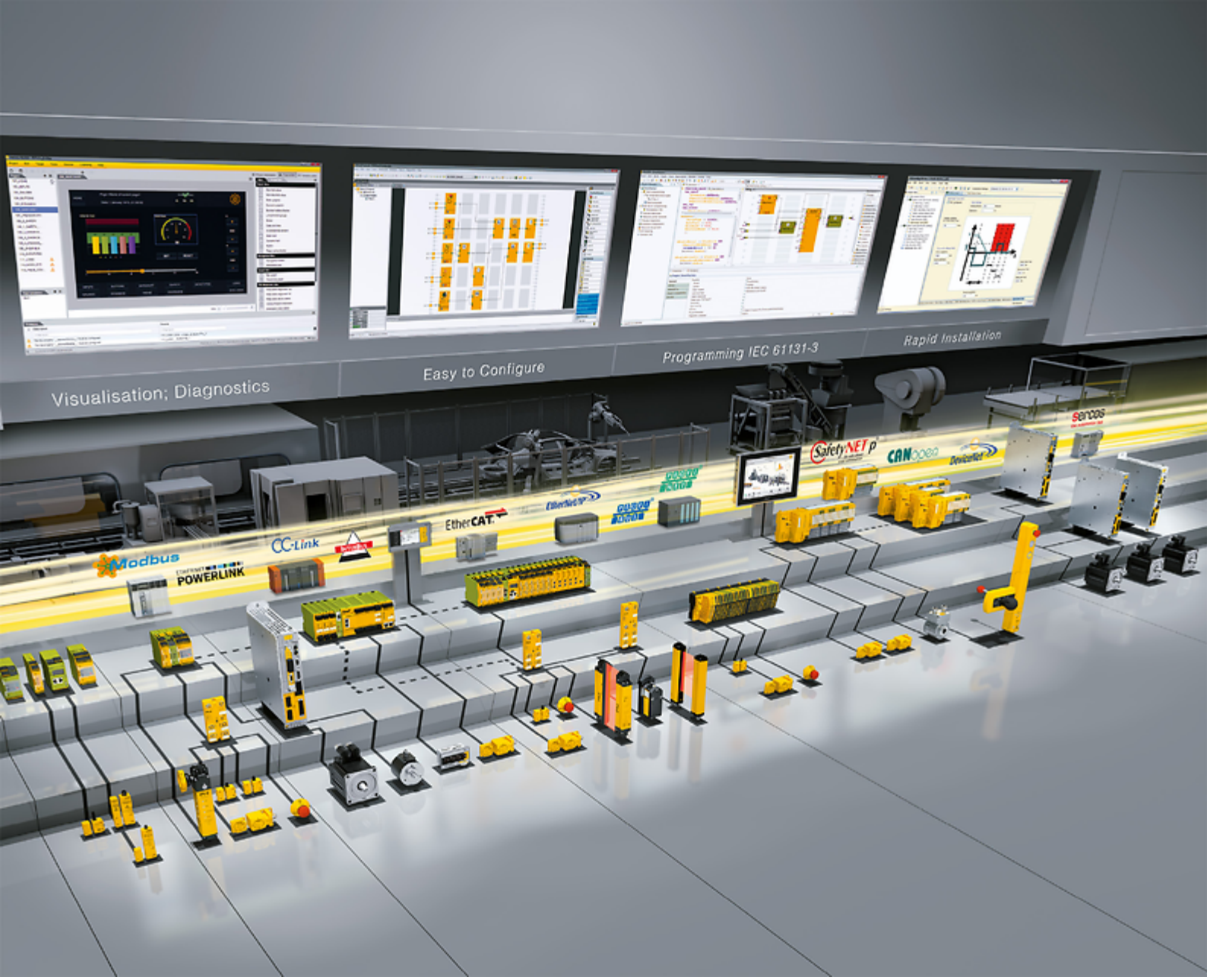

Modular safety relay myPNOZ

PILZ
THE SPIRIT OF SAFETY

Safety relays

Getting started-1005615-EN-02

This document is the original document.

All rights to this documentation are reserved by Pilz GmbH & Co. KG. Copies may be made for the user's internal purposes. Suggestions and comments for improving this documentation will be gratefully received.

Source code from third-party manufacturers or open source software has been used for some components. The relevant licence information is available on the Internet on the Pilz homepage.

Pilz®, PIT®, PMI®, PNOZ®, Primo®, PSEN®, PSS®, PVIS®, SafetyBUS p®, SafetyEYE®, SafetyNET p®, the spirit of safety® are registered and protected trademarks of Pilz GmbH & Co. KG in some countries.


SD means Secure Digital

1 The modular safety relay myPNOZ 4

2 Introduction to Getting Started manual 5

3 Task 6

4 Safety functions 7

5 Configure myPNOZ with myPNOZ Creator 9
5.1 Create logic configuration 9
5.2 Hardware configuration 11
5.3 Display, save and order myPNOZ configuration 13

6 Calculating the safety-related characteristic data 14

7 Wire myPNOZ 17

8 Install myPNOZ 18

9 Commission myPNOZ 19

10 Change configuration 20

11 Diagnostics 21
11.1 Status messages 21
11.2 Error messages 24
11.3 Errors on the safe outputs 30

1 The modular safety relay myPNOZ

myPNOZ is a modular safety relay, which can be used to implement various safety functions without the need for programming. A safety function can be achieved through the combination and wiring of the respective myPNOZ components. The “plug and play” principle was in the foreground during development, without compromising on safety requirements. With myPNOZ it is easy to implement safety functions up to PL e of EN ISO 13849 and SIL CL 3 of EN 62061 and SIL 3 of IEC 61508.

You create your individual myPNOZ using the web application **myPNOZ Creator**. It’s a simple process requiring no knowledge of programming. All you need to do is define the required safety functions and how they are linked.

Pilz then assembles your myPNOZ from the various modules, before setting it up and testing it.

Your myPNOZ arrives “ready-to-install”. All you need to do is install it in the control cabinet and wire it up. After testing the safety functions, myPNOZ is operational.

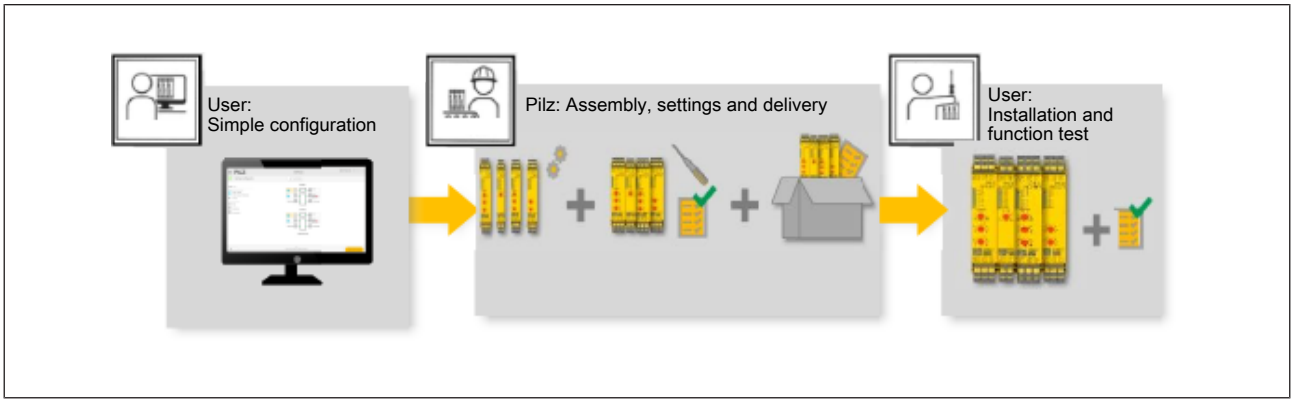

2 Introduction to Getting Started manual

This Getting Started manual uses an example to describe how to create and commission a myPNOZ. The Getting Started manual shows you the elementary steps and familiarises you with the myPNOZ.
A detailed description of the myPNOZ and the individual modules can be found in the **myPNOZ System Description**.



WARNING!

Loss of safety function due to incorrect use of the myPNOZ

This Getting Started manual does not contain the safety guidelines needed for safe installation and operation.
You must read the myPNOZ System Description.

3 Task

- A processing machine has two protection zones. One processing unit and a packaging unit with inspection area.
- In an emergency it should be possible to stop the whole machine. It should be possible to trigger the emergency stop from both units.
- Staff must be able to reach into the processing unit to change the tool or for cleaning work.
  It must be guaranteed that the processing unit is in a stop state whenever a staff member reaches into the danger zone.
- Maintenance staff must be able to reach into the inspection area for maintenance work.
  It must be guaranteed that the conveyor is stopped whenever a staff member reaches into the danger zone.
- Only the unit on which work needs to be carried out should be stopped. The other unit should continue running.
- After a stop, the units should only restart following confirmation on the operator panel.
- It must be guaranteed that nobody reaches into the product outlet area while the production unit is running. However, products must be able to exit.

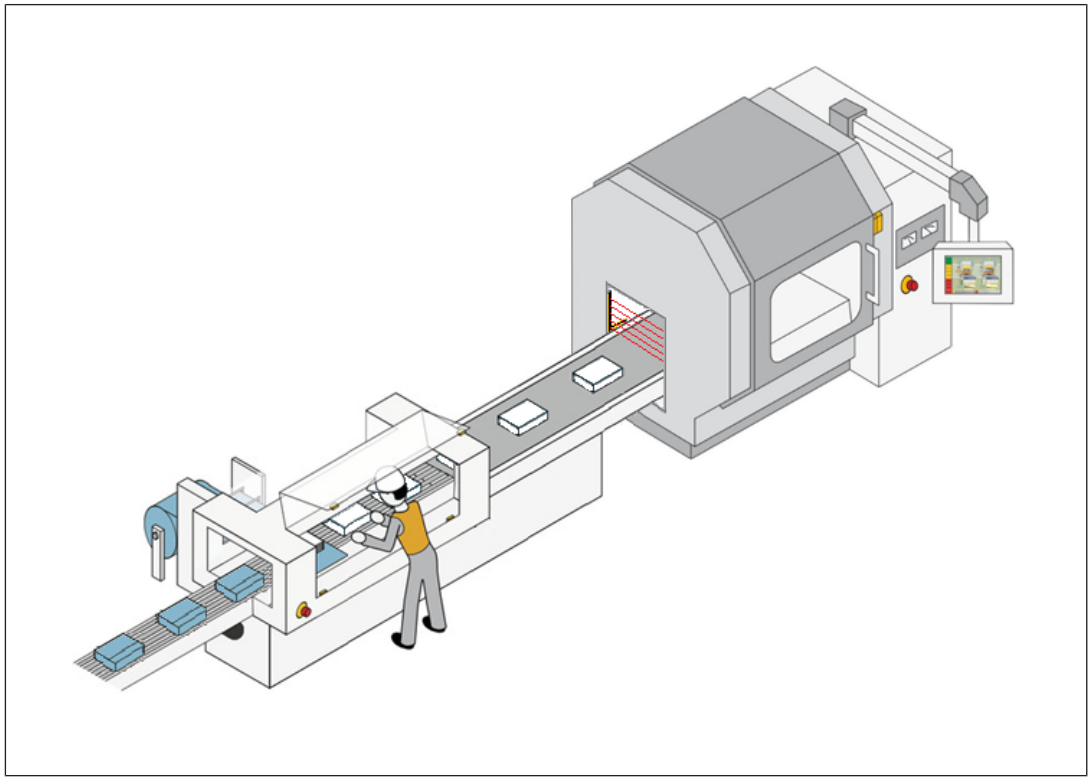

4 Safety functions

Global E-STOP function

In an emergency, the whole machine (processing unit and conveyor) can be stopped from both areas via the E-STOP pushbuttons (ES1 and ES2).

Monitored start with rising and falling edge
If the E-STOP function has been triggered, confirmation must be given on the operator panel in order for the machine to restart.

Zone 1: Processing unit

The processing unit is secured using a safety gate and light curtain.

- Safety gate safety function (SG1)
  If the safety gate is opened, then the processing unit is stopped.
  The safety function is started with a monitored start with rising and falling edge. If the safety function has been triggered, confirmation must be given on the operator panel in order for the processing unit to restart.
- Light curtain safety function (LC)
  If the light curtain is interrupted, then the processing unit is stopped.
  The safety function of the light curtain is temporarily suspended through integrated L-muting, so that the products can exit the processing area without the processing unit being stopped.
  The safety function is started with a monitored start with rising and falling edge. If the safety function has been triggered, confirmation must be given on the operator panel in order for the processing unit to restart.

Zone 2: Packaging unit with inspection area

The inspection area is equipped with a hatch for maintenance work. The hatch is secured using a safety switch.

- Safety gate safety function (SG2)
  The conveyor is stopped via a safety switch as soon as the hatch is opened.
  The safety function is started with a monitored start with rising and falling edge. If the safety function has been triggered, confirmation must be given on the operator panel in order for the conveyor to restart.

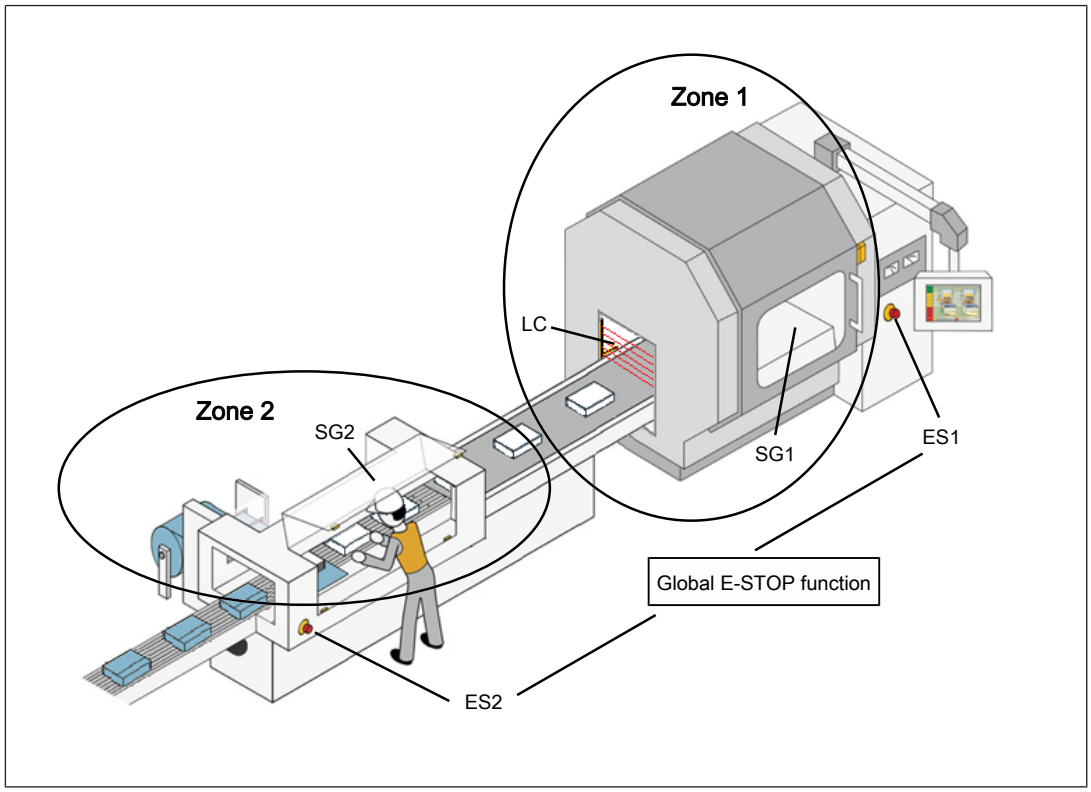
Zone 1
LC
Zone 2
SG2
SG1
ES1
Global E-STOP function
ES2

5 Configure myPNOZ with myPNOZ Creator

The safety functions and their logic connections are now mapped out in the myPNOZ Creator.
The web application myPNOZ Creator enables configuration to be carried out based on a logic plan or through the combination of modules. Based on this system configuration, the web application automatically assembles an individual myPNOZ.
It selects the required modules, defines the sequence and defines the position of the rotary switches. The result is a pre-configured myPNOZ, which can be ordered directly.

5.1 Create logic configuration

Open the web application myPNOZ Creator (http://mypnoz.com/creator) and map out the safety functions and their logic connections.

- **Global E-STOP function**
  Each myPNOZ contains the global safety function. It affects the outputs in each zone and is AND-linked to the inputs on the input modules. The global safety function is pre-configured as an input in each zone; changes to the properties affect all zones.
  So the global E-STOP function ES is only configured once for ES1 and ES2.
- **Zone 1:**
  - Global E-STOP function
    Monitored start with rising and falling edge
    with test pulse evaluation for detection of shorts across contacts
  - Safety gate input function (SG1),
    Monitored start with rising and falling edge
    with test pulse evaluation for detection of shorts across contacts
  - Light curtain input function (LC),
    Monitored start with rising and falling edge
  - Relay output, instantaneous

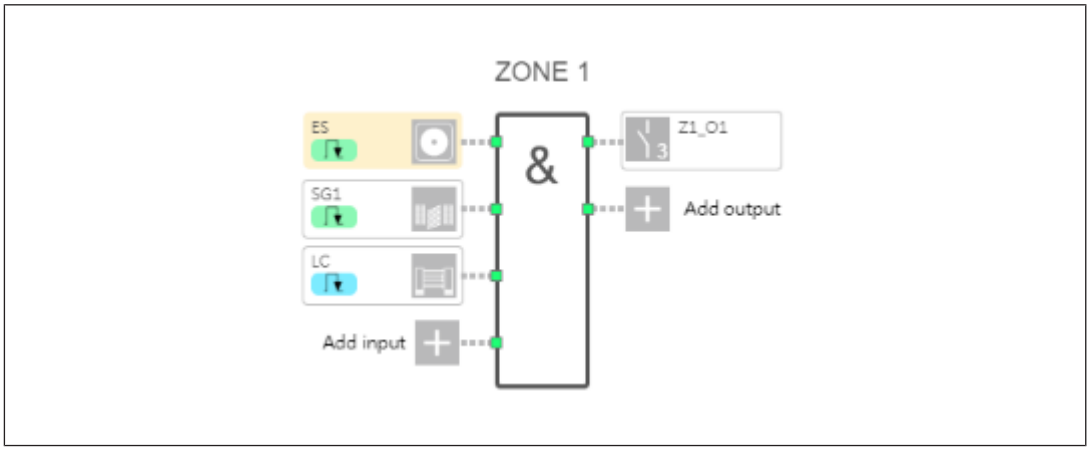

Zone 2:

– Global E-STOP function
Monitored start with rising and falling edge
with test pulse evaluation for detection of shorts across contacts

– Safety gate input function (SG2),
Monitored start with rising and falling edge
with test pulse evaluation for detection of shorts across contacts

– 2 semiconductor outputs, instantaneous

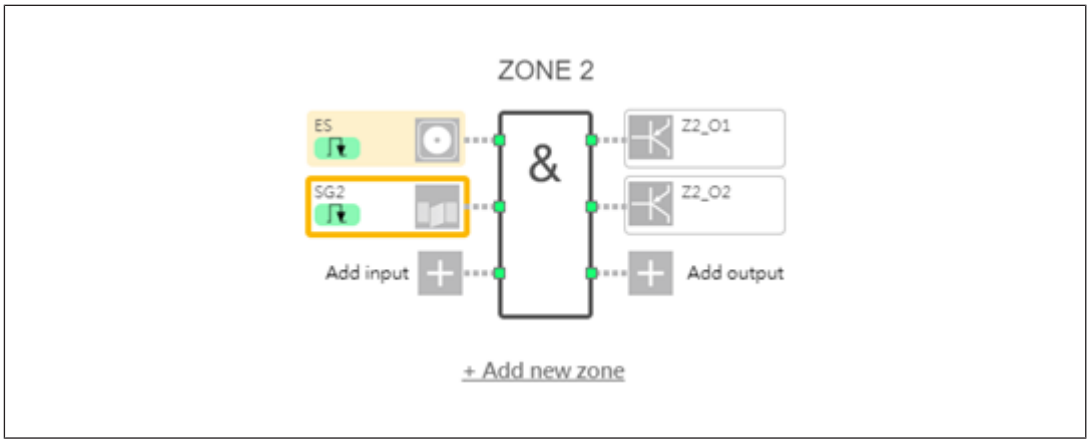

Simulate configuration

A simulation can then be started for test purposes, during which the potential interactions can be simulated.
Click on an input in simulation view and the switching outputs will be highlighted.

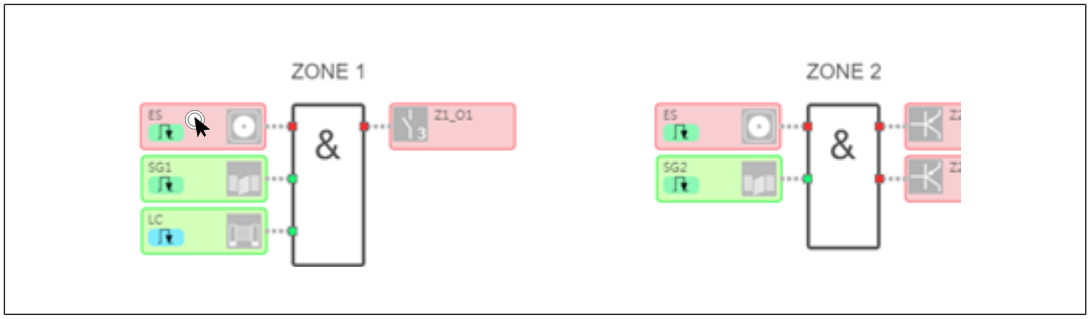

5.2 Hardware configuration

When you have created the logic configuration, the logic structure is optimised and automatically converted into the appropriate hardware system.
The hardware configuration is mapped out in the myPNOZ Creator. It contains all the necessary modules and the corresponding settings.
If you already know which hardware modules you need prior to configuration, you can assemble and configure your myPNOZ here directly from the various modules.

The following hardware configuration was generated for this example:

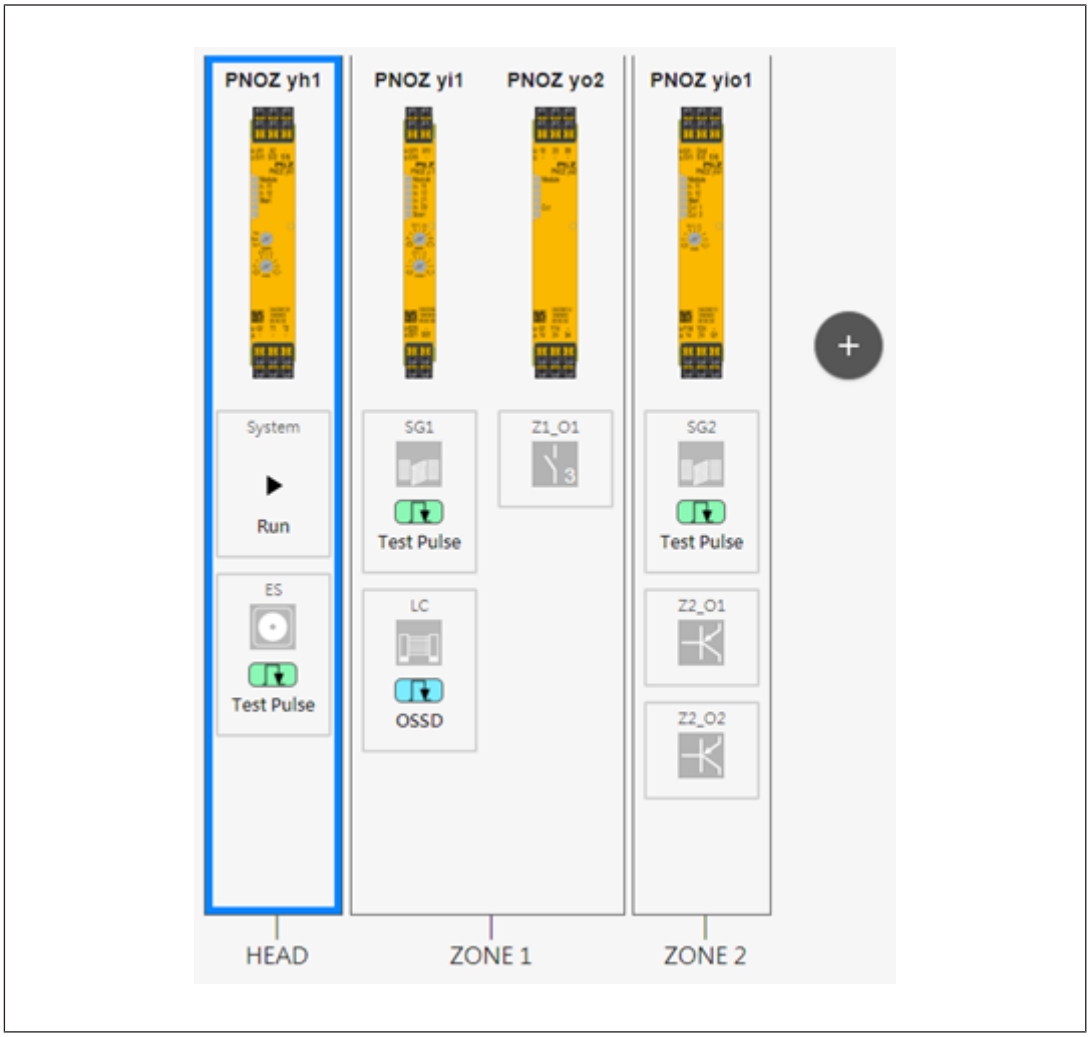

Head

- Head module PNOZ yh1 for the two E-STOP pushbuttons ES1 and ES2 (connected in series)

Zone 1

- Input module PNOZ yi1 for the safety gate SG1 and the light curtain LC
- Output module PNOZ yo2 for the relay output

Zone 2

- Input and output module PNOZ yio1 for the safety gate switch SG2 and the semiconductor outputs

The head module and expansion modules are connected in the above sequence using the bus connectors. Through this sequence, the input on the head module is AND-liked to the inputs on the expansion module PNOZ yi1. The link affects the safe relay output on the expansion module PNOZ yo2. Likewise, the input on the head module is AND-linked to the input on the expansion module PNOZ yio1 and affects the safe semiconductor output on the PNOZ yio1.

You can check the settings of the rotary switch for the start type

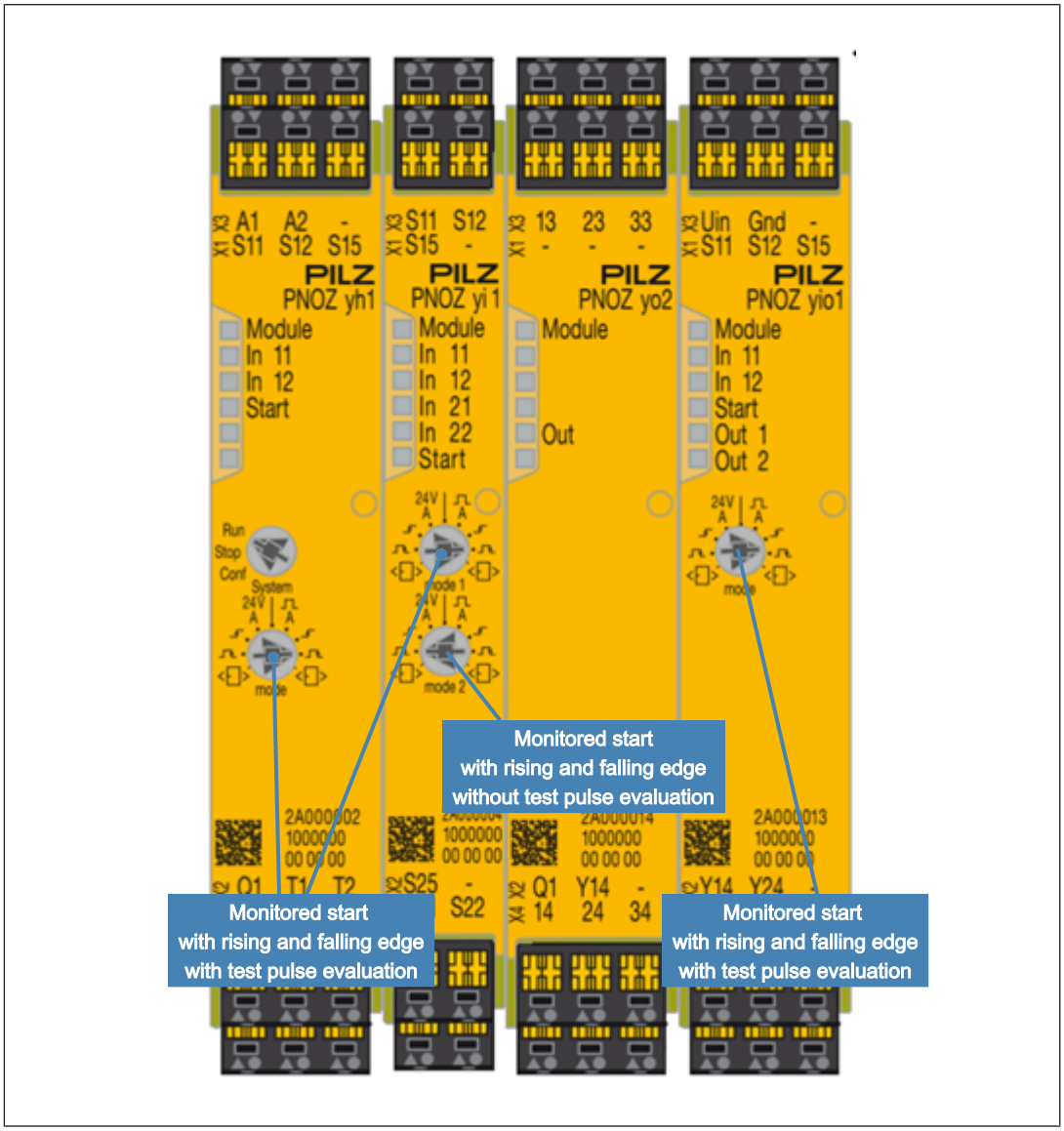

5.3 Display, save and order myPNOZ configuration

The pre-configured myPNOZ is mapped out in the myPNOZ Creator, including parts list, and can be saved, shared, printed as a PDF and ordered.

- **Wiring**
  A diagram in the myPNOZ Creator shows how to wire your myPNOZ (see Wire myPNOZ [📖 17]).
- **Shutdown matrix**
  The shutdown matrix shows how the outputs switch depending on the inputs

Cause			Effect
ES	SG1	LC	ZONE 1
1	1	1	1
0	1	1	0
1	0	1	0
1	1	0	0

Cause		Effect
ES	SG2	ZONE 2
1	1	1
0	1	0
1	0	0

Save and share configuration
You can create a URL for the project and save or share it. This will enable you to load the whole project and all its parameters at another time.

What's more, each configuration has a unique type code. Our example has the type code: myPNOZ.72.CKA380EB820AD000XB800
The type code can be used to call up the configuration again at any time.
However, only the modules and the settings on the rotary switches are saved.
All other details, such as any descriptions that have been entered, are not included in the type code.

- **Create PDF**
  You can create a PDF file, which contains all the information about your configuration.
- **Display order overview, select connection terminals**
  All the modules in your myPNOZ are displayed in the order overview.
  You can choose between 2 different plug-in connection terminals for the wiring
  – Spring-loaded terminals
  – Screw terminals
- **Submit order**
  You can then place an order directly via the Pilz E-Shop.

Once you've ordered you'll receive a fully configured and tested myPNOZ, which you can wire and install and then put into service directly. There is a QR code on the left-hand side of the head module so that you can change or re-order the configuration at a later date. The QR code leads you directly to your configuration in the myPNOZ Creator.

6 Calculating the safety-related characteristic data

The safety-related characteristic values of the input, logic and output must always be taken into account for calculating the safety-related characteristic data of a safety function on the myPNOZ. The safety-related characteristic data of the connected sensors and actuators must also be taken into account. They are not considered here, as they depend on the respective application.

- All inputs of the same type have identical safety-related characteristic data.
- All outputs of the same type have identical safety-related characteristic data.
- The head module specifies the safety-related characteristic data of the logic.
- The input on the head module is evaluated as any other input of the same type.
- Each safety function is considered separately.
- A module's position has no influence on the safety-related characteristic data

Calculating the safety-related characteristic data for the safety functions

The safety level of a safety function on the myPNOZ is always the result of the values for input + logic + output, irrespective of the position of the modules. If all the inputs and outputs shown in the examples were of the same type, then the safety level of the safety function for all examples would also be identical.

Global E-STOP safety function – Relay output

When the global E-STOP is triggered, the relay output switches and the processing unit goes to stop state.

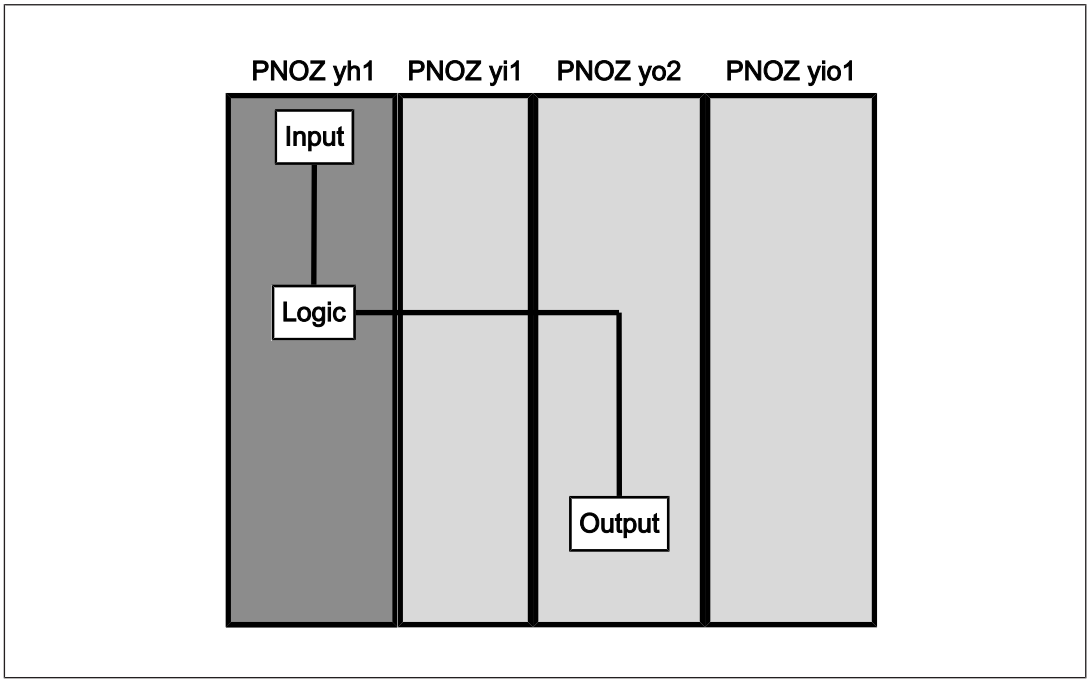

Global E-STOP safety function – Semiconductor outputs

When the global E-STOP is triggered, the semiconductor outputs switch and the packaging unit goes to stop state.

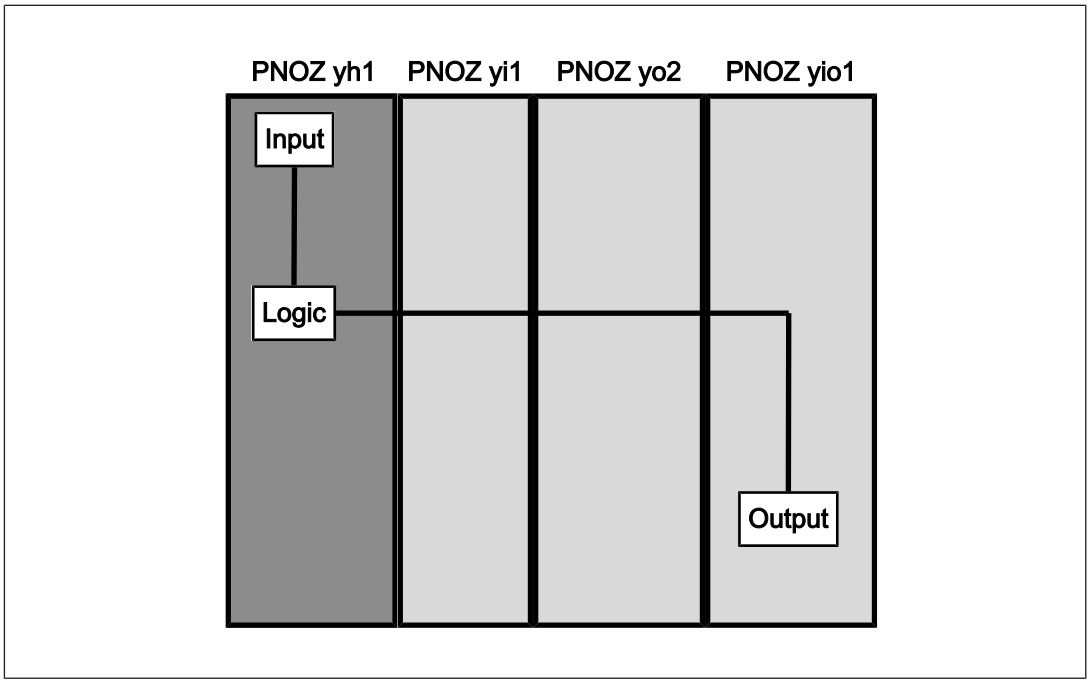

Safety gate/light curtain safety functions – Relay output

When the safety gate is opened or the light curtain is interrupted, the relay output switches and the processing unit goes to stop state.

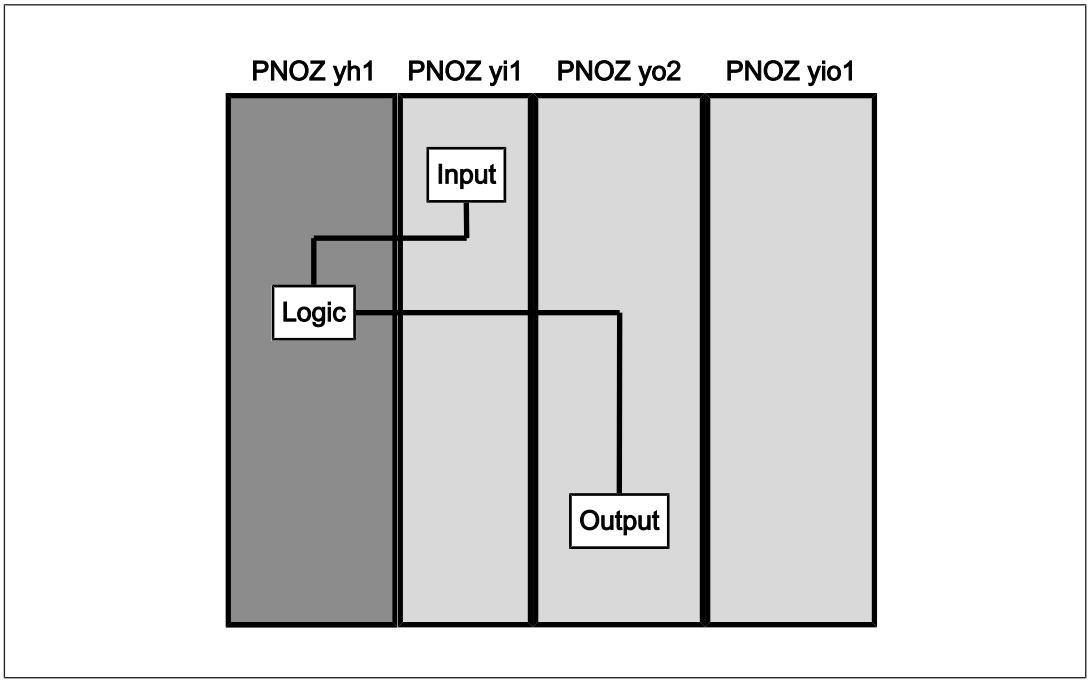

Safety gate safety function – Semiconductor outputs

When the hatch is opened, the semiconductor outputs switch and the packaging unit goes to stop state.

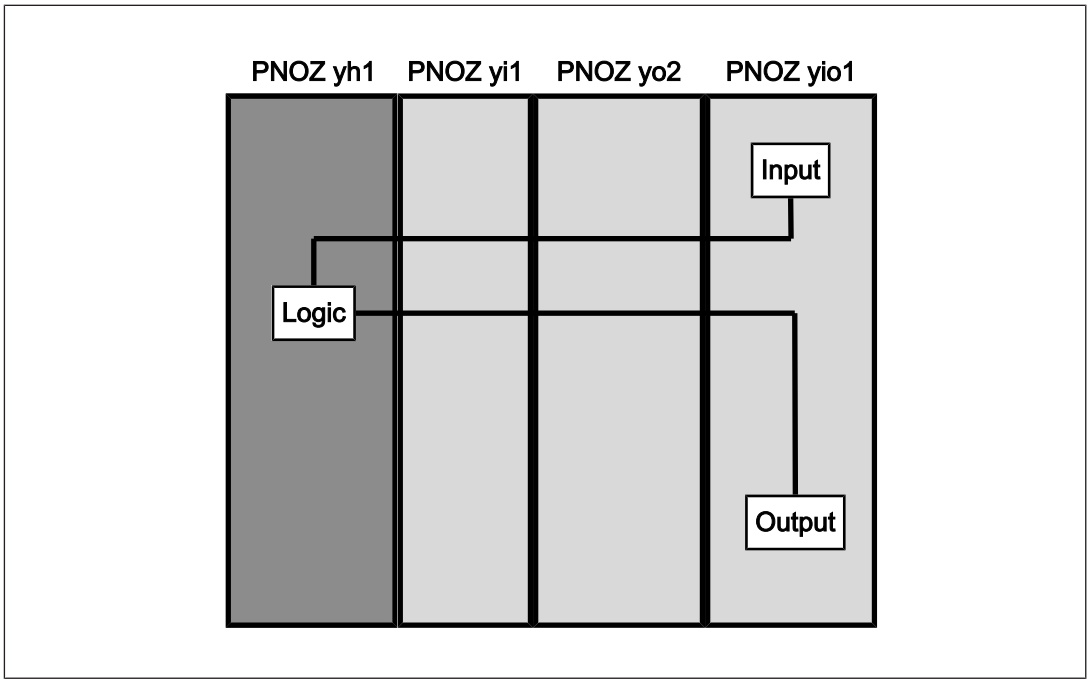

7 Wire myPNOZ

A wiring diagram for your myPNOZ is generated in the myPNOZ Creator.

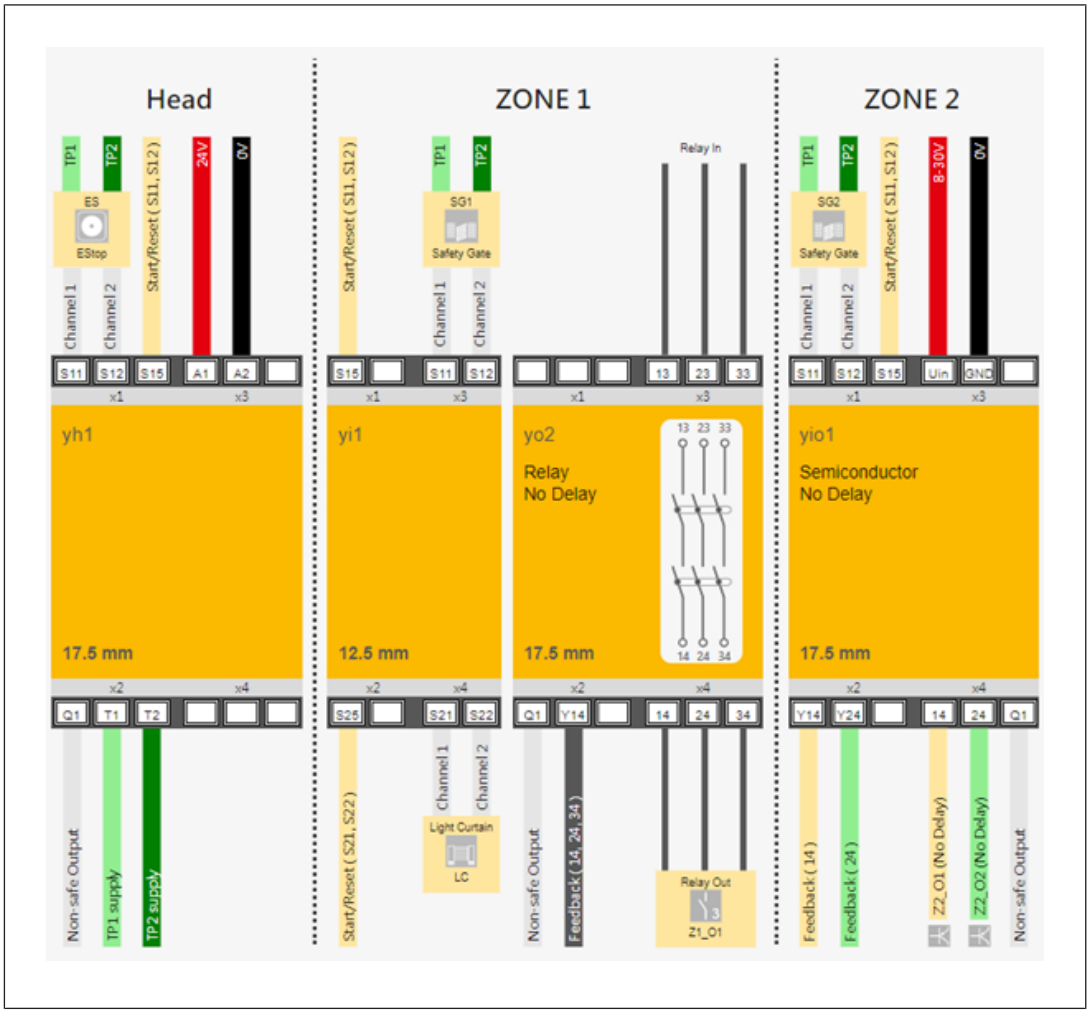

8 Install myPNOZ

The modules are supplied pre-connected. All that’s needed is to install the myPNOZ on the mounting rail.

Prerequisites

- The control cabinet must be at least protection type IP54.

Procedure

- Open the locking slides on the back of the modules

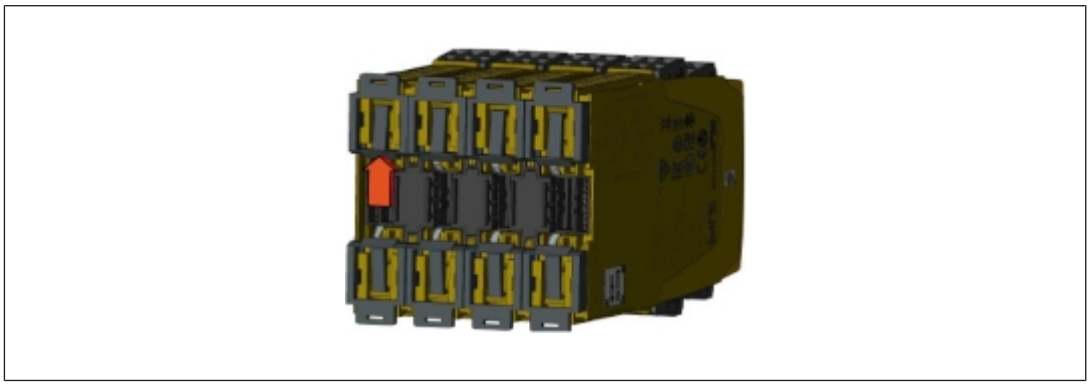

- Place the modules on the mounting rail and attach them to the mounting rail using the locking slides.
- Install fixing element

  When installed vertically or in environments exposed to heavy vibration, the myPNOZ should be secured using a fixing element (e.g. retaining bracket or end angle).

9 Commission myPNOZ

Prerequisites:

- The myPNOZ is installed and wired correctly.

Procedure:

1. Switch on the supply voltage.
2. Move the rotary switch ***System*** to the ***Run*** position.



The myPNOZ runs through an initialisation phase. It carried out self checks, establishes the connection between the modules and tests the configuration. The ***Module*** LED on the head module flashes green. Once initialisation is completed successfully, the myPNOZ goes into operation and switches all the outputs in accordance with the configured logic. The ***Module*** LEDs light up green. Potential status and error messages can be found under Diagnostics [📖 21].



NOTICE

The safety function should be checked after initial commissioning and each time the plant/machine is changed. The safety functions may only be checked by qualified personnel.

10 Change configuration

Expansion modules can be exchanged or expansion modules can be removed or added. The settings on the rotary switches can be changed. Always refer to the rules for the structure of the myPNOZ.

Procedure:

1. Set the rotary switch ***System*** on the head module to ***Conf.*** All the outputs are switched off.



2. You can now make the following changes:
   - Exchange expansion modules or insert new expansion modules
   - Change or reset the start type on the rotary switch ***mode***

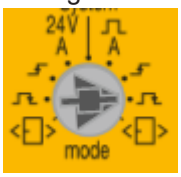

3. If you have not already done so, switch on the supply voltage.
4. Save the configuration: If the rotary switch ***System*** on the head module is set to ***Conf***, the changed configuration will automatically be saved if no changes are made for 5 s. If the set configuration is faulty, all the module LEDs will flash orange-green and the function LEDs will indicate the reason for the faulty configuration (see Diagnostics [📖 21]). The configuration was not saved. Correct the configuration and save it again.
5. Set the rotary switch ***System*** to ***Run*** and check the safety functions.

11 Diagnostics

The LEDs on the head module and expansion modules indicate the status of the modules and report on operating states as well as external and internal errors. The ***Module*** LED indicates the status of the module; the function LEDs (In, Out, Start) indicate the status of the inputs and outputs.

Legend

- LED off
- LED on
- LED flashes in one colour (500 ms on, 500 ms off)
- LED flashes in two colours (500 ms in colour 1, 500 ms in colour 2)
- LED flashes inversely in one colour (LED 1: 500 ms off, 500 ms on, LED 2: 500 ms on, 500 ms off)
- LED flashes quickly (50 ms on, 950 ms off)

11.1 Status messages

These messages provide information about the status of the myPNOZ and the inputs/outputs.

Status messages during initialisation

After the myPNOZ is started there is a brief initialisation phase.

Module LED	Function LED	Meaning
Quickly flashes green	All LEDs off	Initialisation

Status messages during operation (RUN)

During operation, where there are no errors present, the states of the inputs and outputs are displayed. The Module LED light up green. If the colour of the Module LED turns orange, this is a warning about one of the following errors:

- Supply voltage increased or low
- Supply voltage to semiconductor outputs increased or low
- Temperature increased or low
- Connection between modules disturbed by external influences

myPNOZ only switches to an error state when the error means that a limit value is exceeded. If the error is no longer present, the Module LED switches back to green.

Module LED	Function LED	Meaning
 Lights up green (orange)	 Input LED lights up green	Input active
	 Input LED off	Input inactive
	 Input LED flashes green (both)	Both LEDs flash alternately: ▸ Only one input was operated (partial operation) ▸ Only one input was deactivated ▸ With two-hand control: simultaneity not maintained ▸ Two-hand operated, however start conditions are not met (e.g. E-STOP pushbutton operated or switch-off delay active)
	 Start LED lights up green	Start input active
	 Start LED off	Start input inactive
	 Start LED flashes green	▸ Application can be started, waiting for start signal ▸ When starting with start-up test: Start-up test not performed yet
	 Output LED lights up green	Output active
	 Output LED off	Output inactive

Status indicator in STOP state

If myPNOZ is in a STOP state, the states of the inputs and outputs are displayed. All the module LEDs in one zone flash identically. The module LEDs in the following zone flash inversely.

If an error occurs, the module LED switches its colour from green to orange. Errors may be:

- Supply voltage increased or low
- Supply voltage to semiconductor outputs increased or low
- Temperature increased or low

If the error is no longer present, the LED switches back to green. If the error means that a limit value is exceeded, myPNOZ switches to an error state.

Module LED	Function LED	Meaning
 Flashes green (orange)	 Input LED lights up green	Input active
	 Input LED off	Input inactive
	 Start LED lights up green	Start input active
	 Start LED off	Start input inactive
	 Output LED lights up green	Output active (delay time not yet elapsed)
	 Output LED off	Output inactive

11.2 Error messages

The Module LED on the affected module displays various types of error messages. The function LEDs provide additional information about the cause of the error. If an error occurs on the head module, then all modules are affected by the error. If the error occurs on an expansion module, then only the zone to which the expansion module belongs is affected.

“Error” error messages

“Error” type error messages are mostly wiring errors or errors based on a failure to comply with the technical details. In the event of this type of error

- All safe outputs are switched off within the reaction time
- All delayed safe outputs are switched off once the delay time has elapsed
- The safe outputs that are affected by the error are switched off immediately
- All signal outputs are switched off within the reaction time

Once the error has been rectified, the rotary switch ***System*** must be set first to ***Stop*** and then to ***Run*** or the supply voltage must be switched off and on again.

Module LED	Function LED	Meaning	Remedy
 Flashes red	 All LEDs off	LED on the head module flashes red: – Supply voltage on the head module > 28.8V – Supply voltage on the head module < 19.2V – Rotary switch ***System*** in invalid intermediate position LED flashes red: – Temperature too high or too low	Keep within the permitted supply voltage range (see module’s technical details) Correct the position of the rotary switch Keep within the temperature range (see module’s technical details)
 Flashes red	 Input LED lights up green	Input active	
 Flashes red	 Input LED off	Input inactive	
 Flashes red	 Input1 LED flashes green	Test pulse T1 not detected at the input	Check the test pulse wiring for short circuits to 24 VDC and to other test pulses; rectify error

Module LED	Function LED	Meaning	Remedy
 Flashes red	 Input2 LED flashes green	Test pulse T2 not detected at the input	Check the test pulse wiring for short circuits to 24 VDC and to other test pulses, rectify error
 Flashes red	 Start LED lights up green	Start input is active	
 Flashes red	 Start LED off	Start input inactive	
 Flashes red	 Output LED lights up green	Output active (delay time not yet elapsed)	
 Flashes red	 Output LED off	Output inactive	

Module LED	Function LED	Meaning	Remedy
 Flashes red	 Output LED flashes green	Error at the output ▸ Output LED flashes (or both LEDs flash simultaneously) – Feedback loop is not closed when starting or attempting to switch on – Output is switched off, but there is still voltage at the output ▸ Both LEDs flash alternately – Total current at the semiconductor outputs of an I/O module too high – Supply voltage at the semiconductor output of an I/O module too high – Total current at the semiconductor outputs of an I/O module briefly very high – Short circuit between two semiconductor outputs on a module – Short circuit between semiconductor output and GND	 – Check wiring of feedback loop, rectify error – Check wiring of output for short circuits, rectify error – Keep within the permitted supply voltage range (see module's technical details) – Rectify short circuit – Rectify short circuit

Configuration error messages

myPNOZ regularly checks the configuration. If any deviation from the saved configuration is established, myPNOZ signals a configuration error. Configuration errors generally arise due to an unsaved configuration. For example, the position of a rotary switch was changed, but the configuration was not saved afterwards. In the event of this type of error

- All safe outputs are switched off
- All signal outputs are switched off

Once a configuration error has been rectified, the configuration must be re-saved and then the rotary switch ***System*** set to ***Run*** (see Change configuration). If the position of a rotary switch was changed accidentally, the position of the rotary switch must be corrected. It is not necessary to save the configuration again.

Module LED	Function LED	Meaning	Remedy
 Flashing orange green	 All LEDs off	When the configuration is saved: – Module saved in the configuration, but not available Saving of the current configuration failed	– Check that all modules are inserted in the right sequence – Check whether modules are indicating a communication error (Module LED flashes red-orange) – If the required configuration is set, save this configuration Save configuration

Module LED	Function LED	Meaning	Remedy
 Flashing orange green	 All LEDs on a module are quickly flashing green	When the configuration is saved: – Module type does not match the saved configuration – More modules than saved in the configuration When saving of the current configuration has failed: – Last module without output – Head module does not recognise the module type of the expansion module – More than eight expansion modules – Firmware version of head module and expansion module not compatible	– Check that all modules are inserted in the right sequence – Set the required configuration and save it – Check if there is a module with an output at the last position – Check whether modules are indicating a communication error (Module LED flashes red-orange) – Check whether there are more than eight expansion modules – Check the compatibility of the firmware versions (see data sheets)
 Flashing orange green	 A module's input LEDs are flashing green (both)	Configuration error at the input When the configuration is saved: – Position of the rotary switch ***mode*** does not match the saved configuration When saving of the current configuration has failed: – The rotary switch ***mode*** position is in an invalid intermediate position	Check the position of the rotary switch, configure the position and save the configuration – Check the position of the rotary switch and correct the position

Module LED	Function LED	Meaning	Remedy
 Flashing orange green	 Output LED on a module is flashing green	Configuration error at the output: – Position of the rotary switch ***n*** does not match the saved configuration – Position of the rotary switch ***t[s]*** does not match the saved configuration When saving of the current configuration has failed: – Rotary switch ***n*** or ***t[s]*** is in an intermediate position, which is not permitted	Check the position of the rotary switches, configure the position and save the configuration – Check the position of the rotary switch and correct the position

“Internal error” error message

If this error occurs

- All safe outputs are switched off
- All signal outputs are switched off
- Communication is interrupted and subsequent modules indicate a communication error

This error cannot be rectified. Please exchange the affected module or contact Pilz.

Module LED	Function LED	Meaning	Remedy
 Lights up red	 All LEDs off	Internal error	Exchange module or contact Pilz

Communication error message

Communication errors occur when communication between the head module and expansion module is disrupted. In the event of this type of error

- All safe outputs are switched off
- All signal outputs are switched off

Once the connection is stable again and no further errors are present, myPNOZ switches to a STOP state. The rotary switch ***System*** must first be set to ***Stop*** and then to ***Run***.

Module LED	Function LED	Meaning	Remedy
 Flashes red-orange	 All LEDs off	No connection to the head module	Check whether the bus connectors are firmly inserted between the modules

11.3 Errors on the safe outputs

- Malfunctions of the relay contacts: if the contacts have welded, reactivation will not be possible after the input circuit has opened.
- In the case of an error, the delayed outputs may open before the delay time has elapsed.

Support

Technical support is available from Pilz round the clock.

Americas
Brazil
+55 11 97569-2804
Canada
+1 888 315 7459
Mexico
+52 55 5572 1300
USA (toll-free)
+1 877-PILZUSA (745-9872)

Asia
China
+86 21 60880878-216
Japan
+81 45 471-2281
South Korea
+82 31 778 3300

Australia and Oceania
Australia
+61 3 95600621
New Zealand
+64 9 6345350

Europe
Austria
+43 1 7986263-0
Belgium, Luxembourg
+32 9 3217570
France
+33 3 88104003
Germany
+49 711 3409-444
Ireland
+353 21 4804983
Italy, Malta
+39 0362 1826711
Scandinavia
+45 74436332
Spain
+34 938497433
Switzerland
+41 62 88979-32
The Netherlands
+31 347 320477
Turkey
+90 216 5775552
United Kingdom
+44 1536 462203

You can reach our international hotline on:
+49 711 3409-222
support@pilz.com

Pilz develops environmentally-friendly products using ecological materials and energy-saving technologies. Offices and production facilities are ecologically designed, environmentally-aware and energy-saving. So Pilz offers sustainability, plus the security of using energy-efficient products and environmentally-friendly solutions.

BLUEECOMPETENCE Alliance Member
Partner of the Engineering Industry Sustainability Initiative

BRANDS OF THE CENTURY PILZ 2019 GERMAN STANDARDS

Quality Management ISO 9001:2015 REG. NO. 2462
Environmental Management ISO 14001 REG. NO. 2462
Energy Management ISO 50001 REG. NO. 2462

1005615-EN-02, 2021-03 Printed in Germany
© Pilz GmbH & Co. KG, 2019

CECE®, CHRE®, CMSE®, InduraNET p®, Leansafe®, Master of Safety®, Master of Security®, PAS4000®, PAScal®, PASconfig®, Pilz®, PIT®, PLID®, PMCprimo®, PMCprotego®, PMCtendo®, PMD®, PMI®, PNOZ®, PRBT®, PRCM®, Primo®, PRTM®, PSEN®, PSS®, PVIS®, SafetyBUS p®, SafetyEYE®, SafetyNET p®, THE SPIRIT OF SAFETY® are registered and protected trademark of Pilz GmbH & Co. KG in some countries. We would point out that product features may vary from the details stated in this document, depending on the status at the time of publication and the scope of the equipment. We accept no responsibility for the validity, accuracy and entirety of the text and graphics presented in this information. Please contact our Technical Sup if you have any questions.

We are represented internationally. Please refer to our homepage www.pilz.com for further details or contact our headquarters.

Headquarters: Pilz GmbH & Co. KG, Felix-Wankel-Straße 2, 73760 Ostfildern, Germany
Telephone: +49 711 3409-0, Telefax: +49 711 3409-133, E-Mail: info@pilz.com, Internet: www.pilz.com

PILZ
THE SPIRIT OF SAFETY