SAFYBOX BRES ACCESSORIES

PADLOCK DEVICES

Padlocking devices for manual installation on the lock itself, the lock must be dismantled for the installation

Code	Description	Weight - Kg
CBC-13-in	Lock for securing a padlock device, STAINLESS steel (1 un)	0,12
CBC-13	Lock for securing a padlock device, bichromate steel (1 un)	0,10

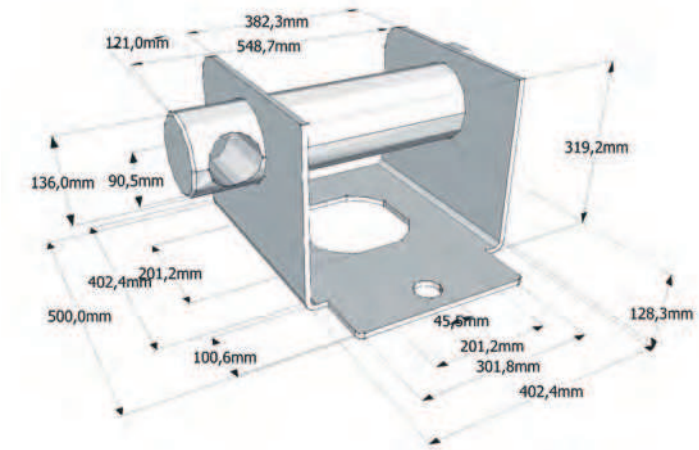

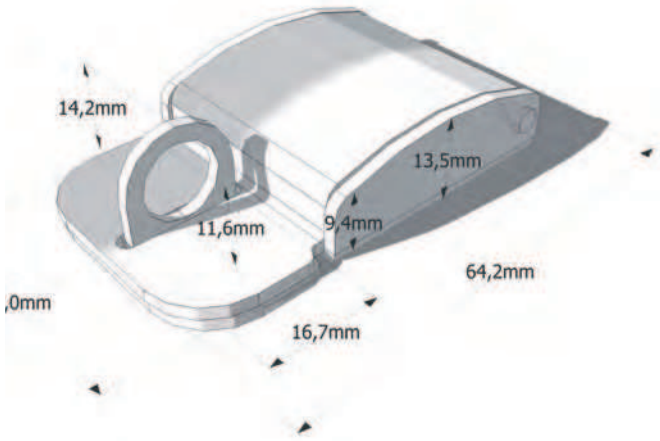

BRES-43P

