Angled compression cable lugs, Cu, 90° angled



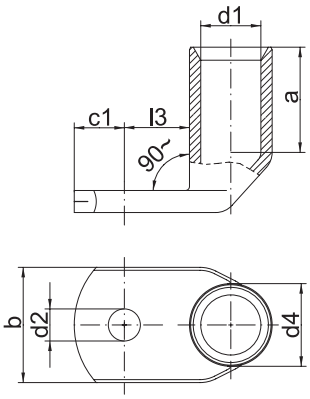

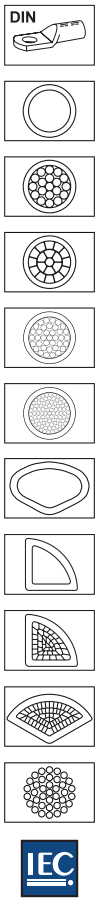

- For round conductors, e.g. to DIN EN 60228 Cl. 1, 2, 5 and 6
- For non-tension copper cables, e.g. to DIN 48201-1
- For pre-rounded multi-stranded sector shaped conductors
- Tube dimensions according to DIN 46235
- With code number for clear tool assignment

Characteristics

- With crimp markings for correct crimp positioning
- Simple and safe connection due to flat contact surfaces and internal chamfer
- Annealed material optimises material and crimping properties

Material

- Copper (EN13600)

Surface

- Tin-plated to protect against corrosion

Technical instructions

- Sleeves for compacted conductors and sleeves for 3-core and 4-core cables, see chapter „Sleeves for compacted conductors and sector shaped conductors - Cu“
- Tool: see page 69

Additional information

- Part Number appendix for bright version „BK“
- 10 - 240 mm² IEC-tested

Nominal cross section mm²	Size of bolt diameter	Part No.	Code	Dimension mm							Weight/ 100 pcs. ~ kg	Packing unit/pcs
				a	b	d1	d2	d4	c1	l3		
6	M 5	**161R5**	5	10	8.5	3.8	5.3	5.5	6.5	9	0.28	50
	M 6	**161R6**	5	10	8.5	3.8	6.4	5.5	7.5	10	0.32	50
10	M 5	**162R5**	6	10	9.0	4.5	5.3	6.0	7.0	10	0.34	50
	M 6	**162R6**	6	10	9.0	4.5	6.4	6.0	7.5	10	0.35	50
	M 8	**162R8**	6	10	13.0	4.5	8.4	6.0	10.0	13	0.37	50
16	M 6	**163R6**	8	20	13.0	5.5	6.4	8.5	7.5	11	1.20	50
	M 8	**163R8**	8	20	13.0	5.5	8.4	8.5	10.0	13	1.30	50
	M 10	**163R10**	8	20	17.0	5.5	10.5	8.5	12.0	15	1.40	50
	M 12	**163R12**	8	20	18.0	5.5	13.0	8.5	13.0	18	1.33	50
25	M 6	**164R6**	10	20	14.0	7.0	6.4	10.0	7.5	11	1.54	25
	M 8	**164R8**	10	20	16.0	7.0	8.4	10.0	10.0	13	1.60	25
	M 10	**164R10**	10	20	17.0	7.0	10.5	10.0	12.0	15	1.63	25
	M 12	**164R12**	10	20	19.0	7.0	13.0	10.0	13.0	18	1.70	25
35	M 8	**165R8**	12	20	17.0	8.2	8.4	12.5	10.0	13	2.72	25
	M 10	**165R10**	12	20	19.0	8.2	10.5	12.5	12.0	15	2.76	25
	M 12	**165R12**	12	20	21.0	8.2	13.0	12.5	13.0	18	2.85	25
	M 14	**165R14**	12	20	21.0	8.2	15.0	12.5	14.5	20	2.92	25
50	M 8	**166R8**	14	28	20.0	10.0	8.4	14.5	10.0	16	4.39	25
	M 10	**166R10**	14	28	22.0	10.0	10.5	14.5	12.0	16	4.46	25
	M 12	**166R12**	14	28	24.0	10.0	13.0	14.5	13.0	18	4.49	25
	M 14	**166R14**	14	28	24.0	10.0	15.0	14.5	14.5	20	4.73	25
	M 16	**166R16**	14	28	28.0	10.0	17.0	14.5	16.0	22	4.66	25

see next page

Angled compression cable lugs, Cu, 90° angled

Nominal cross section mm²	Size of bolt diameter	Part No.	Code	Dimension mm							Weight/ 100 pcs. ~ kg	Packing unit/pcs
				a	b	d1	d2	d4	c1	l3		
70	M 8	**167R8**	16	28	24.0	11.5	8.4	16.5	10.0	14	5.92	25
	M 10	**167R10**	16	28	24.0	11.5	10.5	16.5	12.0	16	6.31	25
	M 12	**167R12**	16	28	24.0	11.5	13.0	16.5	13.0	18	6.34	25
	M 14	**167R14**	16	28	24.0	11.5	15.0	16.5	14.5	20	6.50	25
	M 16	**167R16**	16	28	30.0	11.5	17.0	16.5	16.0	22	6.63	25
95	M 10	**168R10**	18	35	28.0	13.5	10.5	19.0	12.0	17	9.03	25
	M 12	**168R12**	18	35	28.0	13.5	13.0	19.0	13.0	18	9.27	25
	M 14	**168R14**	18	35	28.0	13.5	15.0	19.0	14.5	20	9.06	25
	M 16	**168R16**	18	35	32.0	13.5	17.0	19.0	16.0	22	9.18	25
120	M 10	**169R10**	20	35	32.0	15.5	10.5	21.0	15.0	17	10.41	10
	M 12	**169R12**	20	35	32.0	15.5	13.0	21.0	16.0	18	10.65	10
	M 14	**169R14**	20	35	32.0	15.5	15.0	21.0	18.0	20	10.75	10
	M 16	**169R16**	20	35	32.0	15.5	17.0	21.0	19.0	22	10.72	10
	M 20	**169R20**	20	35	38.0	15.5	21.0	21.0	21.0	24	11.00	10
150	M 10	**170R10**	22	35	34.0	17.0	10.5	23.5	15.0	17	14.18	10
	M 12	**170R12**	22	35	34.0	17.0	13.0	23.5	16.0	18	14.33	10
	M 14	**170R14**	22	35	34.0	17.0	15.0	23.5	19.0	20	15.60	10
	M 16	**170R16**	22	35	34.0	17.0	17.0	23.5	19.0	22	15.24	10
	M 20	**170R20**	22	35	40.0	17.0	21.0	23.5	21.0	24	15.70	10
185	M 10	**171R10**	25	40	37.0	19.0	10.5	25.5	15.0	22	18.60	10
	M 12	**171R12**	25	40	37.0	19.0	13.0	25.5	16.0	22	18.69	10
	M 14	**171R14**	25	40	37.0	19.0	15.0	25.5	19.0	22	19.10	10
	M 16	**171R16**	25	40	37.0	19.0	17.0	25.5	19.0	22	19.00	10
	M 20	**171R20**	25	40	40.0	19.0	21.0	25.5	21.0	24	18.72	10
240	M 12	**172R12**	28	40	42.0	21.5	13.0	29.0	16.0	22	25.09	10
	M 14	**172R14**	28	40	42.0	21.5	15.0	29.0	19.0	22	25.70	10
	M 16	**172R16**	28	40	42.0	21.5	17.0	29.0	19.0	22	24.96	10
	M 20	**172R20**	28	40	45.0	21.5	21.0	29.0	21.0	24	25.26	10