Cable split core current transformer, type KBU, class 0,5 and 1

Features / benefits



- Ideal for retrospective installation in existing systems
- Simple and secure attachment - current transformer audibly latches
- Available with secondary current 5 A / 1 A
- Also available in accuracy class 0.5
- Four different configurations
- Working temperature range: -5°C < T < +50°C
- Storage temperature range -25°C < T < +70°C
- Therm. nominal continuous current I_{cth}: 1,0 x I_N
- Therm. nominal short-time current I_{th}: 60 x I_N, 1 sec.
- Max. supply voltage U_m: 0,72 kV
- Insulation test voltage: 3 kV, U_{eff}, 50 Hz, 1 min.
- Nominal frequency: 50 Hz
- Insulation class: E
- Applied technical standards: DIN EN 61869, part 1 + 2

Technical data

Cable split core current transformer, type KBU											
Type	Primary current in A	Secondary current in A	Power in VA	Class	Dimensions in mm					Weight (kg)	Item no.
					A	B	C / C1	D	E		
KBU 58	250	5	1.5	1	125	158	34 / 58	55	85	0.9	**15.02.316**
KBU 58	400	5	1	0.5	125	158	34 / 58	55	85	0.9	**15.02.868**
KBU 58	500	5	2.5	0.5	125	158	34 / 58	55	85	0.9	**15.02.819**
KBU 58	600	5	2.5	0.5	125	158	34 / 58	55	85	1.0	**15.02.315**
KBU 58	1000	5	5	0.5	125	158	34 / 58	55	85	1.0	**15.02.320**
KBU 812	600	5	2.5	0.5	155	198	34 / 58	85	125	1.3	**15.02.869**
KBU 812	800	5	2.5	0.5	155	198	34 / 58	85	125	1.3	**15.02.870**
KBU 812	1000	5	5	0.5	155	198	34 / 58	85	125	1.3	**15.02.871**
KBU 812	1250	5	7,5	0.5	155	198	34 / 58	85	125	1.3	**15.02.328**

Dimension diagrams

All dimensions in mm

KBU 58

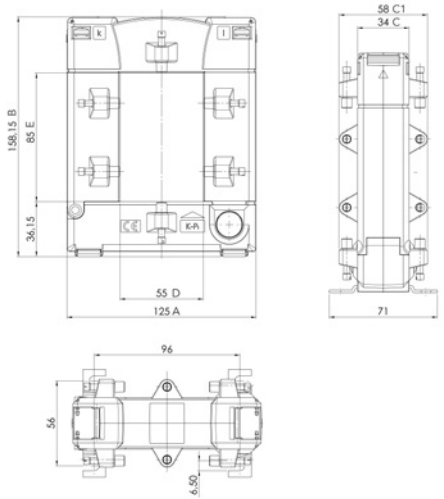

KBU 812

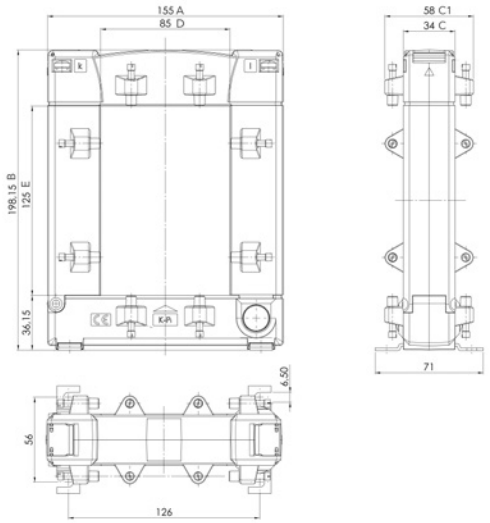

Basic Information for the use of current transformer can be found in chapter 10.

Janitza®