Cable split core current transformers

Innovative and reliable

- Particularly well suited to digital measurement devices
- Especially fast installation
- For applications with insulated cable up to 2 x 42 mm max.
- Transformation ratio of 60 ... 1000 / 1 A or 150 ... 1,000 / 5 A
- Including color-coded secondary cables
- Additional fastening of the transformer with the two UV-resistant cable ties provided
- Especially suited for retrofitting, primary circuit must not be disconnected
- Ideal for use in very compact installation spaces



Fig.: Type KUW4.2/60

Dimension diagrams

All dimensions in mm

KUW1/30

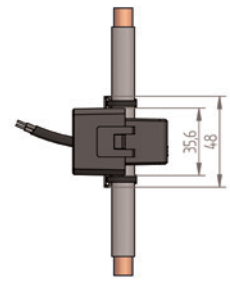

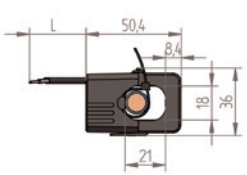

KUW1/40

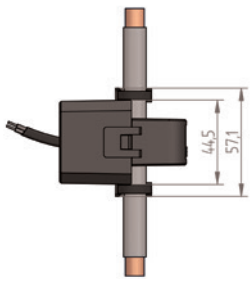

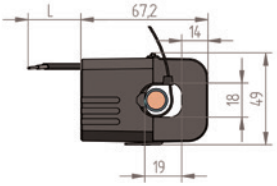

KUW2/40

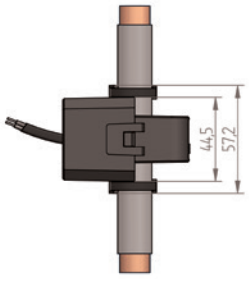

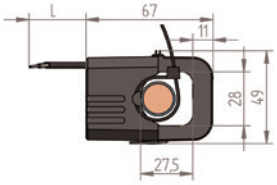

Technical data

Environmental conditions	
Position of installation	**For indoor usage, only for insulated cables**
Ambient temperature	-10 ... +55 °C
Relative humidity	5 ... 85 % (no condensation)
Protection class	IP20
Application conditions	
Standard	IEC 61869-2
Thermal short time rated current	60 x In / 1 s
Thermal continuous current	100 %
Rated isolation level	0.72 / 3 / kV
Rated frequency	50 / 60 Hz
Insulation class	E (120 °C)
Cable feed through window	For conductors max. Ø 18 / 28 / 42 or 2 x 42 mm
Secondary conductor	... / 1 A: 0.5 mm² ... / 5 A: 1.5 mm²

KUW4/60

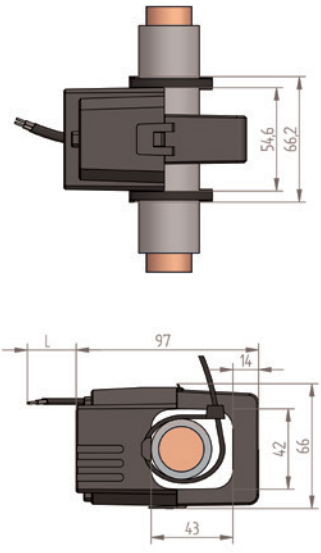

KUW4.2/60

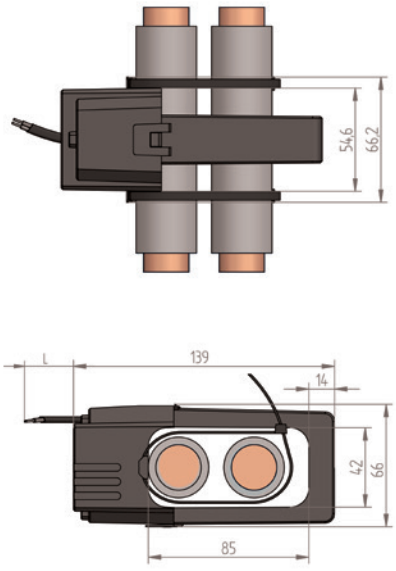

Basic Information for the use of current transformer can be found in chapter 10.

Series KUW1 for insulated cable up to max. 18 mm diameter								
Type	Primary current in A	Secondary current in A	Power in VA (at the end of the wire)	Class	Cable length in m	Diameter Primary conductor in mm	Weight (kg)	Item no.
KUW1/30-60	60	1	0.2	3	3	18	0.3	**15.03.510**
KUW1/30-75	75	1	0.2	3	3	18	0.3	**15.03.511**
KUW1/30-100	100	1	0.2	3	3	18	0.3	**15.03.512**
KUW1/30-125	125	1	0.2	3	3	18	0.3	**15.03.513**
KUW1/30-150	150	1	0.2	3	3	18	0.3	**15.03.514**
KUW1/30-200	200	1	0.2	1	3	18	0.3	**15.03.515**
KUW1/30-250	250	1	0.2	1	3	18	0.3	**15.03.317**
KUW1/40-100	100	1	0.2	1	3	18	0.4	**15.03.320**
KUW1/40-125	125	1	0.2	1	3	18	0.4	**15.03.321**
KUW1/40-150	150	1	0.2	1	3	18	0.4	**15.03.322**
KUW1/40-200	200	1	0.2	0.5	3	18	0.4	**15.03.325**
KUW1/40-250	250	1	0.2	0.5	3	18	0.4	**15.03.326**
KUW1/40-150	150	5	1	1	0.5	18	0.4	**15.03.329**
KUW1/40-200	200	5	1	1	0.5	18	0.4	**15.03.330**
KUW1/40-250	250	5	1	0.5	0.5	18	0.4	**15.03.331**

Series KUW2 for insulated cable max. 28 mm diameter								
Type	Primary current in A	Secondary current in A	Power in VA (at the end of the wire)	Class	Cable length in m	Diameter Primary conductor in mm	Weight (kg)	Item no.
KUW2/40-200	200	1	0.2	1	3	28	0.3	**15.03.351**
KUW2/40-250	250	1	0.2	1	3	28	0.3	**15.03.352**
KUW2/40-300	300	1	0.2	1	3	28	0.3	**15.03.354**
KUW2/40-400	400	1	0.2	1	3	28	0.4	**15.03.356**
KUW2/40-500	500	1	0.2	0.5	3	28	0.4	**15.03.358**
KUW2/40-250	250	5	1	1	0.5	28	0.3	**15.03.353**
KUW2/40-300	300	5	1	1	0.5	28	0.3	**15.03.355**
KUW2/40-400	400	5	1	1	0.5	28	0.3	**15.03.357**
KUW2/40-500	500	5	1	1	0.5	28	0.3	**15.03.359**

Series KUW4/60 for insulated cable up to max. 42 mm diameter								
Type	Primary current in A	Secondary current in A	Power in VA (at the end of the wire)	Class	Cable length in m	Diameter Primary conductor in mm	Weight (kg)	Item no.
KUW4/60-250	250	1	0.5	1	5	42	0.6	**15.03.565**
KUW4/60-300	300	1	0.5	1	5	42	0.6	**15.03.566**
KUW4/60-400	400	1	0.5	0.5	5	42	0.6	**15.03.568**
KUW4/60-500	500	1	0.5	0.5	5	42	0.6	**15.03.570**
KUW4/60-600	600	1	0.5	0.5	5	42	0.6	**15.03.572**
KUW4/60-750	750	1	0.5	0.5	5	42	0.6	**15.03.574**
KUW4/60-800	800	1	0.5	0.5	5	42	0.6	**15.03.576**
KUW4/60-1000	1,000	1	0.5	0.5	5	42	0.6	**15.03.578**
KUW4/60-300	300	5	0.5	1	3	42	0.6	**15.03.367**
KUW4/60-400	400	5	0.5	1	3	42	0.5	**15.03.369**
KUW4/60-500	500	5	0.5	1	3	42	0.6	**15.03.371**
KUW4/60-600	600	5	0.5	0.5	3	42	0.5	**15.03.373**
KUW4/60-750	750	5	0.5	0.5	3	42	0.6	**15.03.375**
KUW4/60-800	800	5	0.5	0.5	3	42	0.6	**15.03.377**
KUW4/60-1000	1,000	5	0.5	0.5	3	42	0.6	**15.03.379**

Series KUW4.2/60 for insulated cable up to max. 2 x 42 mm diameter								
Type	Primary current in A	Secondary current in A	Power in VA (at the end of the wire)	Class	Cable length in m	Diameter Primary conductor in mm	Weight (kg)	Item no.
KUW4.2/60-250	250	1	0.5	1	5	42 x 84	0.7	**15.03.580**
KUW4.2/60-300	300	1	0.5	1	5	42 x 84	0.8	**15.03.581**
KUW4.2/60-400	400	1	0.5	0.5	5	42 x 84	0.7	**15.03.583**
KUW4.2/60-500	500	1	0.5	0.5	5	42 x 84	0.8	**15.03.585**
KUW4.2/60-600	600	1	0.5	0.5	5	42 x 84	0.7	**15.03.587**
KUW4.2/60-750	750	1	0.5	0.5	5	42 x 84	0.8	**15.03.589**
KUW4.2/60-800	800	1	0.5	0.5	5	42 x 84	0.8	**15.03.591**
KUW4.2/60-1000	1,000	1	0.5	0.5	5	42 x 84	0.8	**15.03.593**
KUW4.2/60-300	300	5	0.5	1	3	42 x 84	0.7	**15.03.382**
KUW4.2/60-400	400	5	0.5	1	3	42 x 84	0.8	**15.03.384**
KUW4.2/60-500	500	5	0.5	1	3	42 x 84	0.6	**15.03.386**
KUW4.2/60-600	600	5	0.5	0.5	3	42 x 84	0.7	**15.03.388**
KUW4.2/60-750	750	5	0.5	0.5	3	42 x 84	0.8	**15.03.390**
KUW4.2/60-800	800	5	0.5	0.5	3	42 x 84	0.8	**15.03.392**
KUW4.2/60-1000	1,000	5	0.5	0.5	3	42 x 84	0.8	**15.03.394**