TE‘s Raychem Cable Accessories

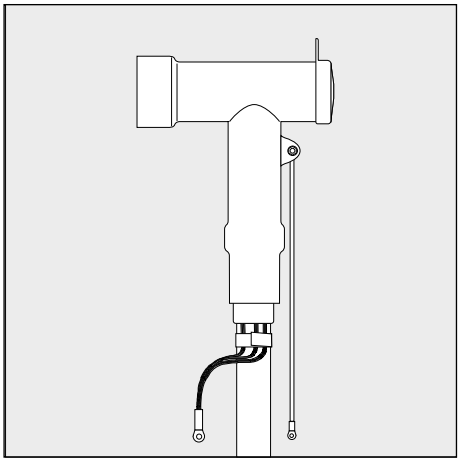

Installation Instructions EPP-0982-12/19

Screened Separable Connector 800 A for Bushing Profile “C” in Accordance to EN 50181, and Single Core Polymeric Insulated Cable 12 to 24 kV

Type: RSTI-58xx

Safety Warning:

It is essential to observe the applicable safety regulations for working with high voltage equipment.
For precise safety information please contact the responsible authority.

To view the TE Energy website:

Tyco Electronics Raychem GmbH
a TE Connectivity Ltd. Company
Finsinger Feld 1
85521 Ottobrunn/Munich, Germany
Tel: +49-89-6089-0
Fax: +49-89-6096-345
TE.com/energy

Before Starting

Check to ensure that the kit you are going to use fits the cable.

Refer to the kit label and the title of the installation instructions.

Components or working steps may have been modified since you last installed this product.

Carefully read and follow the steps in the installation instructions.

Kit Content

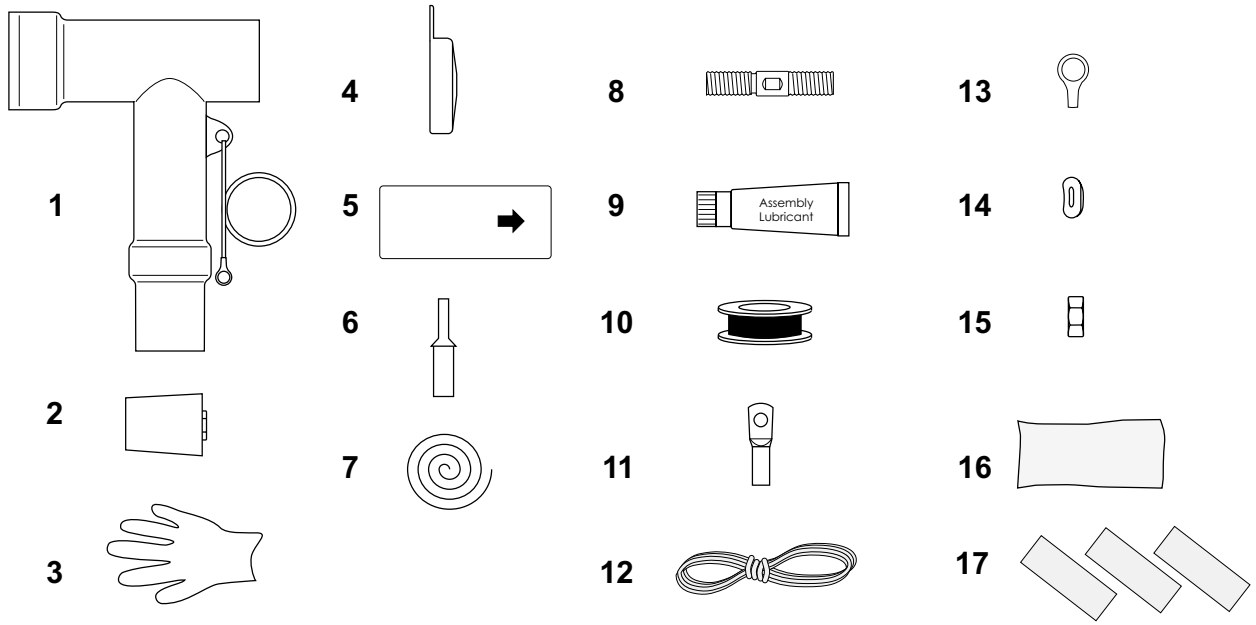

1	3 x Connector body	**4**	3 x Covering cap	**8**	3 x Threaded pin M16	**13**	3 x Screen cable lug
2	3 x Back plug	**5**	3 x Stress cone	**9**	1 x Assembly lubricant	**14**	3 x Wave type washer
3	3 x Gloves	**6**	3 x Main cable lug	**10**	1 x PVC tape	**15**	3 x Nut M16
		7	1 x Binding wire	**11**	3 x Cable lug (16 + 25)	**16**	3 x Protective bag
				12	1 x String	**17**	3 x Sealing tape (grey)

Table 1

Cross Section	Ø Core Insulation 12 kV		Reference No.		Cross Section	Ø Core Insulation 24 kV		Reference No.	
mm²	min	max	Al	Cu	mm²	min	max	Al	Cu
25	12.7-23.4		RSTI-5810	RSTI-5830	25	12.7-23.4		RSTI-5810	RSTI-5830
35			RSTI-5811	RSTI-5831	35			RSTI-5811	RSTI-5831
50			RSTI-5812	RSTI-5832	50			RSTI-5812	RSTI-5832
70			RSTI-5813	RSTI-5833	70			RSTI-5813	RSTI-5833
95			RSTI-5814	RSTI-5834	95	21.2-34.6		RSTI-5824	RSTI-5844
120			RSTI-5815	RSTI-5835	120			RSTI-5825	RSTI-5845
150	21.2-34.6		RSTI-5826	RSTI-5846	150			RSTI-5826	RSTI-5846
185			RSTI-5827	RSTI-5847	185			RSTI-5827	RSTI-5847
240			RSTI-5828	RSTI-5848	240			RSTI-5828	RSTI-5848
300			RSTI-5829	RSTI-5849	300			RSTI-5829	RSTI-5849
25-95	12.7-23.4		RSTI-5851		25-70	12.7-23.4		RSTI-5851	
95-120			RSTI-5852		-	-		-	
95-240	17.0-30.1		RSTI-5853		95-185	17.0-30.1		RSTI-5853	
150-240	21.2-34.6		RSTI-5854		95-240	21.2-34.6		RSTI-5854	
185 - 300			RSTI-5855		185-300			RSTI-5855	

The Information contained in these installation instructions is for use only by installers trained to make electrical power installations and is intended to describe the correct method of installation for this product. However, TE Connectivity has no control over the field conditions which influence product installation.
It is the user's responsibility to determine the suitability of the installation method in the user's field conditions.
TE Connectivity's only obligations are those in TE Connectivity's standard Conditions of Sale for this product and in no case will TE Connectivity be liable for any other incidental, indirect or consequential damages arising from the use or misuse of the products.
Raychem, TE, TE Connectivity and TE connectivity (logo) are trademarks.
© 2020 TE Connectivity. All Rights Reserved.

Cable Preparation

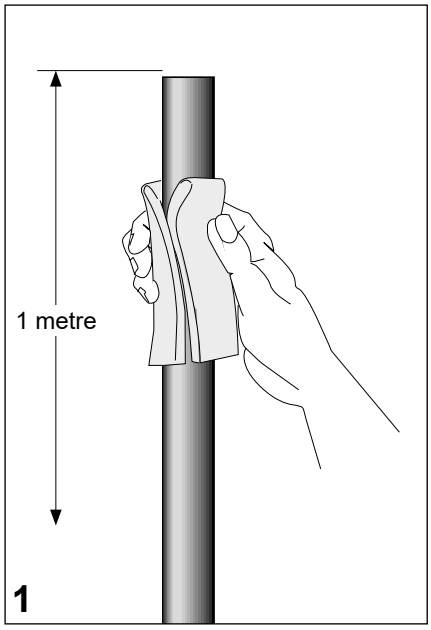

Clean and degrease the end of the oversheath for a length of 1 metre with solvent wipe.

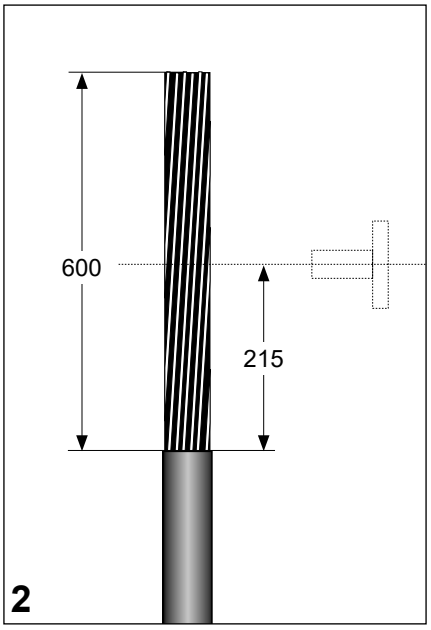

Cable with wire shield
Position the cable with sufficient overlap to the bushing centre.
Mark the oversheath 215 mm below the bushing centre.
Cut the cable 600 mm above the mark and remove the oversheath over this distance. Cut off Cu-spiral screening tape flush with end of outer sheath.
Edges projecting beyond the outer sheath **must be avoided**, so that the stress cone can not be damaged during push on procedure.

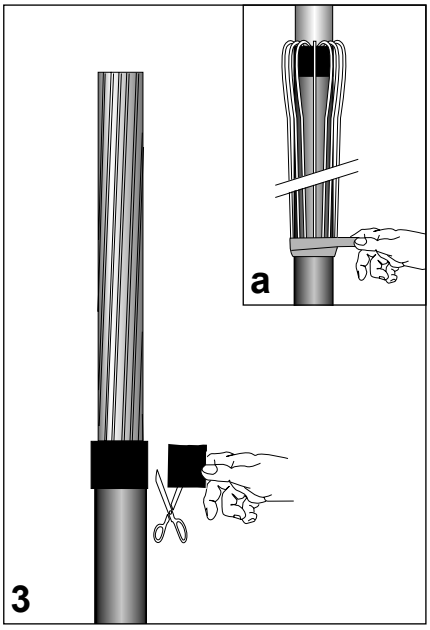

Wrap one turn of sealant tape (grey) with no overlap and slight tension around the end of the oversheath.

Cut the tape and push ends together.

Bend the shielding wires back onto the oversheath.

Avoid crossing the individual wires. Temporarily secure the wires with a tape or wire binder.

Cut the core according to the dimension given in the drawing. Remove the core screen with appropriate screen cutting tool according to the drawing. The surface of the insulation should be free from all traces of conductive material. Compare the diameter over insulation with application range as shown in **Table 1** as well as with marking of supplied stress cone.

Application Check!

Cut back the insulation according to dimension **K** given in drawing details.
A. Hexagonal and deep indent compression lugs
Dimension **K** must not exceed 67 mm.
B. Mechanical lugs
Dimension **K** is identical to depth of bore. Barrel butts against insulation!

NOTE

For easy installation of the stress cone, chamfer the edge of insulation as shown.

RSTI-5851 ≥ 50-70 mm²

RSTI-5854 ≥ 240 mm²

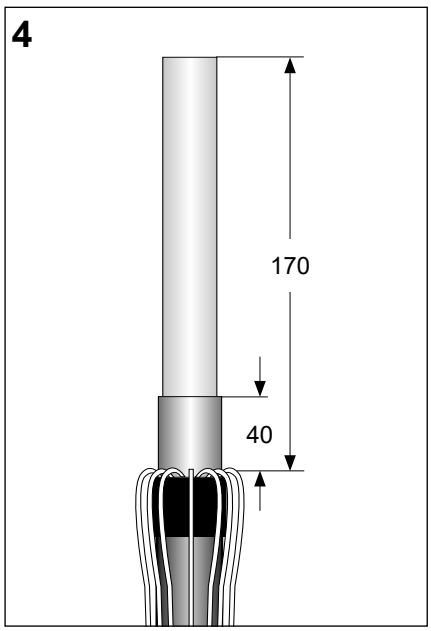

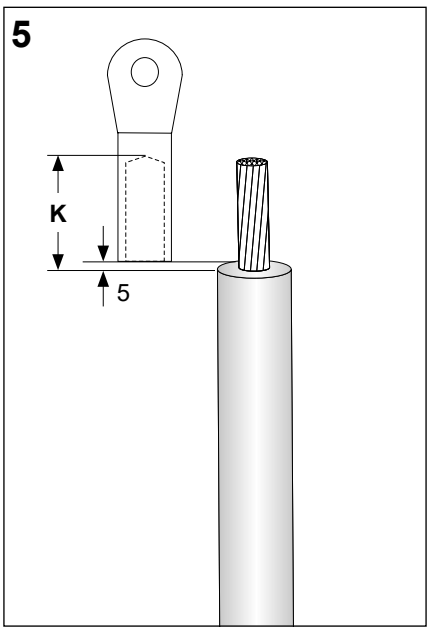

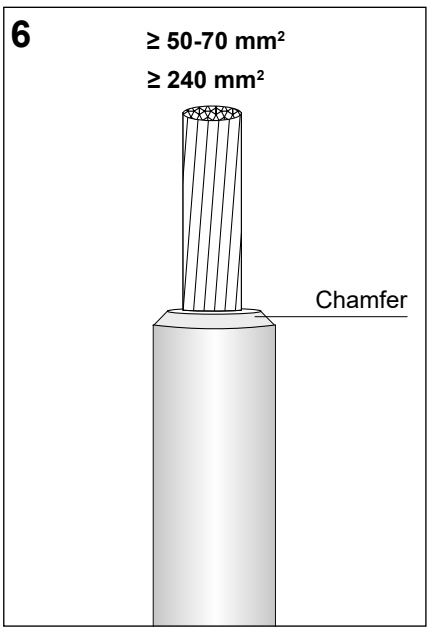

Core Preparation

Table 2 - Use of Insert

Lug Type / Cross Section (Stranded mm² (RM))	BLMC-25/95-16-800A	BLMC-95/240-16-800A	BLMC-185/300-16-800A
35	YES		-
50	YES		-
70	NO		-
95	NO	YES	-
120	-	YES	-
150	-	YES	-
185	-	NO	YES
240	-	NO	YES
300	-	-	NO

A. Compression lugs

Install the cable lug with the appropriate die and compression tool.

NOTE

Remove any sharp edges.

Clean and degrease the lug and insulation from any excessive compression grease.

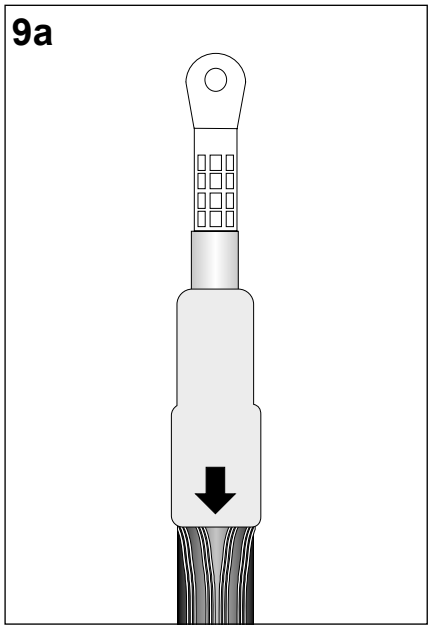

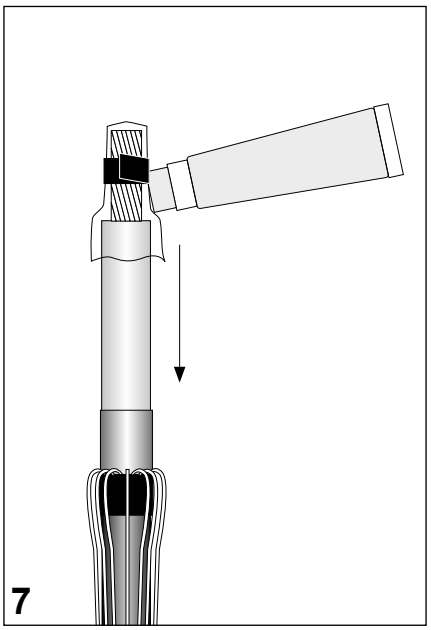

Slide the small protective bag (assembly aid) over the exposed conductor and tie it down with a PVC tape as shown in the drawing.

Gently lubricate the outer surface of the protective bag and the core insulation with a thin layer of assembly lubricant Apply the lubricant layer with the sponge top as shown.

B. Mechanical lugs with inserts

The insert has to be used as noted in **Table 2**.

Ensure that the retention of the insert is locked into the appropriate slot in the barrel.

Install the cable lug using a lug fixture. Tighten the bolt set alternately in several equal steps until the heads shear off.

Remove any sharp edges.

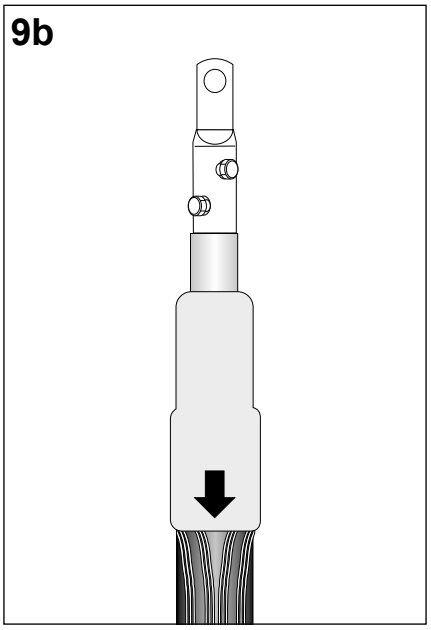

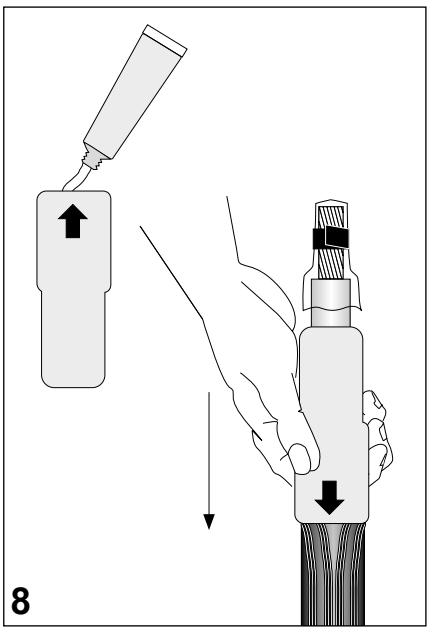

Apply onto the inner surface of the stress cone at the bottom end a 3 cm long sausage of assembly lubricant and spread it evenly over the inner surface. Use assembly lubricant without sponge top. Push the stress cone in one sequence with a twisting movement over the assembly aid completely onto the insulation until the inner collar of the stress cone stops at the oversheath cut back of the cable.

NOTE

The arrow on the stress cone should point onto the cable sheath.
Remove the assembly aid from the conductor.

Apply a thin layer of lubricant onto the outer surface of the stress cone with the sponge top.

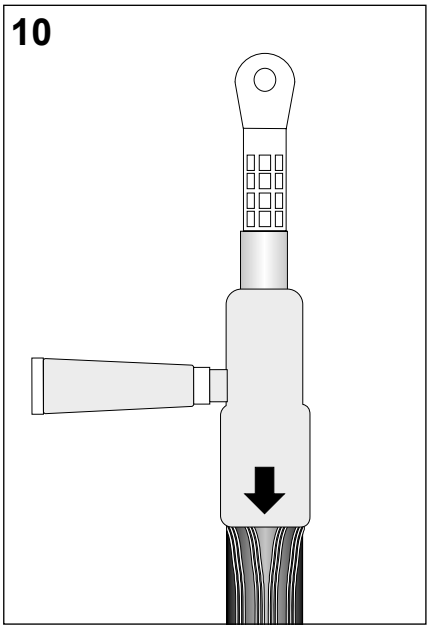

Installation of Connector Body

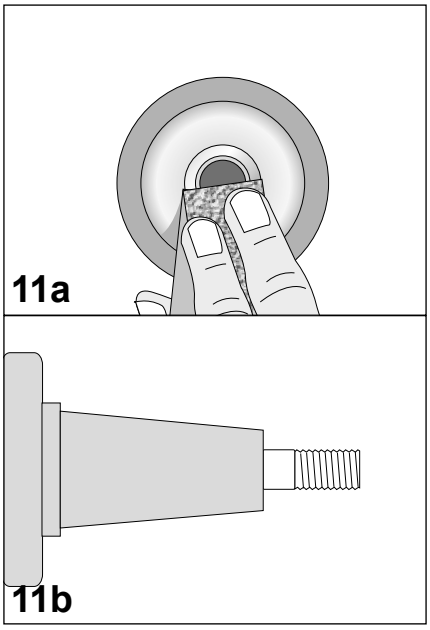

a. Abrade and clean the contact ring of the bushing thread from residuals such as resin or varnish if any.

b. Insert the threaded stud into the bushing and tighten it up with an Allen key (8 mm). Maximum torque: **35 Nm**.

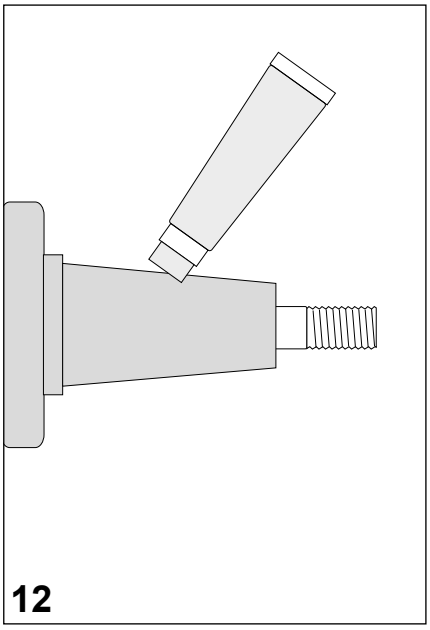

Clean the conical surface of the bushing and lubricate it with the assembly lubricant as shown.

Clean and degrease the bottom and front end of the screened connector body and apply a thin layer of lubricant onto the inner surface without the sponge top as shown.

NOTE

Use one way glove to evenly lubricate the inner surface at a length of approximately 50 mm.

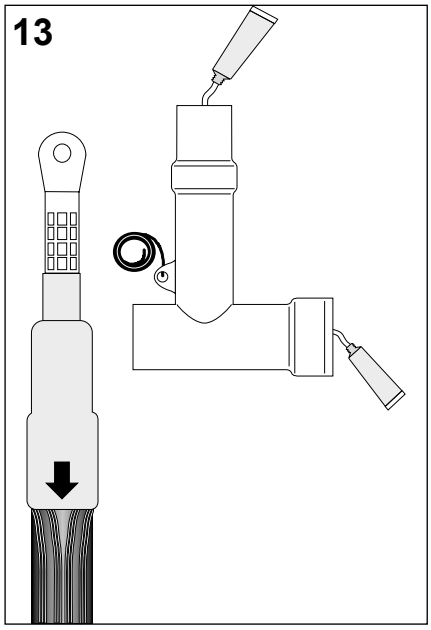

Push screened connector body with no interruption onto the stress cone and hold it. Continue **immediately** with the next step.

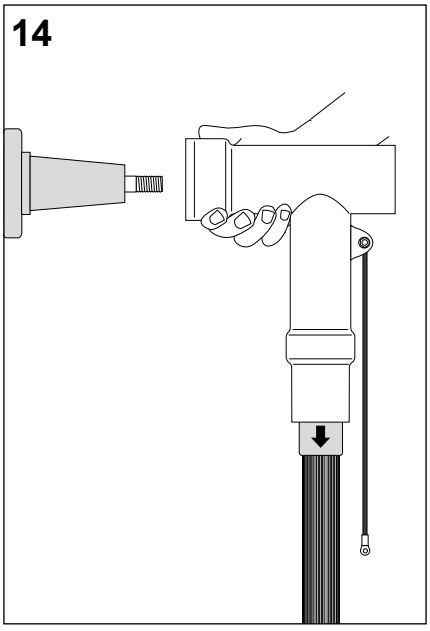

Align the eye of the cable lug with the threaded pin and push the screened connector onto the bushing.

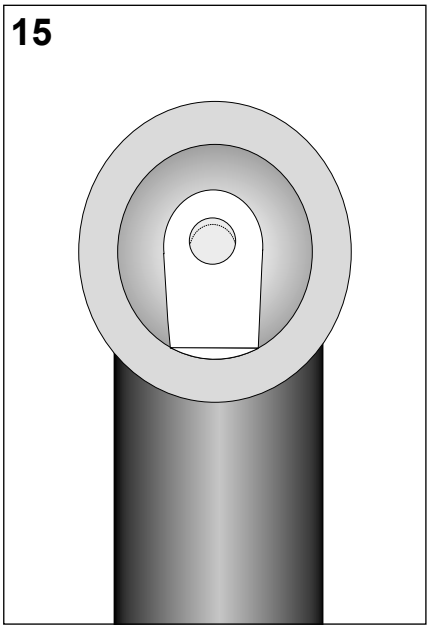

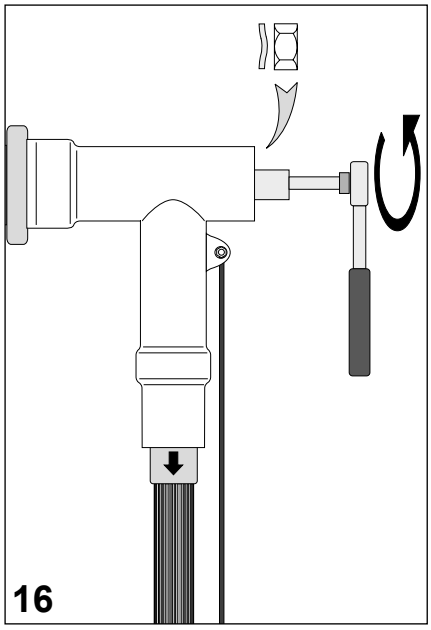

Insert the spring washer and hex nut. Tighten the hex nut onto the stud with a spanner (24 mm) at a torque of **30 Nm**.

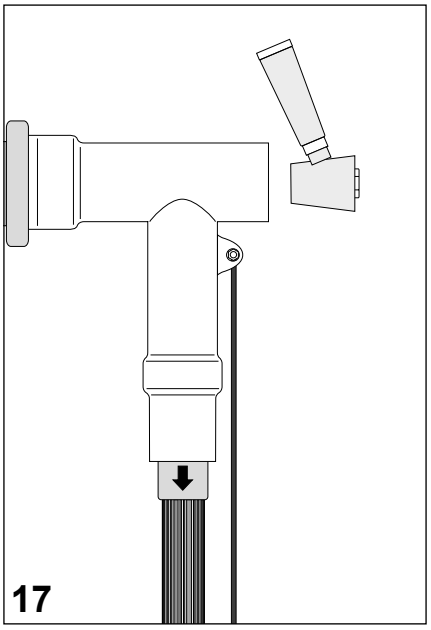

Clean the inner surface of connector back end and apply a thin layer of assembly lubricant. Do the same with the conical interface of the back plug as shown.

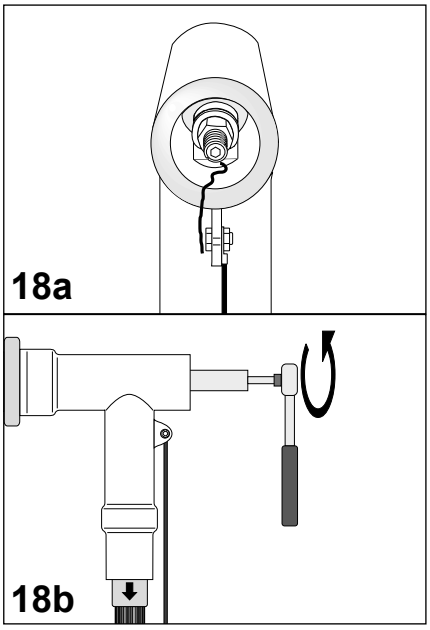

a. Place a string into the rear entry of the connector as shown.

b. Insert the back plug and screw it into place using a spanner (19 mm) at a torque of **30 Nm**.

Remove the string prior to the last two turns.

a. Flip-back the endcap as shown in **detail a**. Position the protruding ring onto test point.

b. Flip the endcap into final position with your finger as shown in **detail b**.

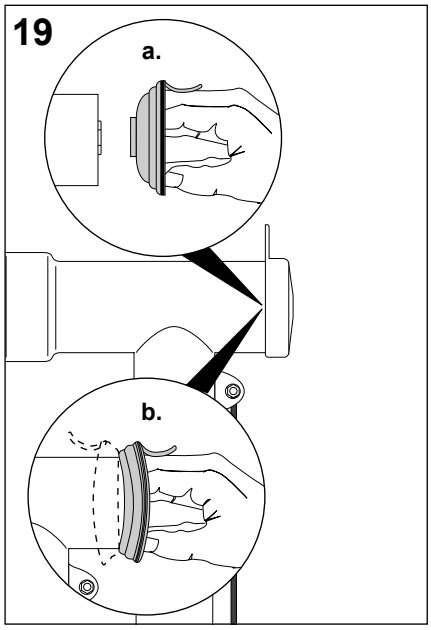

Ensure that the grounding lead is fastened tightly.

Fix the shielding wires with a wire binder (four layers) at the end of the stress cone. Gather the wires together to form an earth lead. Install at the end of the shielding wires the connection lugs supplied in the kit.

Perform connection to ground.

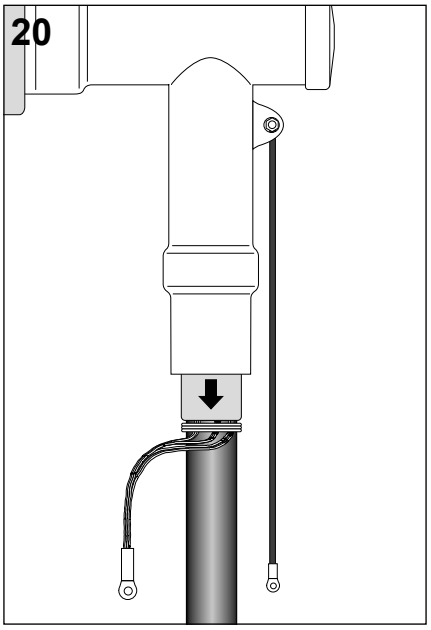

Screened separable connector completed.

Please dispose of all waste according to environmental regulations.

