TE´s Raychem Cable Accessories

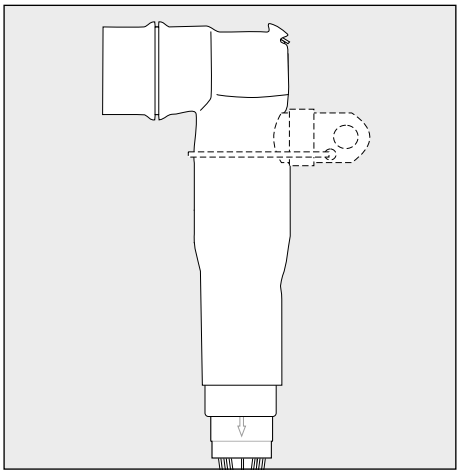

Installation Instructions EPP-2992-7/18

Screened Elbow Separable Connectors 250 A for Bushing Profile Type A in Accordance with EN 50181 and Single Core Polymeric Insulated Cable with Wire Screen up to 24 kV

Type: RSES-(VD)-525x-(E)

Safety Warning:

It is essential to observe the applicable safety regulations for working with high voltage equipment.
For precise safety information please contact the responsible authority.

To view the TE Energy website:

Tyco Electronics Raychem GmbH
a TE Connectivity Ltd. Company
Finsinger Feld 1
85521 Ottobrunn/Munich, Germany
Tel: +49-89-6089-0
Fax: +49-89-6096-345
TE.com/energy

Before Starting

Check to ensure that the kit you are going to use fits the cable.

Refer to the kit label and the title of the installation instructions.

Components or working steps may have been modified since you last installed this product.

Carefully read and follow the steps in the installation instructions.

Kit Content

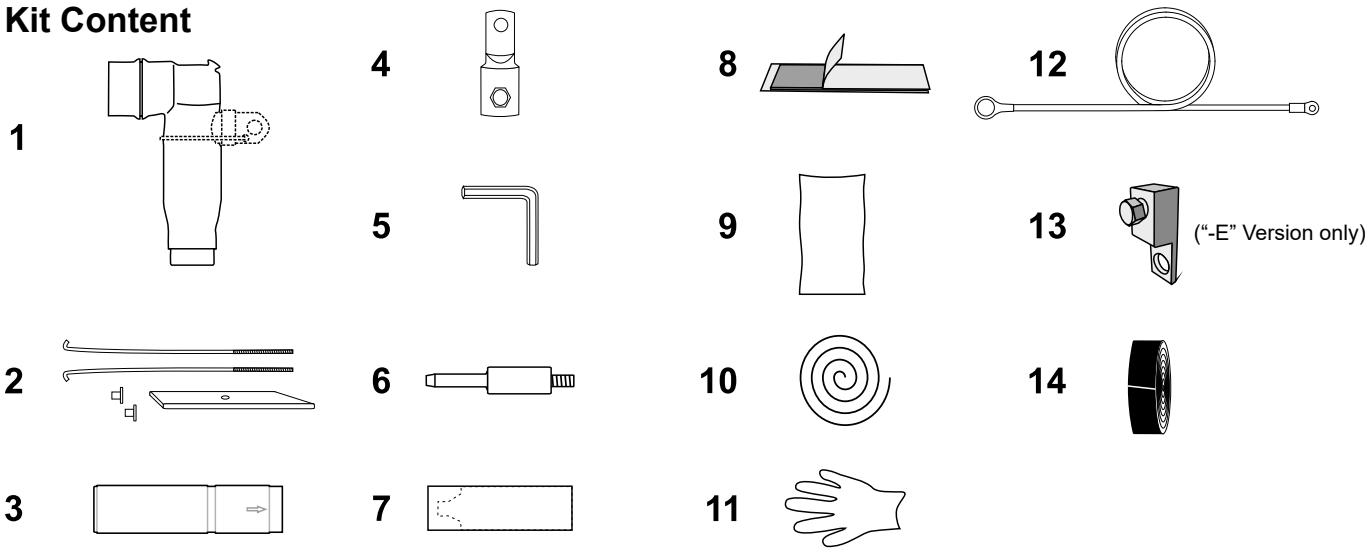

1	3 x Connector body	**4**	3 x Main cable lug	**8**	3 x Sealing mastic	**12**	3 x Earth lead
2	6 x Threaded hooks, 6 x Knurled nut, 3 x Back plate	**5**	Allen key	**9**	3 x Assembly aid	**13**	3 x Screen lug ("-E" Version only)
		6	3 x Contact pin	**10**	1 x Binding wire		
3	3 x Stress cone	**7**	9 x Assembly paste	**11**	3 x Gloves	**14**	1 x PVC Tape

Table 1

Type	Conductor cross-section [mm²] at cable rated voltage *			Ø Conductor [mm]				Ø Core insulation [mm]
	12 kV	17,5 kV	24 kV	Al class 1	Al class 2	Cu class 1	Cu class 2	
RSES-(VD)-525A	16 - 70	16 - 50	16	4,1 - 11,0	5,6 - 12,5	3,5 - 11,0	4,6 - 12,5	12,7 - 19,2
RSES-(VD)-525B	95	50 - 95	25 - 95	4,1 - 11,0	5,6 - 12,5	3,5 - 11,0	4,6 - 12,5	17,9 - 25,0
RSES-(VD)-525C	95 - 150	70 - 120	70 - 95	8,7 - 13,8	9,3 - 15,0	8,7 - 13,8	9,3 - 15,0	17,9 - 25,0
RSES-(VD)-525D	-	120 - 150	70 - 150	8,7 - 13,8	9,3 - 15,0	8,7 - 13,8	9,3 - 15,0	21,9 - 28,5

* Applicable for conductors acc. to IEC 60228 class 2 Cu compacted

! Work with **clean hands.**



! We recommend installing the connector in a **clean environment.**



The Information contained in these installation instructions is for use only by installers trained to make electrical power installations and is intended to describe the correct method of installation for this product. However, TE Connectivity has no control over the field conditions which influence product installation.
It is the user's responsibility to determine the suitability of the installation method in the user's field conditions.
TE Connectivity's only obligations are those in TE Connectivity's standard Conditions of Sale for this product and in no case will TE Connectivity be liable for any other incidental, indirect or consequential damages arising from the use or misuse of the products.
Raychem, TE, TE Connectivity and TE connectivity (logo) are trademarks.
© 2019 TE Connectivity. All Rights Reserved.

Cable Preparation

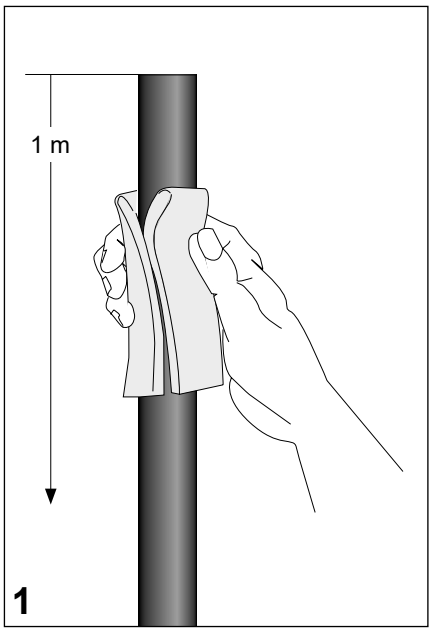

Clean and degrease the end of the oversheath for a length of 1 metre.

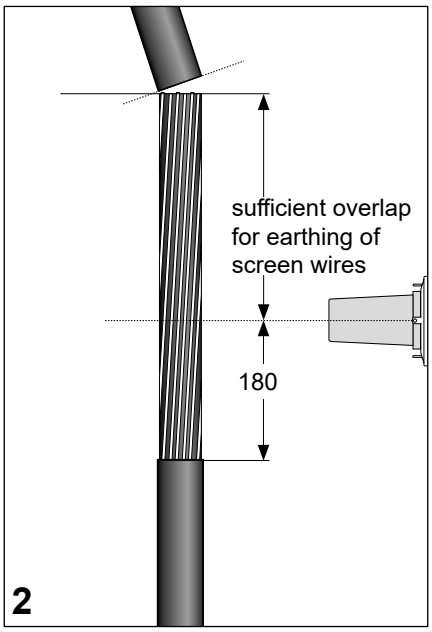

Position the cable with sufficient overlap to the bushing centre line to provide suffcient length for earthing of screen wires and cut the cable accordingly.

Mark the cable 180 mm below the center of the bushing centre line.

Remove the oversheath up to this mark.

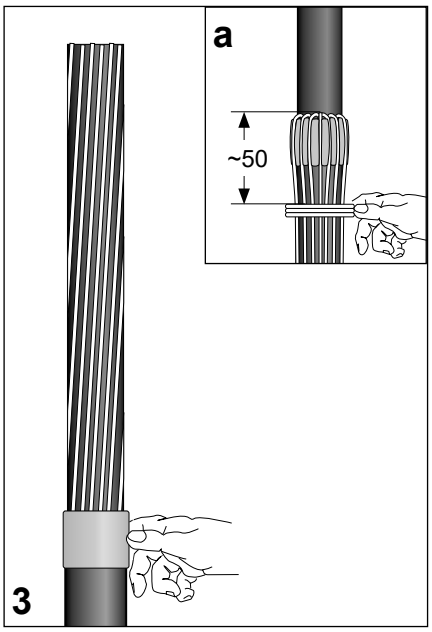

Wrap 1 layer of sealing mastic with slight tension and no overlap around the end of the oversheath.

Cut the tape and push ends together.

Bend the screen wires back onto the oversheath. Avoid crossing of individual screen wires.

Fix them with 3 layers of binding wire 50 mm below the oversheath cut (a).

Cut off the core according to the dimensions as shown in the drawing.

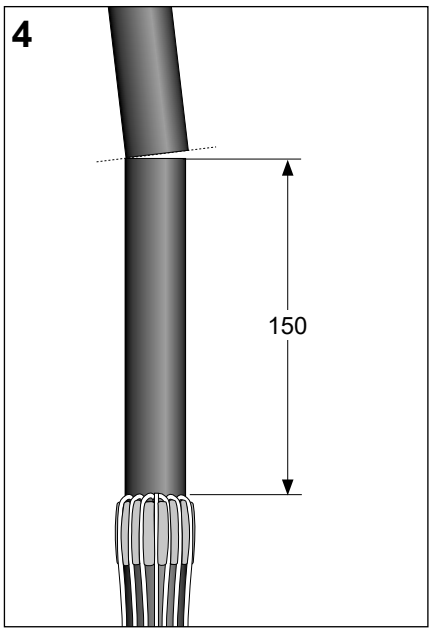

I. Cable with Bonded Core Screen

Remove carefully the core screen with an appropriate stripping tool until 40 mm above the oversheath cut.

Warning

Do not nick the insulation.
The surface of the insulation must be even and free of all traces of conductive material.

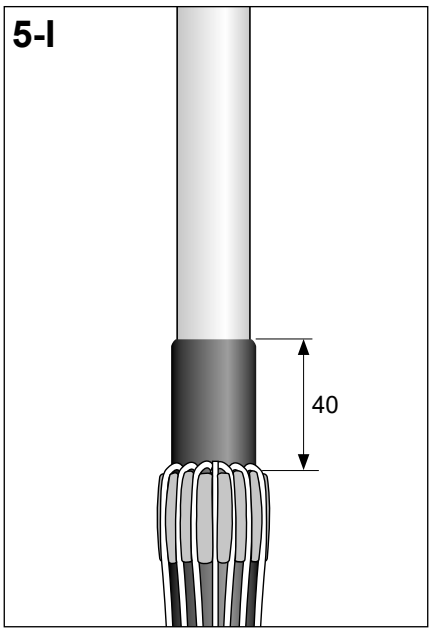

II. Cable with Easy Strip Core Screen

Wrap a few layers of PVC tape over the core screen at dimension given in the drawing. Use round file to take away core screen at the edge of the marker tape until the white colour of the insulation becomes visible. Use the depth limiting cutter to cut the core screen and thoroughly remove the screen. Afterwards remove the PVC tape.

Warning

Do not nick the core screen or insulation.

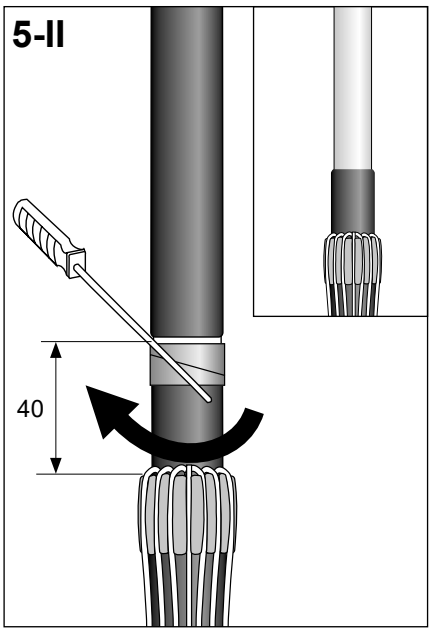

Core Preparation

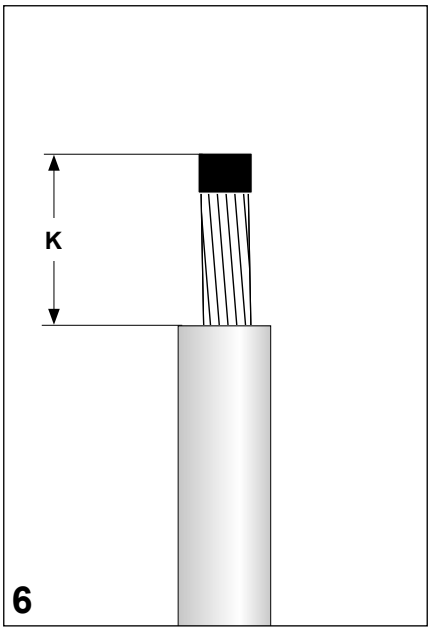

Cut back insulation according to the dimension **K** given in **Table 2**.

Protect the end of the conductor with PVC tape.

Remove sharp edges from the end of the insulating layer.

Table 2	
Kit	**K mm**
RSES-(VD)-525A	25
RSES-(VD)-525B	25
RSES-(VD)-525C	35
RSES-(VD)-525D	35

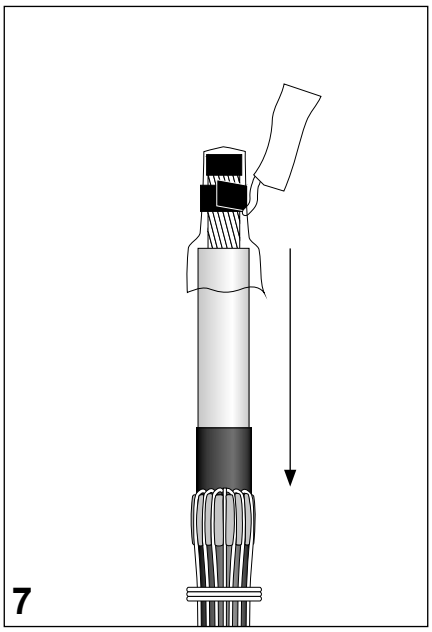

Clean the insulation and core screen.

Slide the small protective bag (assembly aid) over the conductor and tie it down with PVC tape as shown in the drawing.

Put on a disposable glove and gently lubricate the outer surface of the protective bag and the core insulation with a thick layer of assembly paste (approx. ½ packet).

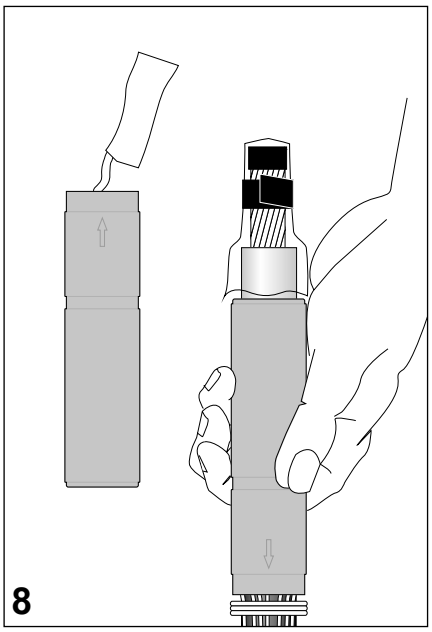

Apply the remaining 50 % of the assembly paste packet onto the inner surface of the stress cone.

Push the stress cone in one sequence with a twisting movement over the assembly aid completely onto the insulation until the inner collar of the stress cone stops at the oversheath cut.

Note

The arrow on the stress cone should point onto the cable sheath.

Remove the assembly aid and PVC tape from the conductor.

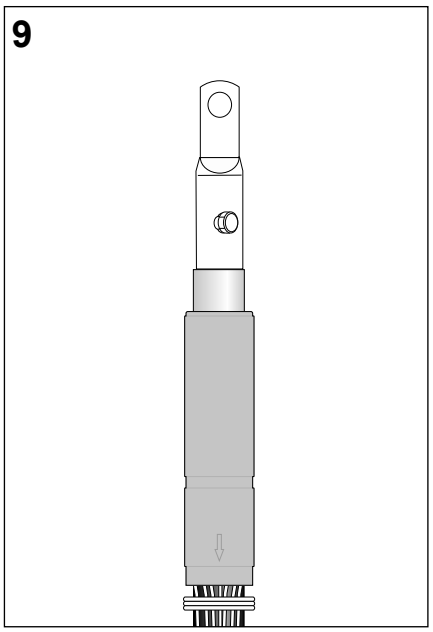

For mechanical lugs with inserts:

The insert inside the mechanical cable lug shall only be used for small cable cross sections as indicated in Table 3.

Align the bore in the lug to face in the direction of the bushing. **Use a lug fixture** to tighten the bolt until the head shears off.

Remove any sharp edges and metal residues.

Table 3 – Use of inserts

Kit / Cross Section mm²	RSES-(VD)-525A RSES-(VD)-525B	RSES-(VD)-525C RSES-(VD)-525D
16	YES	-
25	YES	-
35	YES	-
50	YES	-
70	NO	YES
95	NO	YES
120	-	NO
150	-	NO

Attention: If insert is used, ensure that the retention of the insert is locked into the appropriate hole in the barrel.

Mounting of Connector Body

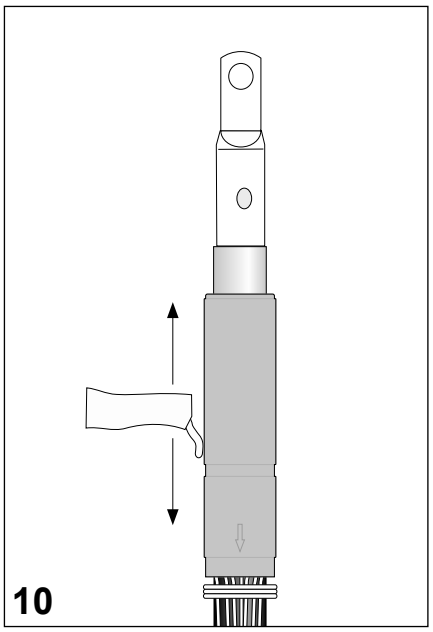

Ensure a clean surface of the stress cone, clean if necessary.

Put on a disposable glove and apply a thin layer of assembly paste onto the outer surface of the stress cone (approx. ½ packet) and spread it evenly on the surface.

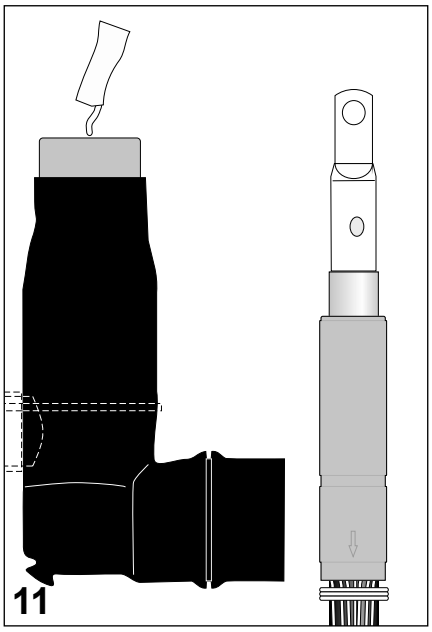

Apply the remaining 50 % of the assembly paste packet onto the inner surface.

Note:
The assembly paste must evenly distributed over at least 50 mm of the entire inner surface.

a. Push the connector body without interruption onto the stress cone and hold it in place.
Insert the Allen key into the hex socket of the contact pin.
Apply a thin layer of assembly paste to the wide section of the pin.

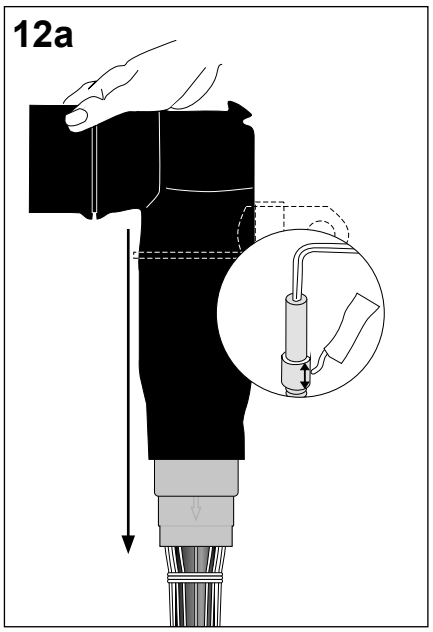

b. Check alignment of the cable lug hole and the elbow body before installing the contact pin.

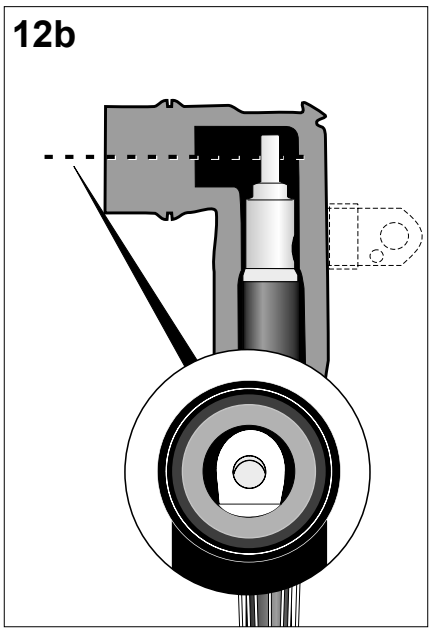

c. Insert the contact pin into the lug and fasten it with the Allen key until the Allen key slightly starts to deform (approx. 7 Nm).

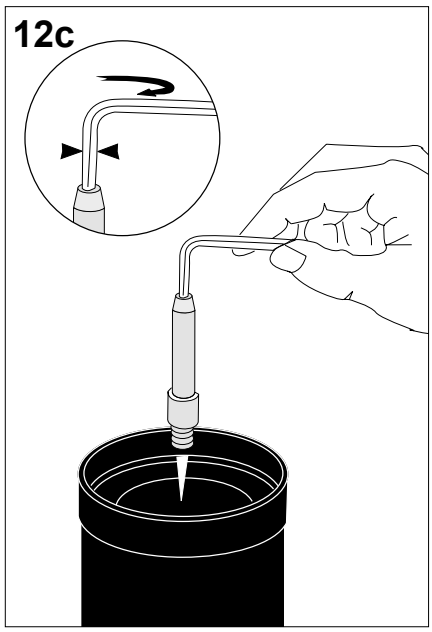

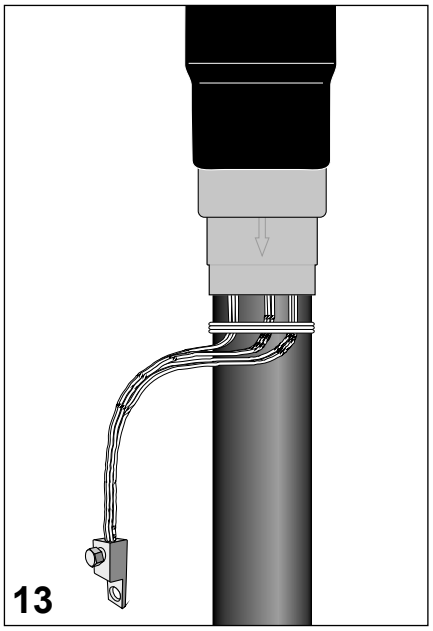

Gather the screen wires together to form an earth lead and cut to same length. Install the screen lug at the end of the screen wires.

Tighten the bolt until the head shears off.

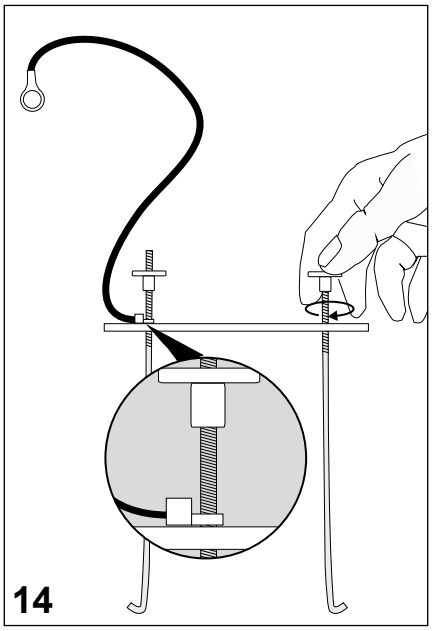

Preparing the bail restraint:

Feed the threaded hooks through the holes of the back plate.

Install the earth lead (flat part towards the bail plate) on one of the hooks.

Screw both nuts on the end of hooks.

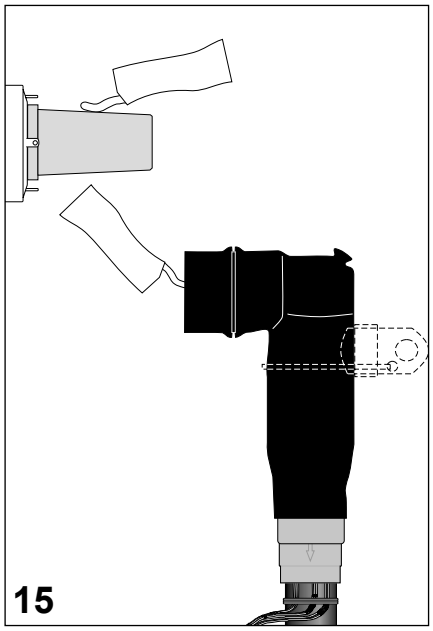

Clean the conical surface of the bushing and the inner surface of the connector.

Lubricate both with the assembly paste using a disposable glove (½ packet each).

Align the front of the connector body with bushing centre and push the connector onto the bushing.

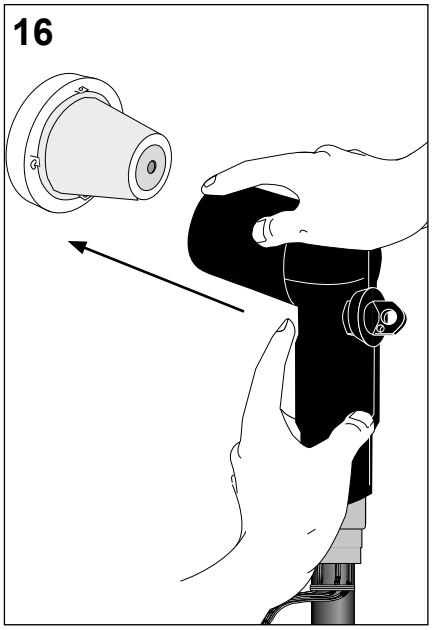

Install the bail restraint centrally behind the connector. Tighten the knurled nuts evenly on both sides and firmly by hand.

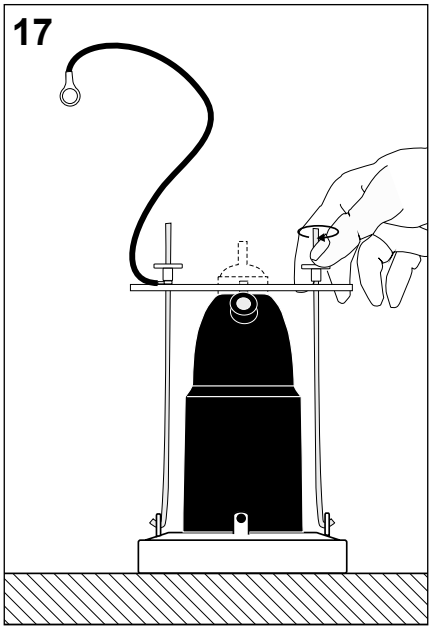

Fix cable according to local requirements.

Perform connection to ground.

Screened separable connector installation is now completed.

Please dispose of all waste according to environmental regulations.

