Installation Instructions

Instrucciones de instalación, Instructions d'installation, Installationsanleitung, إرشادات التركيب ,
Installatie-instructies, Instruções de instalação, Installatie-instructies,
設置手順説明, Οδηγίες εγκατάστασης

Product Code:[APRT_/P3/1/]

IP 20 AL

RoHS compliant

1

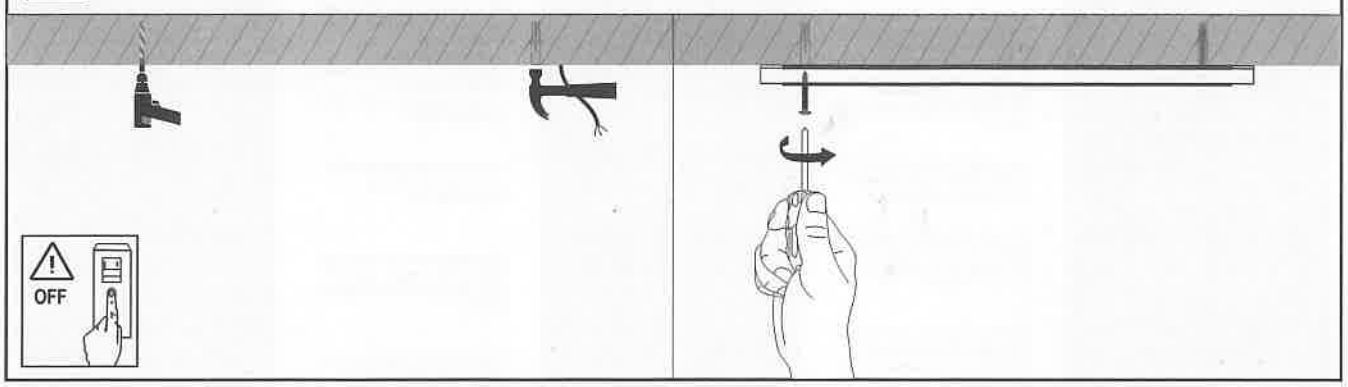

2

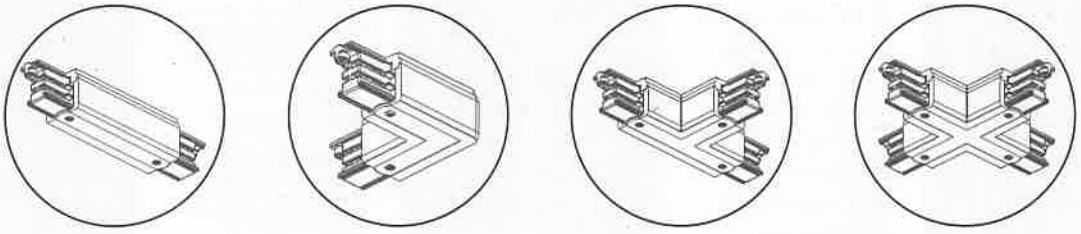

Straight "–" Corner "L" "T" shape Cross "+"

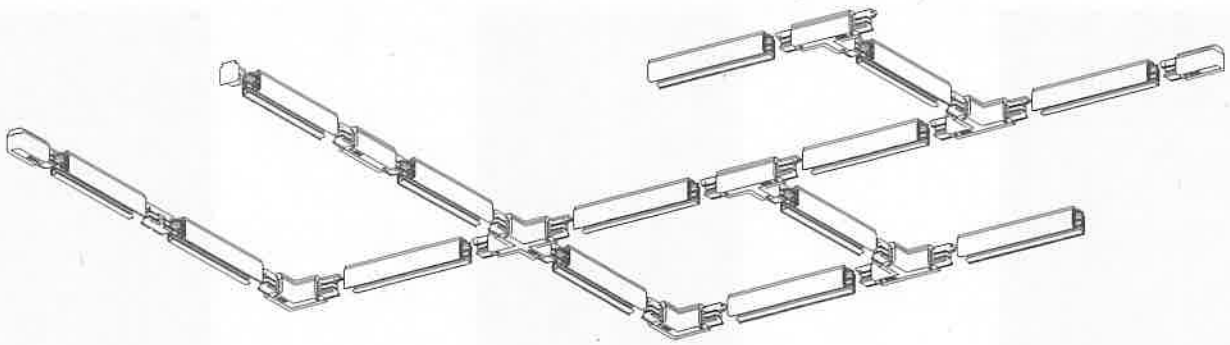

Note: Do not install in the place near heat source, or in corrosive gas environment.

Ansell Electrical Products
Unit 6B, Stonecross Industrial Park,
Yew Tree Way,
Warrington,
WA3 3JD
Warrington Tel: +44 (0)1942 433333

Ansell (Sales & Distribution)
Unit 2, M2 Business Park,
Duncrue Street,
Belfast,
BT3 9AQ
Belfast Tel: +44 (0)2890 773750

Ansell (Sales & Distribution) Republic of Ireland Limited
Unit G1, Block G,
Calmount Park, Calmount Avenue
Dublin 12,
D12 TH56
International Tel: +44 (0)1942 433343

www.anselluk.com

Spain Tel: 00 34 938 005642

Issue Number: [1]

4-wires, 3-circuit

A



N-conductor I = max. 16A

1-phase, 3-circuit, 230V AC, 16A, 3.7kVA

B



L1=L2=L3 : I = max. 16A

3-phase, 3-circuit, 230/400V AC, 16A, 3x3.7kVA

C

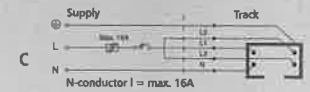

N-conductor I = max. 16A

3-phase, 3-circuit, 230/400V AC, 16A, 11.1kVA

4-wires, 3-circuit

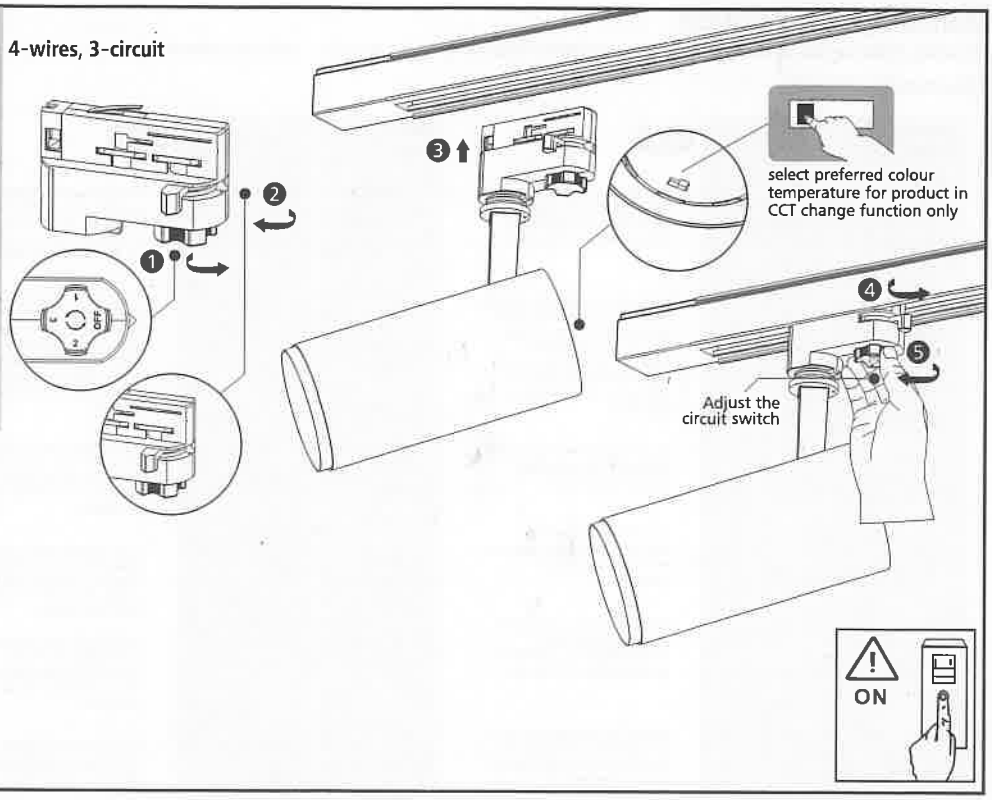

6-wires, 3-circuit (DALI)

A

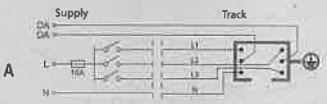

1-phase, 3-circuit, 230V AC, 16A max

B



3-phase, 3-circuit, 230V AC, 16A max

C

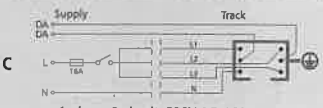

1-phase, 3-circuit, 230V AC, 16A max

6-wires, 3-circuit (DALI)

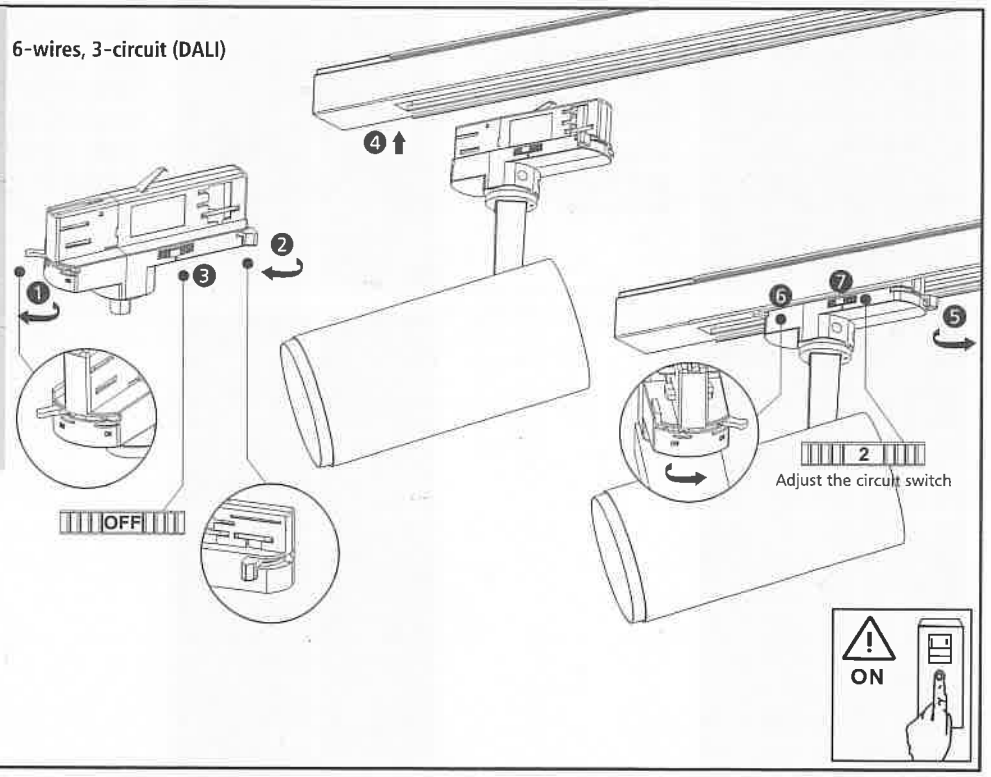

Ansell Electrical Products
Unit 6B, Stonecross Industrial Park,
Yew Tree Way,
Warrington,
WA3 3JD

Ansell (Sales & Distribution)
Unit 2, M2 Business Park,
Duncrue Street,
Belfast,
BT3 9AQ

Ansell (Sales & Distribution) Republic of Ireland Limited
Unit G1, Block G,
Calmount Park, Calmount Avenue
Dublin 12,
D12 TH56

www.anselluk.com

Warrington Tel: +44 (0)1942 433333
Belfast Tel: +44 (0)2890 773750
International Tel: +44 (0)1942 433343
Spain Tel: 00 34 938 005642