

Technical Catalogue PNOZmulti
Version 2021-10

PILZ
THE SPIRIT OF SAFETY

- Configurable, safe small controllers PNOZmulti Classic
- Configurable, safe compact controllers PNOZmulti Mini
- Configurable, safe small controllers PNOZmulti 2



Contents

Introduction	
Basics	
System description	5
Installation	18
System expansion	30
Selection guide	
Configurable safety systems PNOZmulti	64
Configurable compact controllers PNOZmulti Mini	69
Configurable control systems PNOZmulti 2	72
PNOZmulti products	
Base units	79
Input modules	166
Analogue input module	183
Output modules	193
Link modules	259
Speed monitors	284
Fieldbus modules	396
PNOZmulti Mini products	
Base units	509
Link modules	577
Communication modules	601
Fieldbus modules	617
PNOZmulti 2 products	
Base units	678
Input module	744
Analogue input module	752
Input and output modules	773
Output modules	829
Motion monitoring modules	838
Link modules	949
Communication modules	971
Fieldbus modules	984
Software tool	
PNOZmulti Configurator	1077
Accessories	
Software, chip card, USB memory	1084

Contents

Cable, adapter	1086
Connectors, terminals	1091

Many functions, one solution – the configurable systems PNOZmulti bridge the gap between classic safety relays and programmable control systems. The configurable systems PNOZmulti are convincing, with numerous benefits. The software tool PNOZmulti Configurator, for example, impresses with its simple handling: install, open, work intuitively. You also have the widest range of diagnostic options – for high plant availability and low downtimes. The variety of fieldbus and communication options is a huge benefit with PNOZmulti. It means the system can be used independently from the higher level operational control system. Various expansion modules offer maximum flexibility of application.

This technical catalogue describes the structure of the three configurable systems PNOZmulti:

- **Configurable safety systems PNOZmulti**
- **Configurable small control systems PNOZmulti Mini**
- **Configurable control systems PNOZmulti 2.**

The units in the PNOZmulti systems are described in a detailed data sheet, which will help you with module selection and enable project configuration.
Please refer to the units' operating manual for information on installation and operation.

Further information on the systems can be found in the following documents:

- Installation Manual PNOZmulti
- Safety manual PNOZmulti
- Communications interfaces PNOZmulti/PNOZmulti 2
- Special Applications PNOZmulti

System description

System description

Contents	Page
Overview	7
Hardware	10
Software	14
Diagnostics	15

System description
Overview

Configurable small controllers PNOZmulti

The configurable small controllers PNOZmulti are suitable for implementing multiple safety functions on a plant or machine. Thanks to its modular structure, PNOZmulti can be adapted to the size of the plant and machinery. With a large number of the most diverse modules and a variety of base units, you can design your application with the utmost flexibility. 3 different PNOZmulti systems are available, depending on your requirement.

- **Configurable safety systems PNOZmulti**

  The configurable safety systems PNOZmulti are the classic units among the configurable systems. They are suitable for use from four safety functions upwards. The systems are characterised by a comprehensive range of module and communication options.

- **Configurable compact controllers PNOZmulti Mini**

  The configurable small control systems PNOZmulti Mini are mainly used from three safety functions upwards. The small control systems have a lower number of expansion modules than PNOZmulti and PNOZmulti 2.

- **Configurable control systems PNOZmulti 2**

  The configurable control systems PNOZmulti 2 are suitable for use from four safety functions upwards. They accommodate the full function range of the "classic" PNOZmulti base units on 45 mm width. The base units have an illuminated display - for even faster diagnostics.

Modular structure

- The configurable small controllers PNOZmulti consist of a base unit and various expansion modules. The type of base unit determines which expansion modules may be connected (see section entitled System expansion [📖 30]).
  The devices of the three systems ***Configurable safety systems PNOZmulti***, ***configurable compact controllers PNOZmulti Mini*** and ***configurable control systems PNOZmulti 2*** may not be combined.
- The base unit (exception: PNOZ m B1) has various inputs and outputs and is also fully functional without expansion modules.
- The expansion modules supplement the base unit with additional inputs or outputs.

Configuration in the PNOZmulti Configurator

- The system's function is defined via the PNOZmulti Configurator.
- The PNOZmulti Configurator is a graphic tool which is used to define the functions of the units. Various safety functions are available, such as emergency stop, two-hand monitoring, safety gate monitoring and drive monitoring. With the correct circuitry it is possible to achieve categories up to PL e of EN ISO 13849-1 and SIL CL 3 of EN IEC 62061.
- Using predefined symbols, a simple circuit diagram shows how the units' inputs and outputs should be connected. This circuit diagram is then downloaded to the base unit.

System description
Overview

- The system can be expanded or the functions modified at any time.
- Frequently used parts of the circuit diagram can be combined into macro elements, stored in the macro library and reused.

Inputs

- The small controllers PNOZmulti have semiconductor inputs for safety-related and standard applications.
- The inputs for standard applications can also be set via the integrated interface or via fieldbus modules (e.g. PROFIBUS-DP, CANopen, ...).
- Decentralised input modules provide safe inputs for use up to IP67 (e.g. PDP67 F DI ION).
- Analogue input modules can be connected to the base units of the configurable safety system PNOZmulti, thereby providing safe analogue inputs. The input signals are converted into digital signals.
  For standard applications, the exact analogue values are made available to the base unit to forward to a fieldbus.

Outputs

- The small controllers PNOZmulti have various outputs.
  - Relay safety outputs
  - Semiconductor safety outputs
  - Semiconductor outputs for standard applications
- The safety outputs use semiconductor technology, require no maintenance and are non-wearing; they are therefore suitable for applications with frequent operations or cyclical functions. They can be used for 24 VDC applications.
- Safe semiconductor outputs with advanced fault detection can also be configured for the base units PNOZmulti Mini. These single-channel semiconductor outputs can be used to achieve a higher level of safety.
- The relay safety outputs are suitable for less frequent operations, but they have a higher breaking capacity and can be used for AC applications.
- The outputs for standard applications can also be evaluated via the integrated interface or via fieldbus modules (e.g. PROFIBUS-DP, CANopen, ...).

System description
Overview

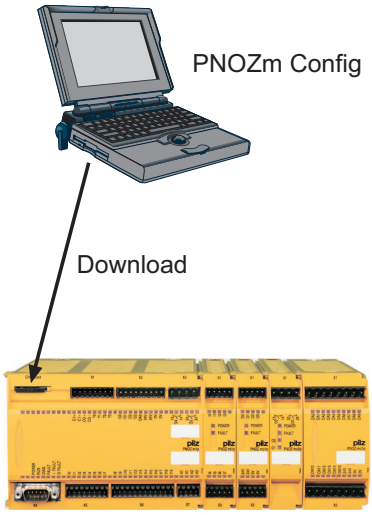

System description
Hardware

Structure of the configurable control system

The configurable control system consists of the base unit and expansion modules. Depending on the unit type, a base unit will have:

- Inputs
- Relay outputs
- Safe semiconductor outputs
- Outputs for standard applications
- Cascading input
- Cascading output

The number of inputs and outputs can be increased at any time using the expansion modules. The modules are linked via a jumper. The system is configured using the PNOZmulti Configurator. Special expansion modules enable data to be exchanged via a fieldbus (non-safety-related) or safe speed monitoring, for example.

System description
Hardware

Operation of the units

The PNOZmulti Configurator generates a project file which is downloaded to the base unit; there it defines

- Which safety functions the inputs are to carry out, e.g. E-STOP monitoring, safety gate monitoring
- How the inputs are connected to the outputs via logic functions
- Which output is configured (semiconductor, relay)

The units react the same, irrespective of these functions:
If the start-up condition of the specific safety function is met, there will be a high signal at the output “Out1”. The output signal can be linked via a logic function and is then present as the “Out2” signal at the output on the PNOZmulti unit.

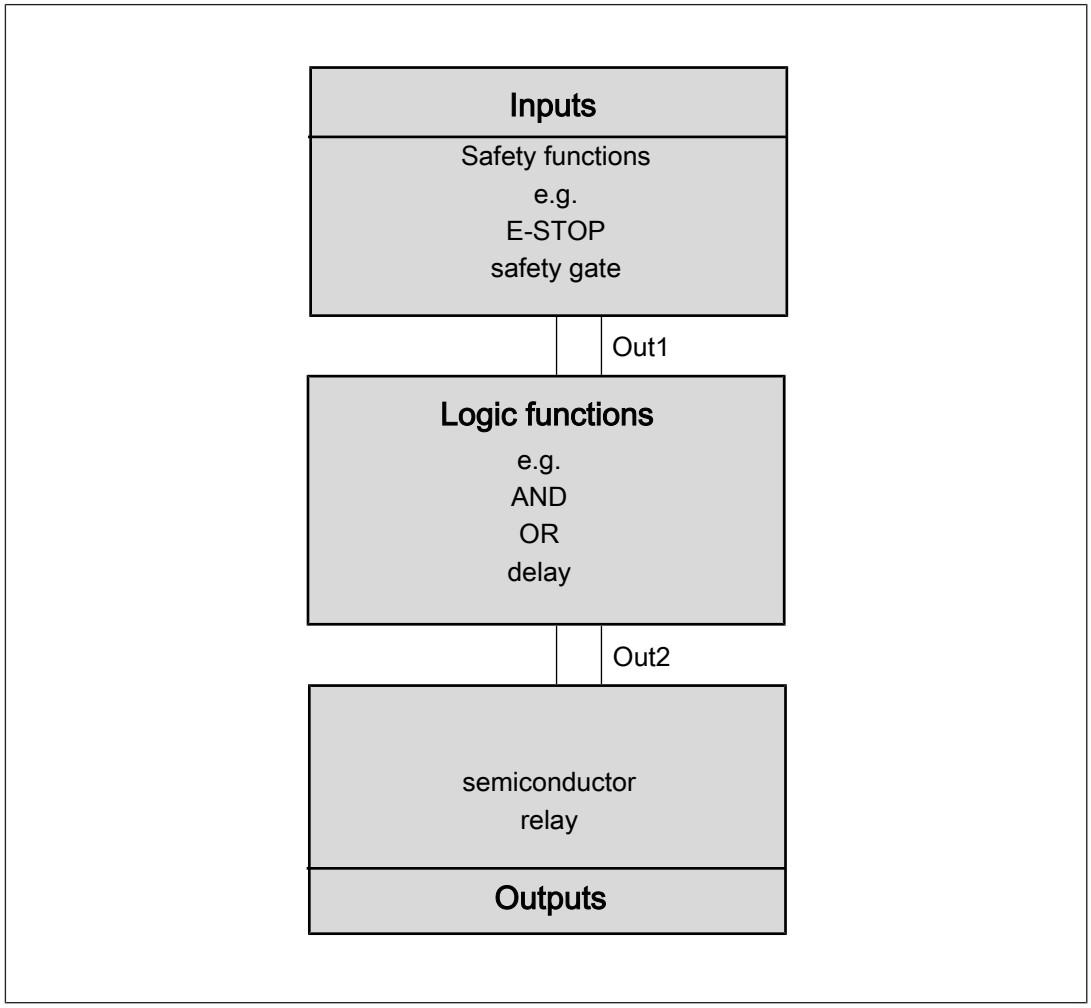

System description
Hardware

Fieldbus modules

The fieldbus modules are used to

- Read the diagnostic data
- Set virtual inputs for standard functions
- Read virtual outputs for standard functions

Interfaces

The base units have an interface to

- Download the project
- Read the diagnostic data
- Set virtual inputs for standard functions
- Read virtual outputs for standard functions
- Read the error stack.

Safety functions

The PNOZmulti systems have inputs and outputs, which can be used for various safety functions, depending on the system. Special base units and modules may be needed to implement safety functions (see selection guide).

Configurable safety systems PNOZmulti

Monitoring of

- E-STOP pushbuttons
- Operating mode selector switches
- Enabling switches
- Two-hand pushbuttons
- Safety gates
- Light curtains
- Light barriers
- Speeds (modules PNOZ ms... see selection guide)
- Standstill
- Muting
- Analogue input signals (analogue input module PNOZ ma1p)
- Pressure sensitive mats
- Mechanical presses (with base unit PNOZ m2p)
- Furnaces (with base unit PNOZ m3p)

System description
Hardware

Configurable small control systems PNOZmulti Mini

Monitoring of

- E-STOP pushbuttons
- Operating mode selector switches
- Enabling switches
- Two-hand pushbuttons
- Safety gates
- Light curtains
- Light barriers
- Muting
- Pressure sensitive mats

Configurable control systems PNOZmulti 2

Monitoring of

- E-STOP pushbuttons
- Operating mode selector switches
- Enabling switches
- Two-hand pushbuttons
- Safety gates
- Light curtains
- Light barriers
- Muting
- Pressure sensitive mats
- Analogue input signals (analogue input module PNOZ EF 4AI)
- Drives (e.g. speed/speed range monitoring, direction of movement monitoring, operating stop monitoring)
- Furnaces (with base unit PNOZ m B1 Burner)
- Operating mode selection and authorisation with PITreader (see System Descriptions PITmode flex and PITmode flex visu)

Various switch types are available for the required safety-related applications. With some switch types it is possible to monitor for simultaneity (see online help for the PNOZmulti Configurator).

System description
Software

The functions of the PNOZmulti system are defined in the PNOZmulti Configurator software.

Procedure

- First, the required hardware is selected in the PNOZmulti Configurator via drag and drop. Each unit is given a resource label.
- When all the units are selected, the circuit diagram is created in the user program. The circuit diagram describes the application for which the safety system is to be used. It is here that you determine which inputs are assigned to which safety-related or standard functions.
- The inputs and/or the results of the safety-related or standard functions can be linked through logic functions. The results of the logic functions or the results of the safety-related or standard functions are channelled to the outputs on the PNOZmulti units.
- The circuit diagram is generated on a graphical interface. Symbols are provided for the safety-related or standard functions, logic functions and the various output types. These are simply dragged on to a workspace, configured and interconnected.
- Frequently used parts of the circuit diagram can be combined into macro elements, stored in the macro library and reused.
- On Multi2 systems, complex modules are configured in a separate sub-program, the Module program (mIQ). The user program then consists of a main program and one or more module programs. Each module is configured in a separate module program.
- Once the circuit diagram is complete, the data must be saved and downloaded to the base unit. The circuit diagram, unit configuration and all the data that has been entered are stored within a project.
- When the project is saved, various passwords can be used to protect it from unauthorised access.
- Once it is saved, the project has to be downloaded to the base unit. To do this, the project data is downloaded on to a chip card. It is either downloaded directly via the communications interface or via a chip card reader.
- After downloading, a test must be performed to check that the safety devices function correctly.
- A project or diagnostic configuration can be created in multiple languages.

System description
Diagnostics

The PNOZmulti has many options for diagnostics and fault detection:

- LEDs on the base unit and expansion modules
- Diagnostic data via the communication interface and via a fieldbus
- Error stack
- Diagnostic word in the PNOZmulti Configurator
- Expanded diagnostic options using a visualisation system, e.g. PASvisu with PMI

Only for base units PNOZmulti Mini and PNOZmulti 2:

- Display messages can be configured in the PNOZmulti Configurator

Detailed information on the diagnostic options are available in the document "PNOZmulti communication interfaces".

LEDs on the base unit and expansion modules

The LEDs signal

- Operating states (e.g. "RUN")
- External and internal errors

The key to the LEDs can be found in the operating instructions supplied with the units.

Communications interface

The integrated communications interface on the configurable control system PNOZmulti is used to transfer diagnostic data to an application program.

Diagnostic data

The diagnostic data can be called up via the communications interface or via a connected fieldbus. All base units that have an Ethernet interface also support Modbus/TCP.

The diagnostic data may only be used for non-safety purposes, e.g. visualisation.

The diagnostic data on PNOZmulti systems is:

- Version:

  Product number, device version,

  Serial number
- Status of inputs/outputs:

  Indicates whether inputs and outputs are active or inactive (open/closed)
- LED status:

  Indicates the status of the LEDs on the base unit and expansion modules (on/off/flashes), plus the operating mode (start up, RUN, STOP)
- Simplified status scan:

  Shows group messages relating to the safety system: Signal changes, LED status, operating statuses

System description
Diagnostics

- Virtual inputs and outputs:

  Virtual inputs can be set. The status of the virtual inputs and outputs can be scanned.
- Diagnostic word:

  The diagnostic word contains the status of elements from the user program within the PNOZmulti.
- Test data:

  To check communication.
- Data in table form:

  This is structured data (arranged in tables and segments) from the PNOZmulti, as it could also be read via a fieldbus module:

  – Configuration
  – Status of the inputs and outputs
  – Status of LED
  – Diagnostic word
  – Element types
- Expanded diagnostic options using a visualisation system (e.g. PASvisu with PMI).

  An expanded diagnostic configuration can be created in the PNOZmulti Configurator. The diagnostic configuration enables appropriate event messages to be displayed in the case of:

  – Errors in or on the PNOZmulti:

    Includes the event messages that are triggered when there are errors in or on the PNOZmulti (error stack)
  – Changes in the operating status of the PNOZmulti; messages are triggered when safeguards, inputs, outputs and connection points reach a defined state

PNOZmulti event messages can also be supplemented through additional information, which is helpful during diagnostics. With expanded diagnostics, a display unit is connected to a PNOZmulti. If an event occurs in or on the PNOZmulti, an event telegram is sent to the display unit. The event telegram is evaluated in the display unit. In most cases, the event message that corresponds to the event is displayed and is entered in the event list. The event message contains a description of the event. A remedy can be displayed for each event message. The remedy describes how to react to the event, in other words, what "actions" to take.

The diagnostic configuration is project-related, i.e. a separate diagnostic configuration is created for each PNOZmulti project. Then the diagnostic configuration is downloaded to the PNOZmulti and to the display unit. The diagnostic configuration is described in detail in the PNOZmulti Configurator's online help.

System description
Diagnostics

Error stack

The error stack on the PNOZmulti contains important information for diagnostics and troubleshooting. The error stack can be read out by the PNOZmulti Configurator. It contains messages and help texts, for example

- Hardware errors
- Wiring error
- Configuration errors
- Errors in the operation of the interface or fieldbus
- Errors in the project's user program
- Messages relating to differences between the programs stored on the PNOZmulti and chip card

Diagnostic word

A diagnostic word can be called up for those elements of the PNOZmulti Configurator interface that have the ability to store a status:

- Online in the PNOZmulti Configurator
- Via the Ethernet or serial interface on the base unit
- Via a connected fieldbus

The diagnostic word contains information about a certain element, e.g.

- Operating states (e.g. switch operated)
- Error messages (e.g. monitoring time elapsed)

An individual bit from a diagnostic word can be evaluated in the user program of the PNOZmulti Configurator.

Installation
General guidelines

For detailed information about the installation of the PNOZmulti systems, please read the installation manual for the PNOZmulti.

The position of the expansion modules is defined in the PNOZmulti Configurator. The expansion modules are connected to the left or right of the base unit, depending on the type.

Please refer to the section entitled System expansion [📖 30] for details of the number of modules that can be connected to the base unit and the module types.

Install the expansion modules in the position in which it is configured in the PNOZmulti Configurator. For module selection please refer to the online help for the PNOZmulti Configurator.

Installation
Install configurable safety systems PNOZmulti

Control cabinet installation

- The control system should be installed in a control cabinet with a protection type of at least IP54. Fit the control system to a horizontal mounting rail. The venting slots must face upward and downward. Other mounting positions could destroy the control system.
- Use the locking elements on the rear of the unit to attach it to a mounting rail. Connect the control system to the mounting rail in an upright position, so that the earthing springs on the control system are pressed on to the mounting rail.
- The ambient temperature of the devices in the control cabinet must not exceed the figure stated in the technical details. Air conditioning may otherwise be required.
- To comply with EMC requirements, the mounting rail must have a low impedance connection to the control cabinet housing.

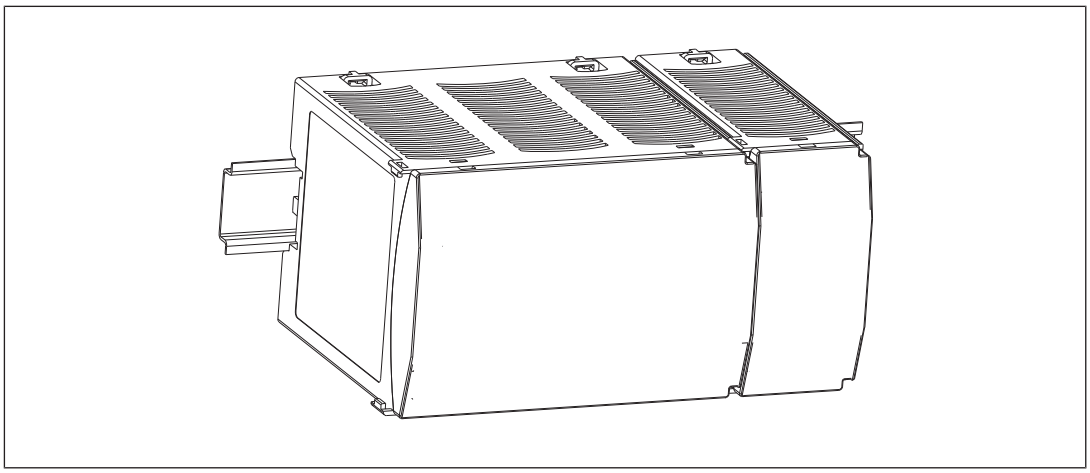

Installation

Install configurable safety systems PNOZmulti

Install base unit without expansion module

- The terminator must be fitted to the side of the base unit marked “Termination/Link”.
- Do not fit a terminator on the left hand side of the base unit.

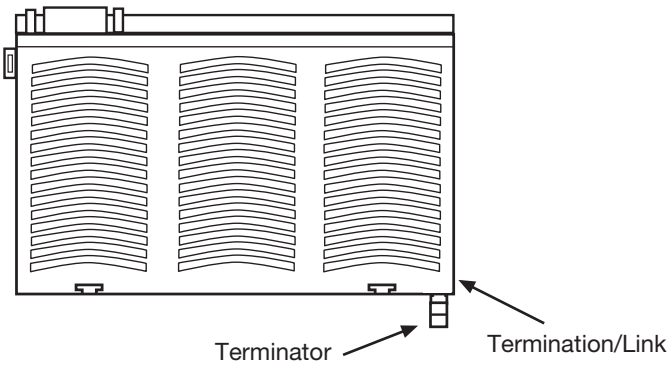

Installation
Install configurable safety systems PNOZmulti

Connecting the base unit and expansion modules

The position of the expansion modules is defined in the PNOZmulti Configurator. The expansion modules are connected to the left or right of the base unit, depending on the type.

Please refer to the document "PNOZmulti System Expansion" for details of the number of modules that can be connected to the base unit and the module types.

The modules are linked via jumpers.

There are 2 pin connectors on the rear of the base unit.

A max. of 12 expansion modules plus one fieldbus module may be connected to one base unit.

- Ensure that no terminator is connected.
- Connect the base unit, the expansion modules and the fieldbus module using the jumpers supplied.
- The terminator must be fitted to the last expansion module to the right of the base unit.
- A terminator must not be fitted to the last expansion module to the left of the base unit.

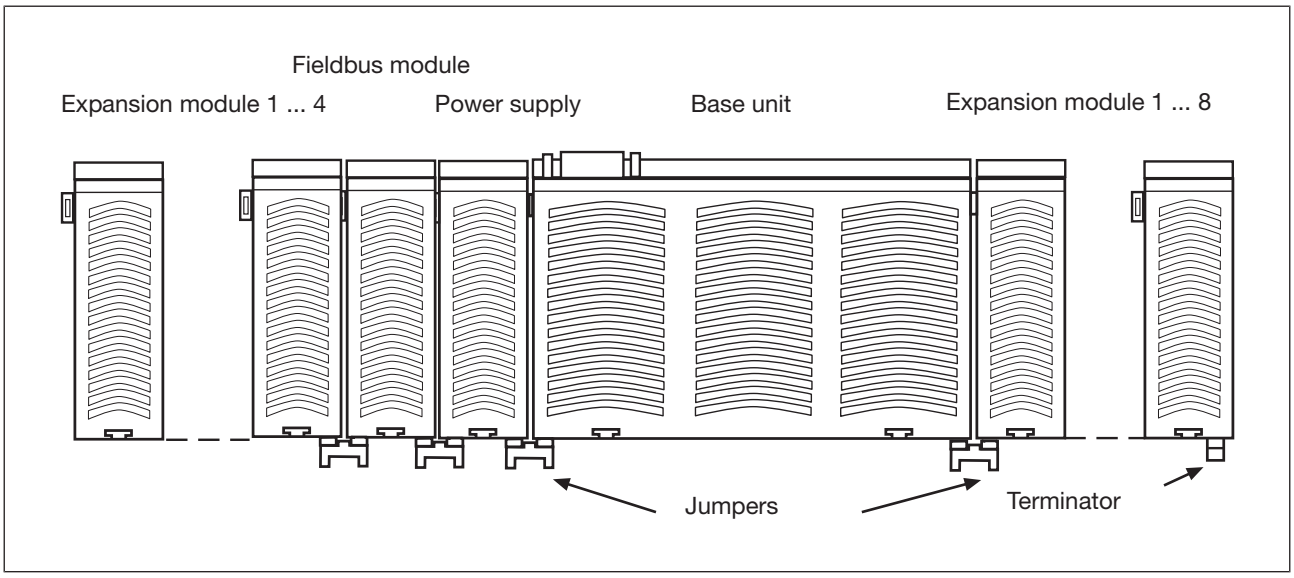

Installation
Install configurable small control systems PNOZmulti Mini

Control cabinet installation

- The unit should be installed in a control cabinet with a protection type of at least IP54.
- Fit the safety system to a horizontal mounting rail. The venting slots must face upwards and downwards. Other mounting positions could destroy the safety system.
- Use the notch on the rear of the unit to attach it to a mounting rail.
- In environments exposed to heavy vibration, the unit should be secured using a fixing element (e.g. retaining bracket or end angle).
- Push the unit upwards or downwards before lifting it from the mounting rail.
- To comply with EMC requirements, the mounting rail must have a low impedance connection to the control cabinet housing.

Installation

Install configurable small control systems PNOZmulti Mini

Mounting distances

With control cabinet installation it is essential to maintain a certain distance from the top and bottom, as well as to other heat-producing devices (see diagram). The values stated for the mounting distances are minimum specifications.

The ambient temperature in the control cabinet must not exceed the figure stated in the technical details. Air conditioning may otherwise be required.

Mounting distances:

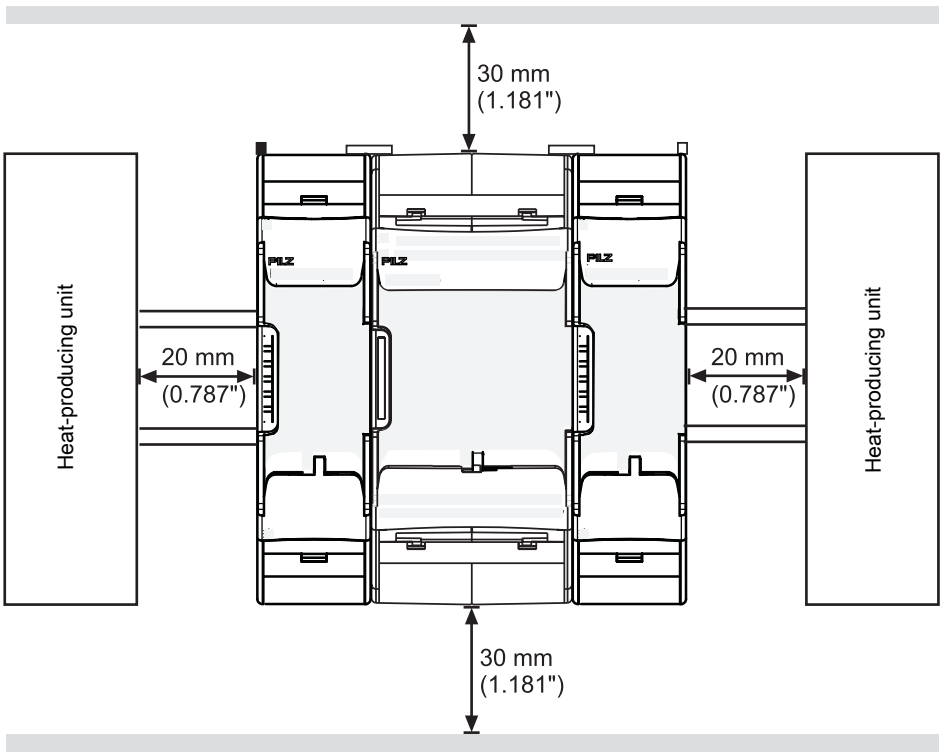

Installation

Install configurable small control systems PNOZmulti Mini

Install base unit without expansion module

Make sure that the terminators are inserted on the top left and right of the unit :

- Left: Black/yellow terminator
- Right: Yellow terminator

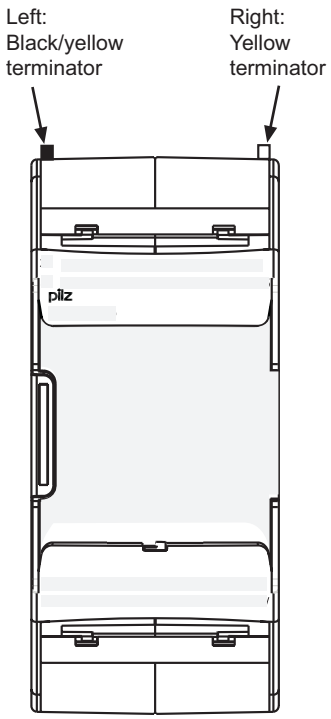

Installation

Install configurable small control systems PNOZmulti Mini

Connecting the base unit and expansion modules

The position of the expansion modules is defined in the PNOZmulti Configurator. The expansion modules are connected to the left or right of the base unit, depending on the type.

Please refer to the document "PNOZmulti System Expansion" for details of the number of modules that can be connected to the base unit and the module types.

The modules are linked via jumpers.

- Remove the terminator on the side of the base unit and on the expansion module.
- Before installing the units on the mounting rail, connect the base unit to the expansion module using the jumper supplied .
- Fit the appropriate terminator to the unconnected interfaces on the base unit and expansion module.
  - Left-hand side on the base unit and expansion modules to the left of the base unit: Black/yellow terminator
  - Right-hand side on the base unit and expansion modules to the right of the base unit: Yellow terminator

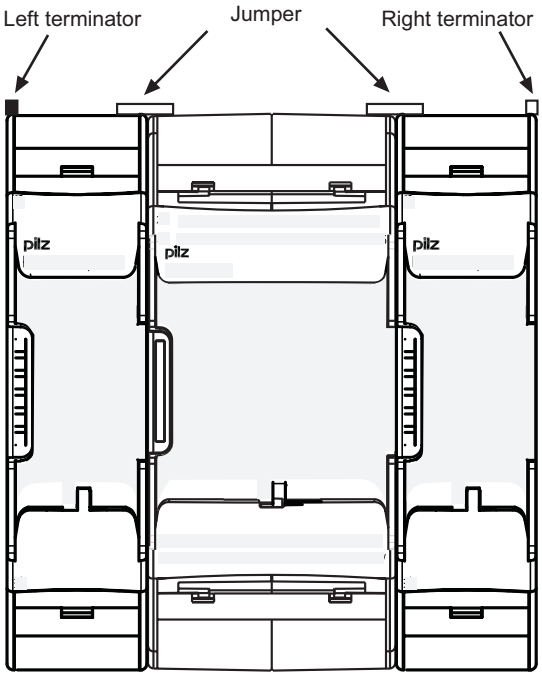

Installation
Install configurable control systems PNOZmulti 2

Control cabinet installation

- The unit should be installed in a control cabinet with a protection type of at least IP54.
- Install the system vertically on to a horizontal mounting rail. The venting slots must face upward and downward. Other mounting positions could damage the safety system.
- Use the locking elements on the rear of the unit to attach it to a mounting rail.
- In environments exposed to heavy vibration, the unit should be secured using a fixing element (e.g. retaining bracket or end angle).
- Open the locking slide before lifting the unit from the mounting rail.
- To comply with EMC requirements, the mounting rail must have a low impedance connection to the control cabinet housing.

Installation
Install configurable control systems PNOZmulti 2

Mounting distances

With control cabinet installation it is essential to maintain a certain distance from the top and bottom, as well as to other heat-producing devices (see diagram). The values stated for the mounting distances are minimum specifications.

The ambient temperature in the control cabinet must not exceed the figure stated in the technical details. Air conditioning may otherwise be required.

Mounting distances:

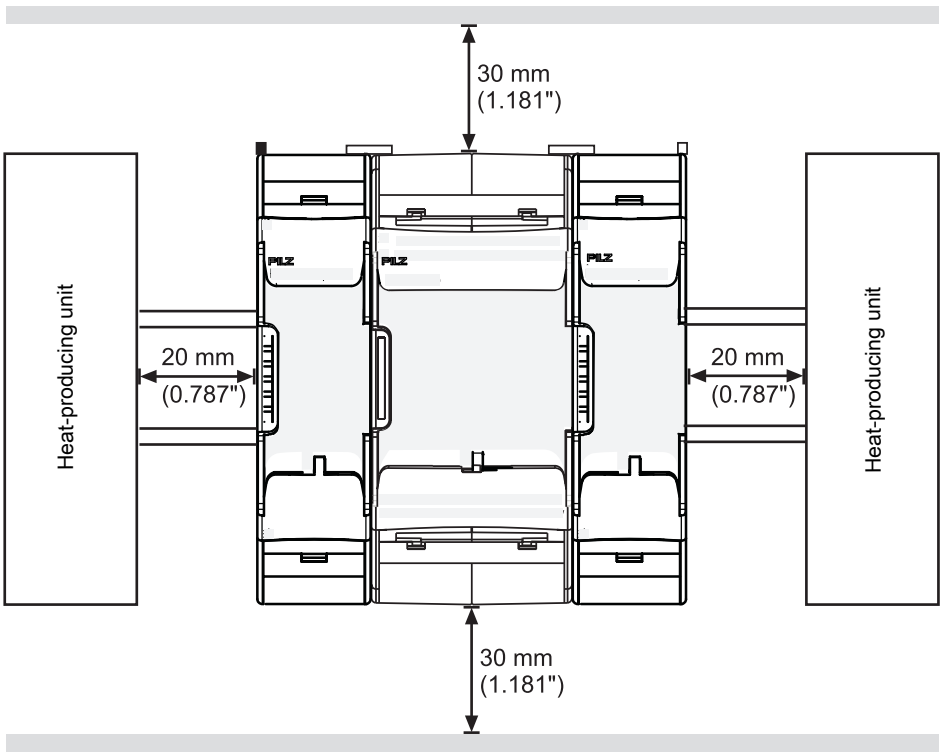

Installation

Install configurable control systems PNOZmulti 2

Install base unit without expansion module

Make sure that the terminators are inserted on the top left and right of the unit.

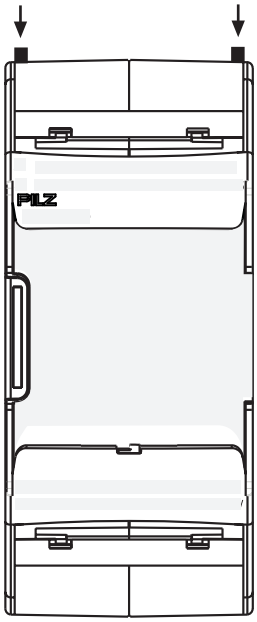

Installation
Install configurable control systems PNOZmulti 2

Connecting the base unit and expansion modules

The position of the expansion modules is defined in the PNOZmulti Configurator. The expansion modules are connected to the left or right of the base unit, depending on the type.

Please refer to the document "PNOZmulti System Expansion" for details of the number of modules that can be connected to the base unit and the module types.

The modules are linked via jumpers.

- Remove the terminator on the side of the base unit and on the expansion module.
- Install the base unit and expansion modules on the mounting rail in the order configured in the PNOZmulti Configurator and connect the units using the jumper supplied.
- Fit the terminator to the unconnected interfaces on the base unit and expansion module.

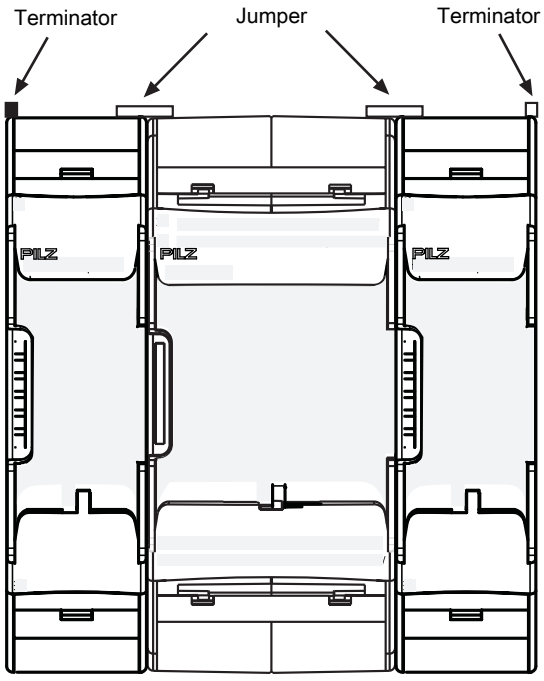

System expansion
Configurable safety systems PNOZmulti

Maximum system expansion:

- Right of the base unit:
  - 8 expansion modules
- Left of the base unit
  - 4 expansion modules

    and
  - 1 fieldbus module
- Connectable to the link module PNOZ ml2p:

  4 decentralised modules per link module (max. 16 decentralised modules)

Example of a control system PNOZmulti: Base unit PNOZ m1p ETH with expansion modules

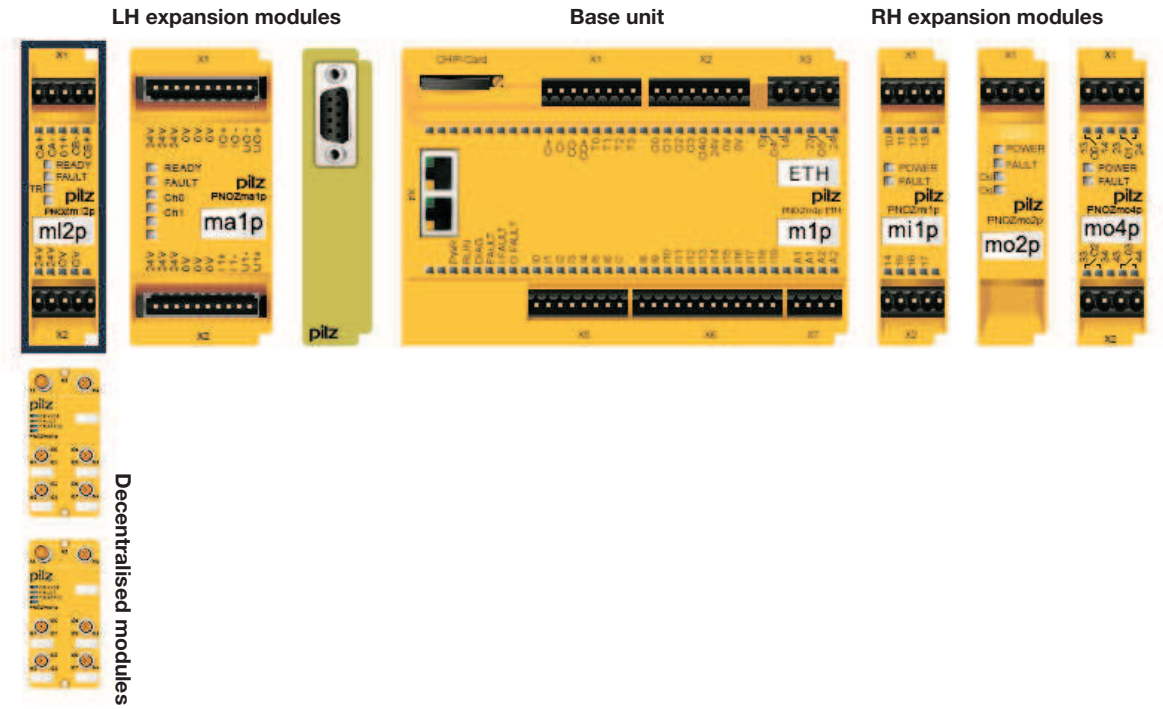

System expansion
Configurable safety systems PNOZmulti

System expansion depends on the base units:

Expansion modules		Slot	PNOZ m0p (ETH)	PNOZ m1p (ETH)	PNOZ m2p (ETH)	PNOZ m3p (ETH)
			Number of connectable modules			
Analogue input modules		**Left**	**-**	**4**	**4**	**4**
PNOZ ma1p	Analogue input module					
Link modules		**Left**	**4**	**4**	**4**	**4**
PNOZ ml1p	To connect 2 base units					
PNOZ ml2p	To connect a base unit to up to 4 decentralised modules PDP67 (see below)					
Decentralised modules (connectable to the link module PNOZ ml2p)		**Left**	**16**	**16**	**16**	**16**
PDP67 F 8DI ION	IP67, 8 safe inputs					
PDP67 F 8DI ION HP	IP67, 8 safe inputs					
Input modules		**Right**	**-**	**8**	**8**	**8**
PNOZ mi1p	8 safe inputs					
PNOZ mi2p	8 inputs for standard applications					
Output modules		**Right**	**-**	**6**	**6**	**6**
PNOZ mo1p	4 safe semiconductor outputs					
PNOZ mo2p	2 safe relay outputs					
PNOZ mo3p	2 safe 2-pole semiconductor outputs					
PNOZ mo4p	4 safe relay outputs					
PNOZ mo5p	4 safe, diverse relay outputs					
Output modules for standard applications		**Right**	**-**	**8**	**8**	**8**
PNOZ mc1p	16 semiconductor outputs for standard applications					

System expansion
Configurable safety systems PNOZmulti

Expansion modules		Slot	PNOZ m0p (ETH)	PNOZ m1p (ETH)	PNOZ m2p (ETH)	PNOZ m3p (ETH)
Speed monitor		**Right**	**-**	**4**	**4**	**4**
PNOZ ms1p	Monitoring of 2 axes Connectable encoders: Proximity switch, incremental encoder Sin/Cos, TTL					
PNOZ ms2p HTL	Monitoring of 2 axes Connectable encoders: Proximity switch, incremental encoder HTL					
PNOZ ms2p TTL	Monitoring of 2 axes Connectable encoders: Proximity switch, incremental encoder Sin/Cos, TTL					
PNOZ ms3p HTL	Monitoring of 2 axes Connectable encoders: Incremental encoder HTL					
PNOZ ms3p TTL	Monitoring of 2 axes Connectable encoders: Incremental encoder Sin/Cos, TTL					
PNOZ ms4p	Monitoring of 1 axis Connectable encoders: Incremental encoder Sin/Cos, TTL, HTL					

System expansion
Configurable safety systems PNOZmulti

Expansion modules		Slot	PNOZ m0p (ETH)	PNOZ m1p (ETH)	PNOZ m2p (ETH)	PNOZ m3p (ETH)
Fieldbus modules		**Left**	**1**	**1**	**1**	**1**
PNOZ mc0p	Power supply to supply voltage to fieldbus modules					
PNOZ mc2p	EtherCAT					
PNOZ mc2.1p	EtherCAT (DS301 V4.02 compliant)					
PNOZ mc3p	PROFIBUS-DP					
PNOZ mc4p	DeviceNet					
PNOZ mc5p	Interbus					
PNOZ mc5.1p	Interbus fibre-optic cable					
PNOZ mc6p	CANopen					
PNOZ mc6.1p	CANopen					
PNOZ mc7p	CC-Link					
PNOZ mc8p	Ethernet IP/Modbus TCP					
PNOZ mc9p	Profinet					
PNOZ mc10p	sercos III					
PNOZ mc12p	Ethernet POWERLINK					

System expansion
Configurable safety systems PNOZmulti

System reaction times

The reaction time between an input switching off and a linked output in the system switching off depends on the delay time at the input and the delay time at the output. The times vary depending on which input/output is used by which device.

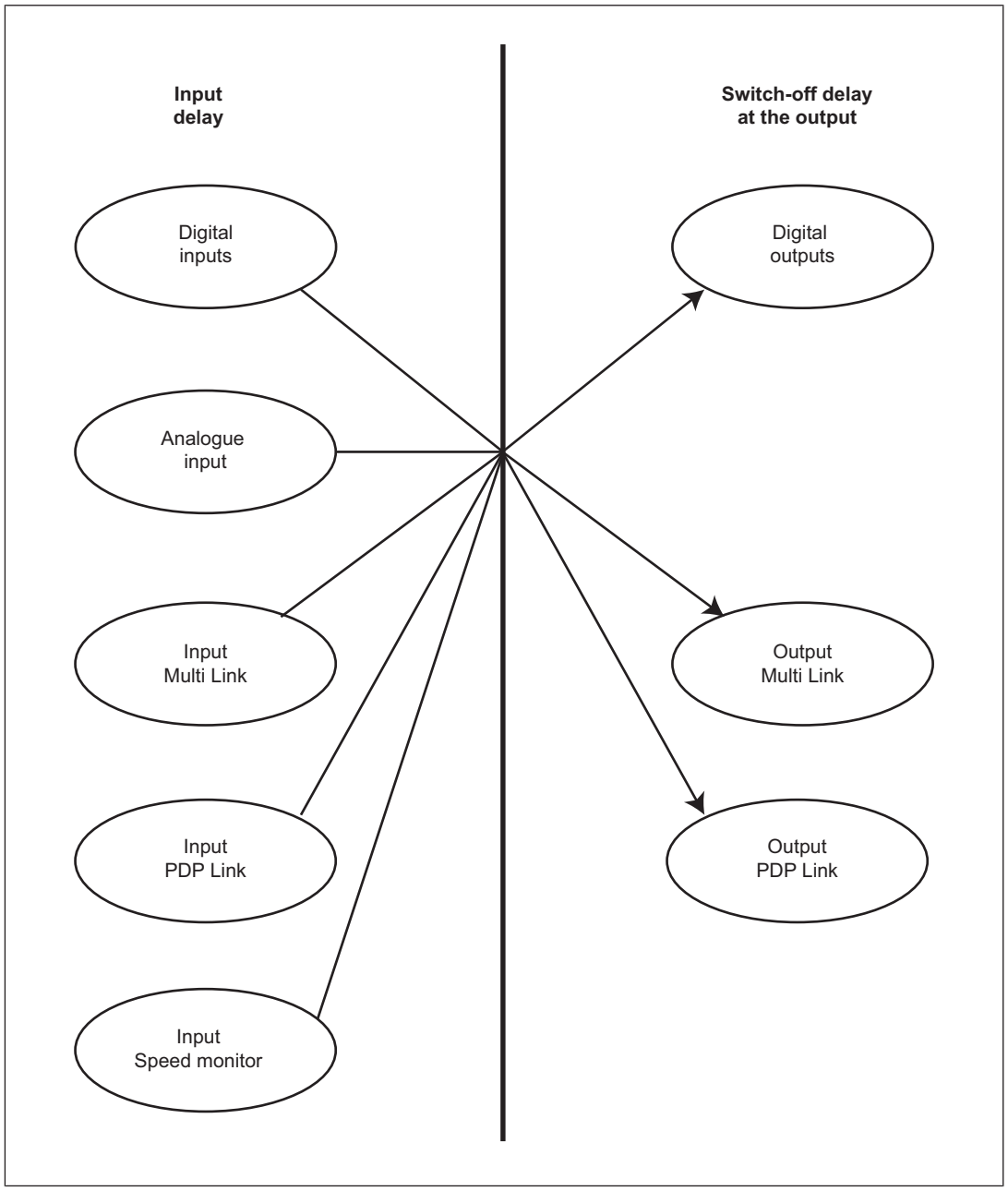

System expansion
Configurable safety systems PNOZmulti

Calculation of the max. reaction time:

t ReactionMax = **t** Max. input delay + **t** Max. switch-off delay at the output

Please note that the reaction time is also increased by

- Delay times configured in the user program
- Delay on the sensor that is used
- Delay on the actuator that is used
- Delay due to periphery devices or control systems

Reaction times of the base units and expansion modules

Modules	Max. input delay	Max. switch-off delay Output (incl. processing time)
PNOZ m0p … **PNOZ m3p**	**4 ms**	**30 ms** (semiconductor output) **50 ms** (relay output)
PNOZ mi1p … **PNOZ mi2p**	**4 ms**	**-**
PNOZ mo1p, **PNOZ mo3p**	**-**	**30 ms**
PNOZ mo2p, **PNOZ mo4p,** **PNOZ mo5p**	**-**	**50 ms**
PNOZ ml1p	**0 ms** (1)	**35 ms** (connection's transmission delay)
PNOZ ml2p	**15 ms** + Max. processing time of the input PDP67 (2)	**35 ms**
PNOZ ma1p	**100 ms**	**-**
PNOZ ms1p … **PNOZ ms4p**	**10 ms [+1/f]** (+conf.switch-off delay)	**-**

(1) An input delay is not considered because it is already considered in the output delay of the communication partner.

(2) See technical details in the operating manual

To simplify the calculation, the stated times include various times that need to be considered within the system. As a result, transmission times, for example, do not need to be included separately in the calculation. The processing time in the base unit is already considered in the max. switch off delay at the output.

System expansion
Configurable safety systems PNOZmulti

Example configuration: Input from PNOZ mi2p, output from PNOZ mo3p

Input PNOZ mi2p tInput Delay.Max	Output PNOZ mo3p tSwitch-offDelay.Max
4 ms	30 ms

$t_{ReactionMax}$ = 4 ms + 30 ms

$t_{ReactionMax}$ = 34 ms

Example configuration: Input from base unit PNOZ m1p, output from PNOZ mo4p

Input PNOZ m1p Input Delay.Max	Output PNOZ mo4p Switch-off Delay.Max
4 ms	50 ms

$t_{ReactionMax}$ = 4 ms + 50 ms

$t_{ReactionMax}$ = 54 ms

System expansion
Configurable small control systems PNOZmulti Mini

Maximum system expansion:

- Right of the base unit:
  - 1 PNOZsigma expansion module (+1 contact expansion)
- Left of the base unit
  - 1 fieldbus module

    and
  - 1 communication module

    and
  - 4 link modules
- Connectable to the link module PNOZ mml2p:

  4 decentralised modules per link module (max. 16 decentralised modules)

Example of a control system PNOZmulti Mini: Base unit PNOZ mm0.1p with expansion modules

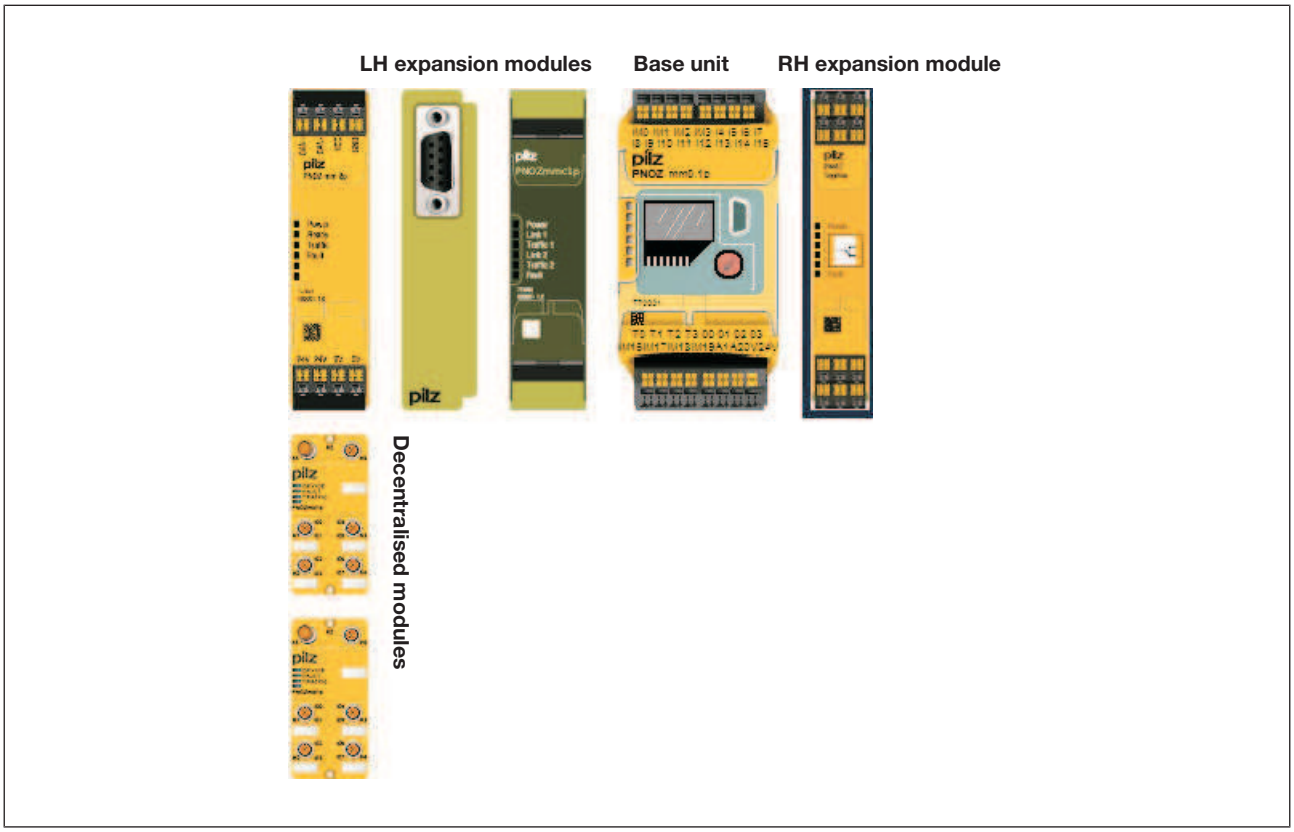

System expansion

Configurable small control systems PNOZmulti Mini

System expansion depends on the base units:

Expansion modules		Slot	PNOZ mm0p	PNOZ mm0.1p	PNOZ mm0.2p
			Number of connectable modules		
Link modules		**Left**	**-**	**4**	**4**
PNOZ mml1p	To connect 2 base units				
PNOZ mml2p	To connect a base unit to up to 4 decentralised modules PDP67 (see below)				
Decentralised modules (connectable to the link module PNOZ mml2p)		**Left**	**-**	**16**	**16**
PDP67 F 8DI ION	IP67, 8 safe inputs				
PDP67 F 8DI ION HP	IP67, 8 safe inputs				
Communication modules		**Left**	**-**	**1**	**1**
PNOZ mmc1p	Ethernet interface				
PNOZ mmc2p	Serial interface RS232				
Fieldbus modules		**Left**	**-**	**1**	**1**
PNOZ mmc3p	PROFIBUS DP				
PNOZ mmc4p	DeviceNet				
PNOZ mmc6p	CANopen				
PNOZ mmc7p	CC-Link				
PNOZ mmc11p	EtherCAT				
PNOZ mmc12p	Ethernet POWERLINK				
PNOZsigma output modules		**Right**	**-**	**1**	**1**
PNOZ s7	1 safe relay output				
PNOZ s7.1	1 safe relay output (+ 1 PNOZ s7, PNOZ s10 or PNOZ s11 can be connected as a contact expansion module)				
PNOZ s7.2	1 safe relay output (+ 1 expansion module PNOZ s7, PNOZ s10 or PNOZ s11 can be connected)				
PNOZ s10	1 safe relay output				
PNOZ s11	1 safe relay output				
PNOZ s22	2 safe relay outputs				

System expansion
Configurable small control systems PNOZmulti Mini

System reaction times

The reaction time between an input switching off and a linked output in the system switching off depends on the delay time at the input and the delay time at the output. The times vary depending on which input/output is used by which device.

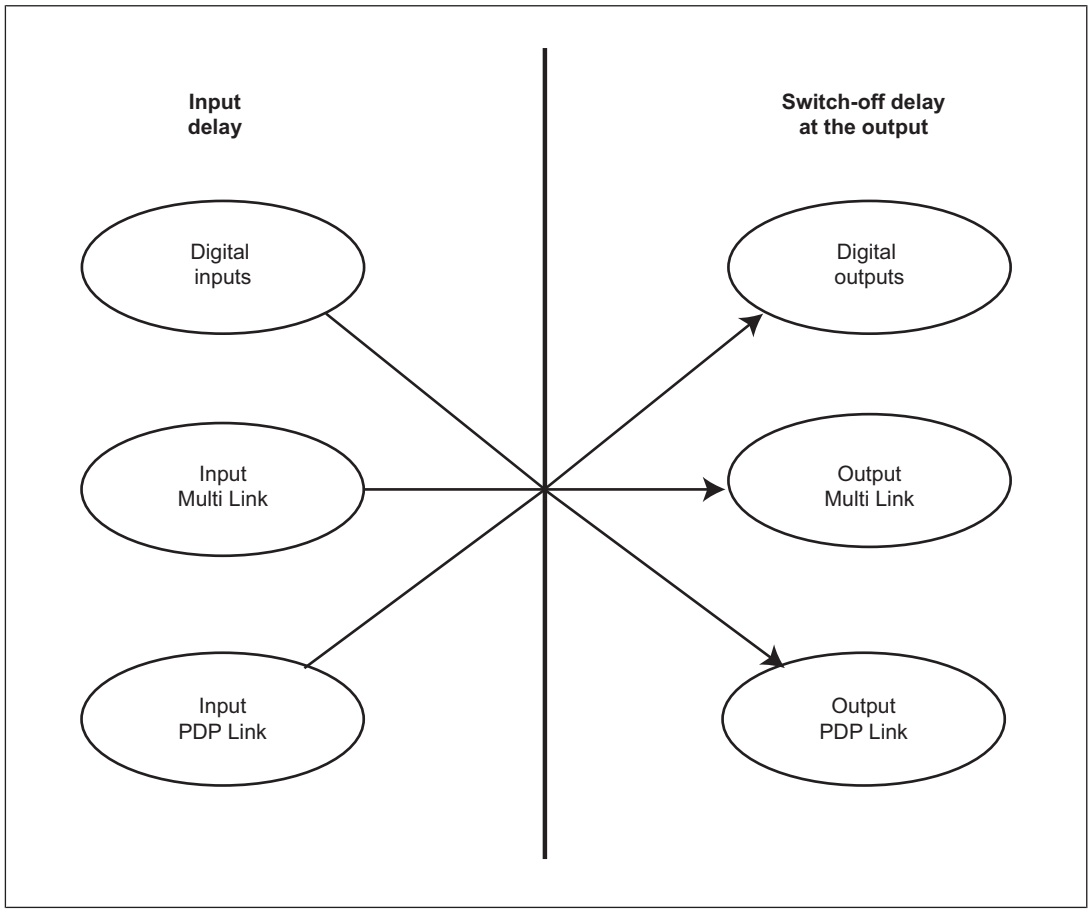

Calculation of the max. reaction time:

t ReactionMax = **t** Max. input delay + **t** Max. switch-off delay at the output

Please note that the reaction time is also increased by

- Delay times configured in the user program
- Delay on the sensor that is used
- Delay on the actuator that is used
- Delay due to periphery devices or control systems

System expansion
Configurable small control systems PNOZmulti Mini

Reaction times of the base units and expansion modules

Modules	Max. input delay	t Max. switch-off delay Output (incl. processing time)
PNOZ mm0p … PNOZ mm0.2p	**4 ms**	**30 ms** (semiconductor output)
PNOZ mm0.2p	**4 ms**	**35 ms** (virtual outputs for data transfer when 2 base units are connected)
PNOZ s7, PNOZ s7.1, PNOZ s7.2, PNOZ s10, PNOZ s11, PNOZ s22	**-**	**30 ms** + delay-on de-energisation of expansion module
PNOZ mml1p	**0 ms** (1)	**35 ms** (connection's transmission delay)
PNOZ mml2p	**15 ms** + input delay PDP67 (2)	**35 ms**

(1) An input delay is not considered because it is already considered in the output delay of the communication partner.

(2) See technical details in the operating manual

To simplify the calculation, the stated times include various times that need to be considered within the system. As a result, transmission times, for example, do not need to be included separately in the calculation. The processing time in the base unit is already considered in the max. switch off delay at the output.

Example configuration: Input from base unit PNOZ mm0.1p, output from PNOZ s7

Input PNOZ mm0.1p Input Delay.Max	Output PNOZ mo4p Switch-off Delay.Max
4 ms	**30 ms + delay-on de-energisation 30 ms**

$t_{ReactionMax}$ = 4 ms + 30 ms + 30 ms

$t_{ReactionMax}$ = 64 ms

System expansion
Configurable control systems PNOZmulti 2

Maximum system expansion:

- Right of the base unit:

  PNOZ m B0:

  – 6 expansion modules

  PNOZ m B1:

  – 12 expansion modules (restriction: The number of modules PNOZ m EF 4DI4DOR, PNOZ m EF 4DI4DORD and PNOZ m EF 2MM is in total limited to a maximum of 8)

  – 1 standard module (position: last module to the right of the safety modules)
- Left of the base unit

  – 4 expansion modules

  – PNOZ m B0: 1 communication module

  – 1 fieldbus module

Example of a control system PNOZmulti 2: Base unit PNOZ m B0 with expansion modules

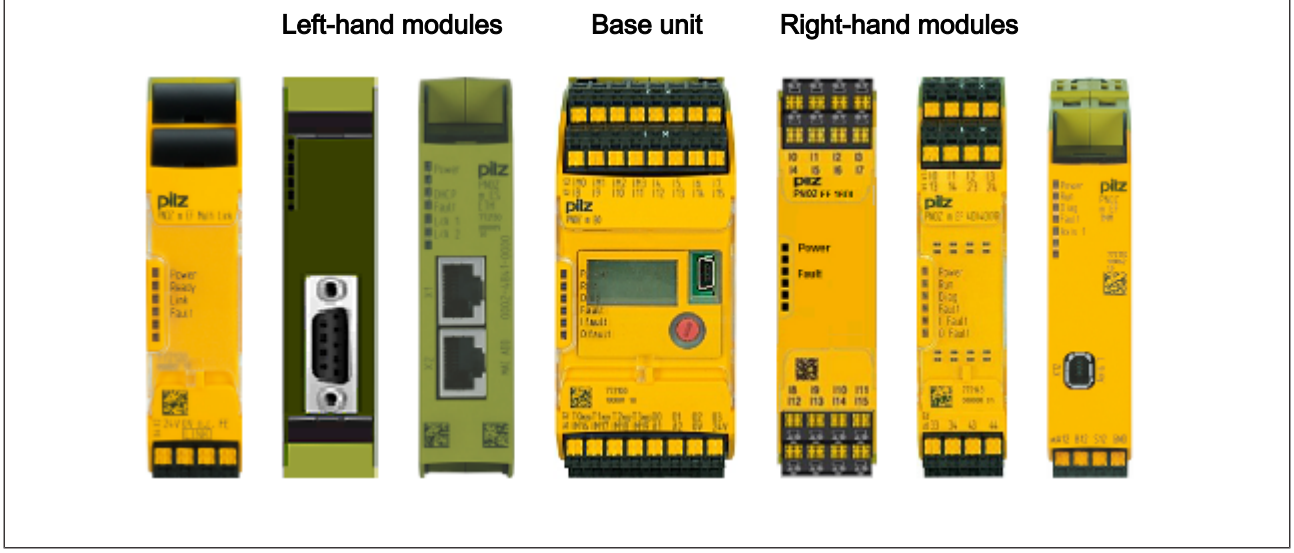

System expansion
Configurable control systems PNOZmulti 2

System expansion depends on the base units:

Expansion modules		Slot	PNOZ m B0	PNOZ m B1 PNOZ m B1 Burner
			Number of connectable modules	
Link modules		**Left**	**4**	**4**
PNOZ m EF Multi Link	To connect 2 base units			
PNOZ m EF PDP Link	To connect a base unit to up to 4 decentralised modules PDP67			
PNOZ m EF SafetyNET	To connect up to 16 SafetyNET p RTFL subscribers in a linear structure	**Left** 1 safe module to the left of the base unit	**1**	**1**
Analogue input modules		**Right**	**6**	**12**
PNOZ m EF 4AI	4 safe analogue inputs			
Input module		**Right**	**6**	**12**
PNOZ m EF 16DI	16 safe inputs			
Input and output modules				
PNOZ m EF 8DI4DO	8 safe inputs, 4 safe semiconductor outputs			
PNOZ m EF 8DI2DOT	8 safe inputs, 2 safe dual-pole semiconductor outputs			
PNOZ m EF 4DI4DOR	4 safe inputs, 4 safe relay outputs			**8** (in total with PNOZ m EF 2MM)
PNOZ m EF 4DI4DORD	4 safe inputs, 4 safe diverse relay outputs			
Output module for standard applications		**Right** To the right of the safe expansion modules	-	**1**
PNOZ m ES 14DO	14 semiconductor outputs for standard applications			

System expansion
Configurable control systems PNOZmulti 2

Expansion modules		Slot	PNOZ m B0	PNOZ m B1 PNOZ m B1 Burner
Motion monitoring modules		**Right**	**6**	
PNOZ m EF 1MM	Monitoring of 1 axis			**12**
PNOZ m EF 1MM2DO	Monitoring of 1 axis, 2 safe semiconductor outputs, 1 semiconductor output for standard functions			
PNOZ m EF 2MM	Monitoring of 2 axes			**8** (in total with PNOZ m EF 4DI4DOR and PNOZ m EF 4DI4-DORD)
Fieldbus modules		**Left**	**1**	**1**
PNOZ m ES Profibus	Profibus			
PNOZ m ES CANopen	CANopen			
PNOZ m ES CC-Link	CC-Link			
PNOZ m ES EtherCAT	EtherCAT			
PNOZ m ES Powerlink	Powerlink			
PNOZ m ES EtherNet/IP	EtherNet/IP			
PNOZ m ES Profinet	Profinet			
Communication modules		**Left**	**1**	**-**
PNOZ m ES ETH	Ethernet interface			
PNOZ m ES RS232	Serial interface RS232			

Connected devices		Interface	PNOZ m B0	PNOZ m B1
PITreader	System for authentication and authorisation on control systems	Ethernet (Modbus TCP)	-	**4**
Visu Panel	Display unit for selecting safe operating modes (approved display units see MSO flex visu System Description)	Ethernet (Modbus TCP)	-	**4**

System expansion
Configurable control systems PNOZmulti 2

System reaction times

The reaction time between an input switching off and a linked output in the system switching off depends on the delay time at the input, the delay time at the output and the processing time. The times vary depending on which input/output is used by which device.

System expansion

Configurable control systems PNOZmulti 2

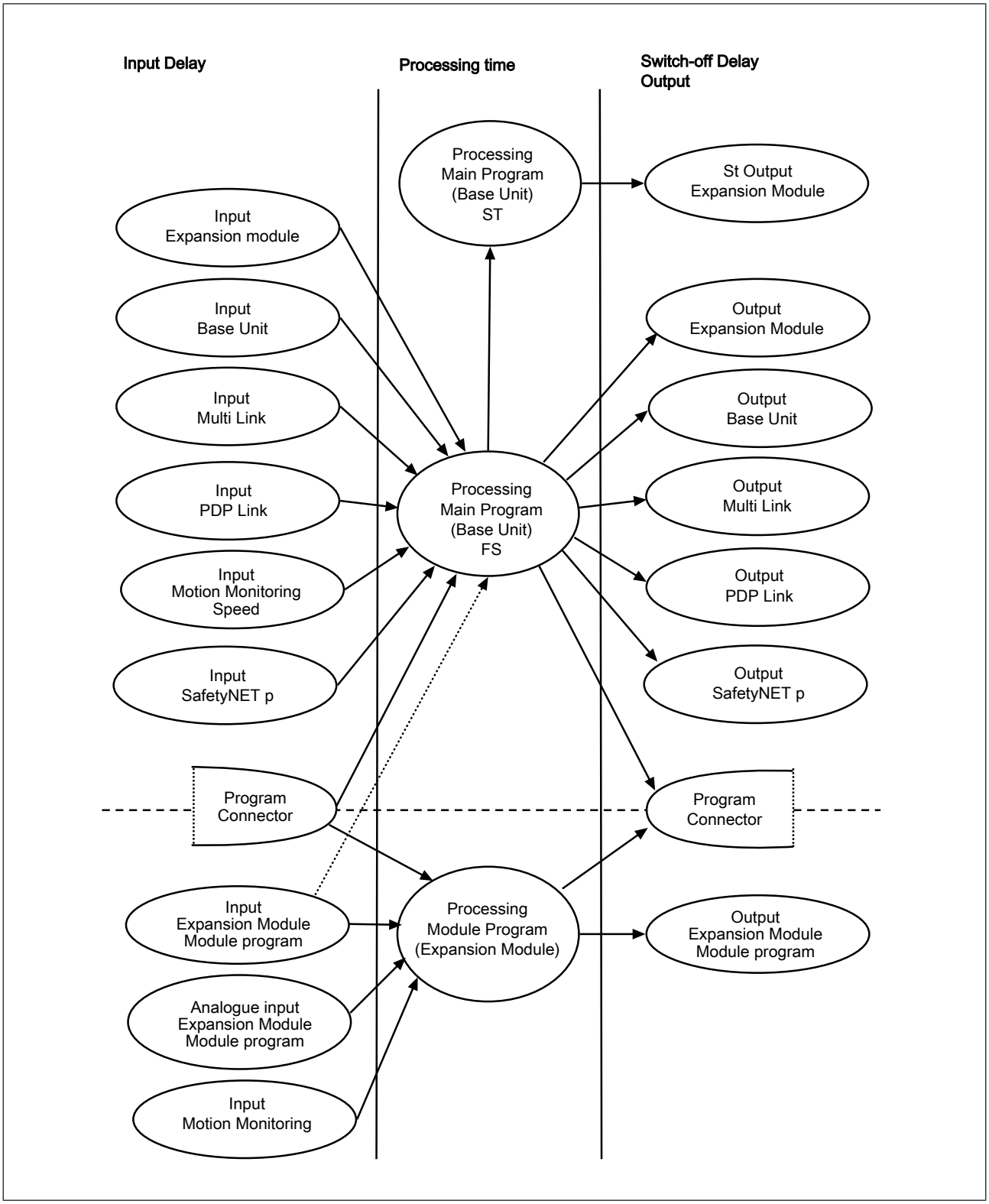

System expansion
Configurable control systems PNOZmulti 2

Calculation of the max. reaction time:

t ReactionMax = **t** Max input delay + **t** Max processing time. + **t** Max switch-off delay at the output

Please note that the reaction time is also increased by

- Delay times configured in the user program
- Delay on the sensor that is used
- Delay on the actuator that is used

Maximum reaction times of the base units and expansion modules

Modules	Max. input delay	Max. processing time	Max. switch-off delay Output
PNOZ m B0	**2 ms**	**30 ms**	**1 ms**
PNOZ m B1 (FS)	-	**30 ms**	-
PNOZ m B1 (ST)	-	**3 ms**	-
PNOZ m EF 16DI	**8 ms**	-	-
PNOZ m EF 4AI	**8 ms +** signal smoothing (1)	**5 ms**	-
PNOZ m EF 8DI4DO	**8 ms**	-	**3 ms**
PNOZ m EF 4DI4DOR	**8 ms**	-	**22 ms**
PNOZ m EF 4DI4DORD	**8 ms**	-	**22 ms**
PNOZ m EF 8DI2DOT	**8 ms** + pulse suppression (2)	-	**6 ms**
PNOZ m EF 8DI2DOT Input and output in the module program	**8 ms** + pulse suppression (2)	-	-
PNOZ m EF Multi Link	**0 ms** (3)	-	**5 ms** (connection's transmission delay)
PNOZ m EF PDP Link	**15 ms** + Max. processing time of the input PDP67 (4)	-	**5 ms**
PNOZ m EF SafetyNET	**0 ms**	-	**25 ms** (connection's transmission delay)
PNOZ m EF 1MM, PNOZ m EF 2MM (configuration in the main program)	**1/f_actual + 16 ms** (5)	-	-

System expansion
Configurable control systems PNOZmulti 2

Modules	Max. input delay	Max. processing time	Max. switch-off delay Output
PNOZ m EF 1MM, **PNOZ m EF 2MM** (configuration in the module program)	**1/f_actual + 8 ms** (5)	**8 ms**	-
PNOZ m EF 1MM2DO	Speed detection: **1/f_actual + 5 ms** (5) Cascading: **1.6 ms**	**4 ms**	Semiconductor output: **1 ms** Cascading: **0.1 ms** Signal output: **0.1 ms**
PNOZ m ES 14DO	-	-	**1 ms**
Program connector	**0 ms** (6)	-	**0 ms**

(1) The signal smoothing can be set in the PNOZmulti Configurator (default setting: 2 ms).

(2) The pulse suppression time can be set in the PNOZmulti Configurator (default setting: 0.8 ms).

(3) An input delay does not need to be considered because it is already considered in the output delay of the communication partner.

(4) See technical details in the operating manual

(5) **1/f_actual** corresponds to the period length T of the measured frequency. The maximum input delay **1/f_actual + X ms** is the reaction time at the input after a limit value is exceeded.

(6) No additional time needs to be added for data exchange between main program processing and module program processing via the program connectors. This delay is already included in the processing times.

To simplify the calculation, the stated times include various times that need to be considered within the system. As a result, transmission times, for example, do not need to be included separately in the calculation.

Example configuration: Input from PNOZ m EF 8DI4DO, output from PNOZ m EF 8DI4DO

Input PNOZ m EF 8DI4DO Max. input delay	Processing in the main program Processing time	Output PNOZ m EF 8DI4DO Switch-off delay
8 ms	**30 ms**	**3 ms**

$t_{ReactionMax}$ = 8 ms + 30 ms + 3 ms

$t_{ReactionMax}$ = 41 ms

System expansion
Configurable control systems PNOZmulti 2

Example configuration: Input from base unit, output from PNOZ m EF 4DI4DOR

Input PNOZ m B0 Max. input delay	Processing in the main program Processing time	Output PNOZ m EF 8DI4DOR Switch-off delay
2 ms	30 ms	22 ms

$t_{ReactionMax}$ = 2 ms + 30 ms + 22 ms

$t_{ReactionMax}$ = 54 ms

Example configuration: Input from base unit, output from base unit

Base unit input Max. input delay	Processing in the main program Processing time	Base unit output Switch-off delay
2 ms	30 ms	1 ms

$t_{ReactionMax}$ = 2 ms + 30 ms + 1 ms

$t_{ReactionMax}$ = 33 ms

Example configuration: Input from PNOZ m EF 16DI, output for standard applications from PNOZ m ES 14DO

Input PNOZ m EF 16DI Max. input delay	Processing in the main program Processing time (FS + ST)	Output PNOZ m ES 14DO Switch-off delay
8 ms	30 ms + 3 ms	1 ms

$t_{ReactionMax}$ = 8 ms + 30 ms + 3 ms + 1 ms

$t_{ReactionMax}$ = 42 ms

Example configuration: Input from PNOZ m EF 16DI, output for standard applications from PNOZ m ES 14DO

Input PNOZ m EF 16DI Max. input delay	Processing in the main program Processing time (FS + ST)	Output PNOZ m ES 14DO Switch-off delay
8 ms	30 ms + 3 ms	1 ms

$t_{ReactionMax}$ = 8 ms + 30 ms + 3 ms + 1 ms

$t_{ReactionMax}$ = 42 ms

System expansion
Configurable control systems PNOZmulti 2

Example configuration: Input from PNOZ m EF 4AI, output from base unit

$t_{SignalSmoothing}$ = 2 ms

Input PNOZ m EF 4AI Max. input delay	Processing in the module program Processing time	Processing in the main program Processing time	Base unit output Output delay
8 ms + signal smoothing	**5 ms**	**30 ms**	**1 ms**

$t_{ReactionMax}$ = 8 ms + 2 ms + 5 ms + 30 ms + 1 ms

$t_{ReactionMax}$ = 46 ms

Example configuration: Input from PNOZ m EF 4AI, output from PNOZ m EF 8DI4DO

$t_{SignalSmoothing}$ = 2 ms

Input PNOZ m EF 4AI Max. input delay	Processing in the module program Processing time	Processing in the main program Processing time	Output PNOZ m EF 8DI4DO Switch-off delay
8 ms + signal smoothing	**5 ms**	**30 ms**	**3 ms**

$t_{ReactionMax}$ = 8 ms + 2 ms + 5 ms + 30 ms + 3 ms

$t_{ReactionMax}$ = 48 ms

Example configuration: Input from PNOZ m EF 8DI2DOT, output from PNOZ m EF 8DI2DOT (in the main program)

Input PNOZ m EF 8DI2DOT Max. input delay	Processing in the main program Processing time	Output PNOZ m EF 8DI2DOT Switch-off delay
8 ms + pulse suppression **0.8 ms**	**30 ms**	**6 ms**

$t_{ReactionMax}$ = 8 ms + 0.8 ms + 30 ms + 6 ms

$t_{ReactionMax}$ = 44.8 ms

System expansion
Configurable control systems PNOZmulti 2

Example configuration: Input from PNOZ m EF 8DI2DOT, output from PNOZ m EF 8DI4DO

Input PNOZ m EF 8DI2DOT Max. input delay	Processing in the main program Processing time	Output PNOZ m EF 8DI4DO Switch-off delay
8 ms + pulse suppression **0.8 ms**	**30 ms**	**3 ms**

$t_{ReactionMax}$ = 8 ms + 0.8 ms + 30 ms + 3 ms

$t_{ReactionMax}$ = 41.8 ms

Example configuration: Input from PNOZ m EF 1MM (configured in the main program), output from base unit

f_ist = 100 Hz

Input PNOZ m EF 1MM Max. input delay	Processing in the main program Processing time	Base unit output Switch-off delay
26 ms	**30 ms**	**1 ms**

1/f_ist = 1/100 Hz = 10 ms

1/f_ist + 16 ms = 26 ms

$t_{ReactionMax}$ = 26 ms + 30 ms + 1 ms

$t_{ReactionMax}$ = 57 ms

System expansion
Configurable control systems PNOZmulti 2

Example configuration: Input from PNOZ m EF 1MM (configured in the module program), output from PNOZ m EF 8DI4DO

f_ist = 100 Hz

Input PNOZ m EF 1MM Input Delay.Max	Processing in module program Processing Max	Program connectors (output signal from the module program to the main program)	Processing in the main program Processing Max	Output PNOZ m EF 8DI4DO Switch-off delay
18 ms	8 ms	0 ms	30 ms	3 ms

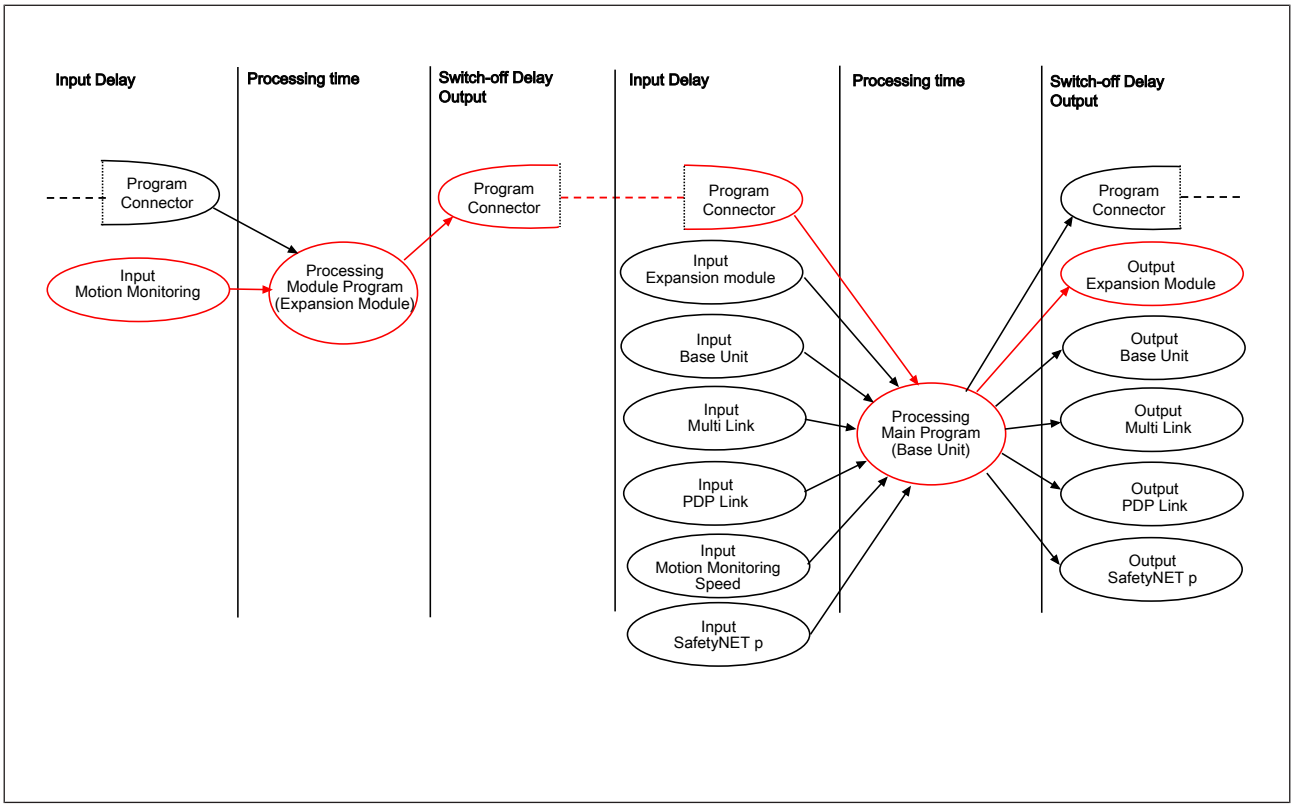

1/f_ist = 1/100 Hz = 10 ms

1/f_ist + 8 ms = 18 ms

$t_{ReactionMax}$ = 18 ms + 8 ms + 30 ms + 1 ms

$t_{ReactionMax}$ = 57 ms

Example configuration: Input from PNOZ m EF 1MM2DO, output from PNOZ m EF 1MM2DO

f_ist = 100 Hz

Input PNOZ m EF 1MM2DO Input Delay.Max	Processing in module program Max. processing time	Output PNOZ m EF 1MM2DO Switch-off delay
15 ms	4 ms	1 ms

1/f_ist = 1/100 Hz = 10 ms

1/f_ist + 5 ms = 15 ms

$t_{ReactionMax}$ = 15 ms + 4 ms + 1 ms

$t_{ReactionMax}$ = 20 ms

Test pulse suppression at the inputs

On function elements with switch type 3 (see online help for the PNOZmulti Configurator) a test pulse suppression on the inputs can be activated. This function can be used when self-monitored switches are used that create switch-off pulses > 300 µs.

When test pulse suppression is activated please note that the reaction time can increase by up to 15 ms!

System expansion
Connection of multiple PNOZmulti systems

For safe data exchange two or more configurable control systems PNOZmulti can be connected to each other.
There are various options available:

- **PNOZmulti Link connection**
  The connection is created via two connection modules and/or connection interfaces that are assigned to one base unit each.
  Any number of base units can be connected via link modules.
  However, only a max. of 4 link modules can be connected to a base unit.
- **SafetyNET p RTFL connection**
  The system PNOZmulti 2 can also be connected via SafetyNET p RTFL. Up to 16 base units can be connected in a linear structure. Each base unit can create safe connections to the other connected base units. The position of the base units in the line does not matter.
  The reaction times are independent of the number of subscribers and their position in the line.

Connection via PNOZmulti Link

Example: Connecting 4 base units

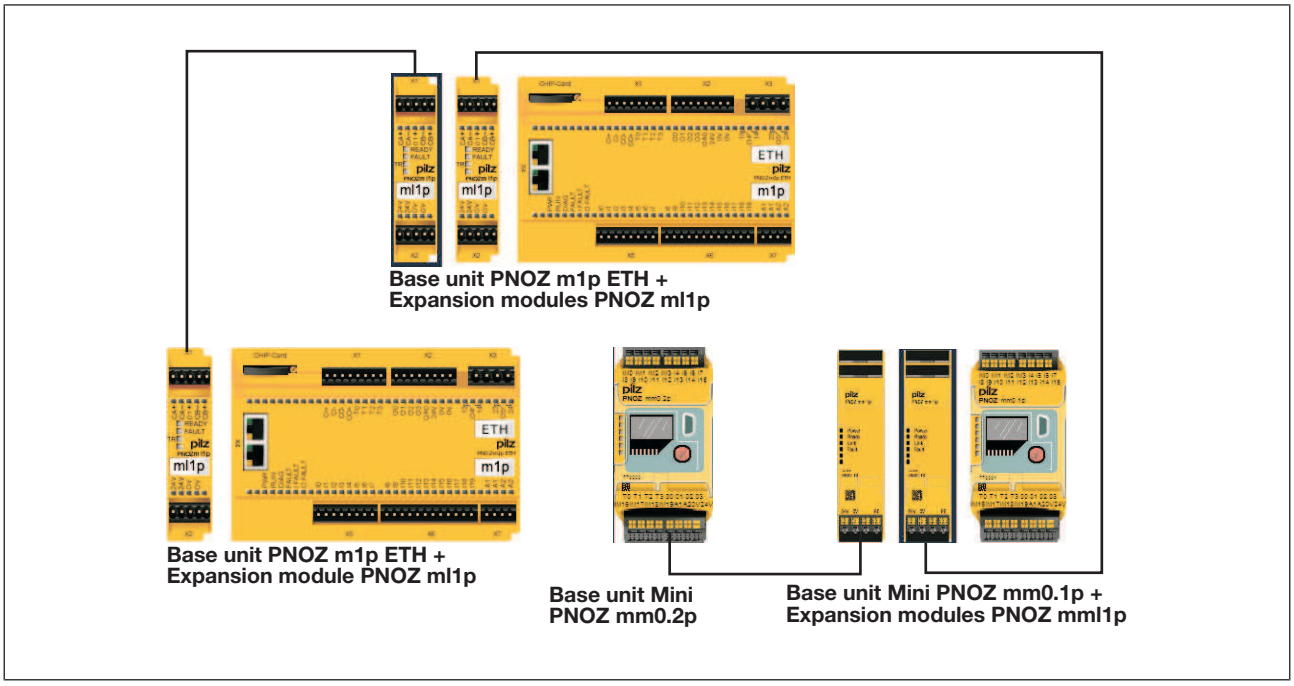

System expansion
Connection of multiple PNOZmulti systems

Connection options

	PNOZ m B0, PNOZ m B1 +PNOZ m EF Multi Link	PNOZ m0p/1p/2p/3p (ETH) +PNOZ ml1p	PNOZ mm0p	PNOZ mm0.1p +PNOZ mml1p	PNOZ mm0.2p
PNOZ m B0, PNOZ m B1 +PNOZ m EF Multi Link	x	x		x	x
PNOZ m0p/1p/2p/3p (ETH) +PNOZ ml1p	x	x		x	x
PNOZ mm0p					
PNOZ mm0.1p + PNOZ mml1p	x	x		x	x
PNOZ mm0.2p	x	x		x	x

System expansion
Connection of multiple PNOZmulti systems

Connection via SafetyNET p

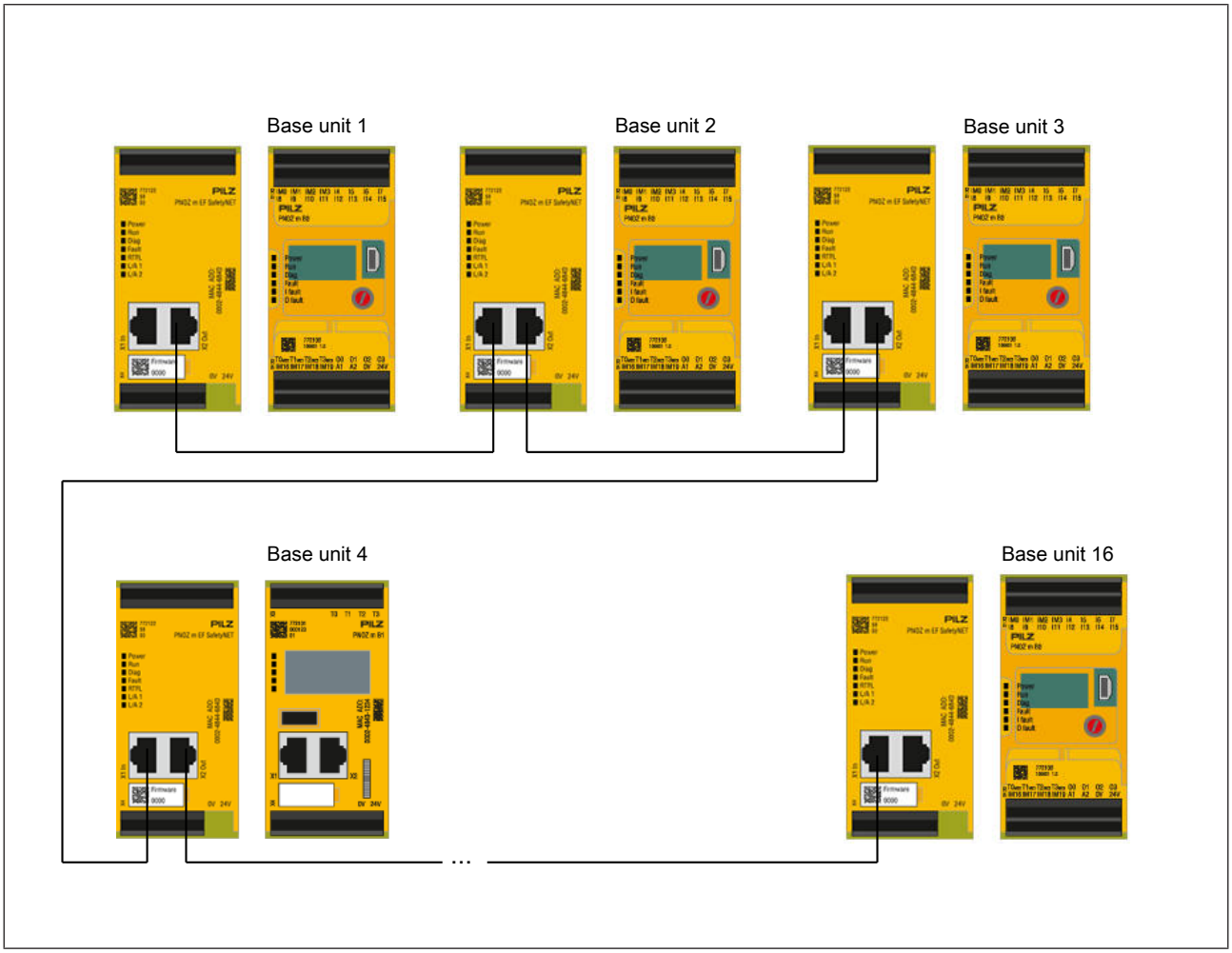

Connection options

	PNOZ m B0, PNOZ m B1 **+ PNOZ m EF SafetyNET**
PNOZ m B0, **PNOZ m B1** **+PNOZ m EF SafetyNET**	**x**

Reaction times of the Multi Link connection

The reaction time when connecting two or more base units is calculated from the transmission delay of the connection at the link module of a communication partner and the input delay at the link module of the connected communication partner.

System expansion
Connection of multiple PNOZmulti systems

Example: Connecting 3 base units PNOZmulti

The maximum reaction time $t_{ReactionMax}$ includes the following times:

- Max. input delay PNOZ m1p (Base 1): 4 ms
- Data transfer time of the connection at the PNOZ ml1p (Base 1): 35 ms
- Max. input delay PNOZ ml1p (Base 2): 0 ms
- Data transfer time of the connection at the PNOZ ml1p (Base 2): 35 ms
- Max. input delay PNOZ ml1p (Base 3): 0 ms
- Max. switch-off delay at the output PNOZ m1p: 30 ms

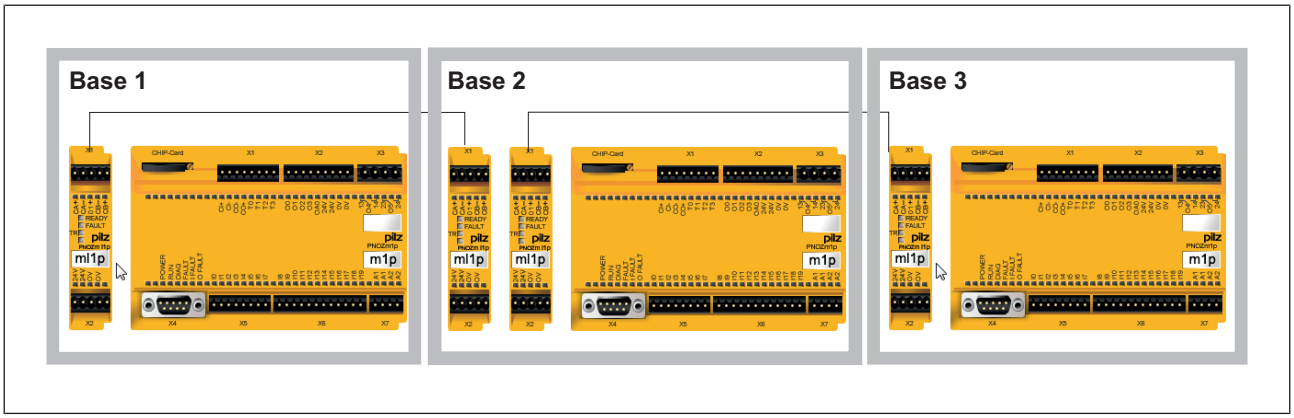

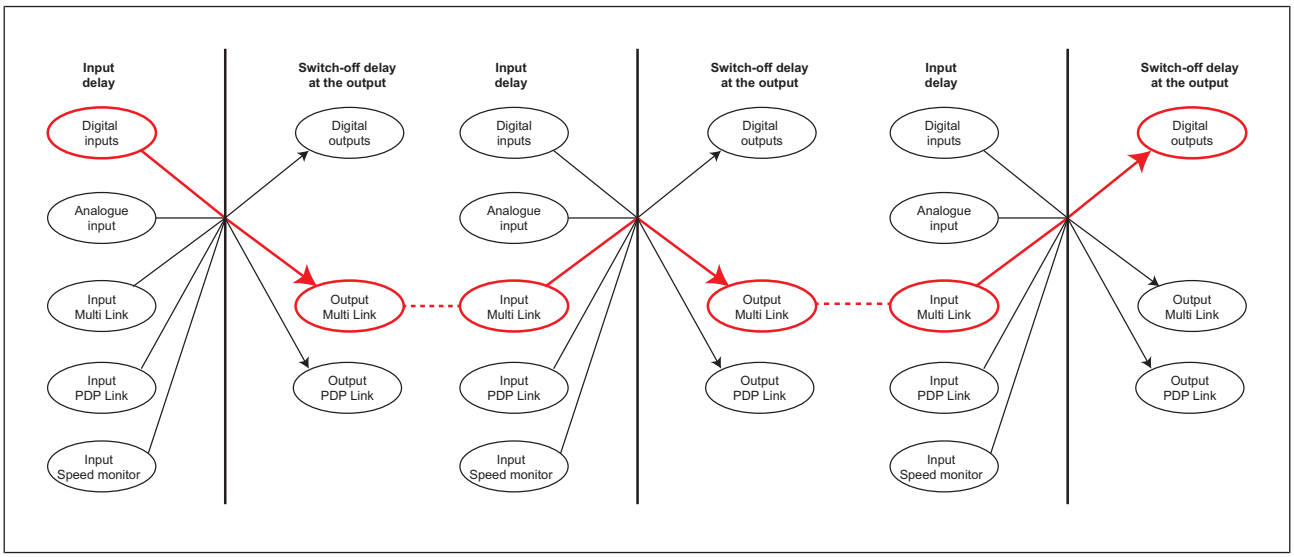

$t_{ReactionMax}$ = **4 ms + 35 ms + 0 ms + 35 ms + 0 ms + 30 ms**

$t_{ReactionMax}$ = **104 ms**

System expansion
Connection of multiple PNOZmulti systems

Example: Connecting 5 base units PNOZmulti

The maximum reaction time $t_{ReactionMax}$ includes the following times:

- Max. input delay PNOZ mm0.1p (Base 1): 4 ms
- Data transfer time of the connection at the PNOZ mml1p (Base 1): 35 ms
- Max. input delay PNOZ mml1p (Base 2): 0 ms
- Data transfer time of the connection at the PNOZ mml1p (Base 2): 35 ms
- Max. input delay PNOZ mml1p (Base 2): 0 ms
- Data transfer time of the connection at the PNOZ ml1p (Base 4): 35 ms
- Max. input delay PNOZ m EF Multi Link (Base 5): 0 ms
- Max. processing time PNOZ m B0 (Base 5): 30 ms
- Max. switch-off delay at the output PNOZ m B0 (Base 5): 1 ms

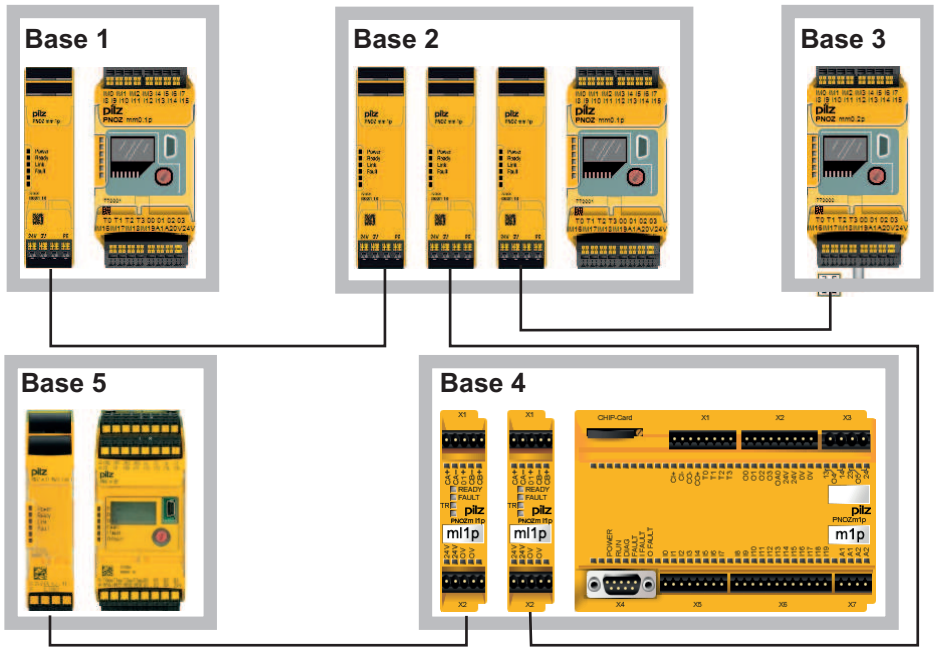

System expansion
Connection of multiple PNOZmulti systems

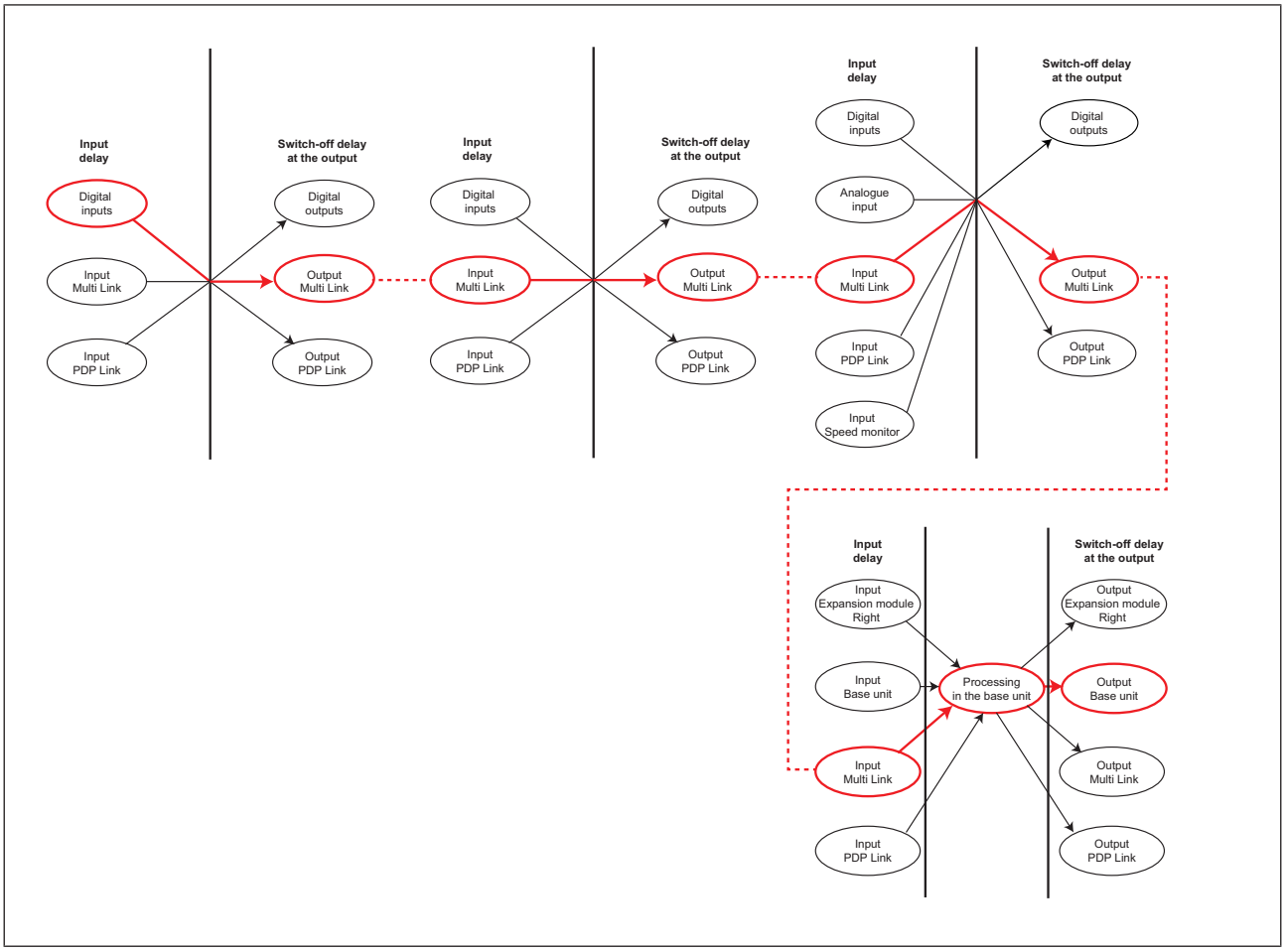

$t_{ReactionMax}$ = **4 ms + 35 ms + 0 ms + 35 ms + 0 ms + 35 ms + 0 ms 30 ms + 1 ms**

$t_{ReactionMax}$ = **140 ms**

System expansion
Connection of multiple PNOZmulti systems

Reaction times of the connection via SafetyNET p

The reaction time with the SafetyNET p connection of two base units is calculated from the delay of the input and output modules, the processing time of the two base units and the input and output delay of the PNOZ m EF SafetyNET module.

Example configuration: Reaction time of PNOZ m EF 8DI4DO of Base 1 to output PNOZ m EF 8DI4DO of Base 3

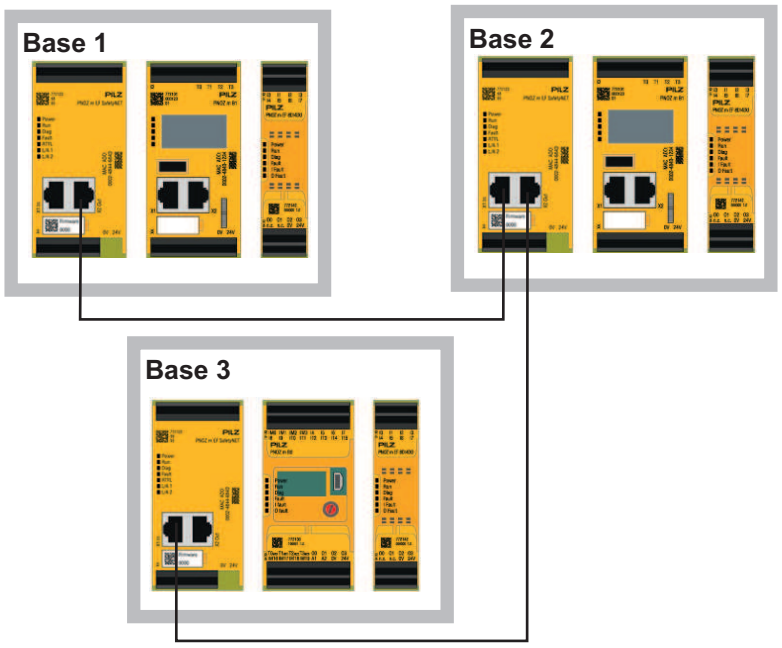

Input PNOZ m EF 8DI4DO (Base 1) Input delay Max	Processing in main program Processing Max	Output PNOZ m EF SafetyNET (Base 1) Connection's transmission delay	Input PNOZ m EF SafetyNET (Base 3) Input delay. Max	Processing in the main program Processing Max	Output PNOZ m EF 8DI4DO (Base 3) Switch-off delay
8 ms	30 ms	25 ms	0 ms	30 ms	3 ms

System expansion
Connection of multiple PNOZmulti systems

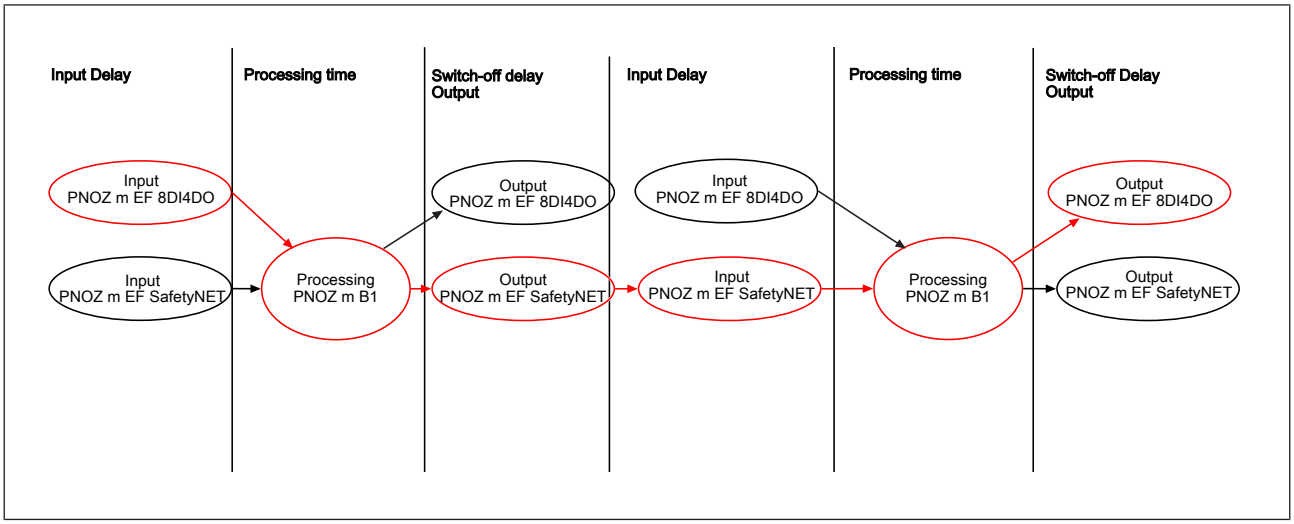

$t_{ReactionMax}$ = 8 ms + 30 ms + 25 ms + 0 ms + 30 ms + 3 ms

$t_{ReactionMax}$ = 96 ms

System expansion
Connection via the cascading inputs and outputs

To connect base units from the safety systems PNOZmulti via the cascading inputs and outputs, please refer to the PNOZmulti Installation Manual.

Contents	Page
Configurable safety systems PNOZmulti	64
Configurable compact controllers PNOZmulti Mini	69
Configurable control systems PNOZmulti 2	72

Configurable safety systems PNOZmulti
Base units

Type	Order number	Features	Common features
PNOZ m0p PNOZ m0p ETH	773 110 773 113	**Base unit** From 3 … 6 safety functions Only 1 link module and fieldbus module each can be connected, no other expansion modules can be used, From 3 … 6 safety functions	To connect emergency stop devices, two-hand pushbuttons, safety gate limit switches, light beam devices, scanners, enabling switches, safety gate switches PSEN, operating mode selector switches, muting, safety mats, sensors, for example Can be configured in the PNOZmulti Configurator Exchangeable program memory Diagnostic interface 1 fieldbus module can be connected PNOZ m1p, PNOZ m2p, PNOZ m3p: Max. 8 expansion modules can be connected 20 safe inputs Semiconductor outputs: – 4 safety outputs Depending on the application, up to PL e of EN ISO 13849-1 and up to SIL CL 3 of EN IEC 62061 – 1 output for standard applications Positive-guided relay outputs: – 2 safety outputs Depending on the application, up to PL e of EN ISO 13849-1 and up to SIL CL 3 of EN IEC 62061 4 test pulse outputs 1 cascading input and output; can also be used as a standard output LED for fault, diagnostics, supply voltage, input and output circuits Plug-in connection terminals: either spring-loaded or screw terminals (available as accessory) Dimensions (H x B x T): 94 x 135 x 121 mm
PNOZ m1p PNOZ m1p ETH PNOZ m1p coated version PNOZ m1p ETH coated version	772 001	**Base unit** Modular and expandable, max. 8 expansion modules and 1 fieldbus module can be connected From 4 safety functions and automation functions	
PNOZ m2p PNOZ m2p ETH	772 002	**Base unit - specifically for press applications** Monitoring of operating modes such as set-up mode, single-stroke and automatic, safety light curtains in single-break and double-break mode, rotary cam arrangement with run monitoring, press safety valves Modular and expandable as PNOZ m1p	
PNOZ m3p PNOZ m3p ETH	773 125 773 126	**Base unit - specifically for burner management:** Control and monitoring of furnaces, e.g. monitoring of safety sequences, combustion air pressure, ignition, flame, external compound controller and tightness control; plus control of safety valves, ignition valves, exhaust valves, ignition, external compound controller and combustion air blower Modular and expandable as PNOZ m1p	

Please refer to the section entitled System expansion [30] for details of the number and type of connectable expansion modules for the expandable base units.

Configurable safety systems PNOZmulti
Expansion modules

Type	Order number	Application area	Features
Analogue input modules			
PNOZ ma1p PNOZ ma1p coated version	773 812 773 813	Safe analogue input module	▸ 2 safe analogue inputs for current or voltage measurement ▸ Each input can be configured separately ▸ Voltage range: -10.24 ... +10.2375 V ▸ Current range: 0 ... 25.59 mA ▸ Resolution – Voltage measurement: 13 Bit (signed 12 Bit) – Current measurement: 12 Bit ▸ Range monitoring to monitor for wiring errors or errors in the sensor (4 range limits can be configured) ▸ Threshold value monitoring to monitor process variables (8 threshold values can be configured) ▸ Exact analogue value can be passed to a fieldbus for diagnostic purposes ▸ Status indicators ▸ Coated version: For increased environmental requirements
Link modules			
PNOZ ml1p PNOZ ml1p coated version	773 540 773 545	For safe connection of two PNOZmulti base units	▸ Point-to-point connection via 4-core shielded and twisted-pair cable ▸ 32 virtual inputs and 32 virtual outputs ▸ Status indicators ▸ Coated version: For increased environmental requirements
PNOZ ml2p	773 602	For safe connection of one base unit with up to 4 decentralised modules PDP67 (see below)	▸ Max. 4 decentralised modules PDP67 F 8DI ION can be connected to the link module PNOZ ml2p ▸ Status indicators
Decentralised modules (not included in this catalogue)			
PDP67 F 8DI ION	773 600	Decentralised safe input module IP67	▸ Protection type IP67 ▸ 8 inputs for connecting 8 single-channel or 4 dual-channel sensors ▸ 8 outputs, which can be configured as – Standard outputs – Test pulse outputs – 24 V outputs ▸ Status indicators

Configurable safety systems PNOZmulti
Expansion modules

Type	Order number	Application area	Features
PDP67 F 8DI ION HP	773 601	Decentralised safe input module IP67	▸ Protection type IP67 ▸ 8 inputs for connecting 8 single-channel or 4 dual-channel sensors ▸ 8 outputs, which can be configured as – Standard outputs – Test pulse outputs – 24 V outputs ▸ Separate output supply for applications with higher current consumption ▸ Module is galvanically isolated from CAN bus ▸ Status indicators
Input modules			
PNOZ mi1p PNOZ mi1p coated version	773 400 773 405	Safe input module	▸ 8 safe inputs ▸ Status indicators ▸ Test pulse outputs used to monitor shorts across the inputs ▸ Coated version: For increased environmental requirements
PNOZ mi2p	773 410	Input module	▸ 8 inputs for standard applications ▸ Status indicators
Output modules			
PNOZ mo1p PNOZ mo1p coated version	773 500 773 505	Safe semiconductor output module	▸ 4 safe semiconductor outputs up to PL e of EN ISO 13849-1 and SIL CL 3 of EN IEC 62061, depending on the application ▸ Status indicators ▸ Coated version: For increased environmental requirements
PNOZ mo2p PNOZ mo2p coated version	773 520 773 525	Safe relay output module	▸ 2 safe relay outputs, positive-guided up to PL e of EN ISO 13849-1 and SIL CL 3 of EN IEC 62061, depending on the application ▸ Status indicators ▸ Coated version: For increased environmental requirements
PNOZ mo3p	773 510	Safe semiconductor output module, dual-pole	▸ 4 safe semiconductor outputs, dual-pole, up to PL e of EN ISO 13849-1 and SIL CL 3 of EN IEC 62061, depending on the application ▸ Status indicators
PNOZ mo4p PNOZ mo4p coated version	773 536 773 537	Safe relay output module, volt-free switching of actuators	▸ 4 safe relay outputs, positive-guided up to PL e of EN ISO 13849-1 and SIL CL 3 of EN IEC 62061, depending on the application ▸ Status indicators ▸ Coated version: For increased environmental requirements
PNOZ mo5p	773 534	Safe relay output module to control the safety valves on a burner in accordance with EN 50156	▸ 4 safe relay outputs, positive-guided, diverse Up to PL e of EN ISO 13849-1 and SIL CL 3 of EN IEC 62061, depending on the application ▸ Status indicators

Configurable safety systems PNOZmulti
Expansion modules

Type	Order number	Application area	Features
Output modules for standard applications			
PNOZ mc1p PNOZ mc1p coated version	773 700 773 705	Semiconductor output module for standard applications	▸ 16 semiconductor outputs for standard applications ▸ Status indicators ▸ Coated version: For increased environmental requirements ▸ Status indicators
Speed monitor			
PNOZ ms1p	773 800	To connect ▸ Proximity switches ▸ Incremental encoders Sin/Cos, TTL (5V)	▸ Monitoring of 2 independent axes (8 cutoff frequencies can be set) ▸ Connection per axis: 1 incremental encoder or 2 proximity switches or one of each ▸ Measured variables: – Standstill – Speed (8 values can be set) – Direction of rotation ▸ Encoder types can be selected in the PNOZmulti Configurator ▸ Proximity detectors are connected directly to the terminals ▸ Status indicators
PNOZ ms2p HTL	773 815	To connect ▸ Proximity switches ▸ Incremental encoders HTL (24 V)	
PNOZ ms2p TTL PNOZ ms2p TTL coated version	773 816 773 811	To connect ▸ Proximity switches ▸ Incremental encoders Sin/Cos, TTL (5V)	
PNOZ ms3p	773 820	To connect ▸ Incremental encoders Sin/Cos, TTL (5V), HTL (24 V)	▸ Monitoring of 2 independent axes (8 cutoff frequencies can be set) ▸ Connection per axis: 1 incremental encoder ▸ Measured variables: – Standstill – Speed (8 values can be set) – Direction of rotation ▸ Encoder types can be selected in the PNOZmulti Configurator ▸ Function to deactivate speed monitoring ▸ Status indicators
PNOZ ms3p HTL	773 825	To connect Incremental encoders HTL (24 V)	
PNOZ ms3p TTL	773 826	To connect ▸ Incremental encoders Sin/Cos, TTL (5V)	
PNOZ ms4p	773 830	To connect ▸ Incremental encoders Sin/Cos, TTL (5V), HTL (24 V)	▸ Monitoring of 1 axis ▸ Connection per axis: 1 incremental encoder ▸ Measured variables: – Standstill – Speed (16 values can be set) – Direction of rotation ▸ Function to deactivate speed monitoring ▸ Encoder types can be selected in the PNOZmulti Configurator ▸ Status indicators

Configurable safety systems PNOZmulti
Expansion modules

Type	Order number	Application area	Features
Fieldbus modules			
PNOZ mc0p	773 720	Power supply to supply voltage to fieldbus modules	
PNOZ mc2.1p	773 713	EtherCAT (DS301 V4.02 compliant)	
PNOZ mc3p	773 732	PROFIBUS-DP	
PNOZ mc4p PNOZ mc4p coated version	773 711 773 729	DeviceNet	
PNOZ mc5p	773 723	Interbus	
PNOZ mc5.1p	773 728	Interbus fibre-optic cable	
PNOZ mc6p PNOZ mc6p coated version	773 712 773 727	CANopen	
PNOZ mc6.1p	773 733	CANopen	
PNOZ mc7p PNOZ mc7p coated version	773 726 773 725	CC-Link	
PNOZ mc8p PNOZ mc8p coated version	773 730 773 734	Ethernet IP/Modbus TCP	
PNOZ mc9p	773 731	Profinet	
PNOZ mc10p	773 715	sercos III	
PNOZ mc12p	773 719	Ethernet POWERLINK	

Please refer to the section entitled System expansion [30] for details of the number of connectable expansion modules and the slot.

Configurable compact controllers PNOZmulti Mini
Expansion modules

Type	Order number	Features	Common features
PNOZ mm0p PNOZ mm0p-T	772 000 772 010	**Base unit** From 3 … 6 safety functions Not modular and expandable	• To connect emergency stop devices, two-hand pushbuttons, safety gate limit switches, light beam devices, scanners, enabling switches, safety gate switches PSEN, operating mode selector switches, muting, safety mats, sensors, for example • Can be configured in the PNOZmulti Configurator • Exchangeable program memory • 20 safe inputs, up to 8 of which can be configured as outputs for standard applications • 4 safe semiconductor outputs up to PL e, SIL CL 3 • 4 semiconductor outputs, can be configured as outputs for standard applications or as test pulses • Display for error messages, state of the supply voltage, state of the inputs and outputs, status and device information. Customised texts can be displayed • Rotary knob for menu control • Plug-in connection terminals: either spring-loaded or screw terminals (available as accessory) • Dimensions (H x B x T): 100 x 45 x 120 mm
PNOZ mm0.1p	772 001	**Base unit** From 4 safety functions and for standard control functions • Expansion modules PNOZsigma can be connected • 1 link module or communication module can be connected • 1 fieldbus module can be connected • Decentralisation: PDP67 modules can be connected to connect sensor technology • Expanded diagnostics PVIS From 4 safety functions and for standard control functions	
PNOZ mm0.2p	772 002	**Base unit** As PNOZ mm0.1p, with additional integrated Multi-Link interface	

Please refer to the section entitled System expansion [30] for details of the number and type of connectable expansion modules for the expandable base units.

Type	Order number	Application area	Features
Link modules			
PNOZ mml1p	772 020	For safe connection of two PNOZmulti base units	• Point-to-point connection via 4-core shielded and twisted-pair cable • 32 virtual inputs and 32 virtual outputs • Status indicators
PNOZ mml2p	772 020	For safe connection of one base unit with up to 4 decentralised modules PDP67 (see below)	• Max. 4 decentralised modules PDP67 F 8DI ION can be connected to the link module PNOZ mml2p • Status indicators
Decentralised modules (not included in this catalogue)			
PDP67 F 8DI ION	773 600	Decentralised safe input module IP67	• Protection type IP67 • 8 inputs for connecting 8 single-channel or 4 dual-channel sensors • 8 outputs, which can be configured as – Standard outputs – Test pulse outputs – 24 V outputs • Status indicators

Configurable compact controllers PNOZmulti Mini
Expansion modules

Type	Order number	Application area	Features
PDP67 F 8DI ION HP	773 601	Decentralised safe input module IP67	▸ Protection type IP67 ▸ 8 inputs for connecting 8 single-channel or 4 dual-channel sensors ▸ 8 outputs, which can be configured as – Standard outputs – Test pulse outputs – 24 V outputs ▸ Separate output supply for applications with higher current consumption ▸ Module is galvanically isolated from CAN bus ▸ Status indicators
Communication modules			
PNOZ mmc1p	772 030	Communication module with Ethernet interfaces (TCP/IP, Modbus/TCP)	▸ 2 Ethernet interfaces ▸ Status indicators
PNOZ mmc2p	772 031	Communication module with serial interface RS232	▸ 1 serial interface RS232 ▸ Status indicators
Fieldbus modules			
PNOZ mmc3p	772 032	Fieldbus module PROFIBUS DP	▸ Connection for PROFIBUS DP ▸ Station addresses from 0 ... 99, selected via rotary switch ▸ Status indicators
PNOZ mmc4p	772 033	Fieldbus module DeviceNet	▸ Connection for DeviceNet ▸ Station addresses from 0 ... 63 using DIP switch(es) ▸ Status indicators
PNOZ mmc6p	772 034	Fieldbus module CANopen	▸ Connection for CANopen ▸ Station addresses from 0 ... 99, selected via rotary switch ▸ Transmission rate selected via rotary switch (1 MBit/s, 10 kbit/s, 125 kBit/s, 20 kbit/s, 250 kBit/s, 50 kbit/s, 500 kBit/s, 800 kbit/s) ▸ Status indicators
PNOZ mmc7p	772 035	Fieldbus module CC-Link	▸ Connection for CC-Link ▸ Station addresses from 1 ... 63, selected via rotary switch ▸ Station type: Remote Device ▸ Occupied stations: 2 ▸ Status indicators

Configurable compact controllers PNOZmulti Mini
Expansion modules

Type	Order number	Application area	Features
PNOZ mmc11p	772 036	Fieldbus module EtherCAT	▸ Connection for EtherCAT ▸ Network protocols: EtherCAT ▸ Supports CANopen over EtherCAT (DS301 V4.02 compliant) ▸ Status indicators
PNOZ mmc12p	772 019	Fieldbus module Ethernet POWERLINK	▸ Connection for Ethernet POWERLINK (Ethernet POWERLINK V 2 protocol) ▸ Station addresses from 1 ... 239, selected via rotary switch ▸ The minimum cycle time for an application of 20 Byte Output and 20 Byte Input is 250µs. The minimum cycle time is 450 µs at the maximum PDO size of 254 Byte Input and 20 Byte Output (the inputs and outputs in this case are viewed from the Managing Node). ▸ Status indicators
PNOZsigma output modules (not included in this catalogue)			
PNOZ s7	751 107 750 107	1 safe relay output	Relay output modules for PNOZsigma product range (see Technical Catalogue PNOZ)
PNOZ s7.1	751 167 750 167	1 safe relay output (+ 1 PNOZ s7, PNOZ s10 or PNOZ s11 can be connected as a contact expansion module)	
PNOZ s7.2	751 177 750 177	1 safe relay output (+ 1 expansion module PNOZ s7, PNOZ s10 or PNOZ s11 can be connected)	
PNOZ s10	751 110 750 110	1 safe relay output	
PNOZ s11	751 111 750 111	8 safe relay outputs	
PNOZ s20	751 160 750 160	2 semiconductor outputs for standard applications	
PNOZ s22	751 132 750 132	2 safe relay outputs	

Please refer to the section entitled System expansion [📖 30] for details of the number of connectable expansion modules and the slot.

Configurable control systems PNOZmulti 2
Base units

Type	Order number	Features	Common features
PNOZ m B0	772 100	**Base unit** ▸ 20 safe inputs, up to 8 of which can be configured as outputs for standard applications ▸ 4 safe semiconductor outputs up to PL e, SIL CL 3 ▸ 4 semiconductor outputs, can be configured as outputs for standard applications or as test pulses ▸ Display for error messages, state of the supply voltage, state of the inputs and outputs, status and device information. Customised texts can be displayed ▸ Rotary knob for menu control ▸ Max. 6 expansion modules can be connected ▸ 1 link module or communication module can be connected ▸ Exchangeable program memory ▸ LED for fault, diagnostics, supply voltage, input and output circuits ▸ Dimensions (H x B x T): 101.4 x 45 x 120 mm	▸ Efficient from 4 safety functions upwards ▸ Support for module programs (mIQ) ▸ To connect emergency stop devices, two-hand pushbuttons, safety gate limit switches, light beam devices, scanners, enabling switches, safety gate switches PSEN, operating mode selector switches, muting, safety mats, sensors, for example ▸ 1 fieldbus module can be connected ▸ Can be configured in the PNOZmulti Configurator ▸ Exchangeable program memory (USB memory) ▸ Diagnostic interface ▸ Plug-in connection terminals: either spring-loaded or screw terminals (available as accessory)
PNOZ m B1	772 101	**Base unit** ▸ 4 test pulse outputs to detect shorts between the inputs ▸ Display for error messages, state of the supply voltage, state of the inputs and outputs, status and device information, Ethernet settings, system date and time, stop and start device ▸ Multifunction switch for menu control ▸ Maximum number of expansion modules: – Right-hand up to 12 safe expansion modules, additionally 1 output module for standard applications – Left-hand up to 4 safe expansion modules, 1 fieldbus module ▸ Exchangeable program memory USB memory (512 Byte, supplied with the device): Several projects can be saved, only one can be executed, managed via the Project Manager ▸ Larger programs in the PNOZmulti Configurator: Up to 1024 connection lines are possible ▸ Date and time of the system can be set in the PNOZmulti Configurator ▸ LED display for fault, diagnostics, supply voltage ▸ Dimensions (H x B x T): 120.2 x 45 x 98 mm	
PNOZ m B1 Burner	772 102	**Base unit specifically for burner management:** Control and monitoring of furnaces, e.g. monitoring of safety sequences, combustion air pressure, ignition, flame, external compound controller and tightness control; plus control of safety valves, ignition valves, exhaust valves, ignition, external compound controller and combustion air blower Other features as PNOZ m B1	

Please refer to the section entitled System expansion [30] for details of expansion modules that can be connected for the expandable base units.

Configurable control systems PNOZmulti 2
Expansion modules

Type	Order number	Application area	Features
Link modules			
PNOZ m EF Multi Link	772 120	For safe connection of two PNOZmulti base units	▸ Point-to-point connection via 4-core shielded and twisted-pair cable ▸ 32 virtual inputs and 32 virtual outputs ▸ Status indicators
PNOZ m EF PDP Link	772 121	For safe connection of one base unit with up to 4 decentralised modules PDP67 (see below)	▸ Max. 4 decentralised modules PDP67 F 8DI ION can be connected to the link module PNOZ mml2p ▸ Status indicators
Decentralised modules (not included in this catalogue)			
PDP67 F 8DI ION	773 600	Decentralised safe input module IP67	▸ Protection type IP67 ▸ 8 inputs for connecting 8 single-channel or 4 dual-channel sensors ▸ 8 outputs, which can be configured as – Standard outputs – Test pulse outputs – 24 V outputs ▸ Status indicators
PDP67 F 8DI ION HP	773 601	Decentralised safe input module IP67	▸ Protection type IP67 ▸ 8 inputs for connecting 8 single-channel or 4 dual-channel sensors ▸ 8 outputs, which can be configured as – Standard outputs – Test pulse outputs – 24 V outputs ▸ Separate output supply for applications with higher current consumption ▸ Module is galvanically isolated from CAN bus ▸ Status indicators
Input module			
PNOZ EF 16DI	772 140	Safe input module	▸ 16 safe inputs ▸ Test pulse outputs used to monitor shorts across the inputs ▸ Status indicators
Input and output modules			
PNOZ EF 8DI4DO	772 142	Safe input and output module	▸ 8 safe inputs ▸ 4 safe, dual-pole semiconductor outputs up to PL e of EN ISO 13849-1 and SIL CL 3 of EN IEC 62061, depending on the application ▸ Status indicators

Configurable control systems PNOZmulti 2
Expansion modules

Type	Order number	Application area	Features
PNOZ m EF 8DI2DOT	772 144	Safe input and output module	▸ 8 safe inputs ▸ 2 safe semiconductor outputs up to PL e of EN ISO 13849-1 and SIL CL 3 of EN IEC 62061, depending on the application. The outputs are suitable for controlling a press safety valve in accordance with EN 692. ▸ Status indicators
PNOZ EF 4DI4DOR	772 143	Safe input and output module	▸ 8 safe inputs ▸ 2 safe relay outputs, positive-guided up to PL e of EN ISO 13849-1 and SIL CL 3 of EN IEC 62061, depending on the application ▸ Status indicators
PNOZ m EF 4DI 4DORD	772 145	Safe input and output module	▸ 8 safe inputs ▸ 2 safe, diverse relay outputs, positive-guided up to PL e of EN ISO 13849-1 and SIL CL 3 of EN IEC 62061, depending on the application suitable for controlling the safety valves of a burner in accordance with DIN EN 50156. ▸ Status indicators
Output modules			
PNOZ m ES 14DO	772 181	Output module for standard applications	▸ 14 outputs for standard applications
Motion monitoring modules			
PNOZ m EF 1MM	772 170	Monitoring of 1 axis	▸ Monitoring of 1 axis ▸ Measured value recorded by proximity switch and encoder ▸ Monitoring functions – Safe speed monitoring (SSM) – Safe speed range monitoring (SSR-M) – Safe direction of movement monitoring (SDI-M) – Safe operating stop monitoring (SOS-M) – Analogue voltage (track S) ▸ Status indicators

Configurable control systems PNOZmulti 2
Expansion modules

Type	Order number	Application area	Features
PNOZ m EF 1MM2DO	772 172	Monitoring of 1 axis	▸ Monitoring of 1 axis ▸ Measured value recorded by proximity switch and encoder ▸ 2 safe semiconductor outputs up to PL e of EN ISO 13849-1 and SIL CL 3 of EN IEC 62061, depending on the application ▸ 1 semiconductor output for standard applications ▸ Monitoring functions – Safe speed monitoring (SSM) – Safe speed range monitoring (SSR-M) – Safe direction of movement monitoring (SDI-M) – Safe operating stop monitoring (SOS-M) – Analogue voltage (track S) ▸ Status indicators
PNOZ m EF 2MM	772 171	Monitoring of 2 axes	▸ Monitoring of 2 independent axes ▸ Measured value recorded by proximity switch and encoder ▸ Monitoring functions – Safe speed monitoring (SSM) – Safe speed range monitoring (SSR-M) – Safe direction of movement monitoring (SDI-M) – Safe operating stop monitoring (SOS-M) – Analogue voltage (track S) ▸ Status indicators
Communication modules			
PNOZ m ES ETH	772 130	Communication module with Ethernet interfaces (TCP/IP, Modbus/TCP)	▸ 2 Ethernet interfaces ▸ Status indicators
PNOZ m ES RS232	772 131	Communication module with serial interface RS232	▸ 1 serial interface RS232 ▸ Status indicators
Fieldbus modules			
PNOZ m ES Profibus	772 132	Fieldbus module PROFIBUS DP	▸ Connection for PROFIBUS DP ▸ Station addresses from 0 ... 99, selected via rotary switch ▸ Status indicators

Configurable control systems PNOZmulti 2
Expansion modules

Type	Order number	Application area	Features
PNOZ m ES CANopen	772 134	Fieldbus module CANopen	▸ Connection for CANopen ▸ Station addresses from 0 ... 99, selected via rotary switch ▸ Transmission rate selected via rotary switch (1 MBit/s, 10 kbit/s, 125 kBit/s, 20 kbit/s, 250 kBit/s, 50 kbit/s, 500 kBit/s, 800 kbit/s) ▸ Status indicators
PNOZ m ES EtherCAT	772 136	Fieldbus module EtherCAT	▸ Connection for EtherCAT ▸ Network protocols: EtherCAT ▸ Supports CANopen over EtherCAT (DS301 V4.02 compliant) ▸ Status indicators
PNOZ m ES Powerlink	772 119	Fieldbus module Ethernet POWERLINK	▸ Connection for Ethernet POWERLINK (Ethernet POWERLINK V 2 protocol) ▸ Station addresses from 1 ... 239, selected via rotary switch ▸ The minimum cycle time for an application of 20 Byte Output and 20 Byte Input is 250µs. The minimum cycle time is 450 µs at the maximum PDO size of 254 Byte Input and 20 Byte Output (the inputs and outputs in this case are viewed from the Managing Node). ▸ Status indicators
PNOZ m ES EtherNet/IP	772 137	Fieldbus module EtherNet/IP	▸ Connection for EtherNet/IP ▸ Connection for EtherNet/IP as adapter ▸ Transmission rate 10 MBit/s (10BaseT) and 100 MBit/s (100BaseTX) ▸ Status indicators
PNOZ m ES Profinet	772 138	Fieldbus module PROFINET	▸ Connection for PROFINET ▸ Transmission rate 100 MBit/s (100BaseTX), full and half duplex ▸ Two RJ45 ports ▸ Profinet IO device (V2.2) functions in accordance with Conformance Class C ▸ Supported functions: – RT – IRT – MRP – LLDP ▸ Status indicators
PNOZ m ES CC-Link	772 135	Fieldbus module CC-Link	▸ CC-Link connection ▸ Station addresses from 1 ... 63, selected via rotary switch ▸ Station type: Remote Device ▸ Occupied stations: 3 ▸ Status indicators

Please refer to the section entitled System expansion [30] for details of the number of connectable expansion modules and the slot.

Contents	Page
Base units	79
Input modules	166
Analogue input module	183
Output modules	193
Link modules	259
Speed monitors	284
Fieldbus modules	396

Base units

Base units

Contents	Page
PNOZ m0p	81
PNOZ m1p	101
PNOZ m2p	124
PNOZ m3p	145

Base units
PNOZ m0p

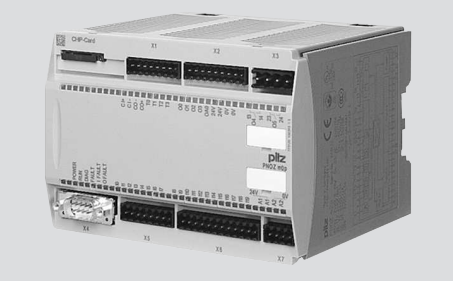

Overview

Unit features

Application of the product PNOZ m0p:

Base unit from the configurable control system PNOZmulti

The product has the following features:

- Can be configured in the PNOZmulti Configurator
- Positive-guided relay outputs:
  - 2 safety outputs
    Depending on the application, up to PL e of EN ISO 13849-1 and up to SIL CL 3 of EN IEC 62061
- Semiconductor outputs:
  - 4 safety outputs
    Depending on the application, up to PL e of EN ISO 13849-1 and up to SIL CL 3 of EN IEC 62061
  - 1 output for standard applications
- 4 test pulse outputs
- 1 cascading input and output;
  can also be used as a standard output
- 20 inputs for connecting, for example:
  - E-STOP pushbuttons
  - Two-hand pushbuttons
  - Safety gate limit switches
  - Start buttons
  - Light beam devices
  - Scanners
  - Enabling switches
  - PSEN
  - Operating mode selector switches

  - Safety mats
- Muting function
- LED indicator for:
  - Diagnostics
  - Supply voltage
  - Output circuits
  - Input circuits
- Test pulse outputs used to monitor shorts across the inputs
- Monitoring of shorts between the safety outputs
- Integrated interfaces:
  - PNOZ m0p: Serial interface RS232
  - PNOZ m0p **ETH**: 2 Ethernet interfaces
- Plug-in connection terminals:
  Either spring-loaded terminal or screw terminal available as an accessory (see Order references for accessories [📖 772]).

Chip card

To be able to use the product you will need a chip card.

Chip cards are available with memories of 8 kByte and 32 kByte. For large-scale projects we recommend the 32 kByte chip card (see Technical Catalogue: Accessories chapter).

Base units
PNOZ m0p

Front view

PNOZ m0p

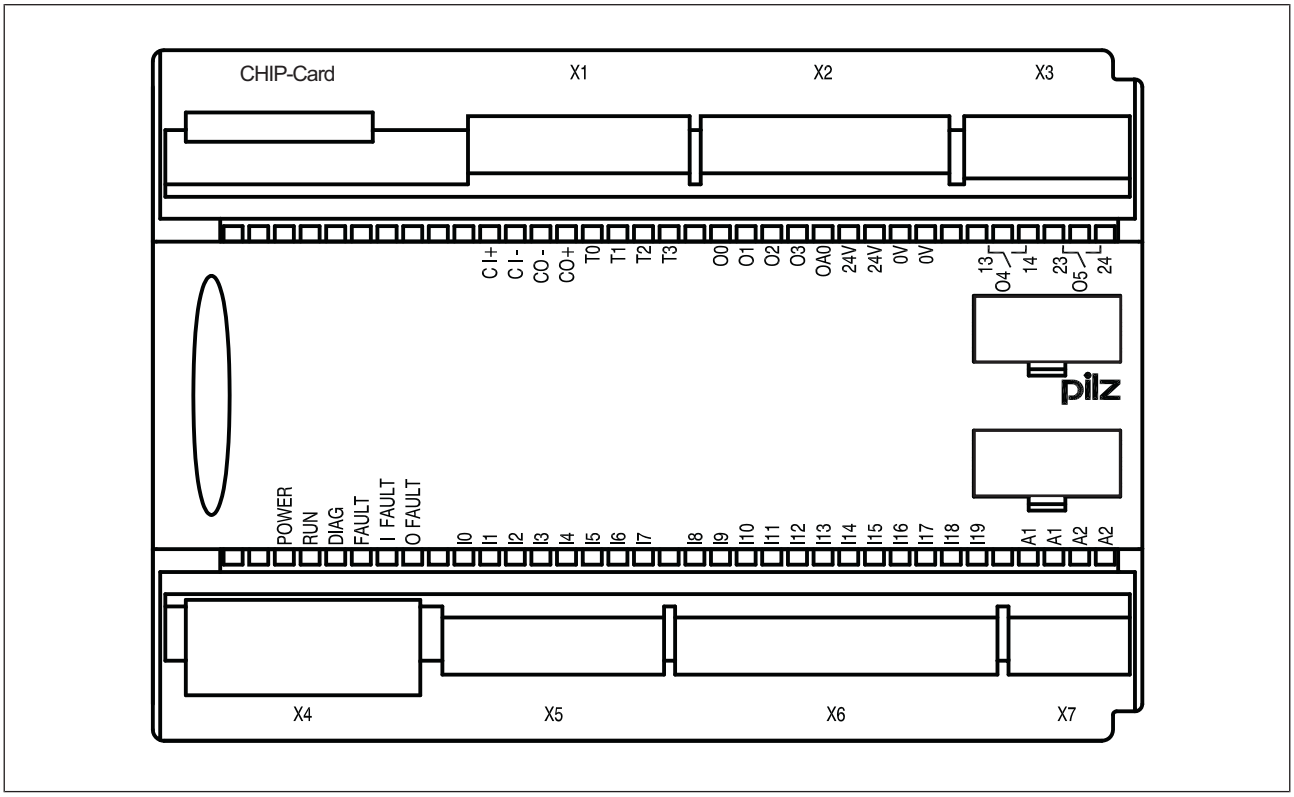

Base units
PNOZ m0p

PNOZ m0p ETH

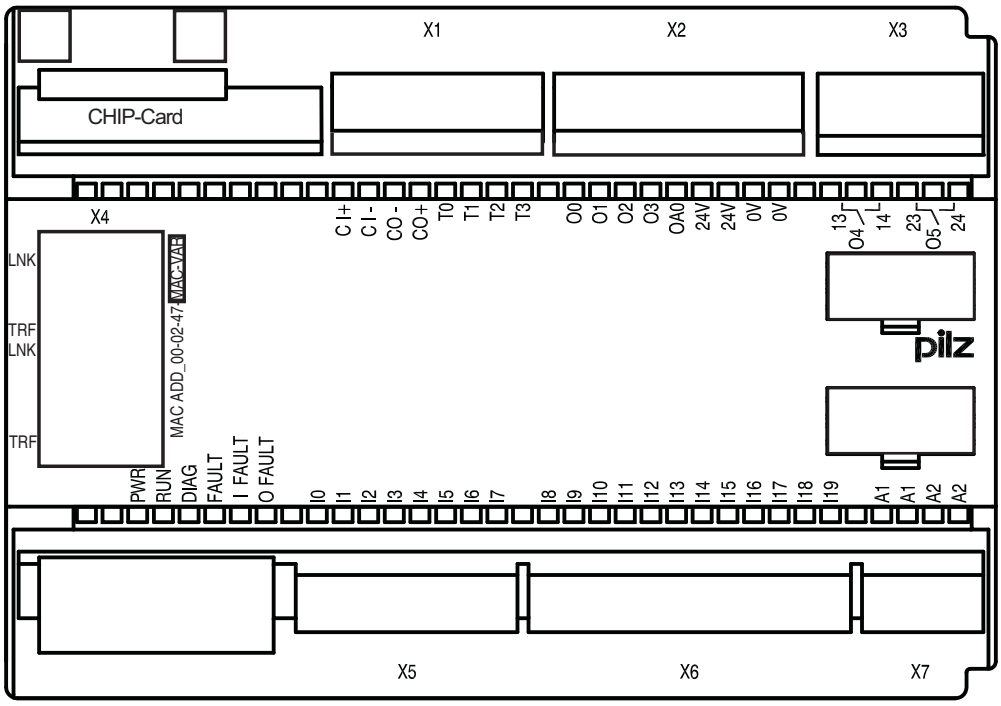

Legend:

CHIP card	Chipkarte interface
X1	Cascading inputs and outputs CI and CO, Test pulse outputs T0 ... T3
X2	Semiconductor outputs O0 ... O3, Auxiliary output OA0, Supply connections
X3	Relay outputs O4 and O5
X4	RS232 interface / Ethernet interface
X5, X6	Inputs I0 ... I19
X7	Power supply
LEDs:	PWR RUN DIAG FAULT I FAULT O FAULT

Base units
PNOZ m0p

Function description

Functions

The function of the inputs and outputs on the control system depends on the safety circuit created using the PNOZmulti Configurator. A chip card is used to download the safety circuit to the base unit. The base unit has 2 microcontrollers that monitor each other. They evaluate the input circuits on the base unit and expansion modules and switch the outputs on the base unit and expansion modules accordingly.

The LEDs on the base unit and expansion modules indicate the status of the configurable control system PNOZmulti.

The online help on the PNOZmulti Configurator contains descriptions of the operating modes and all the functions of the control system, plus connection examples.

Block diagram

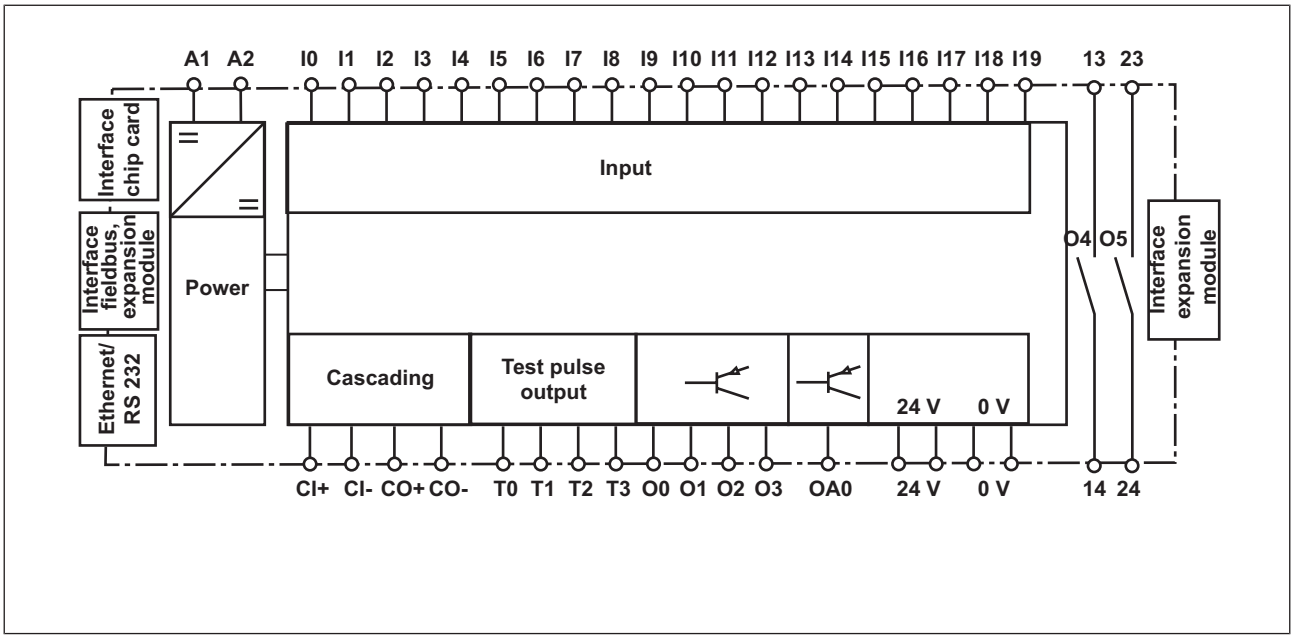

Base units
PNOZ m0p

Installation

Dimensions

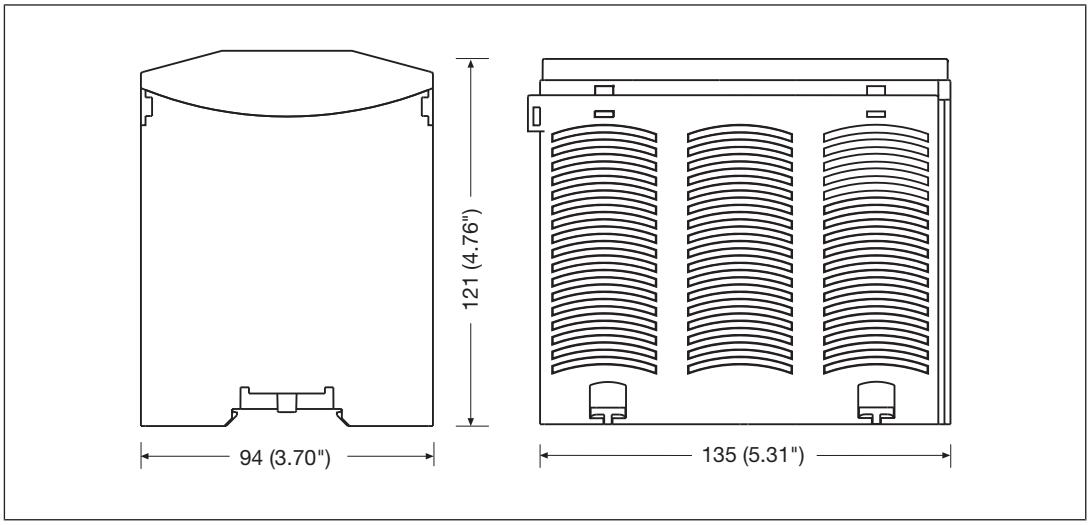

Commissioning

General wiring guidelines

The wiring is defined in the circuit diagram in the Configurator. There you can select the inputs that are to perform a safety function and the outputs that are to switch this safety function.

Please note:

- Information given in the Technical details [📖 91] must be followed.
- Outputs:
  - O0 to O5 are safety outputs
  - O4 and O5 are relay outputs
  - O0 to O3 are semiconductor outputs
  - OA0 is an output to delete a project from the base unit (see online help for the PNOZmutli Configurator).
- To prevent contact welding, a fuse should be connected before the output contacts (see technical details).
- Use copper wiring with a temperature stability of 75°C.
- Adequate protection must be provided on all output contacts with inductive loads.
- The control system and input circuits must always be supplied by a single power supply. The power supply must meet the regulations for extra low voltages with protective separation.

Base units
PNOZ m0p

- Two connection terminals are available for each of the supply connections 24 V and 0 V (semiconductor outputs), plus A1 and A2 (power supply). This means that the supply voltage can be looped through several connections. When the supply voltage is looped, the current at each terminal may not exceed 3 A.
- Test pulse outputs must exclusively be used to test the inputs. They must not be used to drive loads.
  Do not route the test pulse lines together with actuator cables within an unprotected multicore cable.
- Test pulse outputs are also used to supply safety mats that trigger a short circuit.
  Test pulses that are used for the safety mat may not be reused for other purposes.

Connection

Supply voltage	AC	DC
For the safety system (connector X7)	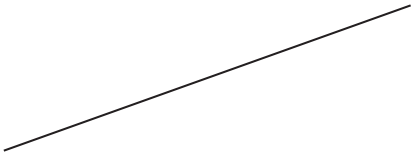	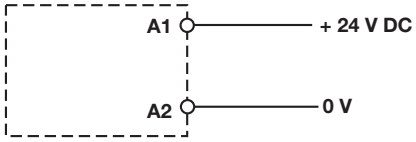
For the semiconductor outputs (connector X2) Must always be present, even if the semiconductor outputs are not used	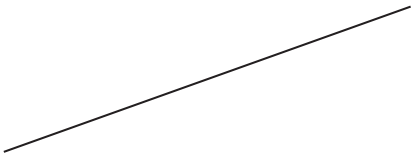	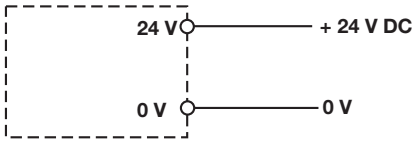

Supply voltage

Input circuit	Single-channel	Dual-channel
E-STOP **without** detection of shorts across contacts	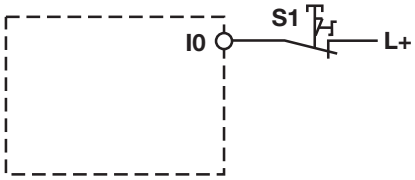	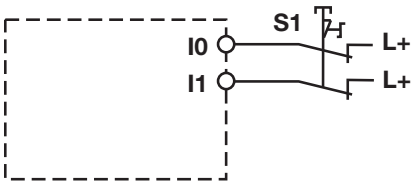
E-STOP **with** detection of shorts across contacts	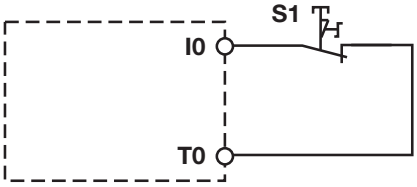	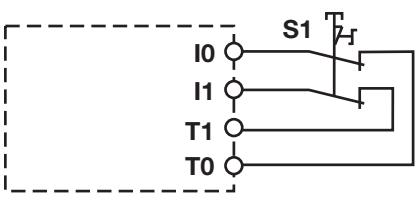

Connection examples for the input circuit

Base units
PNOZ m0p

Start circuit	Input circuit without detection of shorts across contacts	Input circuit with detection of shorts across contacts
	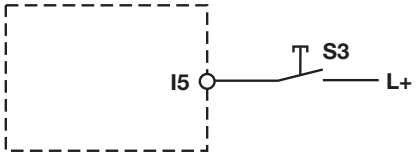	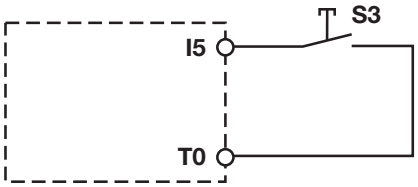

Connection examples for start circuit

Redundant output	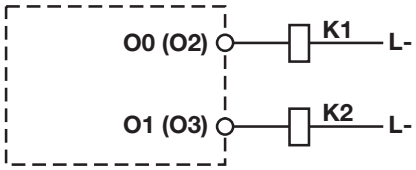	
Single output	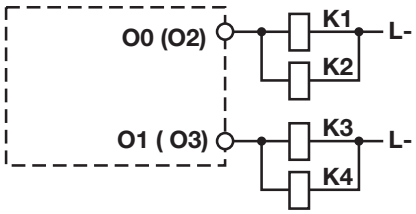	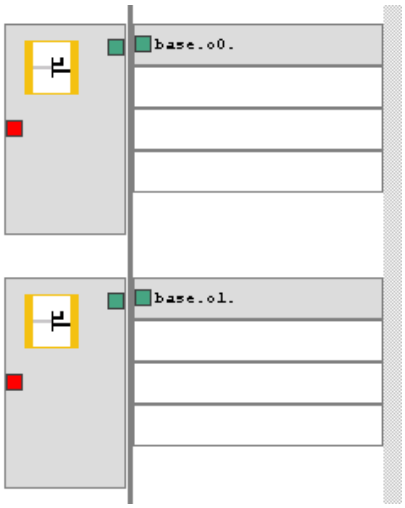

Connection examples for semiconductor outputs

Base units
PNOZ m0p

Redundant output	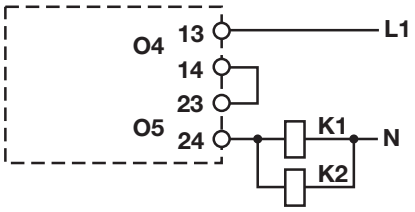	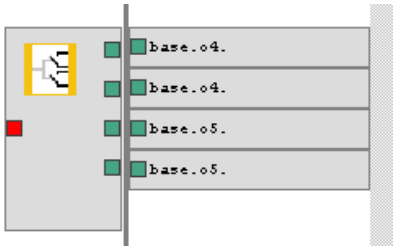
Single output	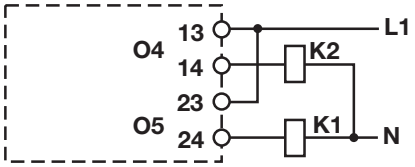	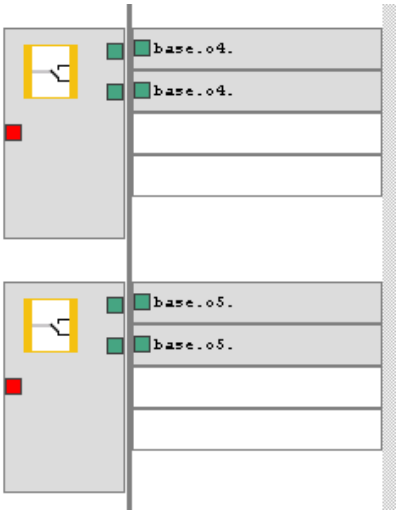

Connection examples for relay outputs

Feedback loop	Redundant output
Contacts from external contactors	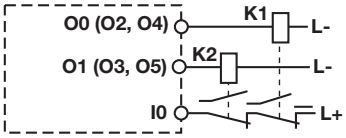 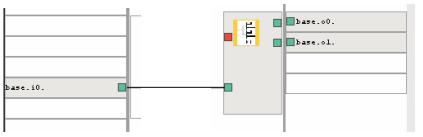

Connection examples for feedback loop

Base units
PNOZ m0p

Connection example

Dual-channel E-STOP and safety gate wiring, monitored start (I17), feedback loop (I14), cascading output as auxiliary output (CO+/A2)

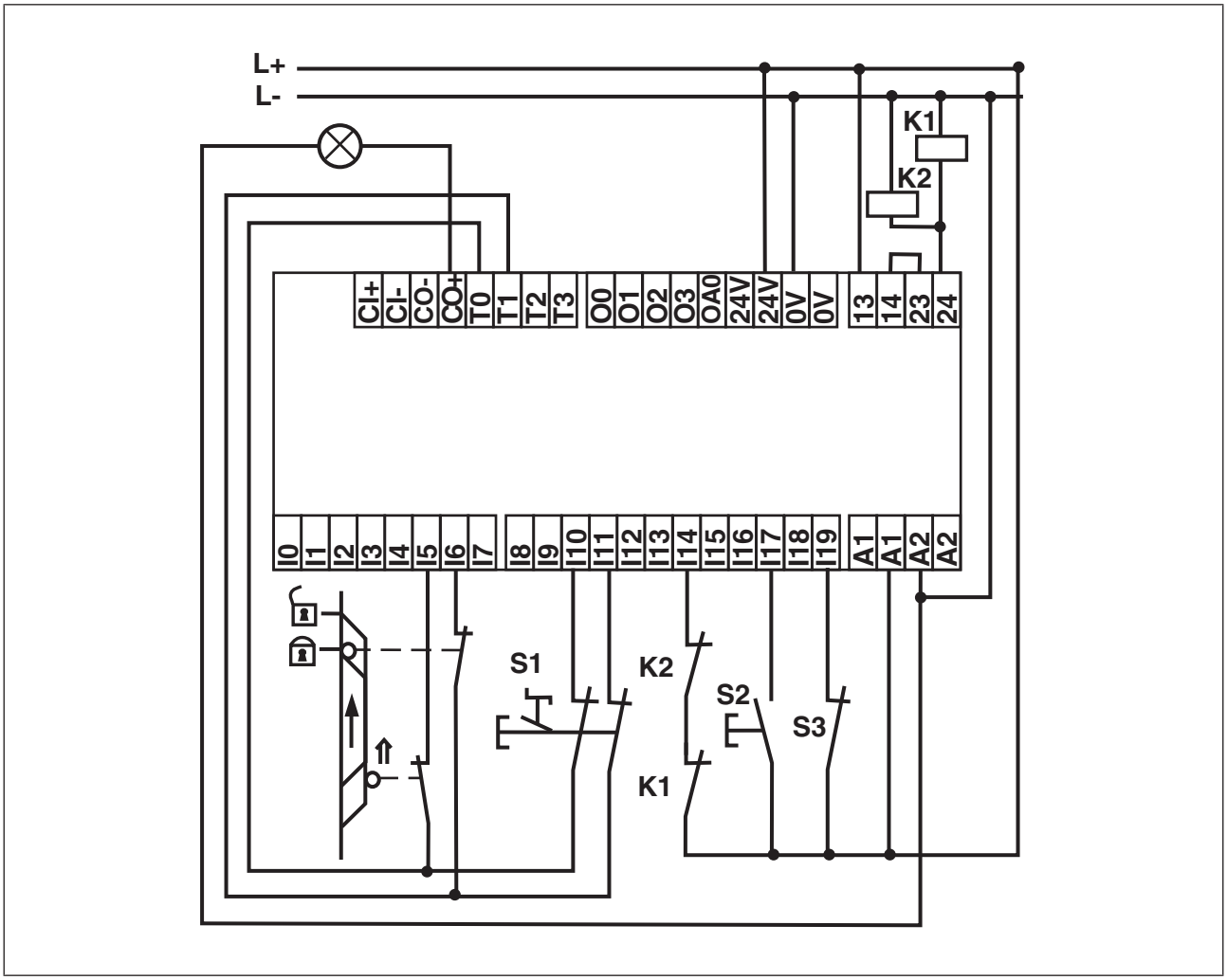

Base units
PNOZ m0p

Technical Details

General	773110	773113
Certifications	BG, CCC, CE, EAC (Eurasian), KCC, KOSHA, TÜV, cULus Listed	BG, CCC, CE, EAC (Eurasian), KCC, TÜV, cULus Listed
Electrical data	**773110**	**773113**
Supply voltage		
for	Supply to the system	Supply to the system
Voltage	24 V	24 V
Kind	DC	DC
Voltage tolerance	-15 %/+20 %	-15 %/+20 %
Output of external power supply (DC) at no load	8 W	9 W
Residual ripple DC	5 %	5 %
Supply voltage		
for	Supply to the SC outputs	Supply to the SC outputs
Voltage	24 V	24 V
Kind	DC	DC
Voltage tolerance	-15 %/+20 %	-15 %/+20 %
Output of external power supply (DC)	192 W	192 W
Residual ripple DC	5 %	5 %
Potential isolation	yes	yes
Status indicator	LED	LED
Inputs	**773110**	**773113**
Number	20	20
Max. number of live inputs within the max. permitted ambient temperature (see "Environmental data")	U_B <= 26,4 V : 20, U_B > 26,4 V : 15	U_B <= 26,4 V : 20, U_B > 26,4 V : 15
Signal level at "0"	-3 - +5 V DC	-3 - +5 V DC
Signal level at "1"	15 - 30 V DC	15 - 30 V DC
Input voltage in accordance with EN 61131-2 Type 1	24 V DC	24 V DC
Input current at rated voltage	8 mA	8 mA
Min. pulse duration	18 ms	18 ms
Pulse suppression	0,6 ms	0,6 ms
Maximum input delay	4 ms	4 ms
Potential isolation	No	No
Semiconductor outputs	**773110**	**773113**
Number	4	4

Base units
PNOZ m0p

Semiconductor outputs	773110	773113
Switching capability		
Voltage	**24 V**	**24 V**
Current	**2 A**	**2 A**
Power	**48 W**	**48 W**
Signal level at "1"	**UB - 0.5 VDC at 2 A**	**UB - 0.5 VDC at 2 A**
Residual current at "0"	**0,5 mA**	**0,5 mA**
Max. capacitive load	**1 µF**	**1 µF**
Max. duration of off time during self test	**300 µs**	**300 µs**
Switch-off delay	**30 ms**	**30 ms**
Potential isolation	**yes**	**yes**
Short circuit-proof	**yes**	**yes**
Semiconductor outputs (standard)	**773110**	**773113**
Number	**1**	**1**
Switching capability		
Voltage	**24 V**	**24 V**
Current	**0,5 A**	**0,5 A**
Power	**12 W**	**12 W**
Galvanic isolation	**yes**	**yes**
Short circuit-proof	**yes**	**yes**
Residual current at "0"	**0,5 mA**	**0,5 mA**
Signal level at "1"	**UB - 0.5 VDC at 0.5 A**	**UB - 0.5 VDC at 0.5 A**
Test pulse outputs	**773110**	**773113**
Number of test pulse outputs	**4**	**4**
Voltage	**24 V**	**24 V**
Current	**0,5 A**	**0,5 A**
Max. duration of off time during self test	**5 ms**	**5 ms**
Short circuit-proof	**yes**	**yes**
Potential isolation	**No**	**No**
Relay outputs	**773110**	**773113**
Number of relay outputs	**2**	**2**
Utilisation category		
In accordance with the standard	**EN 60947-4-1**	**EN 60947-4-1**

Base units
PNOZ m0p

Relay outputs	773110	773113
Utilisation category of safety contacts		
AC1 at	**240 V**	**240 V**
Max. current	**6 A**	**6 A**
Max. power	**1440 VA**	**1440 VA**
DC1 at	**24 V**	**24 V**
Max. current	**6 A**	**6 A**
Max. power	**144 W**	**144 W**
Utilisation category		
In accordance with the standard	**EN 60947-5-1**	**EN 60947-5-1**
Utilisation category of safety contacts		
AC15 at	**230 V**	**230 V**
Max. current	**3 A**	**3 A**
Max. power	**690 W**	**690 W**
DC13 (6 cycles/min) at	**24 V**	**24 V**
Max. current	**3 A**	**3 A**
Max. power	**72 W**	**72 W**
Airgap creepage between		
Relay contacts	**3 mm**	**3 mm**
Relay contacts and other circuits	**5,5 mm**	**5,5 mm**
External contact fuse protection, safety contacts		
In accordance with the standard	**EN 60947-5-1**	**EN 60947-5-1**
Blow-out fuse, quick	**6 A**	**6 A**
Blow-out fuse, slow	**6 A**	**6 A**
Circuit breaker 24V AC/DC, characteristic B/C	**6 A**	**6 A**
Switch-off delay	**50 ms**	**50 ms**
Potential isolation	**yes**	**yes**
Cascading output as standard output	**773110**	**773113**
Number	**1**	**1**
Switching capability		
Voltage	**24 V**	**24 V**
Current	**0,2 A**	**0,2 A**
Power	**4,8 W**	**4,8 W**
Galvanic isolation	**No**	**No**
Short circuit-proof	**yes**	**yes**
Residual current at "0"	**0,5 mA**	**0,5 mA**
Ethernet interface	**773110**	**773113**
Number	–	**2**

Base units
PNOZ m0p

Serial interface	773110	773113
Number of RS232 interfaces	1	–
Times	**773110**	**773113**
Switch-on delay	5 s	5 s
Supply interruption before de-energisation	20 ms	20 ms
Simultaneity, channel 1 and 2 max.	3 s	3 s
Simultaneity in the two-hand circuit	0,5 s	0,5 s
Max. cycle time of the device	15 ms	15 ms
Max. processing time for data communication	–	50 ms
Environmental data	**773110**	**773113**
Ambient temperature		
In accordance with the standard	EN 60068-2-14	EN 60068-2-14
Temperature range	0 - 60 °C	0 - 60 °C
Forced convection in control cabinet off	55 °C	55 °C
Storage temperature		
In accordance with the standard	EN 60068-2-1/-2	EN 60068-2-1/-2
Temperature range	-25 - 70 °C	-25 - 70 °C
Climatic suitability		
In accordance with the standard	EN 60068-2-30, EN 60068-2-78	EN 60068-2-30, EN 60068-2-78
Humidity	93 % r. h. at 40 °C	93 % r. h. at 40 °C
Condensation during operation	Not permitted	Not permitted
Max. operating height above sea level	2000 m	2000 m
EMC	EN 61131-2	EN 61131-2
Vibration		
In accordance with the standard	EN 60068-2-6	EN 60068-2-6
Frequency	10 - 150 Hz	10 - 150 Hz
Acceleration	1g	1g
Shock stress		
In accordance with the standard	EN 60068-2-27	EN 60068-2-27
Acceleration	15g	15g
Duration	11 ms	11 ms
Airgap creepage		
In accordance with the standard	EN 61131-2	EN 61131-2
Overvoltage category	III	III
Pollution degree	2	2
Rated insulation voltage	250 V	250 V
Rated impulse withstand voltage	6 kV	6 kV

Base units
PNOZ m0p

Environmental data	773110	773113
Protection type		
In accordance with the standard	**EN 60529**	**EN 60529**
Housing	**IP20**	**IP20**
Terminals	**IP20**	**IP20**
Mounting area (e.g. control cabinet)	**IP54**	**IP54**
Potential isolation	**773110**	**773113**
Potential isolation between	**SC output and system voltage**	**SC output and system voltage**
Type of potential isolation	**Protective separation**	**Protective separation**
Rated surge voltage	**2500 V**	**2500 V**
Potential isolation between	**Relay output and system voltage**	**Relay output and system voltage**
Type of potential isolation	**Protective separation**	**Protective separation**
Rated surge voltage	**6000 V**	**6000 V**
Mechanical data	**773110**	**773113**
Mounting position	**horizontally on mounting rail**	**horizontally on mounting rail**
DIN rail		
Top hat rail	**35 x 7,5 EN 50022**	**35 x 7,5 EN 50022**
Recess width	**27 mm**	**27 mm**
Max. cable length		
Max. cable length per input	**1 km**	**1 km**
Sum of individual cable lengths at the test pulse output	**40 km**	**40 km**
Material		
Bottom	**PPO UL 94 V0**	**PPO UL 94 V0**
Front	**ABS UL 94 V0**	**ABS UL 94 V0**
Connection type	**Spring-loaded terminal, screw terminal**	**Spring-loaded terminal, screw terminal**
Conductor cross section with screw terminals		
1 core flexible	**0,25 - 1,5 mm², 24 - 16 AWG**	**0,25 - 1,5 mm², 24 - 16 AWG**
2 core with the same cross section, flexible without crimp connectors or with TWIN crimp connectors	**0,25 - 0,75 mm², 24 - 20 AWG**	**0,25 - 0,75 mm², 24 - 20 AWG**
Conductor cross section with screw terminals (relay outputs)		
1 core flexible	**0,25 - 2,5 mm², 24 - 12 AWG**	**0,25 - 2,5 mm², 24 - 12 AWG**
2 core with the same cross section, flexible without crimp connectors or with TWIN crimp connectors	**0,25 - 1,5 mm², 24 - 16 AWG**	**0,25 - 1,5 mm², 24 - 16 AWG**
Torque setting with screw terminals	**0,25 Nm**	**0,25 Nm**

Base units
PNOZ m0p

Mechanical data	773110	773113
Torque setting with screw terminals (relay outputs)	**0,5 Nm**	**0,5 Nm**
Stripping length with screw terminals	**7 mm**	**7 mm**
Stripping length with screw terminals (relay outputs)	**8 mm**	**8 mm**
Conductor cross section with spring-loaded terminals		
1 core flexible without crimp connector	**0,25 - 1,5 mm², 24 - 16 AWG**	**0,25 - 1,5 mm², 24 - 16 AWG**
1 core flexible with crimp connector	**0,25 - 0,75 mm², 24 - 20 AWG**	**0,25 - 0,75 mm², 24 - 20 AWG**
Conductor cross section with spring-loaded terminals (relay outputs)		
1 core flexible without crimp connector	**0,25 - 2,5 mm², 24 - 12 AWG**	**0,25 - 2,5 mm², 24 - 12 AWG**
1 core flexible with crimp connector	**0,25 - 1,5 mm², 24 - 16 AWG**	**0,25 - 1,5 mm², 24 - 16 AWG**
Spring-loaded terminals: Terminal points per connection	**1**	**1**
Stripping length with spring-loaded terminals	**9 mm**	**9 mm**
Stripping length with spring-loaded terminals (relay outputs)	**10 mm**	**10 mm**
Dimensions		
Height	**94 mm**	**94 mm**
Width	**135 mm**	**135 mm**
Depth	**121 mm**	**121 mm**
Weight	**499 g**	**518 g**

Where standards are undated, the 2020-07 latest editions shall apply.

Safety characteristic data

Unit	Operating mode	EN ISO 13849-1: 2015 PL	EN ISO 13849-1: 2015 Category	EN 62061 SIL CL	EN 62061 PFH_D [1/h]	EN ISO 13849-1: 2015 T_M [year]
Logic						
CPU	**2-channel**	**PL e**	**Cat. 4**	**SIL CL 3**	**4,90E-09**	**20**

Base units
PNOZ m0p

Input						
SC inputs	**1-channel**	**PL d**	**Cat. 2**	**SIL CL 2**	**2,50E-09**	**20**
SC inputs	**2-channel**	**PL e**	**Cat. 4**	**SIL CL 3**	**2,90E-10**	**20**
SC inputs	**Short circuit-forming safety mats**	**PL d**	**Cat. 3**	**SIL CL 2**	**1,81E-09**	**20**
SC inputs	**1-ch., pulsed light barrier**	**PL e**	**Cat. 4**	**SIL CL 3**	**2,50E-10**	**20**
Cascad. inputs	–	**PL e**	**Cat. 4**	**SIL CL 3**	**3,10E-10**	**20**
Output						
SC outputs	**1-channel**	**PL d**	**Cat. 2**	**SIL CL 2**	**7,00E-09**	**20**
SC outputs	**2-channel**	**PL e**	**Cat. 4**	**SIL CL 3**	**8,60E-10**	**20**
Cascad. outputs	–	**PL e**	**Cat. 4**	**SIL CL 3**	**4,91E-10**	**20**
Relay outputs	**1-channel**	**PL c**	**Cat. 1**	**-**	**2,90E-08**	**20**
Relay outputs	**2-channel**	**PL e**	**Cat. 4**	**SIL CL 3**	**3,00E-10**	**20**

All the units used within a safety function must be considered when calculating the safety characteristic data.

The PFH value depends on the switch frequency and the load of the relay output.
If the service life graphs are not accessible, the stated PFH value can be used irrespective of the switch frequency and the load, as the PFH value already considers the relay's B10d value as well as the failure rates of the other components.

Base units
PNOZ m0p

Supplementary data

Service life graph for the relay contacts

The service life graphs indicate the number of cycles from which failures due to wear must be expected. The wear is mainly caused by the electrical load; the mechanical load is negligible.

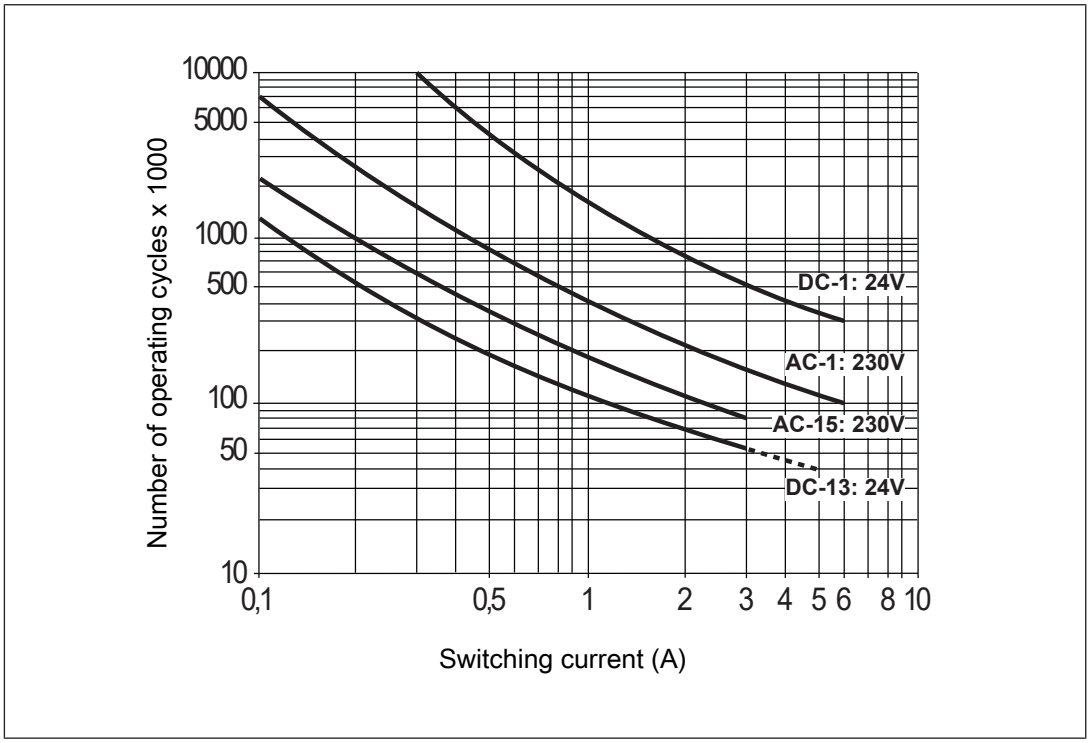

Fig.: Service life graphs at 24 VDC and 230 VAC

Base units
PNOZ m0p

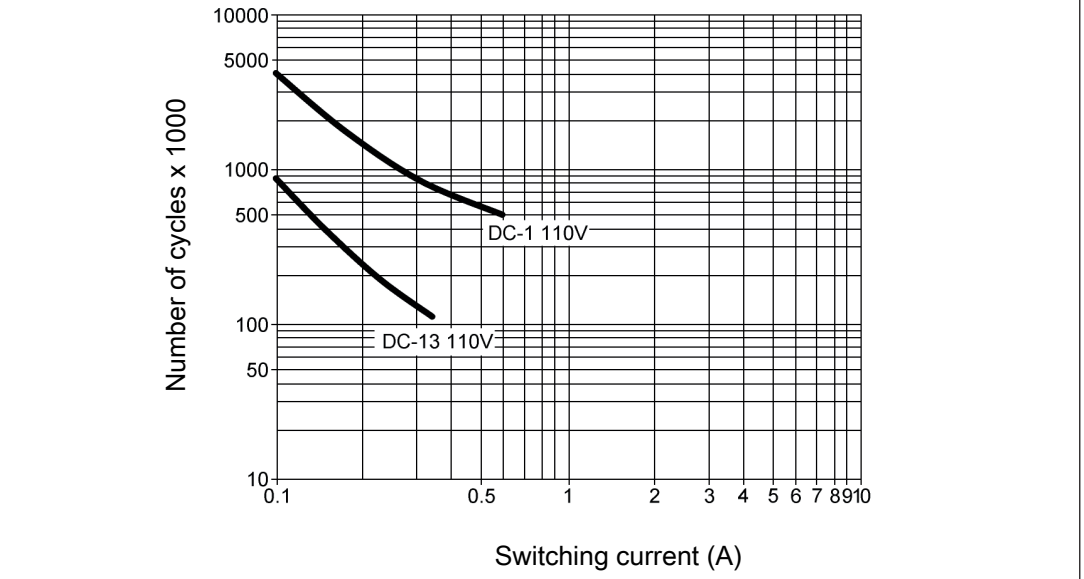

Fig.: Service life graphs at 110 VDC

Example

- Inductive load: 0.2 A
- Utilisation category: AC15
- Contact service life: 1 000 000 cycles

Provided the application to be implemented requires fewer than 1 000 000 cycles, the PFH value (see Technical details [91]) can be used in the calculation.

To increase the service life, sufficient spark suppression must be provided on all relay contacts. With capacitive loads, any power surges that occur must be noted. With DC contactors, use flywheel diodes for spark suppression.

We recommend you use semiconductor outputs to switch 24 VDC loads.

Base units
PNOZ m0p

Order reference

Product

Product type	Features	Order no.
PNOZ m0p	Base unit	773 110
PNOZ m0p ETH	Base unit, Ethernet interface	773 113

Accessories

Connection terminals

Product type	Features	Order No.
Set spring terminals	1 set of spring-loaded terminals	783 100
Set screw terminals	1 set of screw terminals	793 100

Terminator, jumper

Product type	Features	Order no.
PNOZmulti bus terminator	Terminator	779 110
KOP-XE	Jumper	774 639

Base units
PNOZ m1p



Overview

Unit features

Application of the product PNOZ m1p:

Base unit from the configurable control system PNOZmulti

The product has the following features:

- Can be configured in the PNOZmulti Configurator
- Positive-guided relay outputs:
  - 2 safety outputs
    Depending on the application, up to PL e of EN ISO 13849-1 and up to SIL CL 3 of EN IEC 62061
- Semiconductor outputs:
  - 4 safety outputs
    Depending on the application, up to PL e of EN ISO 13849-1 and up to SIL CL 3 of EN IEC 62061
  - 1 output for standard applications
- 4 test pulse outputs
- 1 cascading input and output;
  can also be used as a standard output
- 20 inputs for connecting, for example:
  - E-STOP pushbuttons
  - Two-hand pushbuttons
  - Safety gate limit switches
  - Start buttons
  - Light beam devices
  - Scanners
  - Enabling switches
  - PSEN
  - Operating mode selector switches

  - Safety mats
- Muting function
- LED indicator for:
  - Diagnostics
  - Supply voltage
  - Output circuits
  - Input circuits
- Test pulse outputs used to monitor shorts across the inputs
- Monitoring of shorts between the safety outputs
- Expansion modules can be connected
  (please refer to the document "PNOZmulti System Expansion" for details of the type and number that can be connected)
- Integrated interfaces:
  - PNOZ m1p: Serial interface RS232
  - PNOZ m1p **ETH**: 2 Ethernet interfaces
- Plug-in connection terminals:
  Either spring-loaded terminal or screw terminal available as an accessory (see Order references for accessories [📖 772]).
- Coated version:

  Increased environmental requirements (see Technical details [📖 111])

Chip card

To be able to use the product you will need a chip card.

Chip cards are available with memories of 8 kByte and 32 kByte. For large-scale projects we recommend the 32 kByte chip card (see Technical Catalogue: Accessories chapter).

Base units
PNOZ m1p

Front view

PNOZ m1p

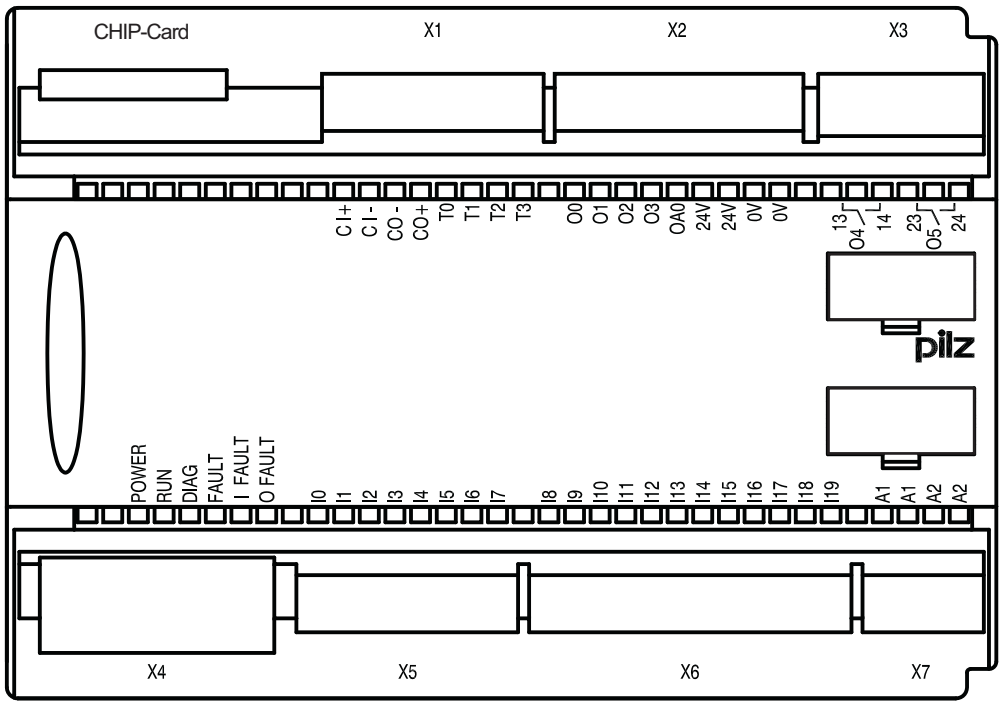

Base units
PNOZ m1p

PNOZ m1p ETH

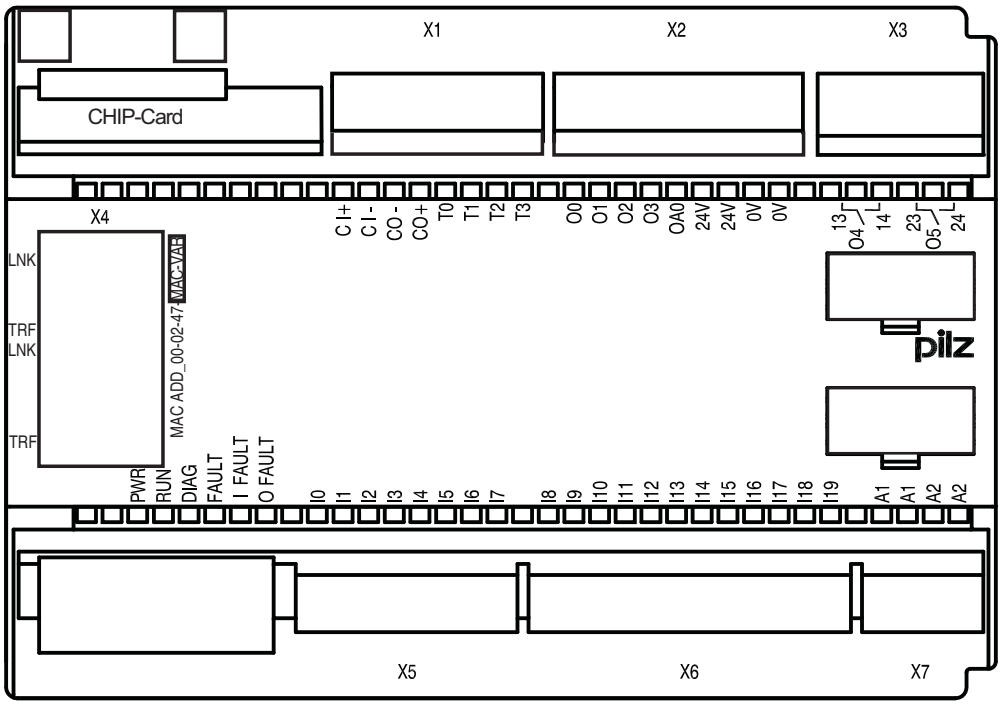

Legend:

CHIP card	Chipkarte interface
X1	Cascading inputs and outputs CI and CO, Test pulse outputs T0 ... T3
X2	Semiconductor outputs O0 ... O3, Auxiliary output OA0, Supply connections
X3	Relay outputs O4 and O5
X4	RS232 interface / Ethernet interface
X5, X6	Inputs I0 ... I19
X7	Power supply
LEDs:	PWR RUN DIAG FAULT I FAULT O FAULT

Base units
PNOZ m1p

Function description

Functions

The function of the inputs and outputs on the control system depends on the safety circuit created using the PNOZmulti Configurator. A chip card is used to download the safety circuit to the base unit. The base unit has 2 microcontrollers that monitor each other. They evaluate the input circuits on the base unit and expansion modules and switch the outputs on the base unit and expansion modules accordingly.

The LEDs on the base unit and expansion modules indicate the status of the configurable control system PNOZmulti.

The online help on the PNOZmulti Configurator contains descriptions of the operating modes and all the functions of the control system, plus connection examples.

Block diagram

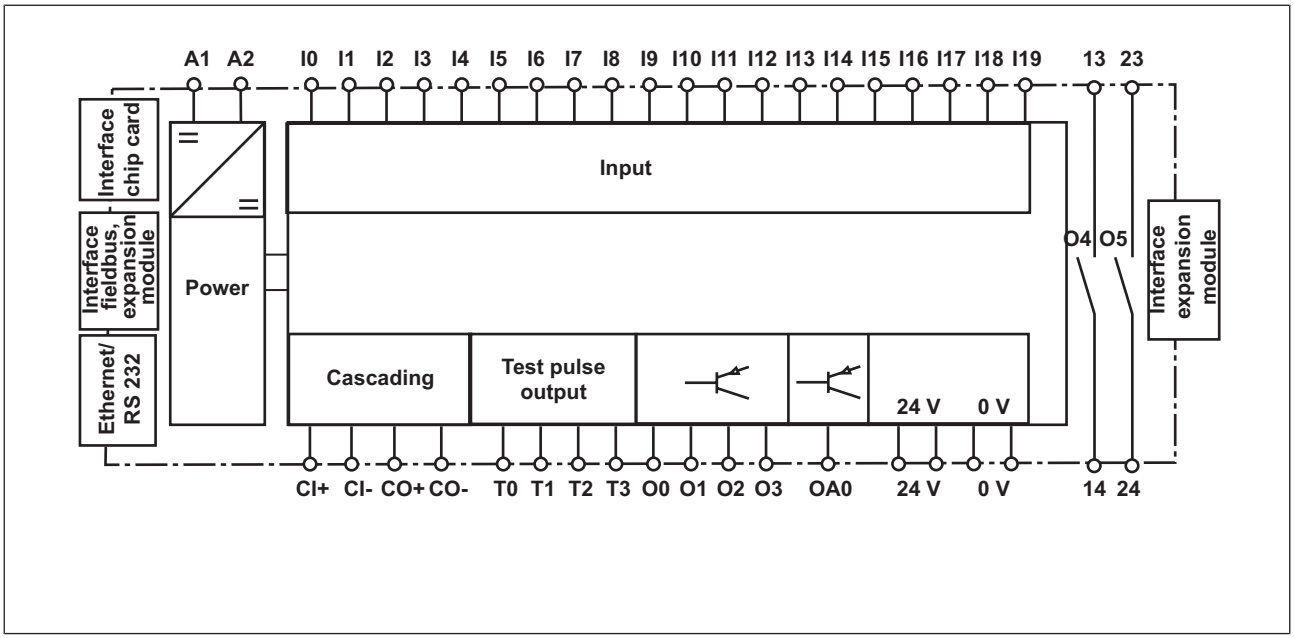

Base units
PNOZ m1p

Installation

Dimensions

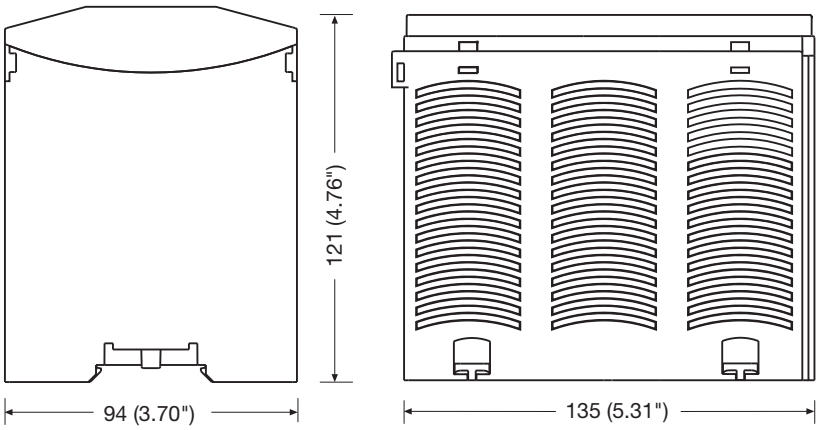

Commissioning

General wiring guidelines

The wiring is defined in the circuit diagram in the Configurator. There you can select the inputs that are to perform a safety function and the outputs that are to switch this safety function.

Please note:

- Information given in the Technical details [111] must be followed.
- Outputs:
  - O0 to O5 are safety outputs
  - O4 and O5 are relay outputs
  - O0 to O3 are semiconductor outputs
  - OA0 is an output to delete a project from the base unit (see online help for the PNOZmutli Configurator).
- To prevent contact welding, a fuse should be connected before the output contacts (see technical details).
- Use copper wiring with a temperature stability of 75°C.
- Adequate protection must be provided on all output contacts with inductive loads.
- The control system and input circuits must always be supplied by a single power supply. The power supply must meet the regulations for extra low voltages with protective separation.

Base units
PNOZ m1p

- Two connection terminals are available for each of the supply connections 24 V and 0 V (semiconductor outputs), plus A1 and A2 (power supply). This means that the supply voltage can be looped through several connections. When the supply voltage is looped, the current at each terminal may not exceed 3 A.
- Test pulse outputs must exclusively be used to test the inputs. They must not be used to drive loads.
  Do not route the test pulse lines together with actuator cables within an unprotected multicore cable.
- Test pulse outputs are also used to supply safety mats that trigger a short circuit.
  Test pulses that are used for the safety mat may not be reused for other purposes.

Connection

Supply voltage	AC	DC
For the safety system (connector X7)	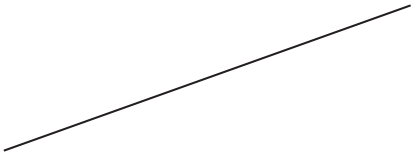	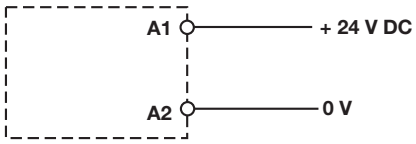
For the semiconductor outputs (connector X2) Must always be present, even if the semiconductor outputs are not used	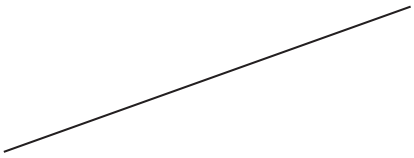	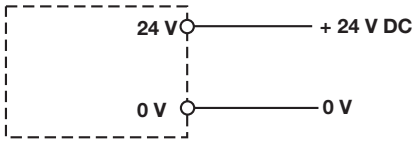

Supply voltage

Input circuit	Single-channel	Dual-channel
E-STOP **without** detection of shorts across contacts	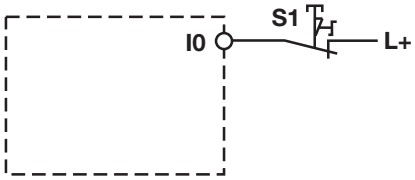	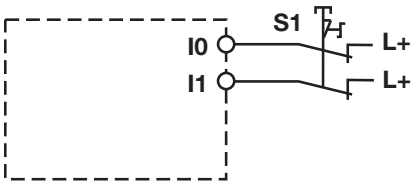
E-STOP **with** detection of shorts across contacts	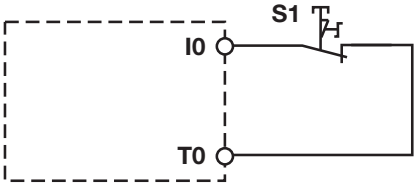	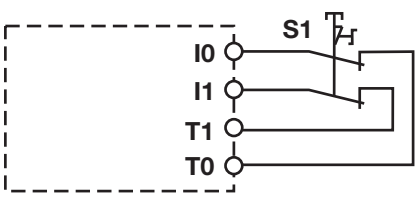

Connection examples for the input circuit

Base units
PNOZ m1p

Start circuit	Input circuit without detection of shorts across contacts	Input circuit with detection of shorts across contacts
	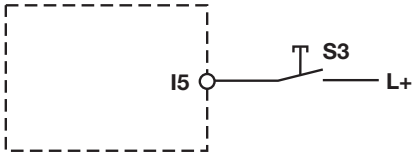	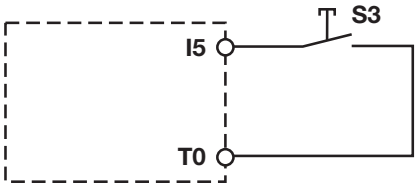

Connection examples for start circuit

Redundant output	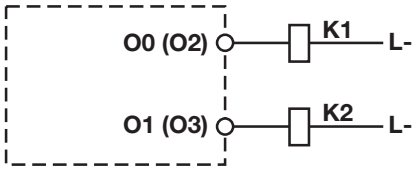	
Single output	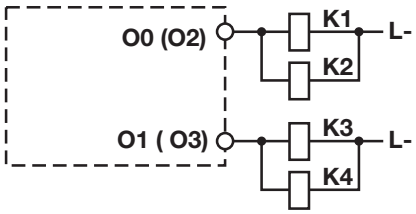	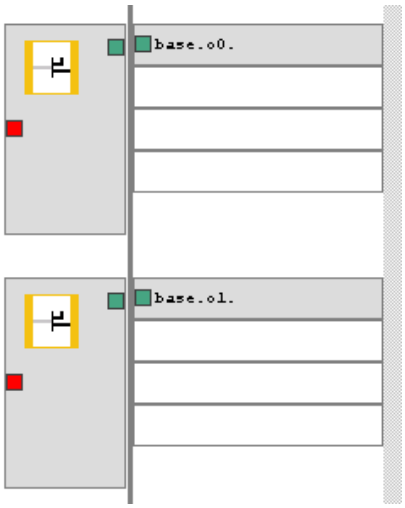

Connection examples for semiconductor outputs

Base units
PNOZ m1p

Redundant output	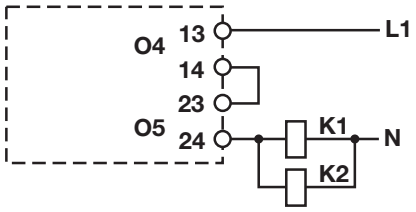	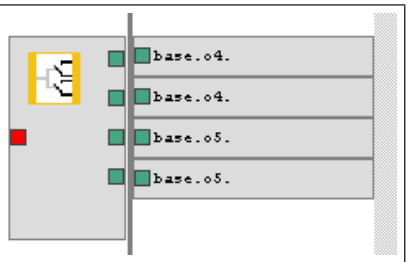
Single output	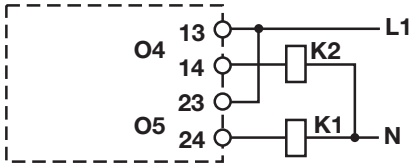	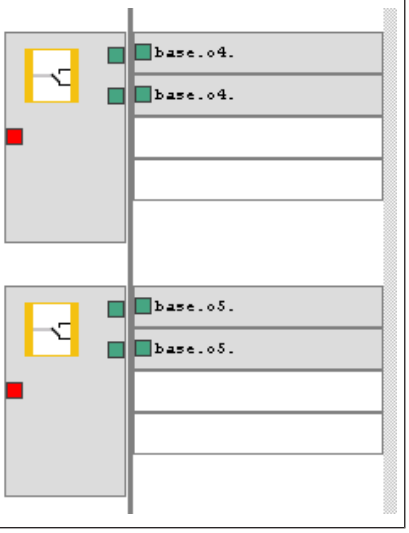

Connection examples for relay outputs

Feedback loop	Redundant output
Contacts from external contactors	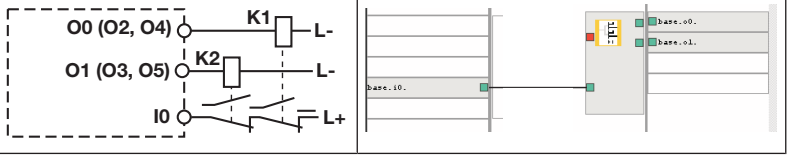

Connection examples for feedback loop

Base units
PNOZ m1p

Connection example

Dual-channel E-STOP and safety gate wiring, monitored start (I17), feedback loop (I14), cascading output as auxiliary output (CO+/A2)

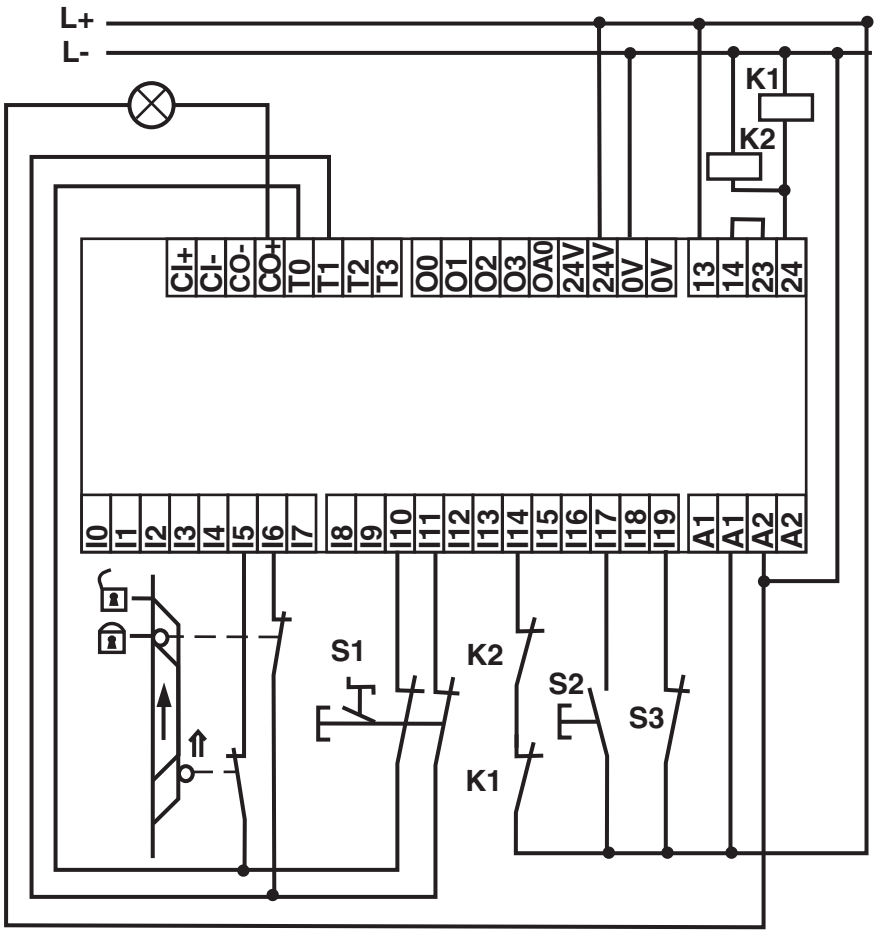

Base units
PNOZ m1p

Technical Details

General	773100	773103	773104	773105
Certifications	BG, CCC, CE, EAC (Eurasian), KCC, KOSHA, TÜV, cULus Listed	BG, CCC, CE, EAC (Eurasian), KCC, TÜV, cULus Listed	BG, CCC, CE, EAC (Eurasian), TÜV, cULus Listed	BG, CCC, CE, EAC (Eurasian), KCC, KOSHA, TÜV, cULus Listed
Electrical data	**773100**	**773103**	**773104**	**773105**
Supply voltage				
for	Supply to the system	Supply to the system	Supply to the system	Supply to the system
Voltage	24 V	24 V	24 V	24 V
Kind	DC	DC	DC	DC
Voltage tolerance	-15 %/+20 %	-15 %/+20 %	-15 %/+20 %	-15 %/+20 %
Output of external power supply (DC) at no load	8 W	9 W	9 W	8 W
Residual ripple DC	5 %	5 %	5 %	5 %
Supply voltage				
for	Supply to the SC outputs	Supply to the SC outputs	Supply to the SC outputs	Supply to the SC outputs
Voltage	24 V	24 V	24 V	24 V
Kind	DC	DC	DC	DC
Voltage tolerance	-15 %/+20 %	-15 %/+20 %	-15 %/+20 %	-15 %/+20 %
Output of external power supply (DC)	192 W	192 W	192 W	192 W
Residual ripple DC	5 %	5 %	5 %	5 %
Potential isolation	yes	yes	yes	yes
Supply voltage				
Power consumption per expansion module	2,5 W	2,5 W	2,5 W	2,5 W
Status indicator	LED	LED	LED	LED
Inputs	**773100**	**773103**	**773104**	**773105**
Number	20	20	20	20
Max. number of live inputs within the max. permitted ambient temperature (see "Environmental data")	U_B <= 26,4 V : 20, U_B > 26,4 V : 15	U_B <= 26,4 V : 20, U_B > 26,4 V : 15	U_B <= 26,4 V : 20, U_B > 26,4 V : 15	U_B <= 26,4 V : 20, U_B > 26,4 V : 15
Signal level at "0"	-3 - +5 V DC	-3 - +5 V DC	-3 - +5 V DC	-3 - +5 V DC

Base units
PNOZ m1p

Inputs	773100	773103	773104	773105
Signal level at "1"	15 - 30 V DC	15 - 30 V DC	15 - 30 V DC	15 - 30 V DC
Input voltage in accordance with EN 61131-2 Type 1	24 V DC	24 V DC	24 V DC	24 V DC
Input current at rated voltage	8 mA	8 mA	8 mA	8 mA
Min. pulse duration	18 ms	18 ms	18 ms	18 ms
Pulse suppression	0,6 ms	0,6 ms	0,6 ms	0,6 ms
Maximum input delay	4 ms	4 ms	4 ms	4 ms
Potential isolation	No	No	No	No
Semiconductor outputs	**773100**	**773103**	**773104**	**773105**
Number	4	4	4	4
Switching capability				
Voltage	24 V	24 V	24 V	24 V
Current	2 A	2 A	2 A	2 A
Power	48 W	48 W	48 W	48 W
Derating of coated version at an ambient temperature > 50 °C				
Voltage	–	–	24 V	24 V
Current	–	–	1 A	1 A
Power	–	–	24 W	24 W
Signal level at "1"	UB - 0.5 VDC at 2 A	UB - 0.5 VDC at 2 A	UB - 0.5 VDC at 2 A	UB - 0.5 VDC at 2 A
Residual current at "0"	0,5 mA	0,5 mA	0,5 mA	0,5 mA
Max. capacitive load	1 µF	1 µF	1 µF	1 µF
Max. duration of off time during self test	300 µs	300 µs	300 µs	300 µs
Switch-off delay	30 ms	30 ms	30 ms	30 ms
Potential isolation	yes	yes	yes	yes
Short circuit-proof	yes	yes	yes	yes
Semiconductor outputs (standard)	**773100**	**773103**	**773104**	**773105**
Number	1	1	1	1
Switching capability				
Voltage	24 V	24 V	24 V	24 V
Current	0,5 A	0,5 A	0,5 A	0,5 A
Power	12 W	12 W	12 W	12 W
Galvanic isolation	yes	yes	yes	yes

Base units
PNOZ m1p

Semiconductor outputs (standard)	773100	773103	773104	773105
Short circuit-proof	yes	yes	yes	yes
Residual current at "0"	0,5 mA	0,5 mA	0,5 mA	0,5 mA
Signal level at "1"	UB - 0.5 VDC at 0.5 A	UB - 0.5 VDC at 0.5 A	UB - 0.5 VDC at 0.5 A	UB - 0.5 VDC at 0.5 A
Test pulse outputs	**773100**	**773103**	**773104**	**773105**
Number of test pulse outputs	4	4	4	4
Voltage	24 V	24 V	24 V	24 V
Current	0,5 A	0,5 A	0,5 A	0,5 A
Max. duration of off time during self test	5 ms	5 ms	5 ms	5 ms
Short circuit-proof	yes	yes	yes	yes
Potential isolation	No	No	No	No
Relay outputs	**773100**	**773103**	**773104**	**773105**
Utilisation category				
In accordance with the standard	EN 60947-4-1	EN 60947-4-1	EN 60947-4-1	EN 60947-4-1
Utilisation category of safety contacts				
AC1 at	240 V	240 V	240 V	240 V
Max. current	6 A	6 A	6 A	6 A
Max. power	1440 VA	1440 VA	1440 VA	1440 VA
DC1 at	24 V	24 V	24 V	24 V
Max. current	6 A	6 A	6 A	6 A
Max. power	144 W	144 W	144 W	144 W
Derating of coated version at an ambient temperature > 50 °C				
Safety contacts, AC1 at	–	–	240 V	240 V
Max. current	–	–	4 A	4 A
Max. power	–	–	960 W	960 W
Safety contacts, DC 1 at	–	–	24 V	24 V
Max. current	–	–	4 A	4 A
Max. power	–	–	96 W	96 W
Utilisation category				
In accordance with the standard	EN 60947-5-1	EN 60947-5-1	EN 60947-5-1	EN 60947-5-1

Base units
PNOZ m1p

Relay outputs	773100	773103	773104	773105
Utilisation category of safety contacts				
AC15 at	230 V	230 V	230 V	230 V
Max. current	3 A	3 A	3 A	3 A
Max. power	690 W	690 W	690 W	690 W
DC13 (6 cycles/ min) at	24 V	24 V	24 V	24 V
Max. current	3 A	3 A	3 A	3 A
Max. power	72 W	72 W	72 W	72 W
Airgap creepage between				
Relay contacts	3 mm	3 mm	3 mm	3 mm
Relay contacts and other circuits	5,5 mm	5,5 mm	5,5 mm	5,5 mm
External contact fuse protection, safety contacts				
In accordance with the standard	EN 60947-5-1	EN 60947-5-1	EN 60947-5-1	EN 60947-5-1
Blow-out fuse, quick	6 A	6 A	6 A	6 A
Blow-out fuse, slow	6 A	6 A	6 A	6 A
Circuit breaker 24V AC/DC, characteristic B/C	6 A	6 A	6 A	6 A
Switch-off delay	50 ms	50 ms	50 ms	50 ms
Potential isolation	yes	yes	yes	yes
Cascading output as standard output	**773100**	**773103**	**773104**	**773105**
Number	1	1	1	1
Switching capability				
Voltage	24 V	24 V	24 V	24 V
Current	0,2 A	0,2 A	0,2 A	0,2 A
Power	4,8 W	4,8 W	4,8 W	4,8 W
Galvanic isolation	No	No	No	No
Short circuit-proof	yes	yes	yes	yes
Residual current at "0"	0,5 mA	0,5 mA	0,5 mA	0,5 mA
Ethernet interface	**773100**	**773103**	**773104**	**773105**
Number	–	2	2	–

Base units
PNOZ m1p

Serial interface	773100	773103	773104	773105
Number of RS232 interfaces	1	–	–	1
Times	**773100**	**773103**	**773104**	**773105**
Switch-on delay	5 s	5 s	5 s	5 s
Supply interruption before de-energisation	20 ms	20 ms	20 ms	20 ms
Simultaneity, channel 1 and 2 max.	3 s	3 s	3 s	3 s
Simultaneity in the two-hand circuit	0,5 s	0,5 s	0,5 s	0,5 s
Max. cycle time of the device	15 ms	15 ms	15 ms	15 ms
Max. processing time for data communication	–	50 ms	50 ms	–
Environmental data	**773100**	**773103**	**773104**	**773105**
Ambient temperature				
In accordance with the standard	EN 60068-2-14	EN 60068-2-14	EN 60068-2-14	EN 60068-2-14
Temperature range	0 - 60 °C	0 - 60 °C	-25 - 60 °C	-25 - 60 °C
Forced convection in control cabinet off	55 °C	55 °C	–	–
Storage temperature				
In accordance with the standard	EN 60068-2-1/-2	EN 60068-2-1/-2	EN 60068-2-1/-2	EN 60068-2-1/-2
Temperature range	-25 - 70 °C	-25 - 70 °C	-25 - 70 °C	-25 - 70 °C
Climatic suitability				
In accordance with the standard	EN 60068-2-30, EN 60068-2-78	EN 60068-2-30, EN 60068-2-78	EN 60068-2-30, EN 60068-2-78	EN 60068-2-30, EN 60068-2-78
Humidity	93 % r. h. at 40 °C	93 % r. h. at 40 °C	93 % r. h. at 40 °C	93 % r. h. at 40 °C
Condensation during operation	Not permitted	Not permitted	Short-term (only with separated extra low voltage)	Short-term (only with separated extra low voltage)
EMC	EN 61131-2	EN 61131-2	EN 61131-2	EN 61131-2
Vibration				
In accordance with the standard	EN 60068-2-6	EN 60068-2-6	EN 60068-2-6	EN 60068-2-6
Frequency	10 - 150 Hz	10 - 150 Hz	5 - 500 Hz	5 - 500 Hz
Acceleration	1g	1g	1g	1g

Base units
PNOZ m1p

Environmental data	773100	773103	773104	773105
Broadband noise				
In accordance with the standard	–	–	**EN 60068-2-64**	**EN 60068-2-64**
Frequency	–	–	**5 - 500 Hz**	**5 - 500 Hz**
Acceleration	–	–	**19 m/s² rms**	**19 m/s² rms**
Corrosive gas check				
SO2: Concentration 10 ppm, duration 10 days, passive	–	–	**DIN V 40046-36**	**DIN V 40046-36**
H2S: Concentration 1 ppm, duration 10 days, passive	–	–	**DIN V 40046-37**	**DIN V 40046-37**
Shock stress				
In accordance with the standard	**EN 60068-2-27**	**EN 60068-2-27**	**EN 60068-2-27**	**EN 60068-2-27**
Acceleration	**15g**	**15g**	**15g**	**15g**
Duration	**11 ms**	**11 ms**	**11 ms**	**11 ms**
Max. operating height above sea level	**2000 m**	**2000 m**	**2000 m**	**2000 m**
Airgap creepage				
In accordance with the standard	**EN 61131-2**	**EN 61131-2**	**EN 61131-2**	**EN 61131-2**
Overvoltage category	**III**	**III**	**III**	**III**
Pollution degree	**2**	**2**	**2**	**2**
Rated insulation voltage	**250 V**	**250 V**	**250 V**	**250 V**
Rated impulse withstand voltage	**6 kV**	**6 kV**	**6 kV**	**6 kV**
Protection type				
In accordance with the standard	**EN 60529**	**EN 60529**	**EN 60529**	**EN 60529**
Mounting area (e.g. control cabinet)	**IP54**	**IP54**	**IP54**	**IP54**
Housing	**IP20**	**IP20**	**IP20**	**IP20**
Terminals	**IP20**	**IP20**	**IP20**	**IP20**
Potential isolation	**773100**	**773103**	**773104**	**773105**
Potential isolation between	**SC output and system voltage**	**SC output and system voltage**	**SC output and system voltage**	**SC output and system voltage**
Type of potential isolation	**Protective separation**	**Protective separation**	**Protective separation**	**Protective separation**

Base units
PNOZ m1p

Potential isolation	773100	773103	773104	773105
Rated surge voltage	**2500 V**	**2500 V**	**2500 V**	**2500 V**
Potential isolation between	**Relay output and system voltage**	**Relay output and system voltage**	**Relay output and system voltage**	**Relay output and system voltage**
Type of potential isolation	**Protective separation**	**Protective separation**	**Protective separation**	**Protective separation**
Rated surge voltage	**6000 V**	**6000 V**	**6000 V**	**6000 V**
Mechanical data	**773100**	**773103**	**773104**	**773105**
Mounting position	**horizontally on mounting rail**	**horizontally on mounting rail**	**horizontally on mounting rail**	**horizontally on mounting rail**
DIN rail				
Top hat rail	**35 x 7,5 EN 50022**	**35 x 7,5 EN 50022**	**35 x 7,5 EN 50022**	**35 x 7,5 EN 50022**
Recess width	**27 mm**	**27 mm**	**27 mm**	**27 mm**
Max. cable length				
Max. cable length per input	**1 km**	**1 km**	**1 km**	**1 km**
Sum of individual cable lengths at the test pulse output	**40 km**	**40 km**	**40 km**	**40 km**
Material				
Bottom	**PPO UL 94 V0**	**PPO UL 94 V0**	**PPO UL 94 V0**	**PPO UL 94 V0**
Front	**ABS UL 94 V0**	**ABS UL 94 V0**	**ABS UL 94 V0**	**ABS UL 94 V0**
Connection type	**Spring-loaded terminal, screw terminal**	**Spring-loaded terminal, screw terminal**	**Spring-loaded terminal, screw terminal**	**Spring-loaded terminal, screw terminal**
Conductor cross section with screw terminals				
1 core flexible	**0,25 - 1,5 mm², 24 - 16 AWG**	**0,25 - 1,5 mm², 24 - 16 AWG**	**0,25 - 1,5 mm², 24 - 16 AWG**	**0,25 - 1,5 mm², 24 - 16 AWG**
2 core with the same cross section, flexible without crimp connectors or with TWIN crimp connectors	**0,25 - 0,75 mm², 24 - 20 AWG**	**0,25 - 0,75 mm², 24 - 20 AWG**	**0,25 - 0,75 mm², 24 - 20 AWG**	**0,25 - 0,75 mm², 24 - 20 AWG**

Base units
PNOZ m1p

Mechanical data	773100	773103	773104	773105
Conductor cross section with screw terminals (relay outputs)				
1 core flexible	**0,25 - 2,5 mm², 24 - 12 AWG**	**0,25 - 2,5 mm², 24 - 12 AWG**	**0,25 - 2,5 mm², 24 - 12 AWG**	**0,25 - 2,5 mm², 24 - 12 AWG**
2 core with the same cross section, flexible without crimp connectors or with TWIN crimp connectors	**0,25 - 1,5 mm², 24 - 16 AWG**	**0,25 - 1,5 mm², 24 - 16 AWG**	**0,25 - 1,5 mm², 24 - 16 AWG**	**0,25 - 1,5 mm², 24 - 16 AWG**
Torque setting with screw terminals	**0,25 Nm**	**0,25 Nm**	**0,25 Nm**	**0,25 Nm**
Torque setting with screw terminals (relay outputs)	**0,5 Nm**	**0,5 Nm**	**0,5 Nm**	**0,5 Nm**
Stripping length with screw terminals	**7 mm**	**7 mm**	**7 mm**	**7 mm**
Stripping length with screw terminals (relay outputs)	**8 mm**	**8 mm**	**8 mm**	**8 mm**
Conductor cross section with spring-loaded terminals				
1 core flexible without crimp connector	**0,25 - 1,5 mm², 24 - 16 AWG**	**0,25 - 1,5 mm², 24 - 16 AWG**	**0,25 - 1,5 mm², 24 - 16 AWG**	**0,25 - 1,5 mm², 24 - 16 AWG**
1 core flexible with crimp connector	**0,25 - 0,75 mm², 24 - 20 AWG**	**0,25 - 0,75 mm², 24 - 20 AWG**	**0,25 - 0,75 mm², 24 - 20 AWG**	**0,25 - 0,75 mm², 24 - 20 AWG**
Conductor cross section with spring-loaded terminals (relay outputs)				
1 core flexible without crimp connector	**0,25 - 2,5 mm², 24 - 12 AWG**	**0,25 - 2,5 mm², 24 - 12 AWG**	**0,25 - 2,5 mm², 24 - 12 AWG**	**0,25 - 2,5 mm², 24 - 12 AWG**
1 core flexible with crimp connector	**0,25 - 1,5 mm², 24 - 16 AWG**	**0,25 - 1,5 mm², 24 - 16 AWG**	**0,25 - 1,5 mm², 24 - 16 AWG**	**0,25 - 1,5 mm², 24 - 16 AWG**
Spring-loaded terminals: Terminal points per connection	**1**	**1**	**1**	**1**

Base units
PNOZ m1p

Mechanical data	773100	773103	773104	773105
Stripping length with spring-loaded terminals	9 mm	9 mm	9 mm	9 mm
Stripping length with spring-loaded terminals (relay outputs)	10 mm	10 mm	10 mm	10 mm
Dimensions				
Height	94 mm	94 mm	94 mm	94 mm
Width	135 mm	135 mm	135 mm	135 mm
Depth	121 mm	121 mm	121 mm	121 mm
Weight	499 g	518 g	538 g	519 g

Where standards are undated, the 2020-07 latest editions shall apply.

Safety characteristic data

Unit	Operating mode	EN ISO 13849-1: 2015 PL	EN ISO 13849-1: 2015 Category	EN 62061 SIL CL	EN 62061 PFH_D [1/h]	EN ISO 13849-1: 2015 T_M [year]
Logic						
CPU	2-channel	PL e	Cat. 4	SIL CL 3	4,90E-09	20
Expansion	–	PL e	Cat. 4	SIL CL 3	9,20E-09	20
Input						
SC inputs	1-channel	PL d	Cat. 2	SIL CL 2	2,50E-09	20
SC inputs	2-channel	PL e	Cat. 4	SIL CL 3	2,90E-10	20
SC inputs	Short circuit-forming safety mats	PL d	Cat. 3	SIL CL 2	1,81E-09	20
SC inputs	1-ch., pulsed light barrier	PL e	Cat. 4	SIL CL 3	2,50E-10	20
Cascad. inputs	–	PL e	Cat. 4	SIL CL 3	3,10E-10	20
Output						
SC outputs	1-channel	PL d	Cat. 2	SIL CL 2	7,00E-09	20
SC outputs	2-channel	PL e	Cat. 4	SIL CL 3	8,60E-10	20
Cascad. outputs	–	PL e	Cat. 4	SIL CL 3	4,91E-10	20

Base units
PNOZ m1p

Output						
Relay outputs	**1-channel**	**PL c**	**Cat. 1**	**-**	**2,90E-08**	**20**
Relay outputs	**2-channel**	**PL e**	**Cat. 4**	**SIL CL 3**	**3,00E-10**	**20**

All the units used within a safety function must be considered when calculating the safety characteristic data.

The PFH value depends on the switch frequency and the load of the relay output.
If the service life graphs are not accessible, the stated PFH value can be used irrespective of the switch frequency and the load, as the PFH value already considers the relay's B10d value as well as the failure rates of the other components.

Base units
PNOZ m1p

Supplementary data

Service life graph for the relay contacts

The service life graphs indicate the number of cycles from which failures due to wear must be expected. The wear is mainly caused by the electrical load; the mechanical load is negligible.

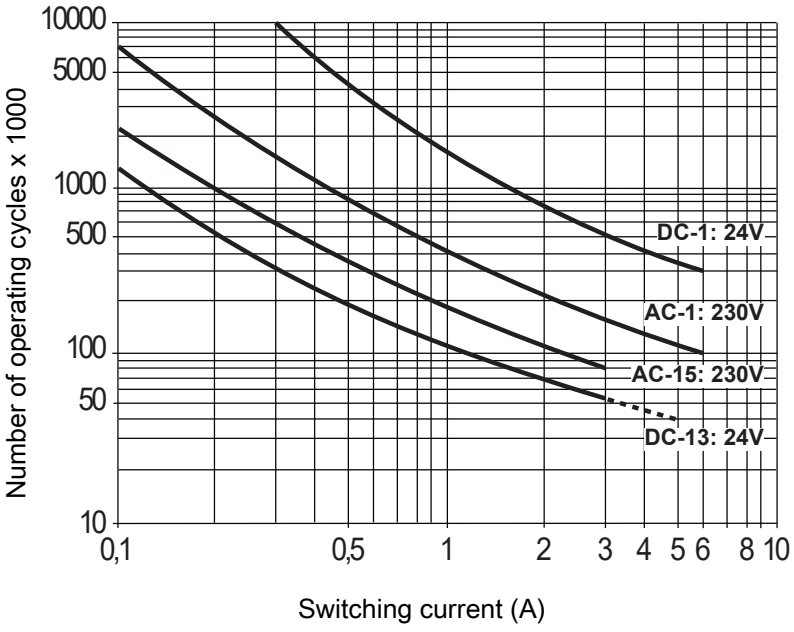

Fig.: Service life graphs at 24 VDC and 230 VAC

Base units
PNOZ m1p

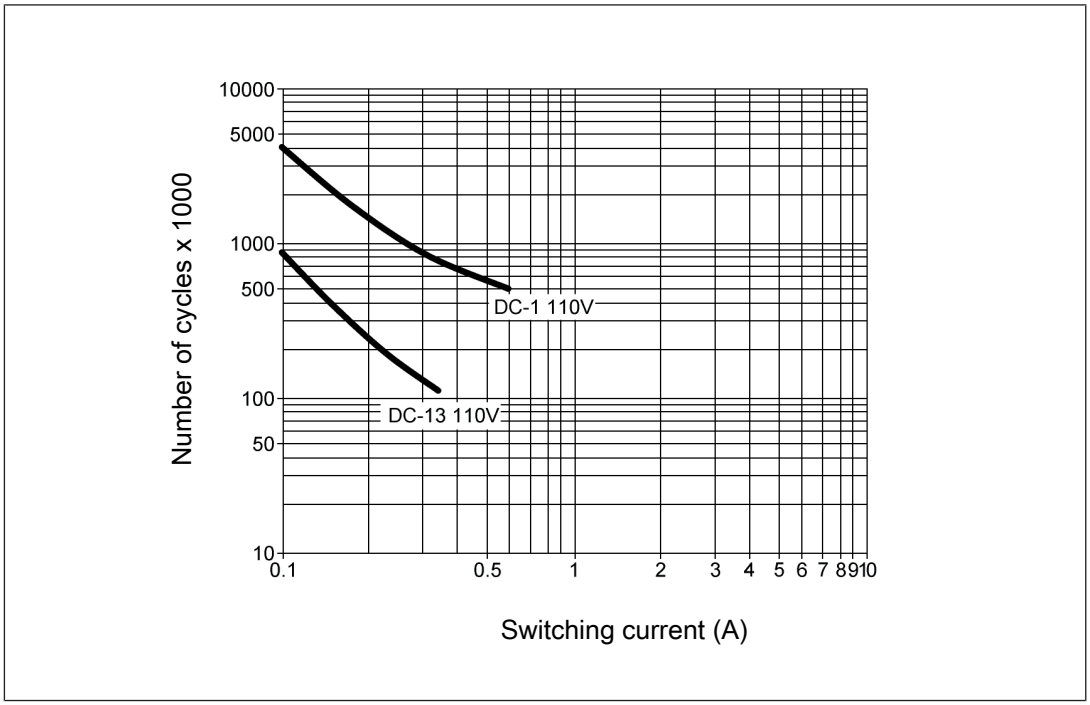

Fig.: Service life graphs at 110 VDC

Example

- Inductive load: 0.2 A
- Utilisation category: AC15
- Contact service life: 1 000 000 cycles

Provided the application to be implemented requires fewer than 1 000 000 cycles, the PFH value (see Technical details [📖 111]) can be used in the calculation.

To increase the service life, sufficient spark suppression must be provided on all relay contacts. With capacitive loads, any power surges that occur must be noted. With DC contactors, use flywheel diodes for spark suppression.

We recommend you use semiconductor outputs to switch 24 VDC loads.

Base units
PNOZ m1p

Order reference

Product

Product type	Features	Order no.
PNOZ m1p	Base unit	773 100
PNOZ m1p coated version	Base unit, coated version	773 105
PNOZ m1p ETH	Base unit, Ethernet interface	773 103
PNOZ m1p ETH coated version	Base unit, Ethernet interface, coated version	773 104

Accessories

Connection terminals

Product type	Features	Order No.
Set spring terminals	1 set of spring-loaded terminals	783 100
Set screw terminals	1 set of screw terminals	793 100

Terminator, jumper

Product type	Features	Order No.
PNOZmulti bus terminator	Terminator	779 110
PNOZmulti bus terminator coated	Terminator, coated version	779 112
KOP-XE	Jumper	774 639
KOP-XE coated	Jumper, coated version	774 640

Base units
PNOZ m2p

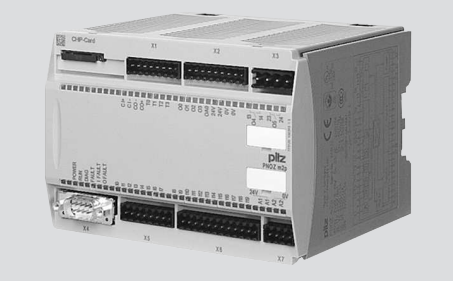

Overview

Unit features

Application of the product PNOZ m2p:

Base unit from the configurable control system PNOZmulti

The product has the following features:

- For applications on mechanical presses
- Can be configured in the PNOZmulti Configurator
- Positive-guided relay outputs:
  - 2 safety outputs
    Depending on the application, up to PL e of EN ISO 13849-1 and up to SIL CL 3 of EN IEC 62061
- Semiconductor outputs:
  - 4 safety outputs
    Depending on the application, up to PL e of EN ISO 13849-1 and up to SIL CL 3 of EN IEC 62061
  - 1 output for standard applications
- 4 test pulse outputs
- 1 cascading input and output;
  can also be used as a standard output
- 20 inputs for connecting, for example:
  - E-STOP pushbuttons
  - Two-hand pushbuttons
  - Safety gate limit switches
  - Start buttons
  - Light beam devices
  - Scanners
  - Enabling switches
  - PSEN

  - Operating mode selector switches
  - Safety mats
- Muting function
- LED indicator for:
  - Diagnostics
  - Supply voltage
  - Output circuits
  - Input circuits
- Test pulse outputs used to monitor shorts across the inputs
- Monitoring of shorts between the safety outputs
- Expansion modules can be connected
  (please refer to the document "PNOZmulti System Expansion" for details of the type and number that can be connected)
- Integrated interfaces:
  - PNOZ m2p: Serial interface RS232
  - PNOZ m2p **ETH**: 2 Ethernet interfaces
- Plug-in connection terminals:
  Either spring-loaded terminal or screw terminal available as an accessory (see Order references for accessories [📖 772]).

Chip card

To be able to use the product you will need a chip card.

Chip cards are available with memories of 8 kByte and 32 kByte. For large-scale projects we recommend the 32 kByte chip card (see Technical Catalogue: Accessories chapter).

Base units
PNOZ m2p

Front view

PNOZ m2p

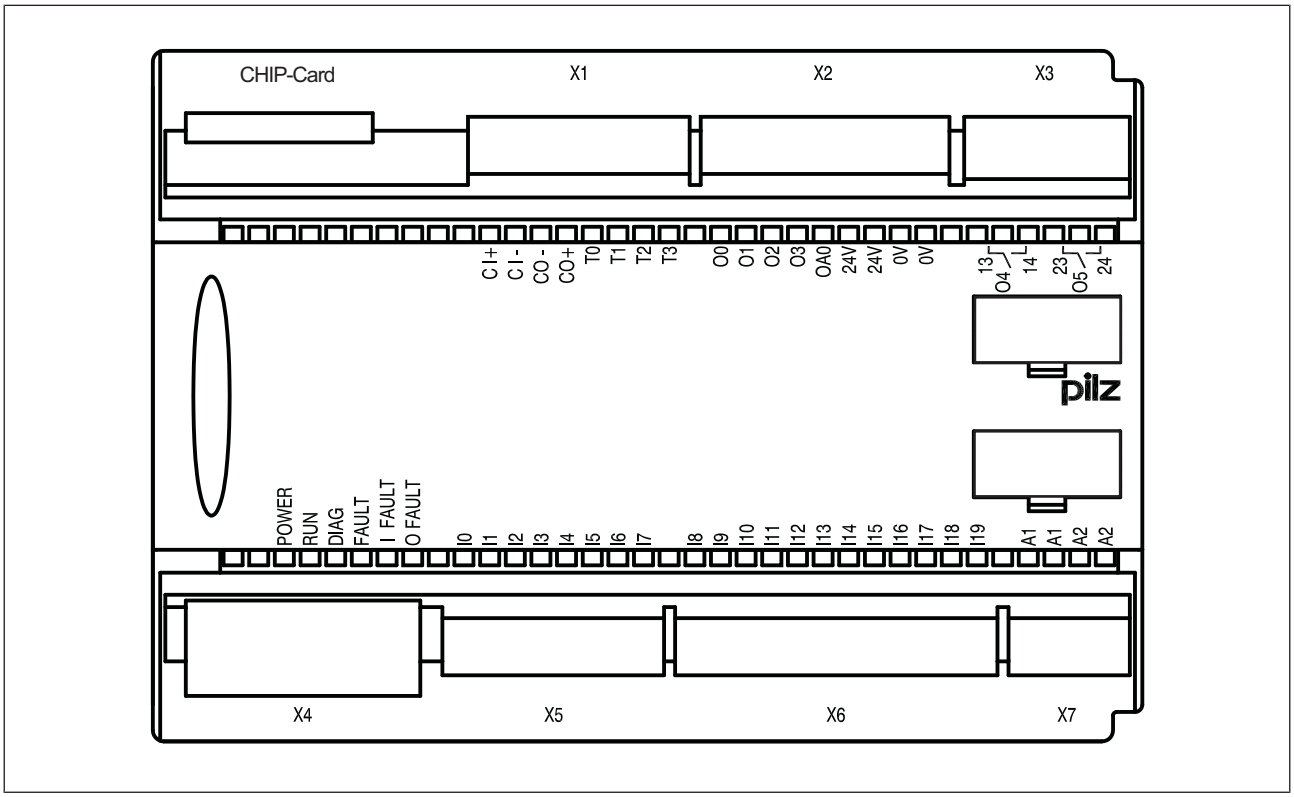

Base units
PNOZ m2p

PNOZ m2p ETH

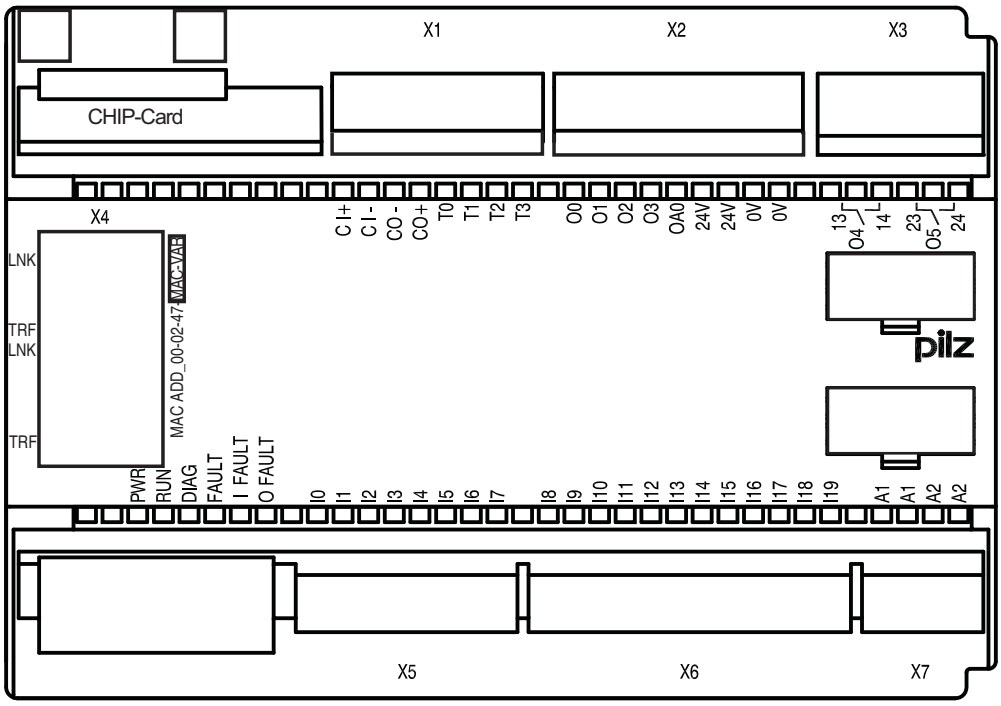

Legend:

CHIP card	Chipkarte interface
X1	Cascading inputs and outputs CI and CO, Test pulse outputs T0 ... T3
X2	Semiconductor outputs O0 ... O3, Auxiliary output OA0, Supply connections
X3	Relay outputs O4 and O5
X4	RS232 interface / Ethernet interface
X5, X6	Inputs I0 ... I19
X7	Power supply
LEDs:	PWR RUN DIAG FAULT I FAULT O FAULT

Base units
PNOZ m2p

Function description

Functions

The function of the inputs and outputs on the control system depends on the safety circuit created using the PNOZmulti Configurator. A chip card is used to download the safety circuit to the base unit. The base unit has 2 microcontrollers that monitor each other. They evaluate the input circuits on the base unit and expansion modules and switch the outputs on the base unit and expansion modules accordingly.

The LEDs on the base unit and expansion modules indicate the status of the configurable control system PNOZmulti.

The online help on the PNOZmulti Configurator contains descriptions of the operating modes and all the functions of the control system, plus connection examples.

Application on mechanical presses

The base unit PNOZ m2p is designed for applications on mechanical presses (see online help for the PNOZmulti Configurator).

Functions:

- Operating modes
  - Set-up mode
  - Single stroke
  - Automatic
- Monitoring a mechanical rotary cam arrangement
- Run monitoring
- Monitoring of electrosensitive protective equipment (cycle mode)
- Driving and monitoring a press safety valve

Base units
PNOZ m2p

Block diagram

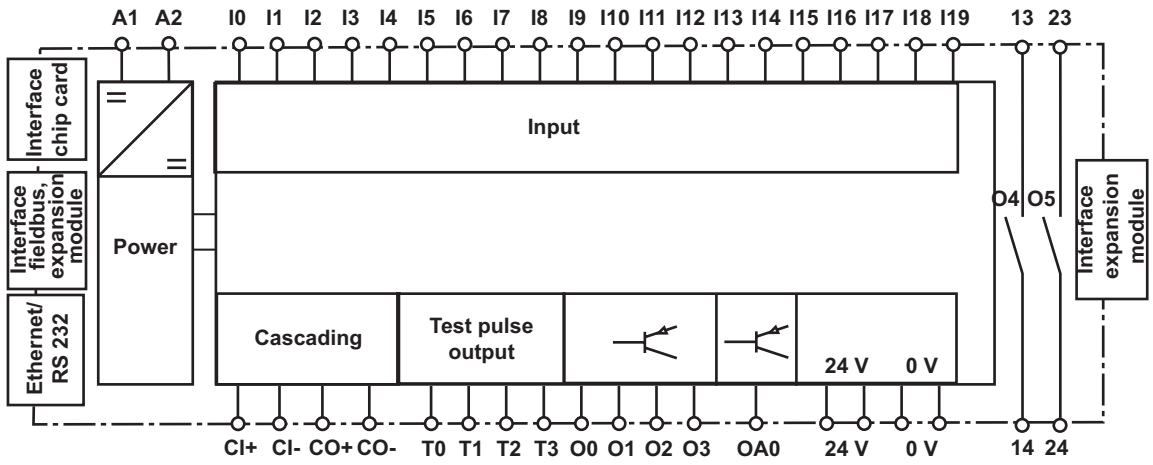

Installation

Dimensions

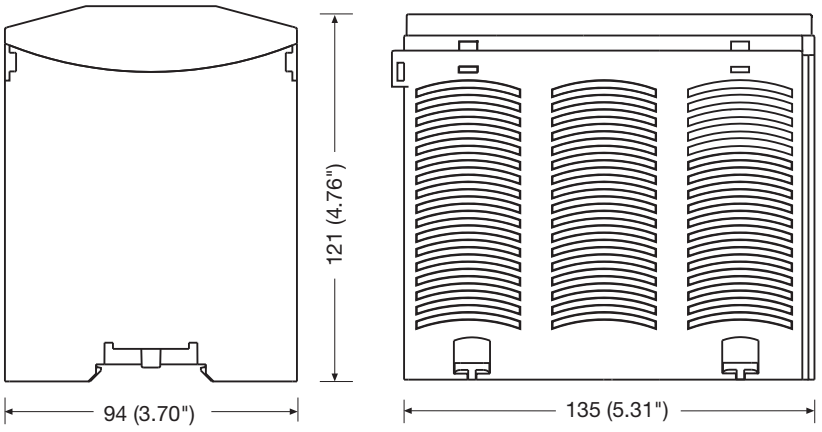

Commissioning

General wiring guidelines

The wiring is defined in the circuit diagram in the Configurator. There you can select the inputs that are to perform a safety function and the outputs that are to switch this safety function.

Please note:

- Information given in the Technical details [135] must be followed.
- Outputs:
  - O0 to O5 are safety outputs
  - O4 and O5 are relay outputs
  - O0 to O3 are semiconductor outputs
  - OA0 is an output to delete a project from the base unit (see online help for the PNOZmutli Configurator).
- To prevent contact welding, a fuse should be connected before the output contacts (see technical details).
- Use copper wiring with a temperature stability of 75°C.
- Adequate protection must be provided on all output contacts with inductive loads.
- The control system and input circuits must always be supplied by a single power supply. The power supply must meet the regulations for extra low voltages with protective separation.
- Two connection terminals are available for each of the supply connections 24 V and 0 V (semiconductor outputs), plus A1 and A2 (power supply). This means that the supply voltage can be looped through several connections. When the supply voltage is looped, the current at each terminal may not exceed 3 A.
- Test pulse outputs must exclusively be used to test the inputs. They must not be used to drive loads.
  Do not route the test pulse lines together with actuator cables within an unprotected multicore cable.
- Test pulse outputs are also used to supply safety mats that trigger a short circuit.
  Test pulses that are used for the safety mat may not be reused for other purposes.

Base units
PNOZ m2p

Connection

Supply voltage	AC	DC
For the safety system (connector X7)	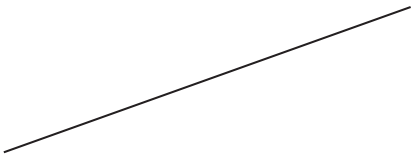	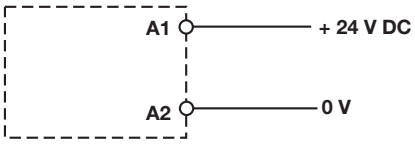
For the semiconductor outputs (connector X2) Must always be present, even if the semiconductor outputs are not used	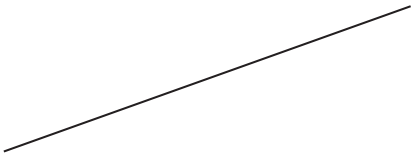	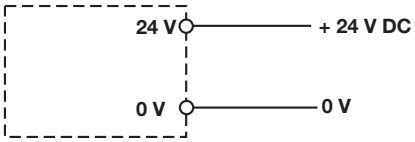

Supply voltage

Input circuit	Single-channel	Dual-channel
E-STOP **without** detection of shorts across contacts	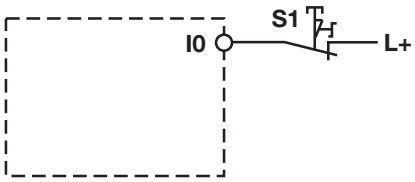	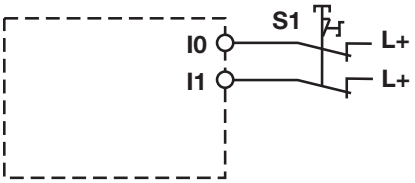
E-STOP **with** detection of shorts across contacts	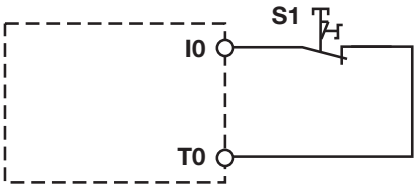	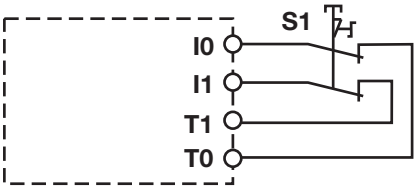

Connection examples for the input circuit

Start circuit	Input circuit without detection of shorts across contacts	Input circuit with detection of shorts across contacts
	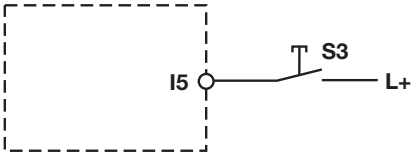	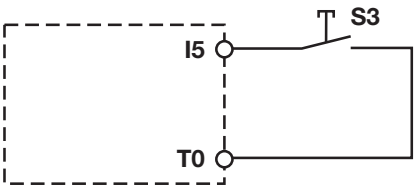

Connection examples for start circuit

Base units
PNOZ m2p

Redundant output	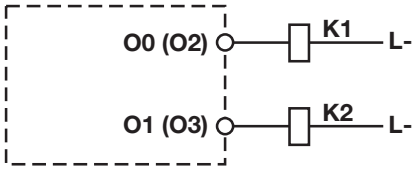	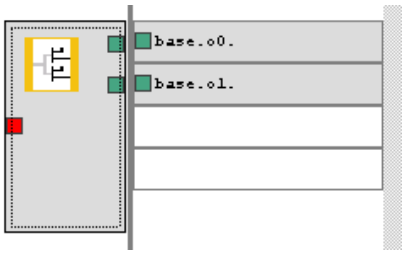
Single output	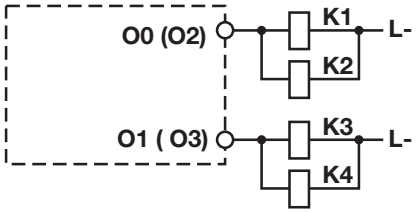	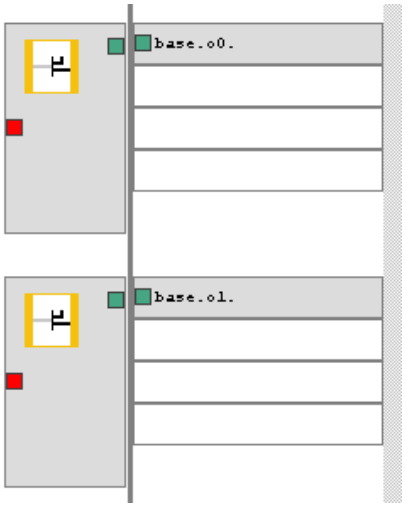

Connection examples for semiconductor outputs

Base units
PNOZ m2p

Redundant output	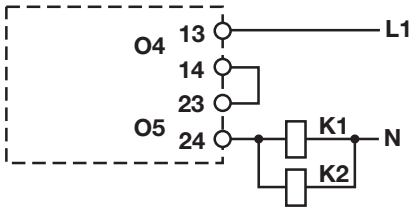	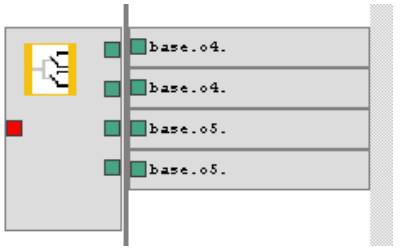
Single output	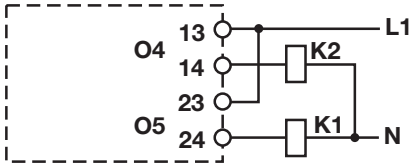	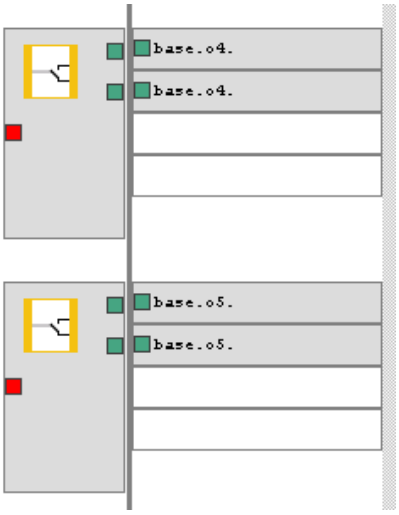

Connection examples for relay outputs

Feedback loop	Redundant output
Contacts from external contactors	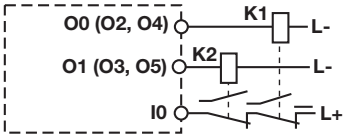 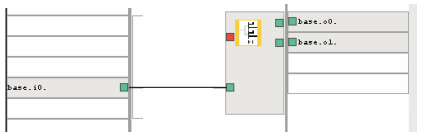

Connection examples for feedback loop

Base units
PNOZ m2p

Connection example

Dual-channel E-STOP and safety gate wiring, monitored start (I17), feedback loop (I14), cascading output as auxiliary output (CO+/A2)

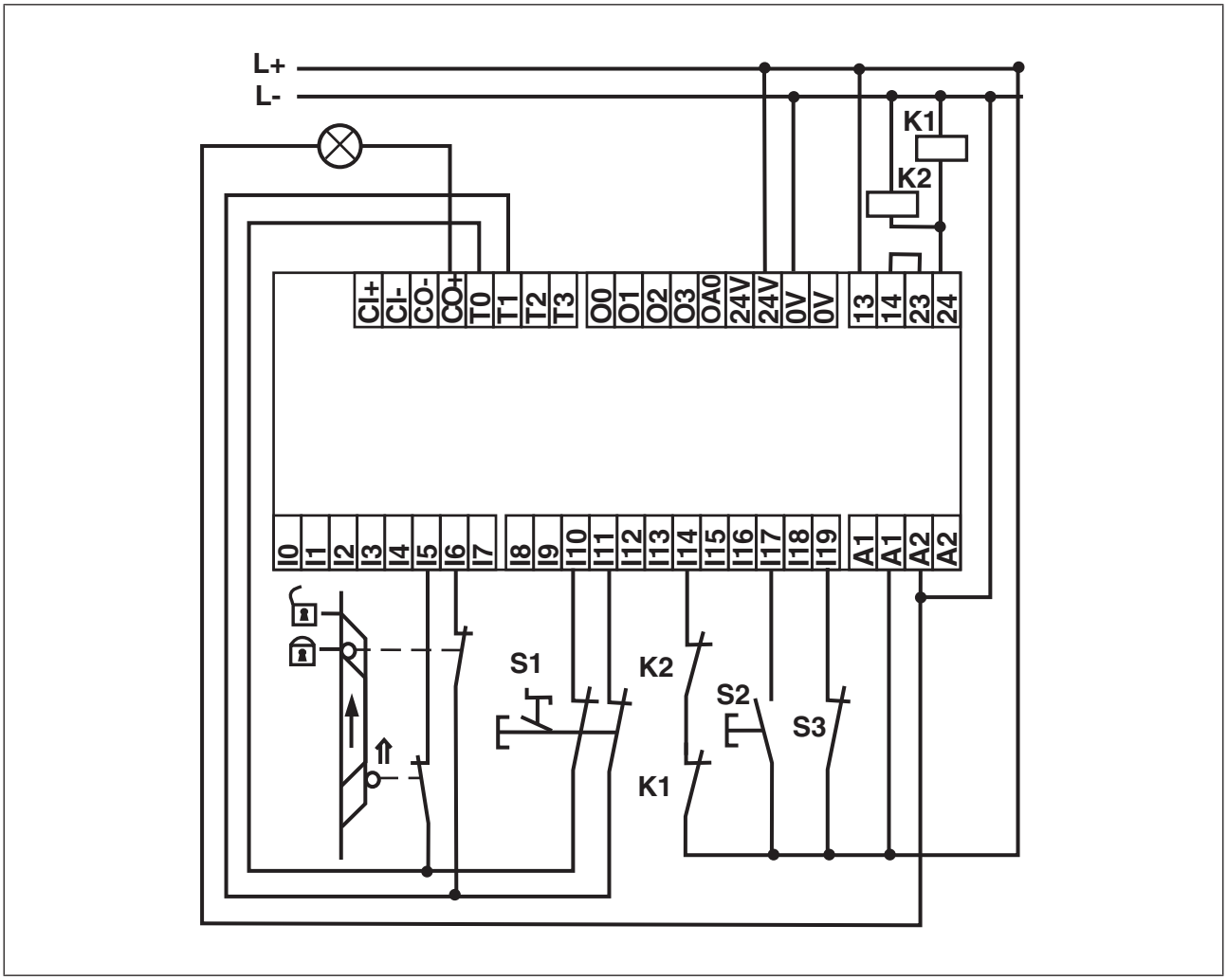

Base units
PNOZ m2p

Technical Details

General	773120	773123
Certifications	BG, CCC, CE, EAC (Eurasian), KCC, KOSHA, TÜV, cULus Listed	BG, CCC, CE, EAC (Eurasian), KCC, TÜV, cULus Listed
Electrical data	**773120**	**773123**
Supply voltage		
for	Supply to the system	Supply to the system
Voltage	24 V	24 V
Kind	DC	DC
Voltage tolerance	-15 %/+20 %	-15 %/+20 %
Output of external power supply (DC) at no load	8 W	9 W
Residual ripple DC	5 %	5 %
Supply voltage		
for	Supply to the SC outputs	Supply to the SC outputs
Voltage	24 V	24 V
Kind	DC	DC
Voltage tolerance	-15 %/+20 %	-15 %/+20 %
Output of external power supply (DC)	192 W	192 W
Residual ripple DC	5 %	5 %
Potential isolation	yes	yes
Supply voltage		
Power consumption per expansion module	2,5 W	2,5 W
Status indicator	LED	LED
Inputs	**773120**	**773123**
Number	20	20
Max. number of live inputs within the max. permitted ambient temperature (see "Environmental data")	U_B <= 26,4 V : 20, U_B > 26,4 V : 15	U_B <= 26,4 V : 20, U_B > 26,4 V : 15
Signal level at "0"	-3 - +5 V DC	-3 - +5 V DC
Signal level at "1"	15 - 30 V DC	15 - 30 V DC
Input voltage in accordance with EN 61131-2 Type 1	24 V DC	24 V DC
Input current at rated voltage	8 mA	8 mA
Min. pulse duration	18 ms	18 ms
Pulse suppression	0,6 ms	0,6 ms
Maximum input delay	4 ms	4 ms
Potential isolation	No	No

Base units
PNOZ m2p

Semiconductor outputs	773120	773123
Number	4	4
Switching capability		
Voltage	24 V	24 V
Current	2 A	2 A
Power	48 W	48 W
Signal level at "1"	UB - 0.5 VDC at 2 A	UB - 0.5 VDC at 2 A
Residual current at "0"	0,5 mA	0,5 mA
Max. capacitive load	1 µF	1 µF
Max. duration of off time during self test	300 µs	300 µs
Switch-off delay	30 ms	30 ms
Potential isolation	yes	yes
Short circuit-proof	yes	yes
Semiconductor outputs (standard)	**773120**	**773123**
Number	1	1
Switching capability		
Voltage	24 V	24 V
Current	0,5 A	0,5 A
Power	12 W	12 W
Galvanic isolation	yes	yes
Short circuit-proof	yes	yes
Residual current at "0"	0,5 mA	0,5 mA
Signal level at "1"	UB - 0.5 VDC at 0.5 A	UB - 0.5 VDC at 0.5 A
Test pulse outputs	**773120**	**773123**
Number of test pulse outputs	4	4
Voltage	24 V	24 V
Current	0,5 A	0,5 A
Max. duration of off time during self test	5 ms	5 ms
Short circuit-proof	yes	yes
Potential isolation	No	No
Relay outputs	**773120**	**773123**
Utilisation category		
In accordance with the standard	EN 60947-4-1	EN 60947-4-1

Base units
PNOZ m2p

Relay outputs	773120	773123
Utilisation category of safety contacts		
AC1 at	**240 V**	**240 V**
Max. current	**6 A**	**6 A**
Max. power	**1440 VA**	**1440 VA**
DC1 at	**24 V**	**24 V**
Max. current	**6 A**	**6 A**
Max. power	**144 W**	**144 W**
Utilisation category		
In accordance with the standard	**EN 60947-5-1**	**EN 60947-5-1**
Utilisation category of safety contacts		
AC15 at	**230 V**	**230 V**
Max. current	**3 A**	**3 A**
Max. power	**690 W**	**690 W**
DC13 (6 cycles/min) at	**24 V**	**24 V**
Max. current	**3 A**	**3 A**
Max. power	**72 W**	**72 W**
Airgap creepage between		
Relay contacts	**3 mm**	**3 mm**
Relay contacts and other circuits	**5,5 mm**	**5,5 mm**
External contact fuse protection, safety contacts		
In accordance with the standard	**EN 60947-5-1**	**EN 60947-5-1**
Blow-out fuse, quick	**6 A**	**6 A**
Blow-out fuse, slow	**6 A**	**6 A**
Circuit breaker 24V AC/DC, characteristic B/C	**6 A**	**6 A**
Switch-off delay	**50 ms**	**50 ms**
Potential isolation	**yes**	**yes**
Cascading output as standard output	**773120**	**773123**
Number	**1**	**1**
Switching capability		
Voltage	**24 V**	**24 V**
Current	**0,2 A**	**0,2 A**
Power	**4,8 W**	**4,8 W**
Galvanic isolation	**No**	**No**
Short circuit-proof	**yes**	**yes**
Residual current at "0"	**0,5 mA**	**0,5 mA**
Ethernet interface	**773120**	**773123**
Number	–	**2**

Base units
PNOZ m2p

Serial interface	773120	773123
Number of RS232 interfaces	1	–
Times	**773120**	**773123**
Switch-on delay	5 s	5 s
Supply interruption before de-energisation	20 ms	20 ms
Simultaneity, channel 1 and 2 max.	3 s	3 s
Simultaneity in the two-hand circuit	0,5 s	0,5 s
Max. cycle time of the device	15 ms	15 ms
Max. processing time for data communication	–	50 ms
Environmental data	**773120**	**773123**
Ambient temperature		
In accordance with the standard	EN 60068-2-14	EN 60068-2-14
Temperature range	0 - 60 °C	0 - 60 °C
Forced convection in control cabinet off	55 °C	55 °C
Storage temperature		
In accordance with the standard	EN 60068-2-1/-2	EN 60068-2-1/-2
Temperature range	-25 - 70 °C	-25 - 70 °C
Climatic suitability		
In accordance with the standard	EN 60068-2-30, EN 60068-2-78	EN 60068-2-30, EN 60068-2-78
Humidity	93 % r. h. at 40 °C	93 % r. h. at 40 °C
Condensation during operation	Not permitted	Not permitted
EMC	EN 61131-2	EN 61131-2
Vibration		
In accordance with the standard	EN 60068-2-6	EN 60068-2-6
Frequency	10 - 150 Hz	10 - 150 Hz
Acceleration	1g	1g
Shock stress		
In accordance with the standard	EN 60068-2-27	EN 60068-2-27
Acceleration	15g	15g
Duration	11 ms	11 ms
Max. operating height above sea level	2000 m	2000 m
Airgap creepage		
In accordance with the standard	EN 61131-2	EN 61131-2
Overvoltage category	III	III
Pollution degree	2	2
Rated insulation voltage	250 V	250 V
Rated impulse withstand voltage	6 kV	6 kV

Base units
PNOZ m2p

Environmental data	773120	773123
Protection type		
In accordance with the standard	**EN 60529**	**EN 60529**
Mounting area (e.g. control cabinet)	**IP54**	**IP54**
Housing	**IP20**	**IP20**
Terminals	**IP20**	**IP20**
Potential isolation	**773120**	**773123**
Potential isolation between	**SC output and system voltage**	**SC output and system voltage**
Type of potential isolation	**Protective separation**	**Protective separation**
Rated surge voltage	**2500 V**	**2500 V**
Potential isolation between	**Relay output and system voltage**	**Relay output and system voltage**
Type of potential isolation	**Protective separation**	**Protective separation**
Rated surge voltage	**6000 V**	**6000 V**
Mechanical data	**773120**	**773123**
Mounting position	**horizontally on mounting rail**	**horizontally on mounting rail**
DIN rail		
Top hat rail	**35 x 7,5 EN 50022**	**35 x 7,5 EN 50022**
Recess width	**27 mm**	**27 mm**
Max. cable length		
Max. cable length per input	**1 km**	**1 km**
Sum of individual cable lengths at the test pulse output	**40 km**	**40 km**
Material		
Bottom	**PPO UL 94 V0**	**PPO UL 94 V0**
Front	**ABS UL 94 V0**	**ABS UL 94 V0**
Connection type	**Spring-loaded terminal, screw terminal**	**Spring-loaded terminal, screw terminal**
Conductor cross section with screw terminals		
1 core flexible	**0,25 - 1,5 mm², 24 - 16 AWG**	**0,25 - 1,5 mm², 24 - 16 AWG**
2 core with the same cross section, flexible without crimp connectors or with TWIN crimp connectors	**0,25 - 0,75 mm², 24 - 20 AWG**	**0,25 - 0,75 mm², 24 - 20 AWG**
Conductor cross section with screw terminals (relay outputs)		
1 core flexible	**0,25 - 2,5 mm², 24 - 12 AWG**	**0,25 - 2,5 mm², 24 - 12 AWG**
2 core with the same cross section, flexible without crimp connectors or with TWIN crimp connectors	**0,25 - 1,5 mm², 24 - 16 AWG**	**0,25 - 1,5 mm², 24 - 16 AWG**
Torque setting with screw terminals	**0,25 Nm**	**0,25 Nm**

Base units
PNOZ m2p

Mechanical data	773120	773123
Torque setting with screw terminals (relay outputs)	**0,5 Nm**	**0,5 Nm**
Stripping length with screw terminals	**7 mm**	**7 mm**
Stripping length with screw terminals (relay outputs)	**8 mm**	**8 mm**
Conductor cross section with spring-loaded terminals		
1 core flexible without crimp connector	**0,25 - 1,5 mm², 24 - 16 AWG**	**0,25 - 1,5 mm², 24 - 16 AWG**
1 core flexible with crimp connector	**0,25 - 0,75 mm², 24 - 20 AWG**	**0,25 - 0,75 mm², 24 - 20 AWG**
Conductor cross section with spring-loaded terminals (relay outputs)		
1 core flexible without crimp connector	**0,25 - 2,5 mm², 24 - 12 AWG**	**0,25 - 2,5 mm², 24 - 12 AWG**
1 core flexible with crimp connector	**0,25 - 1,5 mm², 24 - 16 AWG**	**0,25 - 1,5 mm², 24 - 16 AWG**
Spring-loaded terminals: Terminal points per connection	**1**	**1**
Stripping length with spring-loaded terminals	**9 mm**	**9 mm**
Stripping length with spring-loaded terminals (relay outputs)	**10 mm**	**10 mm**
Dimensions		
Height	**94 mm**	**94 mm**
Width	**135 mm**	**135 mm**
Depth	**121 mm**	**121 mm**
Weight	**499 g**	**521 g**

Where standards are undated, the 2020-07 latest editions shall apply.

Base units
PNOZ m2p

Safety characteristic data

Unit	Operating mode	EN ISO 13849-1: 2015 PL	EN ISO 13849-1: 2015 Category	EN 62061 SIL CL	EN 62061 PFH_D [1/h]	EN ISO 13849-1: 2015 T_M [year]
Logic						
CPU	**2-channel**	**PL e**	**Cat. 4**	**SIL CL 3**	**4,90E-09**	**20**
Expansion	–	**PL e**	**Cat. 4**	**SIL CL 3**	**9,20E-09**	**20**
Input						
SC inputs	**1-channel**	**PL d**	**Cat. 2**	**SIL CL 2**	**2,50E-09**	**20**
SC inputs	**2-channel**	**PL e**	**Cat. 4**	**SIL CL 3**	**2,90E-10**	**20**
SC inputs	**Short circuit-forming safety mats**	**PL d**	**Cat. 3**	**SIL CL 2**	**1,81E-09**	**20**
SC inputs	**1-ch., pulsed light barrier**	**PL e**	**Cat. 4**	**SIL CL 3**	**2,50E-10**	**20**
Cascad. inputs	–	**PL e**	**Cat. 4**	**SIL CL 3**	**3,10E-10**	**20**
Output						
SC outputs	**1-channel**	**PL d**	**Cat. 2**	**SIL CL 2**	**7,00E-09**	**20**
SC outputs	**2-channel**	**PL e**	**Cat. 4**	**SIL CL 3**	**8,60E-10**	**20**
Cascad. outputs	–	**PL e**	**Cat. 4**	**SIL CL 3**	**4,91E-10**	**20**
Relay outputs	**1-channel**	**PL c**	**Cat. 1**	**-**	**2,90E-08**	**20**
Relay outputs	**2-channel**	**PL e**	**Cat. 4**	**SIL CL 3**	**3,00E-10**	**20**

All the units used within a safety function must be considered when calculating the safety characteristic data.

The PFH value depends on the switch frequency and the load of the relay output.
If the service life graphs are not accessible, the stated PFH value can be used irrespective of the switch frequency and the load, as the PFH value already considers the relay's B10d value as well as the failure rates of the other components.

Base units
PNOZ m2p

Supplementary data

Service life graph for the relay contacts

The service life graphs indicate the number of cycles from which failures due to wear must be expected. The wear is mainly caused by the electrical load; the mechanical load is negligible.

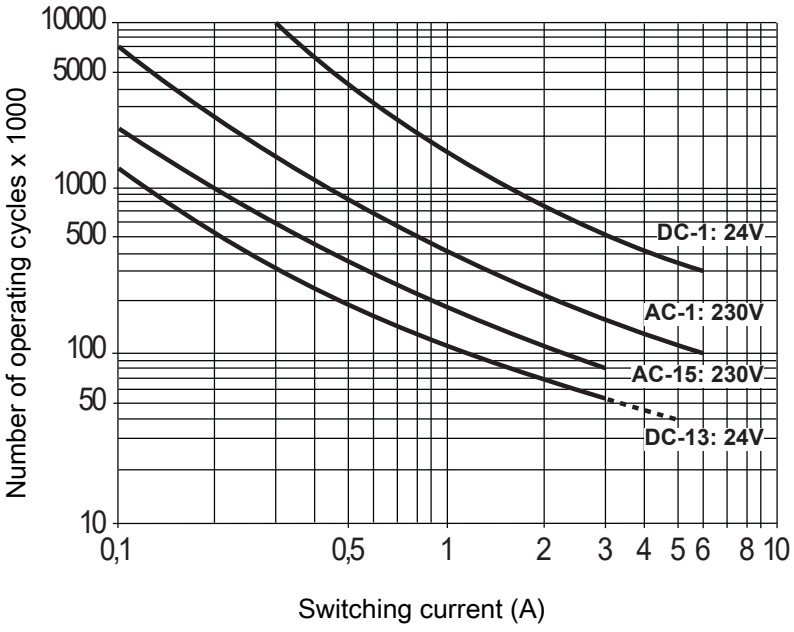

Fig.: Service life graphs at 24 VDC and 230 VAC

Base units
PNOZ m2p

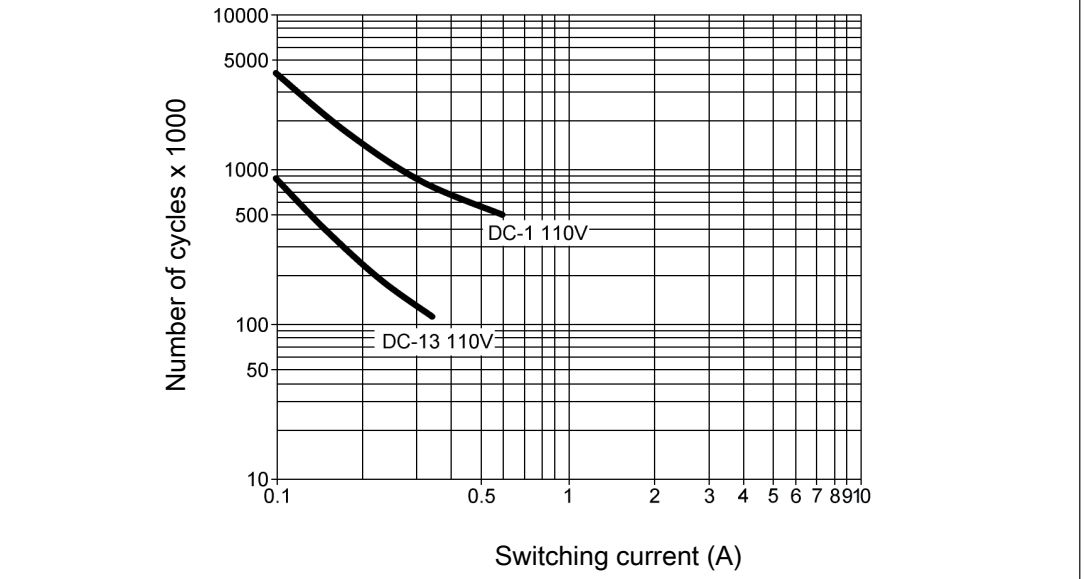

Fig.: Service life graphs at 110 VDC

Example

- Inductive load: 0.2 A
- Utilisation category: AC15
- Contact service life: 1 000 000 cycles

Provided the application to be implemented requires fewer than 1 000 000 cycles, the PFH value (see Technical details [📖 135]) can be used in the calculation.

To increase the service life, sufficient spark suppression must be provided on all relay contacts. With capacitive loads, any power surges that occur must be noted. With DC contactors, use flywheel diodes for spark suppression.

We recommend you use semiconductor outputs to switch 24 VDC loads.

Base units
PNOZ m2p

Order reference

Product

Product type	Features	Order no.
PNOZ m2p	Base unit	773 120
PNOZ m2p ETH	Base unit, Ethernet interface	773 123

Accessories

Connection terminals

Product type	Features	Order No.
Set spring terminals	1 set of spring-loaded terminals	783 100
Set screw terminals	1 set of screw terminals	793 100

Terminator, jumper

Product type	Features	Order no.
PNOZmulti bus terminator	Terminator	779 110
KOP-XE	Jumper	774 639

Base units
PNOZ m3p

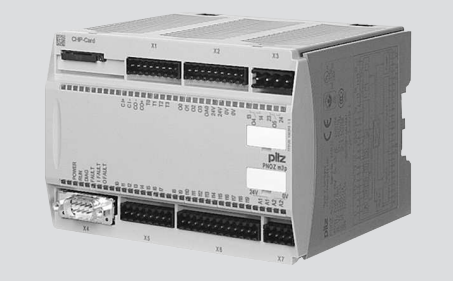

Overview

Unit features

Application of the product PNOZ m3p:

Base unit from the configurable control system PNOZmulti

The product has the following features:

- Designed to monitor and control furnaces
- Can be configured in the PNOZmulti Configurator
- Positive-guided relay outputs:
  - 2 safety outputs
    Depending on the application, up to PL e of EN ISO 13849-1 and up to SIL CL 3 of EN IEC 62061
- Semiconductor outputs:
  - 4 safety outputs
    Depending on the application, up to PL e of EN ISO 13849-1 and up to SIL CL 3 of EN IEC 62061
  - 1 output for standard applications
- 4 test pulse outputs
- 1 cascading input and output;
  can also be used as a standard output
- 20 inputs for connecting, for example:
  - E-STOP pushbuttons
  - Two-hand pushbuttons
  - Safety gate limit switches
  - Start buttons
  - Light beam devices
  - Scanners
  - Enabling switches
  - PSEN

  - Operating mode selector switches
  - Safety mats
- Muting function
- LED indicator for:
  - Diagnostics
  - Supply voltage
  - Output circuits
  - Input circuits
- Test pulse outputs used to monitor shorts across the inputs
- Monitoring of shorts between the safety outputs
- Integrated interfaces:
  - PNOZ m3p: Serial interface RS232
  - PNOZ m3p **ETH**: 2 Ethernet interfaces
- Plug-in connection terminals:
  Either spring-loaded terminal or screw terminal available as an accessory (see Order references for accessories [📖 772]).

Chip card

To be able to use the product you will need a chip card.

Chip cards are available with memories of 8 kByte and 32 kByte. For large-scale projects we recommend the 32 kByte chip card (see Technical Catalogue: Accessories chapter).

Base units
PNOZ m3p

Front view

PNOZ m3p

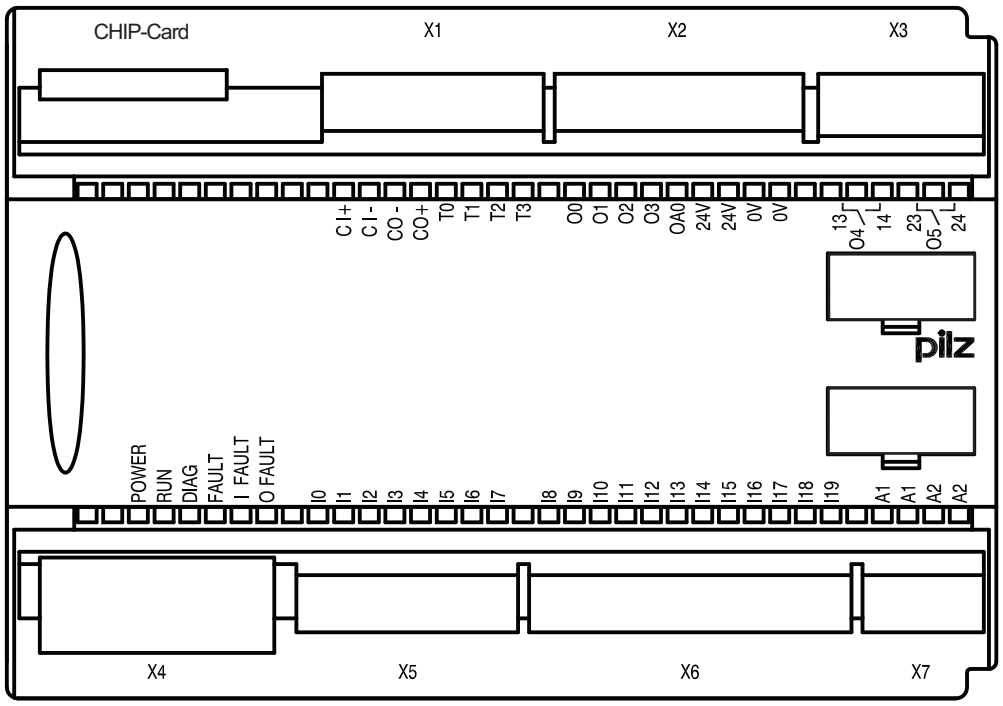

Base units
PNOZ m3p

PNOZ m3p ETH

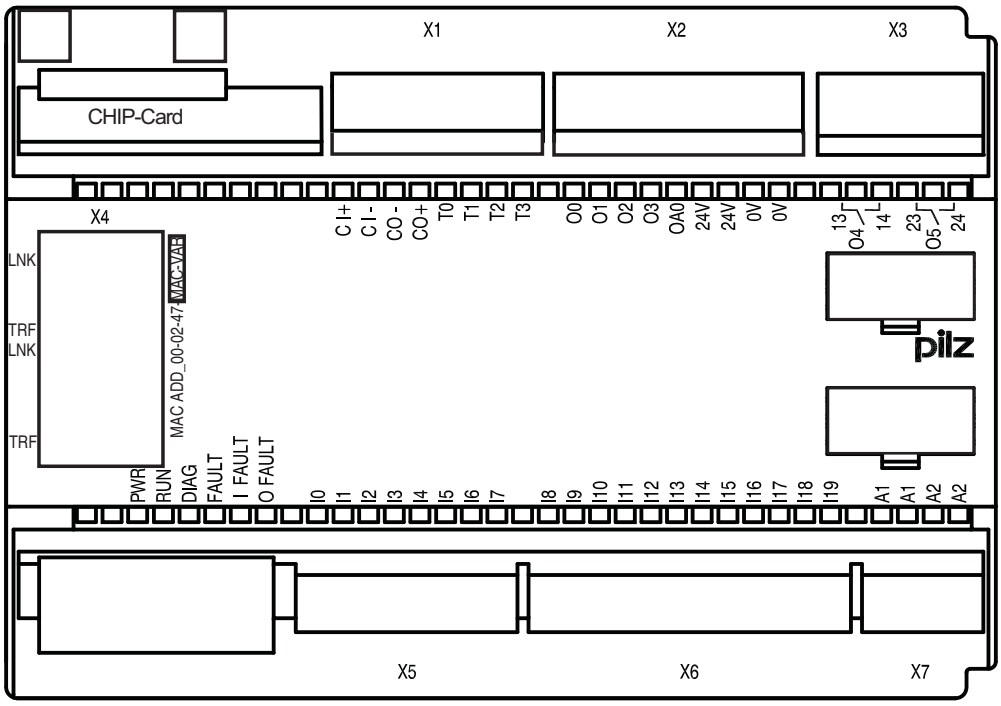

Legend:

- CHIP card:
  - Interface chip card
- X1:
  - Cascading inputs and outputs CI and CO,
  - Test pulse outputs T0 ... T3
- X2:
  - Semiconductor outputs O0 ... O3,
  - Auxiliary output OA0,
  - Supply connections
- X3:
  - Relay outputs O4 and O5
- X4:
  - RS232 interface / Ethernet interface
- X5, X6:
  - Inputs I0 ... I19

- X7:
  - Power supply
- LEDs:
  - PWR
  - RUN
  - DIAG
  - FAULT
  - I FAULT
  - O FAULT

Function description

Functions

The function of the inputs and outputs on the control system depends on the safety circuit created using the PNOZmulti Configurator. A chip card is used to download the safety circuit to the base unit. The base unit has 2 microcontrollers that monitor each other. They evaluate the input circuits on the base unit and expansion modules and switch the outputs on the base unit and expansion modules accordingly.

The LEDs on the base unit and expansion modules indicate the status of the configurable control system PNOZmulti.

The online help on the PNOZmulti Configurator contains descriptions of the operating modes and all the functions of the control system, plus connection examples.

Application for furnaces

The base unit PNOZ m3p is designed for controlling and monitoring furnaces (see online help for the PNOZmulti Configurator).

These include:

Monitoring:

- Safety chains
- Combustion air pressure
- Ignition
- Flame monitoring
- External compound controller
- Tightness control

and controlling:

- Safety valves
- Ignition valves

Base units
PNOZ m3p

- Vent valve
- Ignition
- External compound controller
- Combustion air blower

The following oil and gas burner types can be monitored:

- Master burner with direct ignition
- Master burner with indirect ignition and joint flame monitoring
- Master burner with indirect ignition and separate flame monitoring
- Slave burner with direct ignition
- Slave burner with indirect ignition and joint flame monitoring
- Slave burner with indirect ignition and separate flame monitoring

Block diagram

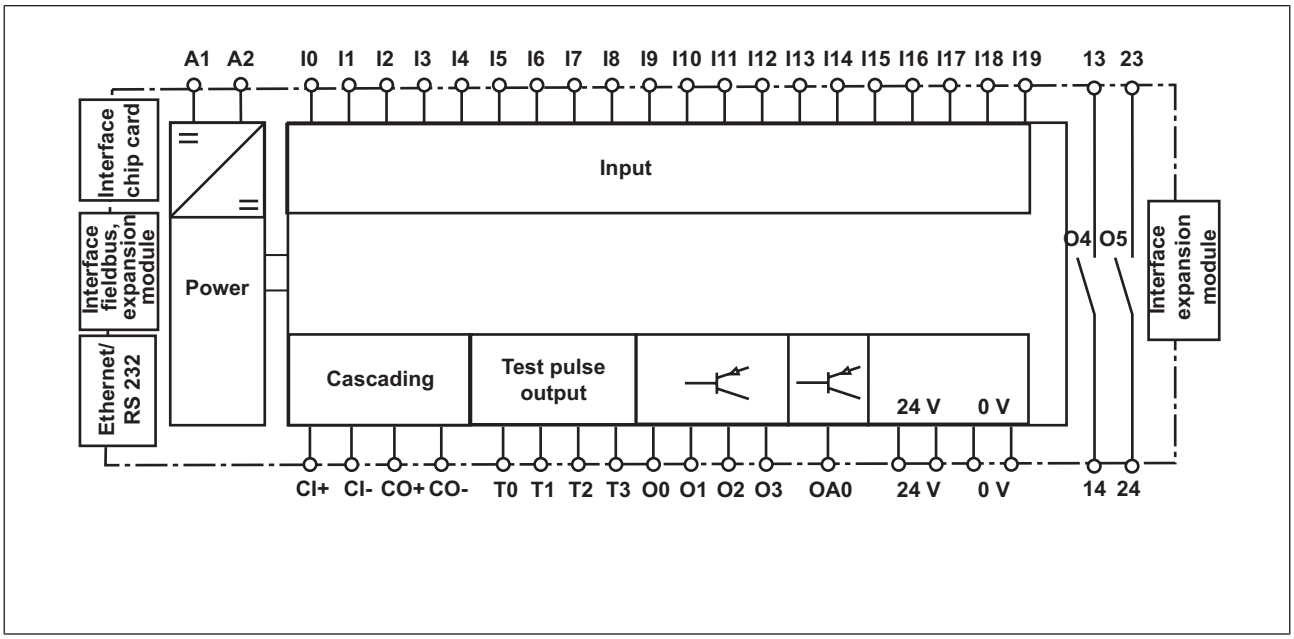

Base units
PNOZ m3p

Installation

Dimensions

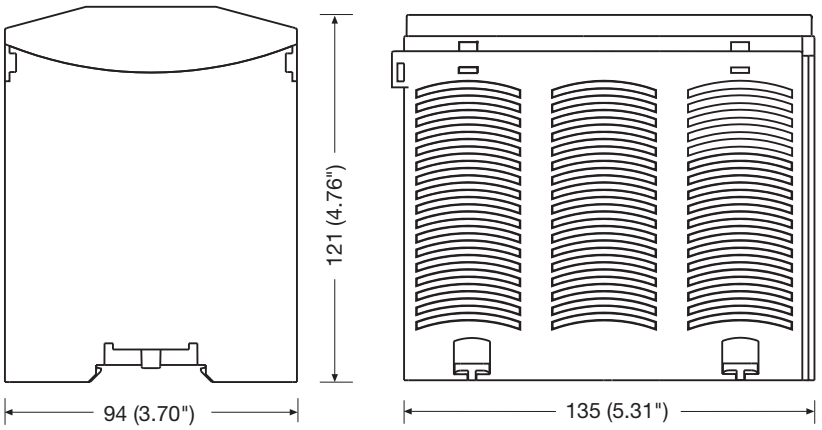

Commissioning

General wiring guidelines

The wiring is defined in the circuit diagram in the Configurator. There you can select the inputs that are to perform a safety function and the outputs that are to switch this safety function.

Please note:

- Information given in the Technical details [📖 156] must be followed.
- Outputs:
  - O0 to O5 are safety outputs
  - O4 and O5 are relay outputs
  - O0 to O3 are semiconductor outputs
  - OA0 is an output to delete a project from the base unit (see online help for the PNOZmutli Configurator).
- To prevent contact welding, a fuse should be connected before the output contacts (see technical details).
- Use copper wiring with a temperature stability of 75°C.
- Adequate protection must be provided on all output contacts with inductive loads.
- The control system and input circuits must always be supplied by a single power supply. The power supply must meet the regulations for extra low voltages with protective separation.

Base units
PNOZ m3p

- Two connection terminals are available for each of the supply connections 24 V and 0 V (semiconductor outputs), plus A1 and A2 (power supply). This means that the supply voltage can be looped through several connections. When the supply voltage is looped, the current at each terminal may not exceed 3 A.
- Test pulse outputs must exclusively be used to test the inputs. They must not be used to drive loads.
  Do not route the test pulse lines together with actuator cables within an unprotected multicore cable.
- Test pulse outputs are also used to supply safety mats that trigger a short circuit.
  Test pulses that are used for the safety mat may not be reused for other purposes.

The base unit PNOZ m3p is not suitable for connection to DC supplies.

Connection

Supply voltage	AC	DC
For the safety system (connector X7)	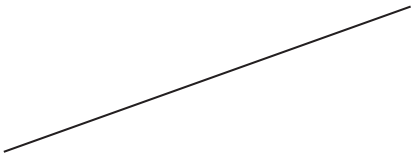	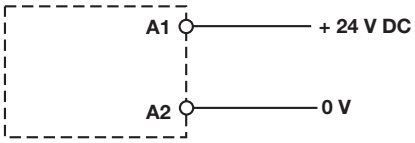
For the semiconductor outputs (connector X2) Must always be present, even if the semiconductor outputs are not used	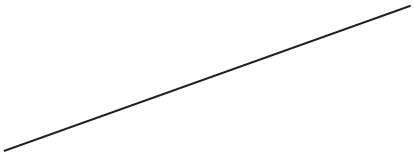	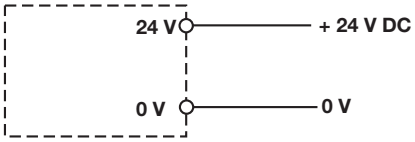

Supply voltage

Input circuit	Single-channel	Dual-channel
E-STOP **without** detection of shorts across contacts	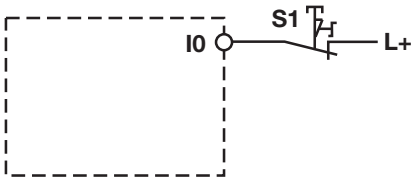	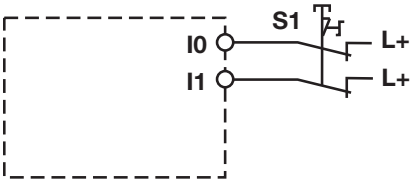
E-STOP **with** detection of shorts across contacts	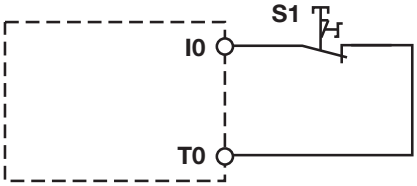	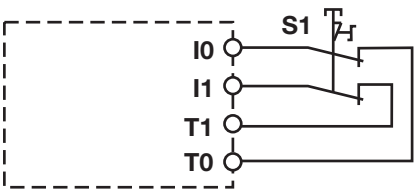

Connection examples for the input circuit

Base units
PNOZ m3p

Start circuit	Input circuit without detection of shorts across contacts	Input circuit with detection of shorts across contacts
	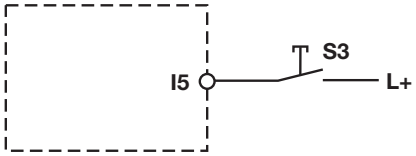	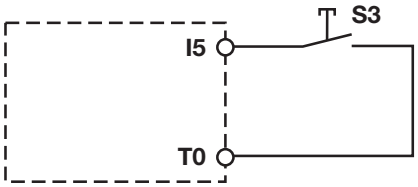

Connection examples for start circuit

Redundant output	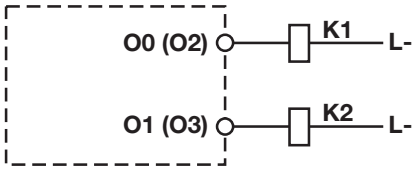	
Single output	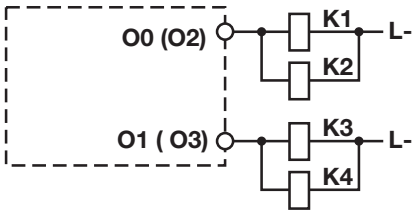	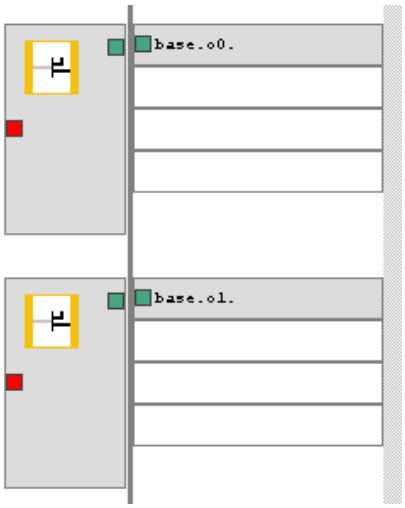

Connection examples for semiconductor outputs

Base units
PNOZ m3p

Redundant output	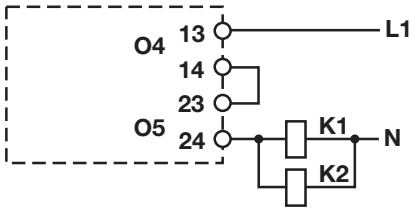	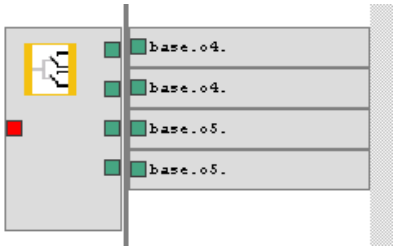
Single output	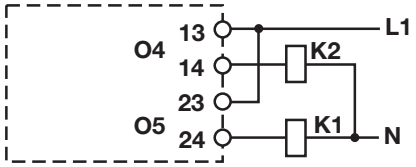	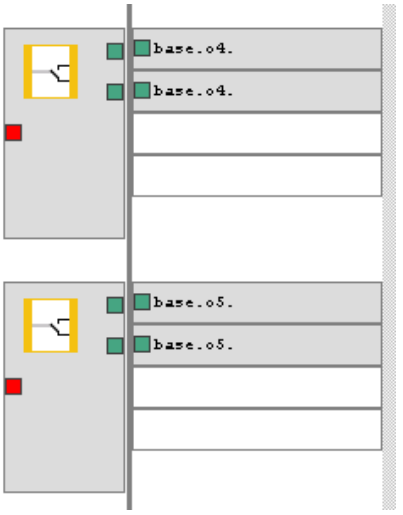

Connection examples for relay outputs

Feedback loop	Redundant output
Contacts from external contactors	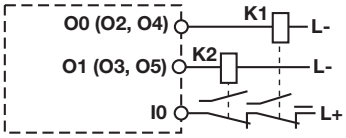 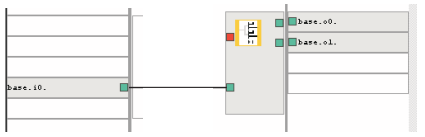

Connection examples for feedback loop

Base units
PNOZ m3p

Connection example

Dual-channel E-STOP and safety gate wiring, monitored start (I17), feedback loop (I14), cascading output as auxiliary output (CO+/A2)

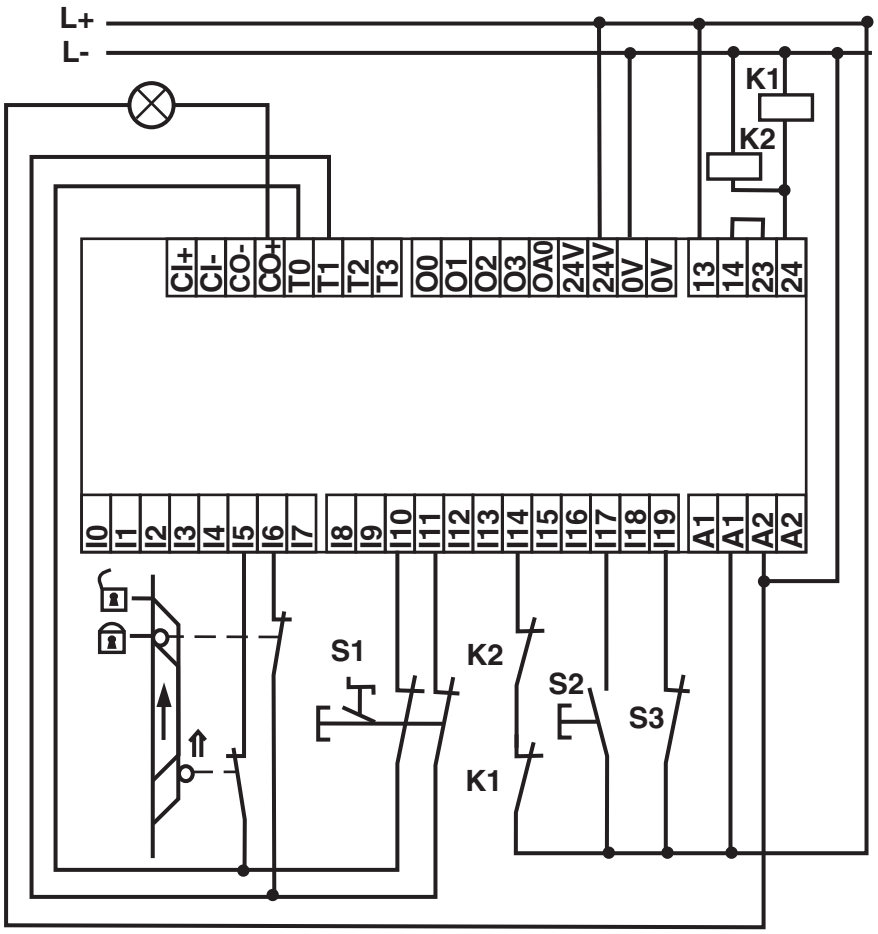

Base units
PNOZ m3p

Technical Details

General	773125	773126
Certifications	BG, CCC, CE, EAC (Eurasian), KCC, KOSHA, cULus Listed	BG, CCC, CE, EAC (Eurasian), KCC, cULus Listed
Electrical data	**773125**	**773126**
Supply voltage		
for	Supply to the system	Supply to the system
Voltage	24 V	24 V
Kind	DC	DC
Voltage tolerance	-15 %/+20 %	-15 %/+20 %
Output of external power supply (DC) at no load	8 W	9 W
Residual ripple DC	5 %	5 %
Supply voltage		
for	Supply to the SC outputs	Supply to the SC outputs
Voltage	24 V	24 V
Kind	DC	DC
Voltage tolerance	-15 %/+20 %	-15 %/+20 %
Output of external power supply (DC)	192 W	192 W
Residual ripple DC	5 %	5 %
Potential isolation	yes	yes
Supply voltage		
Power consumption per expansion module	2,5 W	2,5 W
Status indicator	LED	LED
Inputs	**773125**	**773126**
Number	20	20
Max. number of live inputs within the max. permitted ambient temperature (see "Environmental data")	U_B <= 26,4 V : 20, U_B > 26,4 V : 15	U_B <= 26,4 V : 20, U_B > 26,4 V : 15
Signal level at "0"	-3 - +5 V DC	-3 - +5 V DC
Signal level at "1"	15 - 30 V DC	15 - 30 V DC
Input voltage in accordance with EN 61131-2 Type 1	24 V DC	24 V DC
Input current at rated voltage	8 mA	8 mA
Min. pulse duration	18 ms	18 ms
Pulse suppression	0,6 ms	0,6 ms
Maximum input delay	4 ms	4 ms
Potential isolation	No	No

Base units
PNOZ m3p

Semiconductor outputs	773125	773126
Number	4	4
Switching capability		
Voltage	24 V	24 V
Current	2 A	2 A
Power	48 W	48 W
Signal level at "1"	UB - 0.5 VDC at 2 A	UB - 0.5 VDC at 2 A
Residual current at "0"	0,5 mA	0,5 mA
Max. capacitive load	1 µF	1 µF
Max. duration of off time during self test	300 µs	300 µs
Switch-off delay	30 ms	30 ms
Potential isolation	yes	yes
Short circuit-proof	yes	yes
Semiconductor outputs (standard)	**773125**	**773126**
Number	1	1
Switching capability		
Voltage	24 V	24 V
Current	0,5 A	0,5 A
Power	12 W	12 W
Galvanic isolation	yes	yes
Short circuit-proof	yes	yes
Residual current at "0"	0,5 mA	0,5 mA
Signal level at "1"	UB - 0.5 VDC at 0.5 A	UB - 0.5 VDC at 0.5 A
Test pulse outputs	**773125**	**773126**
Number of test pulse outputs	4	4
Voltage	24 V	24 V
Current	0,5 A	0,5 A
Max. duration of off time during self test	5 ms	5 ms
Short circuit-proof	yes	yes
Potential isolation	No	No
Relay outputs	**773125**	**773126**
Utilisation category		
In accordance with the standard	EN 60947-4-1	EN 60947-4-1

Base units
PNOZ m3p

Relay outputs	773125	773126
Utilisation category of safety contacts		
AC1 at	**240 V**	**240 V**
Max. current	**6 A**	**6 A**
Max. power	**1440 VA**	**1440 VA**
DC1 at	**24 V**	**24 V**
Max. current	**6 A**	**6 A**
Max. power	**144 W**	**144 W**
Utilisation category		
In accordance with the standard	**EN 60947-5-1**	**EN 60947-5-1**
Utilisation category of safety contacts		
AC15 at	**230 V**	**230 V**
Max. current	**3 A**	**3 A**
Max. power	**690 W**	**690 W**
DC13 (6 cycles/min) at	**24 V**	**24 V**
Max. current	**3 A**	**3 A**
Max. power	**72 W**	**72 W**
Airgap creepage between		
Relay contacts	**3 mm**	**3 mm**
Relay contacts and other circuits	**5,5 mm**	**5,5 mm**
External contact fuse protection, safety contacts		
In accordance with the standard	**EN 60947-5-1**	**EN 60947-5-1**
Blow-out fuse, quick	**6 A**	**6 A**
Blow-out fuse, slow	**6 A**	**6 A**
Circuit breaker 24V AC/DC, characteristic B/C	**6 A**	**6 A**
Switch-off delay	**50 ms**	**50 ms**
Potential isolation	**yes**	**yes**
Cascading output as standard output	**773125**	**773126**
Number	**1**	**1**
Switching capability		
Voltage	**24 V**	**24 V**
Current	**0,2 A**	**0,2 A**
Power	**4,8 W**	**4,8 W**
Galvanic isolation	**No**	**No**
Short circuit-proof	**yes**	**yes**
Residual current at "0"	**0,5 mA**	**0,5 mA**
Ethernet interface	**773125**	**773126**
Number	–	**2**

Base units
PNOZ m3p

Serial interface	773125	773126
Number of RS232 interfaces	1	–
Times	**773125**	**773126**
Switch-on delay	5 s	5 s
Supply interruption before de-energisation	20 ms	20 ms
Simultaneity, channel 1 and 2 max.	3 s	3 s
Simultaneity in the two-hand circuit	0,5 s	0,5 s
Max. cycle time of the device	15 ms	15 ms
Max. processing time for data communication	–	50 ms
Environmental data	**773125**	**773126**
Ambient temperature		
In accordance with the standard	EN 60068-2-14	EN 60068-2-14
Temperature range	0 - 60 °C	0 - 60 °C
Forced convection in control cabinet off	55 °C	55 °C
Storage temperature		
In accordance with the standard	EN 60068-2-1/-2	EN 60068-2-1/-2
Temperature range	-25 - 70 °C	-25 - 70 °C
Climatic suitability		
In accordance with the standard	EN 60068-2-30, EN 60068-2-78	EN 60068-2-30, EN 60068-2-78
Humidity	93 % r. h. at 40 °C	93 % r. h. at 40 °C
Condensation during operation	Not permitted	Not permitted
EMC	EN 61131-2	EN 61131-2
Vibration		
In accordance with the standard	EN 60068-2-6	EN 60068-2-6
Frequency	10 - 150 Hz	10 - 150 Hz
Acceleration	1g	1g
Shock stress		
In accordance with the standard	EN 60068-2-27	EN 60068-2-27
Acceleration	15g	15g
Duration	11 ms	11 ms
Max. operating height above sea level	2000 m	2000 m
Airgap creepage		
In accordance with the standard	EN 61131-2	EN 61131-2
Overvoltage category	III	III
Pollution degree	2	2
Rated insulation voltage	250 V	250 V
Rated impulse withstand voltage	6 kV	6 kV

Base units
PNOZ m3p

Environmental data	773125	773126
Protection type		
In accordance with the standard	**EN 60529**	**EN 60529**
Mounting area (e.g. control cabinet)	**IP54**	**IP54**
Housing	**IP20**	**IP20**
Terminals	**IP20**	**IP20**
Potential isolation	**773125**	**773126**
Potential isolation between	**SC output and system voltage**	**SC output and system voltage**
Type of potential isolation	**Protective separation**	**Protective separation**
Rated surge voltage	**2500 V**	**2500 V**
Potential isolation between	**Relay output and system voltage**	**Relay output and system voltage**
Type of potential isolation	**Protective separation**	**Protective separation**
Rated surge voltage	**6000 V**	**6000 V**
Mechanical data	**773125**	**773126**
Mounting position	**horizontally on mounting rail**	**horizontally on mounting rail**
DIN rail		
Top hat rail	**35 x 7,5 EN 50022**	**35 x 7,5 EN 50022**
Recess width	**27 mm**	**27 mm**
Max. cable length		
Max. cable length per input	**1 km**	**1 km**
Sum of individual cable lengths at the test pulse output	**40 km**	**40 km**
Material		
Bottom	**PPO UL 94 V0**	**PPO UL 94 V0**
Front	**ABS UL 94 V0**	**ABS UL 94 V0**
Connection type	**Spring-loaded terminal, screw terminal**	**Spring-loaded terminal, screw terminal**
Conductor cross section with screw terminals		
1 core flexible	**0,25 - 1,5 mm², 24 - 16 AWG**	**0,25 - 1,5 mm², 24 - 16 AWG**
2 core with the same cross section, flexible without crimp connectors or with TWIN crimp connectors	**0,25 - 0,75 mm², 24 - 20 AWG**	**0,25 - 0,75 mm², 24 - 20 AWG**
Conductor cross section with screw terminals (relay outputs)		
1 core flexible	**0,25 - 2,5 mm², 24 - 12 AWG**	**0,25 - 2,5 mm², 24 - 12 AWG**
2 core with the same cross section, flexible without crimp connectors or with TWIN crimp connectors	**0,25 - 1,5 mm², 24 - 16 AWG**	**0,25 - 1,5 mm², 24 - 16 AWG**
Torque setting with screw terminals	**0,25 Nm**	**0,25 Nm**

Base units
PNOZ m3p

Mechanical data	773125	773126
Torque setting with screw terminals (relay outputs)	**0,5 Nm**	**0,5 Nm**
Stripping length with screw terminals	**7 mm**	**7 mm**
Stripping length with screw terminals (relay outputs)	**8 mm**	**8 mm**
Conductor cross section with spring-loaded terminals		
1 core flexible without crimp connector	**0,25 - 1,5 mm², 24 - 16 AWG**	**0,25 - 1,5 mm², 24 - 16 AWG**
1 core flexible with crimp connector	**0,25 - 0,75 mm², 24 - 20 AWG**	**0,25 - 0,75 mm², 24 - 20 AWG**
Conductor cross section with spring-loaded terminals (relay outputs)		
1 core flexible without crimp connector	**0,25 - 2,5 mm², 24 - 12 AWG**	**0,25 - 2,5 mm², 24 - 12 AWG**
1 core flexible with crimp connector	**0,25 - 1,5 mm², 24 - 16 AWG**	**0,25 - 1,5 mm², 24 - 16 AWG**
Spring-loaded terminals: Terminal points per connection	**1**	**1**
Stripping length with spring-loaded terminals	**9 mm**	**9 mm**
Stripping length with spring-loaded terminals (relay outputs)	**10 mm**	**10 mm**
Dimensions		
Height	**94 mm**	**94 mm**
Width	**135 mm**	**135 mm**
Depth	**121 mm**	**121 mm**
Weight	**499 g**	**520 g**

Where standards are undated, the 2020-07 latest editions shall apply.

Base units
PNOZ m3p

Safety characteristic data

Unit	Operating mode	EN ISO 13849-1: 2015 PL	EN ISO 13849-1: 2015 Category	EN 62061 SIL CL	EN 62061 PFH_D [1/h]	EN ISO 13849-1: 2015 T_M [year]
Logic						
CPU	**2-channel**	**PL e**	**Cat. 4**	**SIL CL 3**	**4,90E-09**	**20**
Expansion	–	**PL e**	**Cat. 4**	**SIL CL 3**	**9,20E-09**	**20**
Input						
SC inputs	**1-channel**	**PL d**	**Cat. 2**	**SIL CL 2**	**2,50E-09**	**20**
SC inputs	**2-channel**	**PL e**	**Cat. 4**	**SIL CL 3**	**2,90E-10**	**20**
SC inputs	**Short circuit-forming safety mats**	**PL d**	**Cat. 3**	**SIL CL 2**	**1,81E-09**	**20**
SC inputs	**1-ch., pulsed light barrier**	**PL e**	**Cat. 4**	**SIL CL 3**	**2,50E-10**	**20**
Cascad. inputs	–	**PL e**	**Cat. 4**	**SIL CL 3**	**3,10E-10**	**20**
Output						
SC outputs	**1-channel**	**PL d**	**Cat. 2**	**SIL CL 2**	**7,00E-09**	**20**
SC outputs	**2-channel**	**PL e**	**Cat. 4**	**SIL CL 3**	**8,60E-10**	**20**
Cascad. outputs	–	**PL e**	**Cat. 4**	**SIL CL 3**	**4,91E-10**	**20**
Relay outputs	**1-channel**	**PL c**	**Cat. 1**	**-**	**2,90E-08**	**20**
Relay outputs	**2-channel**	**PL e**	**Cat. 4**	**SIL CL 3**	**3,00E-10**	**20**

All the units used within a safety function must be considered when calculating the safety characteristic data.

The PFH value depends on the switch frequency and the load of the relay output.
If the service life graphs are not accessible, the stated PFH value can be used irrespective of the switch frequency and the load, as the PFH value already considers the relay's B10d value as well as the failure rates of the other components.

Base units
PNOZ m3p

Supplementary data

Service life graph for the relay contacts

The service life graphs indicate the number of cycles from which failures due to wear must be expected. The wear is mainly caused by the electrical load; the mechanical load is negligible.

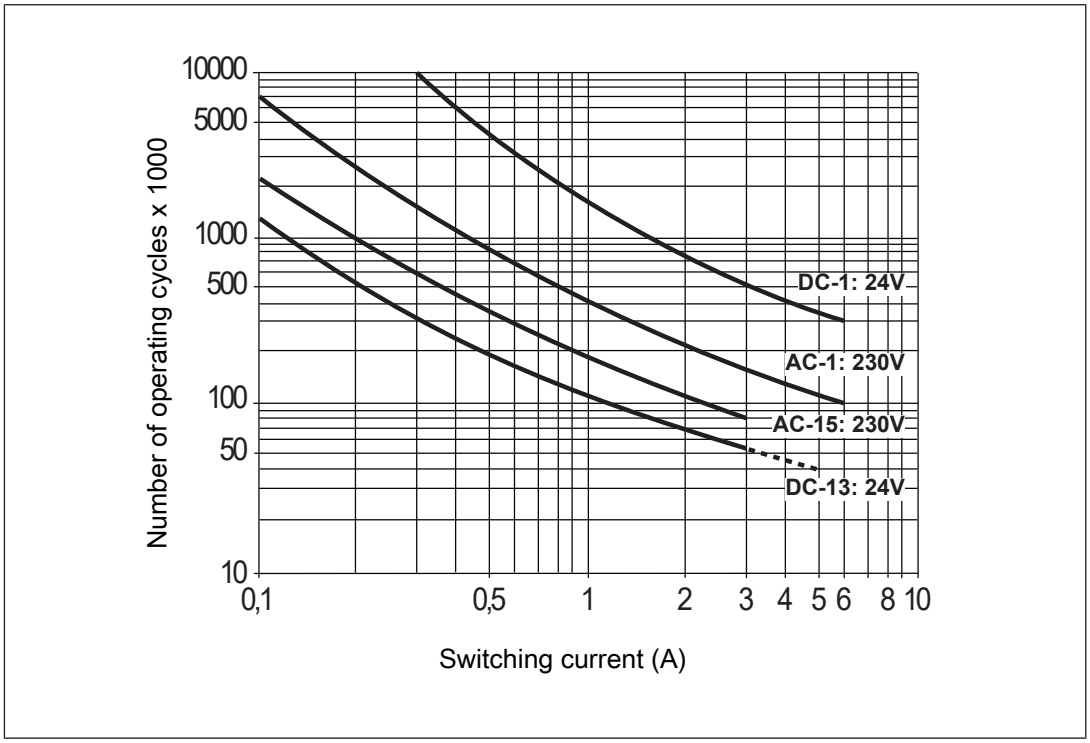

Fig.: Service life graphs at 24 VDC and 230 VAC

Base units
PNOZ m3p

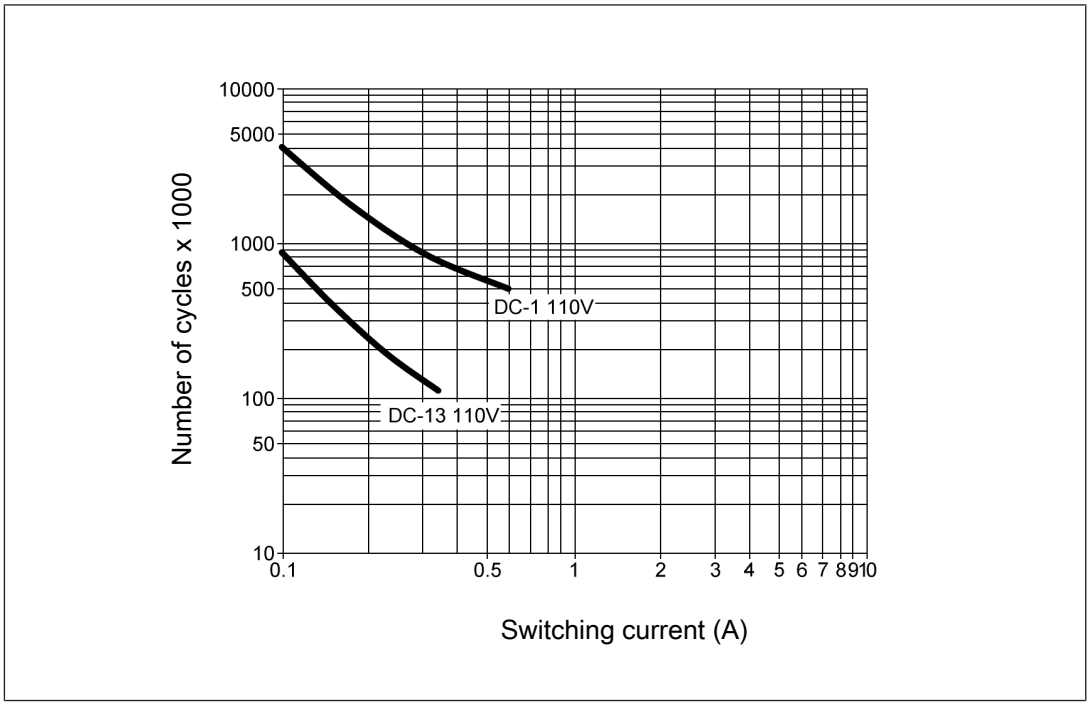

Fig.: Service life graphs at 110 VDC

Example

- Inductive load: 0.2 A
- Utilisation category: AC15
- Contact service life: 1 000 000 cycles

Provided the application to be implemented requires fewer than 1 000 000 cycles, the PFH value (see Technical details [📖 156]) can be used in the calculation.

To increase the service life, sufficient spark suppression must be provided on all relay contacts. With capacitive loads, any power surges that occur must be noted. With DC contactors, use flywheel diodes for spark suppression.

We recommend you use semiconductor outputs to switch 24 VDC loads.

Base units
PNOZ m3p

Order reference

Product

Product type	Features	Order No.
PNOZ m3p	Base unit	773 125
PNOZ m3p ETH	Base unit, Ethernet interface	773 126

Accessories

Connection terminals

Product type	Features	Order No.
Set spring terminals	1 set of spring-loaded terminals	783 100
Set screw terminals	1 set of screw terminals	793 100

Terminator, jumper

Product type	Features	Order no.
PNOZmulti bus terminator	Terminator	779 110
KOP-XE	Jumper	774 639

Input modules
PNOZ mi1p



Overview

Unit features

The product has the following features:

- 8 inputs for connecting:
  - E-STOP pushbuttons
  - Two-hand button
  - Safety gate limit switches
  - Start buttons
  - Light beam devices
  - Scanners
  - Enabling switches
  - PSEN
  - Operating mode selector switches
- Can be configured in the PNOZmulti Configurator
- LED indicator for:
  - Status of PNOZmulti
- Max. 8 PNOZ mi1p units can be connected to the base unit
- Test pulse outputs used to monitor shorts across the inputs
- Plug-in connection terminals (either cage clamp terminal or screw terminal)
- Coated version:

  Increased environmental requirements (see Technical details [📖 170])

Input modules
PNOZ mi1p

Front view

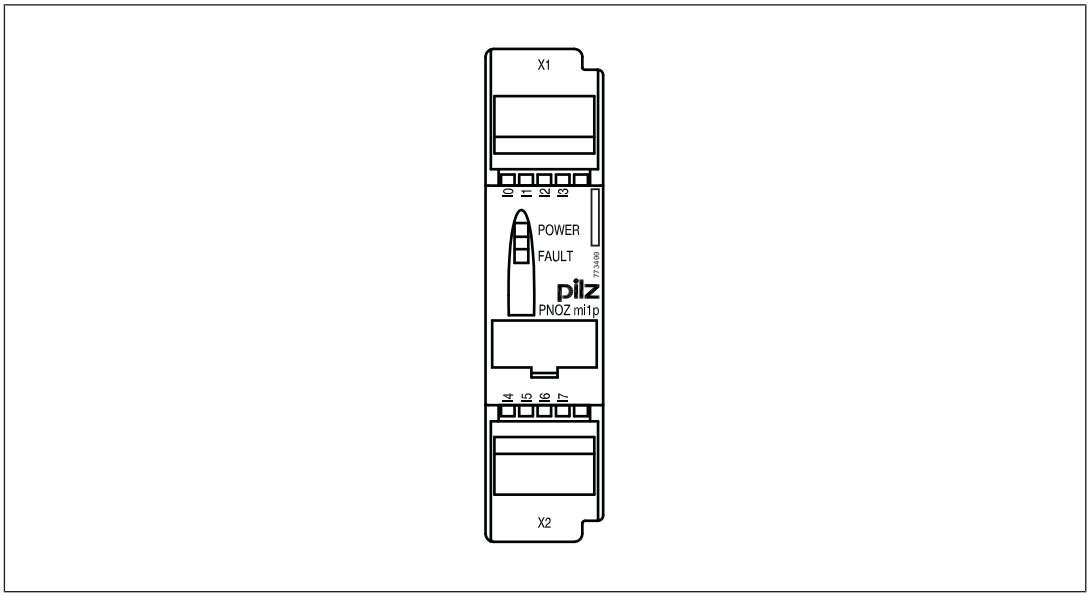

Legend:

- Inputs I0 – I7

Function description

Functions

The expansion module provides additional inputs.

The function of the inputs on the safety system depends on the safety circuit created using the PNOZmulti Configurator. A removable data medium is used to download the safety circuit to the base unit. The base unit has 2 microcontrollers that monitor each other. They evaluate the input circuits on the base unit and expansion modules and switch the outputs on the base unit and expansion modules accordingly.

The online help on the PNOZmulti Configurator contains descriptions of the operating modes and all the functions of the PNOZmulti safety system, plus connection examples.

System reaction time

Calculation of the maximum reaction time between an input switching off and a linked output in the system switching off is described in the document "PNOZmulti System Expansion [30]".

Input modules
PNOZ mi1p

Block diagram

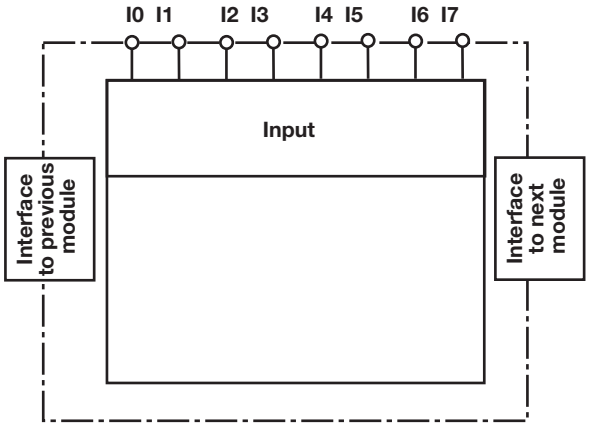

Installation

Dimensions in mm

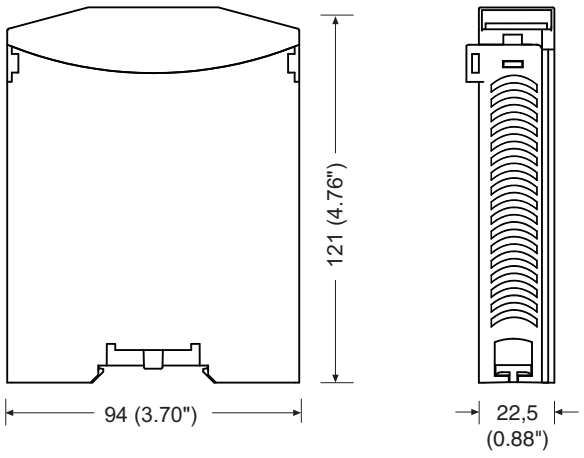

Input modules
PNOZ mi1p

Commissioning

General wiring guidelines

The wiring is defined in the circuit diagram of the PNOZmulti Configurator.

Please note:

- Information given in the Technical details [170] must be followed.
- The position of the expansion module is specified in the Hardware configuration of the PNOZmulti Configurator.
- Use copper wiring with a temperature stability of 75 °C.
- The safety system and input circuits must always be supplied by a single power supply. The power supply must meet the regulations for extra low voltages with protective separation.

Preparing for operation

The N/C contact on the trigger element (e.g. E-STOP) must be connected to the input circuit. A short circuit in the input circuit may or may not be detected, depending on the configuration and wiring. The test pulse outputs on the base unit must be used to detect shorts across contacts. The input assignment is defined in the PNOZmulti Configurator.

The input circuit should be connected as described in the table. The wiring at I0 and I1 is illustrated as an example; inputs I2 ... 17 are wired in a similar way.

Connection

Input circuit	Single-channel	Dual-channel
Example: E-Stop without detection of shorts across contacts	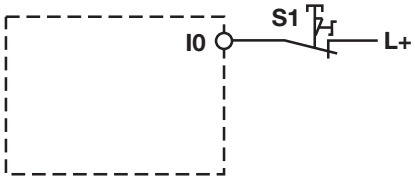	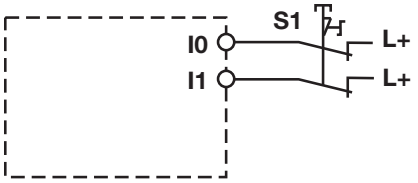
Example: E-Stop with detection of shorts across contacts	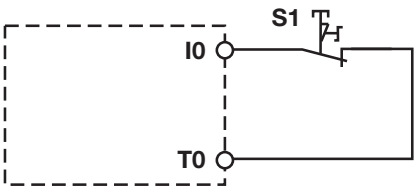	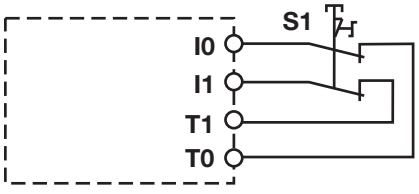

Input circuit

Input modules
PNOZ mi1p

Connection example

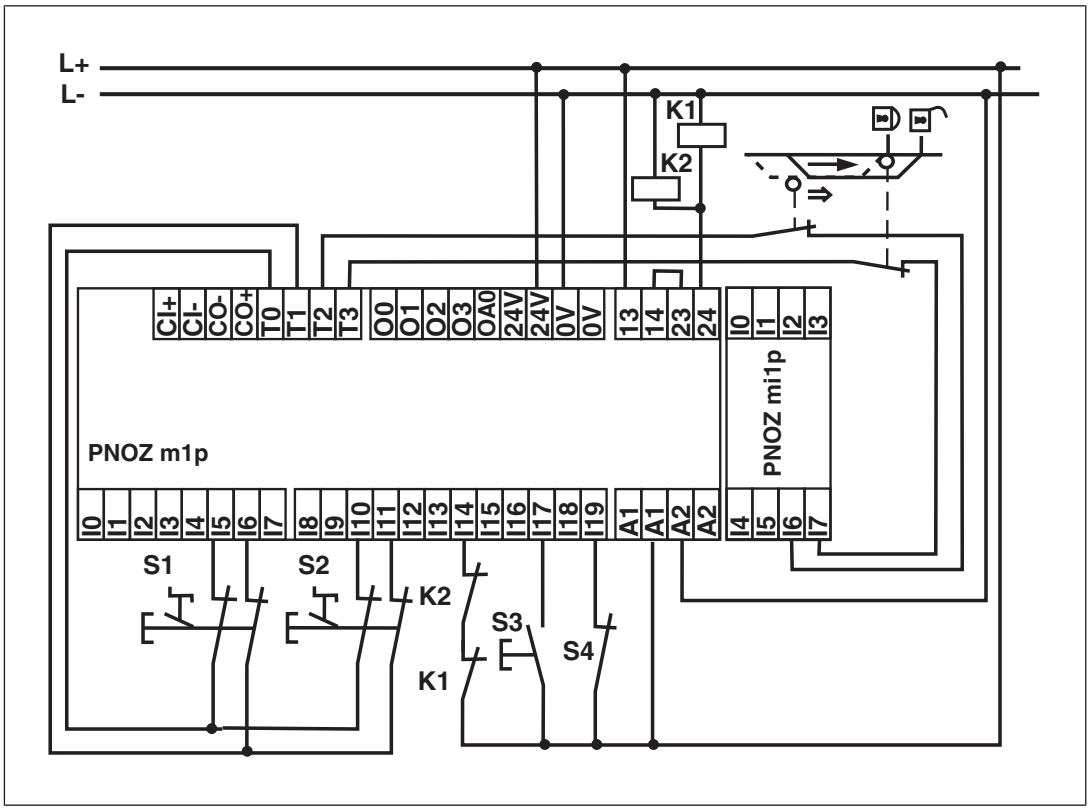

Technical details

General	773400	773405
Certifications	BG, CCC, CE, EAC (Eurasian), KOSHA, TÜV, cULus Listed	BG, CCC, CE, EAC (Eurasian), KOSHA, TÜV, cULus Listed
Electrical data	**773400**	**773405**
Supply voltage		
for	Module supply	Module supply
internal	Via base unit	Via base unit
Voltage	5 V	5 V
Kind	DC	DC
Voltage tolerance	-2 %/+2 %	-2 %/+2 %
Power consumption	2,5 W	2,5 W
Status indicator	LED	LED
Inputs	**773400**	**773405**
Number	8	8
Signal level at "0"	-3 - +5 V DC	-3 - +5 V DC
Signal level at "1"	15 - 30 V DC	15 - 30 V DC

Input modules
PNOZ mi1p

Inputs	773400	773405
Input voltage in accordance with EN 61131-2 Type 1	**24 V DC**	**24 V DC**
Min. pulse duration	**18 ms**	**18 ms**
Pulse suppression	**0,6 ms**	**0,6 ms**
Maximum input delay	**4 ms**	**4 ms**
Potential isolation	**No**	**No**
Times	**773400**	**773405**
Switch-on delay	**5 s**	**5 s**
Supply interruption before de-energisation	**20 ms**	**20 ms**
Simultaneity, channel 1 and 2 max.	**3 s**	**3 s**
Simultaneity in the two-hand circuit	**0,5 s**	**0,5 s**
Environmental data	**773400**	**773405**
Ambient temperature		
In accordance with the standard	**EN 60068-2-14**	**EN 60068-2-14**
Temperature range	**0 - 60 °C**	**-25 - 60 °C**
Forced convection in control cabinet off	**55 °C**	–
Storage temperature		
In accordance with the standard	**EN 60068-2-1/-2**	**EN 60068-2-1/-2**
Temperature range	**-25 - 70 °C**	**-25 - 70 °C**
Climatic suitability		
In accordance with the standard	**EN 60068-2-30, EN 60068-2-78**	**EN 60068-2-30, EN 60068-2-78**
Humidity	**93 % r. h. at 40 °C**	**93 % r. h. at 40 °C**
Condensation during operation	**Not permitted**	**Short-term**
EMC	**EN 61131-2**	**EN 61131-2**
Vibration		
In accordance with the standard	**EN 60068-2-6**	**EN 60068-2-6**
Frequency	**10 - 150 Hz**	**5 - 500 Hz**
Acceleration	**1g**	**1g**
Broadband noise		
In accordance with the standard	–	**EN 60068-2-64**
Frequency	–	**5 - 500 Hz**
Acceleration	–	**1,9grms**
Corrosive gas check		
SO2: Concentration 10 ppm, duration 10 days, passive	–	**DIN V 40046-36**
H2S: Concentration 1 ppm, duration 10 days, passive	–	**DIN V 40046-37**

Input modules
PNOZ mi1p

Environmental data	773400	773405
Shock stress		
In accordance with the standard	**EN 60068-2-27**	**EN 60068-2-27**
Acceleration	**15g**	**15g**
Duration	**11 ms**	**11 ms**
Max. operating height above sea level	**2000 m**	**2000 m**
Airgap creepage		
In accordance with the standard	**EN 61131-2**	**EN 61131-2**
Overvoltage category	**III**	**III**
Pollution degree	**2**	**2**
Rated insulation voltage	**30 V**	**30 V**
Protection type		
In accordance with the standard	**EN 60529**	**EN 60529**
Mounting area (e.g. control cabinet)	**IP54**	**IP54**
Housing	**IP20**	**IP20**
Terminals	**IP20**	**IP20**
Mechanical data	**773400**	**773405**
Mounting position	**horizontally on mounting rail**	**horizontally on mounting rail**
DIN rail		
Top hat rail	**35 x 7,5 EN 50022**	**35 x 7,5 EN 50022**
Recess width	**27 mm**	**27 mm**
Max. cable length		
Max. cable length per input	**1 km**	**1 km**
Material		
Bottom	**PPO UL 94 V0**	**PPO UL 94 V0**
Front	**ABS UL 94 V0**	**ABS UL 94 V0**
Connection type	**Spring-loaded terminal, screw terminal**	**Spring-loaded terminal, screw terminal**
Conductor cross section with screw terminals		
1 core flexible	**0,25 - 1,5 mm², 24 - 16 AWG**	**0,25 - 1,5 mm², 24 - 16 AWG**
2 core with the same cross section, flexible without crimp connectors or with TWIN crimp connectors	**0,25 - 0,75 mm², 24 - 20 AWG**	**0,25 - 0,75 mm², 24 - 20 AWG**
Torque setting with screw terminals	**0,25 Nm**	**0,25 Nm**
Stripping length with screw terminals	**7 mm**	**7 mm**

Input modules
PNOZ mi1p

Mechanical data	773400	773405
Conductor cross section with spring-loaded terminals		
1 core flexible without crimp connector	**0,25 - 1,5 mm², 24 - 16 AWG**	**0,25 - 1,5 mm², 24 - 16 AWG**
1 core flexible with crimp connector	**0,25 - 0,75 mm², 24 - 20 AWG**	**0,25 - 0,75 mm², 24 - 20 AWG**
Spring-loaded terminals: Terminal points per connection	**1**	**1**
Stripping length with spring-loaded terminals	**9 mm**	**9 mm**
Dimensions		
Height	**94 mm**	**94 mm**
Width	**22,5 mm**	**22,5 mm**
Depth	**121 mm**	**121 mm**
Weight	**120 g**	**123 g**

Where standards are undated, the 2020-07 latest editions shall apply.

Safety characteristic data

Operating mode	EN ISO 13849-1: 2015 PL	EN ISO 13849-1: 2015 Category	EN 62061 SIL CL	EN 62061 PFH_D [1/h]	IEC 61511 SIL	IEC 61511 PFD	EN ISO 13849-1: 2015 T_M [year]
1-channel	**PL d**	**Cat. 2**	**SIL CL 2**	**2,50E-09**	**SIL 2**	**2,20E-04**	**20**
2-channel	**PL e**	**Cat. 4**	**SIL CL 3**	**2,90E-10**	**SIL 3**	**4,50E-06**	**20**
Short circuit-forming safety mats	**PL d**	**Cat. 3**	**SIL CL 2**	**1,81E-09**	**SIL 2**	**9,34E-05**	**20**
1-ch., pulsed light barrier	**PL e**	**Cat. 4**	**SIL CL 3**	**2,50E-10**	**SIL 3**	**2,21E-05**	**20**

Explanatory notes for the safety-related characteristic data:

- The SIL CL value in accordance with EN 62061 corresponds to the SIL value in accordance with EN 61508.
- T_M is the maximum mission time in accordance with EN ISO 13849-1. The value also applies as the retest interval in accordance with EN 61508-6 and IEC 61511 and as the proof test interval and mission time in accordance with EN 62061.

All the units used within a safety function must be considered when calculating the safety characteristic data.

Input modules
PNOZ mi1p

Order reference

Product

Product type	Features	Order No.
PNOZ mi1p	Expansion module, 8 inputs	773 400
PNOZ mi1p coated version	Expansion module, 8 inputs, coated version	773 405

Accessories

Connection terminals

Product type	Features	Order No.
Set spring terminals	1 set of spring-loaded terminals	783 400
Set screw terminals	1 set of screw terminals	793 400

Terminator, jumper

Product type	Features	Order No.
PNOZmulti bus terminator	Terminator	779 110
PNOZmulti bus terminator coated	Terminator, coated version	779 112
KOP-XE	Jumper	774 639
KOP-XE coated	Jumper, coated version	774 640

Input modules
PNOZ mi2p



Overview

Unit features

Application of the product PNOZ mi2p:

Expansion module for connection to a base unit from the PNOZmulti system.

The product has the following features:

- 8 inputs for standard functions
- Can be configured in the PNOZmulti Configurator
- LED indicator for:
  - Status of PNOZmulti
- Max. 8 PNOZ mi2p can be connected to the base unit
- Plug-in connection terminals:
  Either spring-loaded terminal or screw terminal available as an accessory (see Order references for accessories [📖 772]).
- Please refer to the document "PNOZmulti System Expansion" for the PNOZmulti base units that can be connected.

Input modules
PNOZ mi2p

Front view

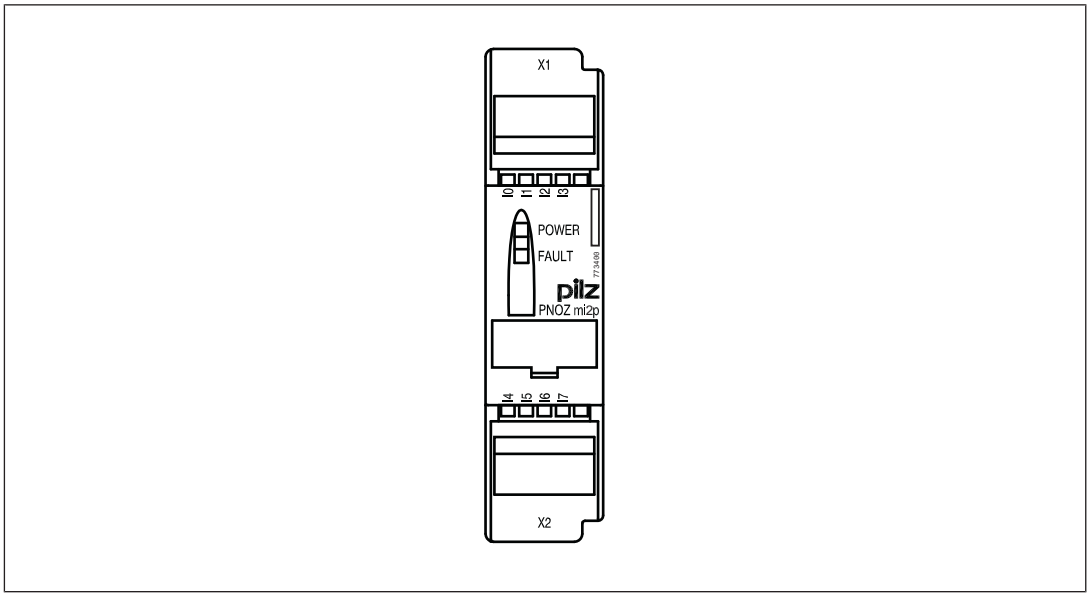

Legend:

- Inputs I0 – I7

Function description

Functions

The expansion module provides additional inputs.

The function of the inputs on the safety system depends on the safety circuit created using the PNOZmulti Configurator. A removable data medium is used to download the safety circuit to the base unit. The base unit has 2 microcontrollers that monitor each other. They evaluate the input circuits on the base unit and expansion modules and switch the outputs on the base unit and expansion modules accordingly.

The online help on the PNOZmulti Configurator contains descriptions of the operating modes and all the functions of the PNOZmulti safety system, plus connection examples.

System reaction time

Calculation of the maximum reaction time between an input switching off and a linked output in the system switching off is described in the document "PNOZmulti System Expansion [30]".

Input modules
PNOZ mi2p

Block diagram

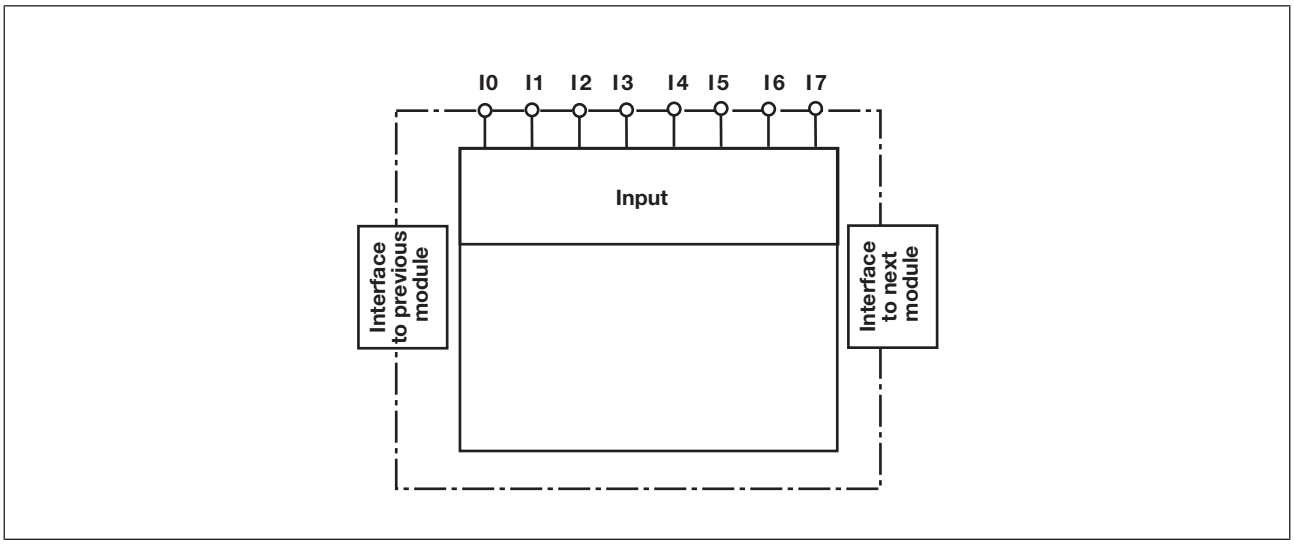

Installation

Dimensions in mm

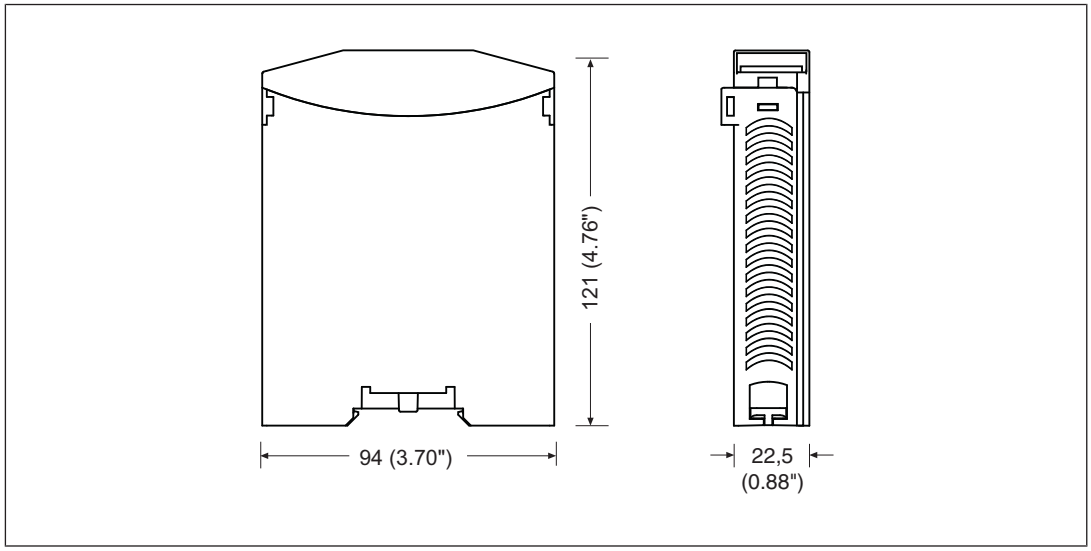

Input modules
PNOZ mi2p

Commissioning

General wiring guidelines

The wiring is defined in the circuit diagram of the PNOZmulti Configurator.

Please note:

- Information given in the Technical details [📖 179] must be followed.
- The position of the expansion module is specified in the Hardware configuration of the PNOZmulti Configurator.
- Use copper wiring with a temperature stability of 75 °C.
- The safety system and input circuits must always be supplied by a single power supply. The power supply must meet the regulations for extra low voltages with protective separation.

Connection

Input circuit	Contact	Semiconductor
Not safety-related	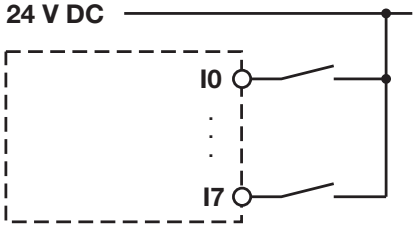	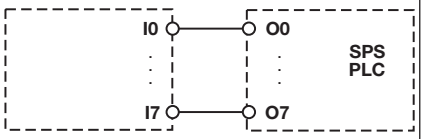

Input modules
PNOZ mi2p

Connection example

Poll of PLC outputs (standard function)

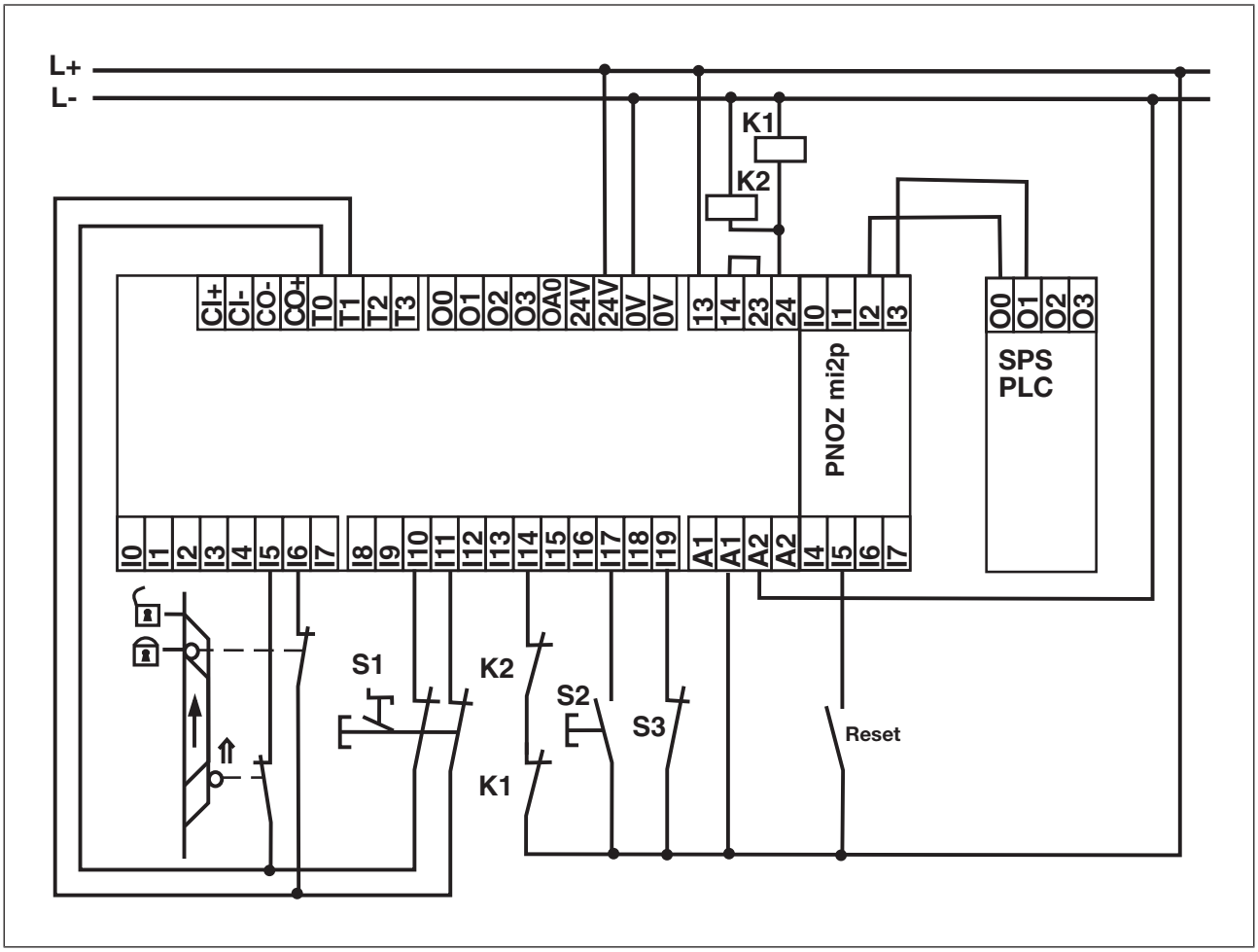

Technical details

General	
Certifications	**BG, CCC, CE, EAC (Eurasian), KOSHA, TÜV, cU-Lus Listed**
Electrical data	
Supply voltage	
for	**Module supply**
internal	**Via base unit**
Voltage	**5 V**
Kind	**DC**
Voltage tolerance	**-2 %/+2 %**
Power consumption	**2,5 W**

Input modules
PNOZ mi2p

Electrical data	
Status indicator	**LED**
Inputs	
Number	**8**
Signal level at "0"	**-3 - +5 V DC**
Signal level at "1"	**15 - 30 V DC**
Input voltage in accordance with EN 61131-2 Type 1	**24 V DC**
Min. pulse duration	**18 ms**
Pulse suppression	**0,6 ms**
Potential isolation	**No**
Times	
Switch-on delay	**5 s**
Supply interruption before de-energisation	**20 ms**
Simultaneity, channel 1 and 2 max.	**3 s**
Simultaneity in the two-hand circuit	**0,5 s**
Environmental data	
Ambient temperature	
In accordance with the standard	**EN 60068-2-14**
Temperature range	**0 - 60 °C**
Forced convection in control cabinet off	**55 °C**
Max. temperature in accordance with UL	**0 - 55 °C**
Storage temperature	
In accordance with the standard	**EN 60068-2-1/-2**
Temperature range	**-25 - 70 °C**
Climatic suitability	
In accordance with the standard	**EN 60068-2-30, EN 60068-2-78**
Humidity	**93 % r. h. at 40 °C**
Condensation during operation	**Not permitted**
Max. operating height above sea level	**2000 m**
EMC	**EN 61131-2**
Vibration	
In accordance with the standard	**EN 60068-2-6**
Frequency	**10 - 150 Hz**
Acceleration	**1g**
Shock stress	
In accordance with the standard	**EN 60068-2-27**
Acceleration	**15g**
Duration	**11 ms**

Input modules
PNOZ mi2p

Environmental data	
Airgap creepage	
In accordance with the standard	**EN 61131-2**
Overvoltage category	**III**
Pollution degree	**2**
Rated insulation voltage	**30 V**
Protection type	
In accordance with the standard	**EN 60529**
Housing	**IP20**
Terminals	**IP20**
Mounting area (e.g. control cabinet)	**IP54**
Mechanical data	
Mounting position	**horizontally on mounting rail**
DIN rail	
Top hat rail	**35 x 7,5 EN 50022**
Recess width	**27 mm**
Max. cable length	
Max. cable length per input	**1 km**
Material	
Bottom	**PPO UL 94 V0**
Front	**ABS UL 94 V0**
Connection type	**Spring-loaded terminal, screw terminal**
Conductor cross section with screw terminals	
1 core flexible	**0,25 - 1,5 mm², 24 - 16 AWG**
2 core with the same cross section, flexible without crimp connectors or with TWIN crimp connectors	**0,25 - 0,75 mm², 24 - 20 AWG**
Torque setting with screw terminals	**0,25 Nm**
Stripping length with screw terminals	**7 mm**
Conductor cross section with spring-loaded terminals	
1 core flexible without crimp connector	**0,25 - 1,5 mm², 24 - 16 AWG**
1 core flexible with crimp connector	**0,25 - 0,75 mm², 24 - 20 AWG**
Spring-loaded terminals: Terminal points per connection	**1**
Stripping length with spring-loaded terminals	**9 mm**
Dimensions	
Height	**94 mm**
Width	**22,5 mm**
Depth	**121 mm**
Weight	**119 g**

Where standards are undated, the 2020-07 latest editions shall apply.

Input modules
PNOZ mi2p

Order reference

Product

Product type	Features	Order No.
PNOZ mi2p	8 standard inputs	773 410

Accessories

Connection terminals

Product type	Features	Order No.
Set spring terminals	1 set of spring-loaded terminals	783 400
Set screw terminals	1 set of screw terminals	793 400

Terminator, jumper

Product type	Features	Order no.
PNOZmulti bus terminator	Terminator	779 110
KOP-XE	Jumper	774 639

Analogue input module
PNOZ ma1p



Overview

Unit features

Application of the product PNOZ ma1p:

Expansion module for connection to a base unit from the configurable control system PNOZmulti

The product has the following features:

- 2 safe analogue inputs for current or voltage measurement
- Each input can be configured separately
- Voltage range: -10,24 ... +10.2375 V
- Current range: 0 ... 25.59 mA
- Resolution
  - Voltage measurement: 13 Bit (signed 12 Bit)
  - Current measurement: 12 Bit
- Range monitoring to monitor for wiring errors or errors in the sensor (4 range limits can be configured)
- Threshold value monitoring to monitor process variables (8 threshold values can be configured)
- Max. 4 PNOZ ma1p units can be connected to the base unit
- Exact analogue value can be passed to a fieldbus for diagnostic purposes
- LEDs for
  - Operating state
  - State of the input signals (Ch0, Ch1)
  - Error
- Coated version:

  Increased environmental requirements (see Technical details [188])
- Plug-in connection terminals:
  Either spring-loaded terminal or screw terminal available as an accessory (see Order references for accessories [772]).

Analogue input module
PNOZ ma1p

- Please refer to the document "PNOZmulti System Expansion" for the PNOZmulti base units that can be connected.

Front view

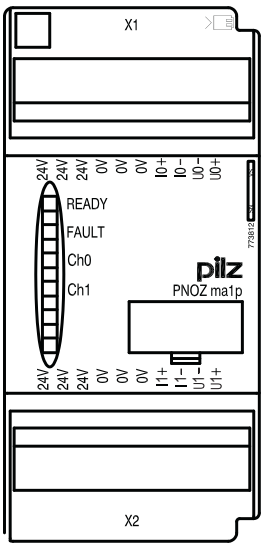

Key:

- 0 V, 24 V:
  Supply connections
- I0+, I0-:
  Inputs for current measurement
- U0+, U0-
  Inputs for voltage measurement

Function Description

Functions

The analogue input module monitors analogue input signals. It can measure both current and voltage.

The input signals are collected and read in at each input through two channels and are converted into digital signals. The resolution is 13 Bit for voltage measurement, 12 Bit for current measurement.

Analogue input module
PNOZ ma1p

In the PNOZmulti Configurator you can define limit values, which are to be monitored:

- **Range monitoring**
  With range monitoring you can define the permitted value range. You can define up to 4 range limits (e.g. <3 mA monitored for open circuit; I > 21 mA monitored for encoder error). Depending on the selected condition ("greater than" or "less than"), the ENBL output bit and output bits 1 - 8 for threshold value monitoring are set to "0" if the recorded value exceeds or drops below a range limit. An entry is added to the error stack.
  Exception: If "automatic start" type has been selected, no entry will be added to the error stack.
- **Threshold value monitoring**
  You can define up to 8 switching thresholds, which can be used to monitor certain process variables (e.g. different temperature values). The thresholds can be configured with or without scaling. 2 threshold values are configured per threshold. One threshold value defines when the relevant output bit (1 ... 8) is set to "1". The second threshold value defines when the output bit is reset to "0". No entry is added to the error stack.

The **exact analogue values** are made available to the base unit to forward to a fieldbus. This value is transmitted through a single channel and is not safety-related. It can be used for diagnostic purposes.

Block diagram

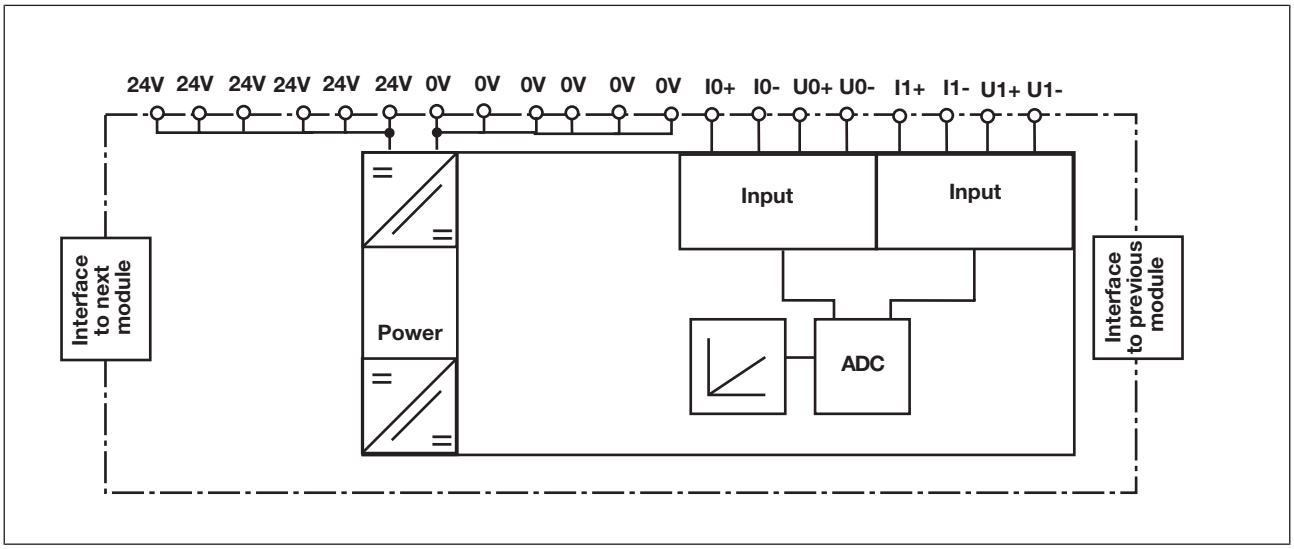

Analogue input module
PNOZ ma1p

Installation

Dimensions

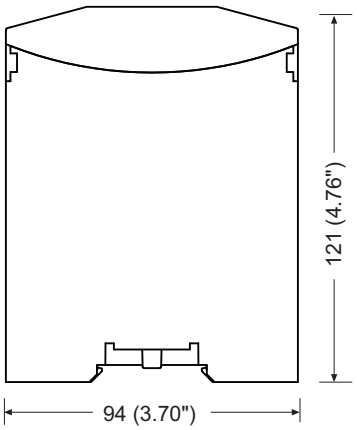

Commissioning

Wiring

The wiring is defined in the circuit diagram of the PNOZmulti Configurator.

Please note:

- Information given in the Technical details [188] must be followed.
- The position of the expansion module is specified in the Hardware configuration of the PNOZmulti Configurator.
- Use copper wiring with a temperature stability of 75 °C.
- The power supply that feeds the expansion module and the input devices must meet the regulations for extra low voltages with protective electrical separation (SELV, PELV).
- 6 connection terminals are available for each of the supply connections 24 V and 0 V. This means that the supply voltage can be looped through several connections and the encoder can be supplied.
- For the connection cables of the transducers use shielded cables with twisted pair cables and place the cable shield on both sides over a wide surface area and with low impedance on the earth potential.
- Separate the supply voltage cable from the analogue input current lines.
- If the analogue input module is used to measure current, the voltage inputs must be short-circuited.

Analogue input module
PNOZ ma1p

- **For transducers located outside the control cabinet:** Where the cable enters the control cabinet, the cable shield **must** be connected to the earth potential over a wide surface area and with low impedance (connect in star).

Connection

Example for current measurement	
SIL2 application	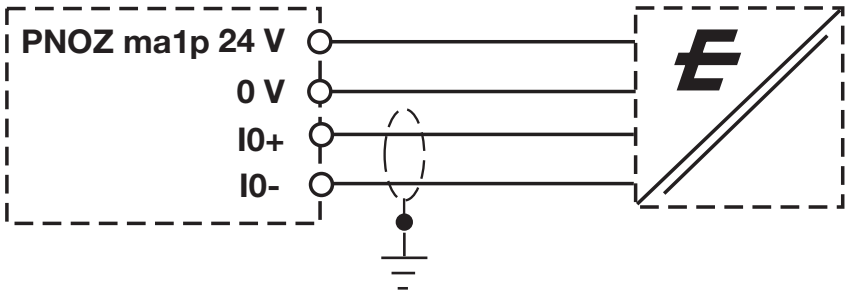
SIL3 application	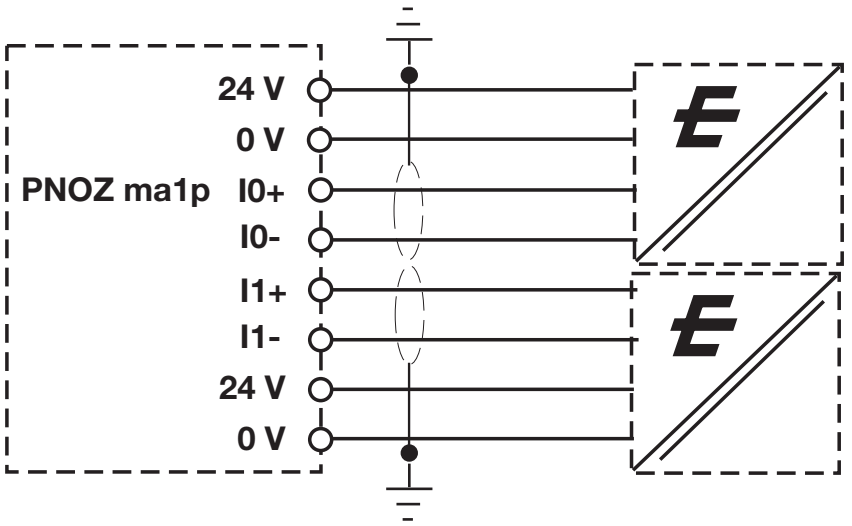

Connection to transducer (SIL2 or SIL3)

Please note:

- The transducers are SIL2 certified
- The voltage supply to the input device is optional
- With current measurement, the voltage inputs U+ - U- must be short-circuited.

Analogue input module
PNOZ ma1p

Technical details

General	773812	773813
Certifications	BG, CCC, CE, EAC (Eurasian), TÜV, cULus Listed	BG, CCC, CE, EAC (Eurasian), TÜV, cULus Listed
Electrical data	**773812**	**773813**
Supply voltage		
for	Module supply	Module supply
Voltage	24 V	24 V
Kind	DC	DC
Voltage tolerance	-15 %/+20 %	-15 %/+20 %
Output of external power supply (DC)	2 W	2 W
Residual ripple DC	5 %	5 %
Status indicator	LED	LED
Analogue inputs	**773812**	**773813**
Number of analogue inputs	2	2
Type of analogue inputs	Voltage, current	Voltage, current
Input filter	RC filter, 1st order	RC filter, 1st order
Cutoff frequency	80 Hz	80 Hz
Current measurement		
Signal range	0,00 - 25,59 mA	0,00 - 25,59 mA
Value range	0 - 4095 d	0 - 4095 d
Resolution	–	–
Value of least significant bit (LSB)	6,25 µA	6,25 µA
Input resistance	100 Ohm	100 Ohm
Max. continuous current	50 mA	50 mA
Voltage measurement		
Signal range	-10,24 - 10,2375 V	-10,24 - 10,2375 V
Value range	-4096 - 4095 d	-4096 - 4095 d
Resolution	13 Bit (signed 12 Bit)	13 Bit (signed 12 Bit)
Value of least significant bit (LSB)	5 mV	5 mV
Input resistance	290 kOhm	290 kOhm
Max. continuous voltage	-30 - 30 V	-30 - 30 V

Analogue input module
PNOZ ma1p

Analogue inputs	773812	773813
Deviations from the measuring range limit value		
Output variable error at 25 °C	**0,5 %**	**0,5 %**
Temperature coefficient	**0,0025 %/K**	**0,0025 %/K**
Greatest transient deviation during el. interference test	**1 %**	**1 %**
Max. measurement error at full temperature range	**0,5 %**	**0,5 %**
Max. measurement error in the case of a potential module error	**1,5 %**	**1,5 %**
Max. voltage between inputs I0 and I1 with current or voltage measurement	**30 V**	**30 V**
Filter time constant	**2 ms**	**2 ms**
Potential isolation	**No**	**No**
Times	**773812**	**773813**
Switch-on delay	**5 s**	**5 s**
Supply interruption before de-energisation	**20 ms**	**20 ms**
Max. reaction time when the input signal changes	**100 ms**	**100 ms**
Environmental data	**773812**	**773813**
Ambient temperature		
In accordance with the standard	**EN 60068-2-14**	**EN 60068-2-14**
Temperature range	**0 - 60 °C**	**-25 - 60 °C**
Forced convection in control cabinet off	**55 °C**	**55 °C**
Storage temperature		
In accordance with the standard	**EN 60068-2-1/-2**	**EN 60068-2-1/-2**
Temperature range	**-25 - 70 °C**	**-25 - 70 °C**
Climatic suitability		
In accordance with the standard	**EN 60068-2-30, EN 60068-2-78**	**EN 60068-2-30, EN 60068-2-78**
Humidity	**93 % r. h. at 40 °C**	**93 % r. h. at 40 °C**
Condensation during operation	**Not permitted**	**Short-term**
Max. operating height above sea level	**2000 m**	**2000 m**
EMC	**EN 61131-2**	**EN 61131-2**
Vibration		
In accordance with the standard	**EN 60068-2-6**	**EN 60068-2-6**
Frequency	**10 - 150 Hz**	–
Acceleration	**1g**	**1g**

Analogue input module
PNOZ ma1p

Environmental data	773812	773813
Broadband noise		
In accordance with the standard	–	**EN 60068-2-64**
Frequency	–	**5 - 500 Hz**
Acceleration	–	**1,9grms**
Shock stress		
In accordance with the standard	**EN 60068-2-27**	**EN 60068-2-27**
Acceleration	**15g**	**15g**
Duration	**11 ms**	**11 ms**
Airgap creepage		
In accordance with the standard	**EN 61131-2**	**EN 61131-2**
Overvoltage category	**III**	**III**
Pollution degree	**2**	**2**
Rated insulation voltage	**30 V**	**30 V**
Protection type		
In accordance with the standard	**EN 60529**	**EN 60529**
Housing	**IP20**	**IP20**
Terminals	**IP20**	**IP20**
Mounting area (e.g. control cabinet)	**IP54**	**IP54**
Mechanical data	**773812**	**773813**
Mounting position	**horizontally on mounting rail**	**horizontally on mounting rail**
DIN rail		
Top hat rail	**35 x 7,5 EN 50022**	**35 x 7,5 EN 50022**
Recess width	**27 mm**	**27 mm**
Material		
Bottom	**PPO UL 94 V0**	**PPO UL 94 V0**
Front	**ABS UL 94 V0**	**ABS UL 94 V0**
Connection type	**Spring-loaded terminal, screw terminal**	**Spring-loaded terminal, screw terminal**
Conductor cross section with screw terminals		
1 core flexible	**0,25 - 1,5 mm², 24 - 16 AWG**	**0,25 - 1,5 mm², 24 - 16 AWG**
2 core with the same cross section, flexible without crimp connectors or with TWIN crimp connectors	**0,25 - 0,75 mm², 24 - 20 AWG**	**0,25 - 0,75 mm², 24 - 20 AWG**
Torque setting with screw terminals	**0,25 Nm**	**0,25 Nm**
Stripping length with screw terminals	**7 mm**	**7 mm**

Analogue input module
PNOZ ma1p

Mechanical data	773812	773813
Conductor cross section with spring-loaded terminals		
1 core flexible without crimp connector	**0,25 - 1,5 mm², 24 - 16 AWG**	**0,25 - 1,5 mm², 24 - 16 AWG**
1 core flexible with crimp connector	**0,25 - 0,75 mm², 24 - 20 AWG**	**0,25 - 0,75 mm², 24 - 20 AWG**
Spring-loaded terminals: Terminal points per connection	**1**	**1**
Stripping length with spring-loaded terminals	**9 mm**	**9 mm**
Dimensions		
Height	**94 mm**	**94 mm**
Width	**45 mm**	**45 mm**
Depth	**121 mm**	**121 mm**
Weight	**184 g**	**196 g**

Where standards are undated, the 2020-07 latest editions shall apply.

Safety characteristic data

Operating mode	EN ISO 13849-1: 2015 PL	EN ISO 13849-1: 2015 Category	EN 62061 SIL CL	EN 62061 PFH_D [1/h]	IEC 61511 SIL	IEC 61511 PFD	EN ISO 13849-1: 2015 T_M [year]
1-channel	**PL e**	**Cat. 4**	**SIL CL 3**	**8,71E-09**	**SIL 3**	**4,21E-05**	**20**
2-channel	**PL e**	**Cat. 4**	**SIL CL 3**	**8,71E-09**	**SIL 3**	**4,21E-05**	**20**

Explanatory notes for the safety-related characteristic data:

- The SIL CL value in accordance with EN 62061 corresponds to the SIL value in accordance with EN 61508.
- T_M is the maximum mission time in accordance with EN ISO 13849-1. The value also applies as the retest interval in accordance with EN 61508-6 and IEC 61511 and as the proof test interval and mission time in accordance with EN 62061.

All the units used within a safety function must be considered when calculating the safety characteristic data.

Analogue input module
PNOZ ma1p

Order reference

Product

Product type	Features	Order No.
PNOZ ma1p	Expansion module, 2 analogue inputs	773 812
PNOZ ma1p coated version	Expansion module, 2 analogue inputs, coated version	773 813

Accessories

Connection terminals

Product type	Features	Order No.
Set spring terminals	1 set of spring-loaded terminals	783 700
Set screw terminals	1 set of screw terminals	793 700

Terminator, jumper

Product type	Features	Order No.
PNOZmulti bus terminator	Terminator	779 110
PNOZmulti bus terminator coated	Terminator, coated version	779 112
KOP-XE	Jumper	774 639
KOP-XE coated	Jumper, coated version	774 640

Output modules
PNOZ mo1p



Overview

Unit features

Application of the product PNOZ mo1p:

Expansion module for connection to a base unit from the configurable control system PNOZmulti

The product has the following features:

- Can be configured in the PNOZmulti Configurator
- Semiconductor outputs:

  4 safety outputs
  Depending on the application, up to PL e of EN ISO 13849-1 and up to SIL CL 3 of EN IEC 62061
- Please refer to the document "PNOZmulti System Expansion" for the PNOZmulti base units that can be connected.
- Plug-in connection terminals:
  Either spring-loaded terminal or screw terminal available as an accessory (see Order references for accessories [📖 772]).
- Coated version:

  Increased environmental requirements (see Technical details [📖 199])

Output modules
PNOZ mo1p

Front view

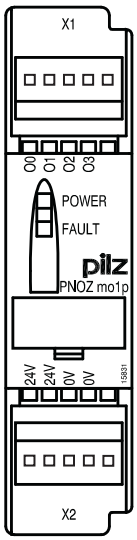

Legend:

- 0 V, 24 V
  Supply connections
- O0 – O4
  Semiconductor outputs

Function description

Functions

The expansion module provides additional semiconductor outputs.

The function of the outputs on the safety system depends on the safety circuit created using the PNOZmulti Configurator. A chip card is used to download the safety circuit to the base unit. The base unit has 2 microcontrollers that monitor each other. They evaluate the input circuits on the base unit and expansion modules and switch the outputs on the base unit and expansion modules accordingly.

The online help on the PNOZmulti Configurator contains descriptions of the operating modes and all the functions of the PNOZmulti safety system, plus connection examples.

Output modules
PNOZ mo1p

Block diagram

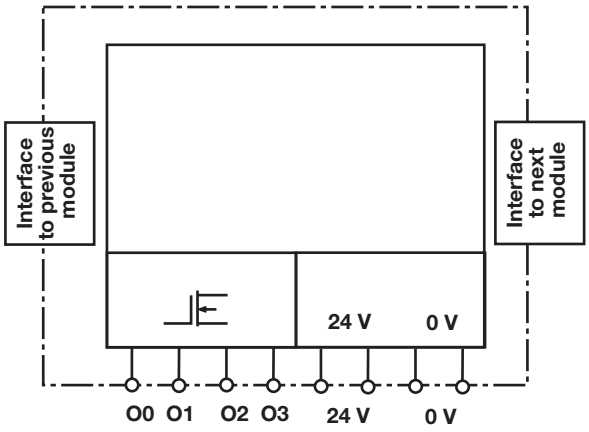

System reaction time

Calculation of the maximum reaction time between an input switching off and a linked output in the system switching off is described in the document "PNOZmulti System Expansion [📖 30]".

Installation

Dimensions in mm

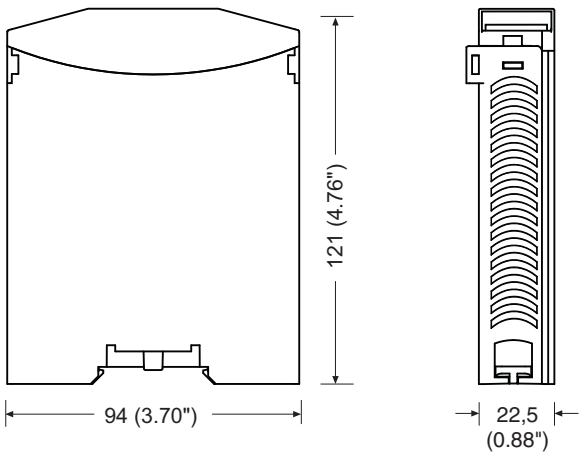

Output modules
PNOZ mo1p

Commissioning

General wiring guidelines

The wiring is defined in the circuit diagram of the PNOZmulti Configurator.

Please note:

- Information given in the Technical details [199] must be followed.
- The position of the expansion module is specified in the Hardware configuration of the PNOZmulti Configurator.
- Use copper wiring with a temperature stability of 75 °C.
- Two connection terminals are available for each of the supply connections 24 V and 0 V (semiconductor outputs), plus A1 and A2 (power supply). This means that the supply voltage can be looped through several connections. When the supply voltage is looped, the current at each terminal may not exceed 3 A.

Connection

Supply voltage	AC	DC
	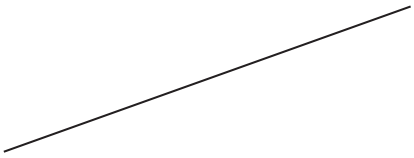	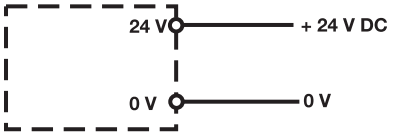

Output modules
PNOZ mo1p

Redundant output	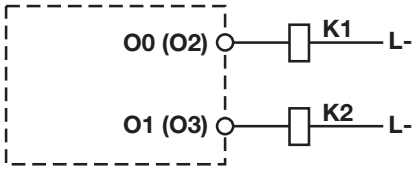	
Single output	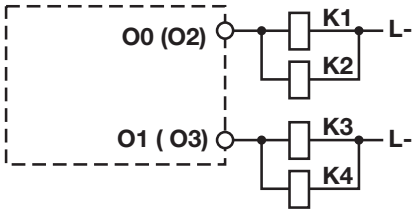	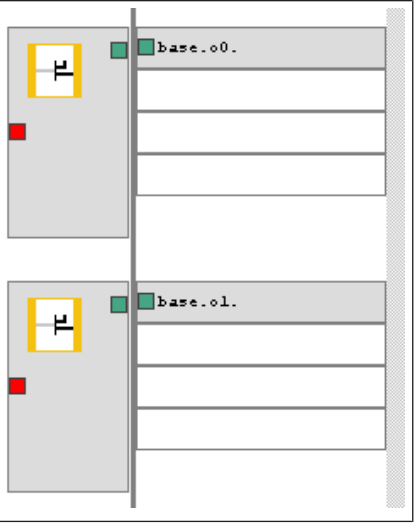

Feedback loop	Redundant output	
Contacts from external contactors	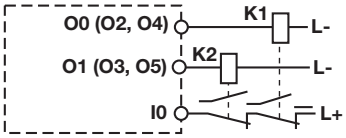	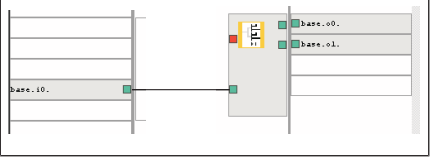

Output modules
PNOZ mo1p

Connection example

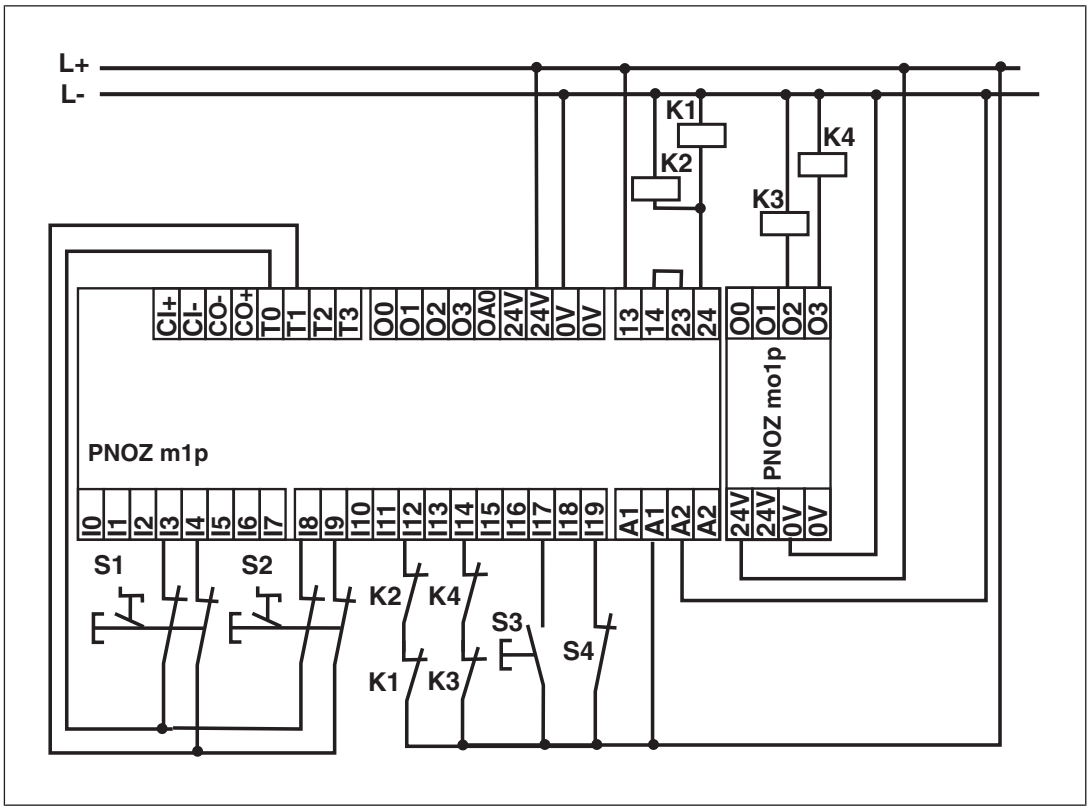

PNOZ mo1p: Contactor K3 and K4
PNOZ m1p: Feedback loop K3 and K4 at I14

Output modules
PNOZ mo1p

Technical details

General	773500	773505
Certifications	BG, CCC, CE, EAC (Eurasian), KOSHA, TÜV, cULus Listed	BG, CCC, CE, EAC (Eurasian), KOSHA, TÜV, cULus Listed
Electrical data	**773500**	**773505**
Supply voltage		
for	Supply to the SC outputs	Supply to the SC outputs
Voltage	24 V	24 V
Kind	DC	DC
Voltage tolerance	-15 %/+20 %	-15 %/+20 %
Output of external power supply (DC)	192 W	192 W
Residual ripple DC	5 %	5 %
Potential isolation	yes	yes
Supply voltage		
for	Module supply	Module supply
internal	Via base unit	Via base unit
Voltage	5 V	5 V
Kind	DC	DC
Voltage tolerance	-2 %/+2 %	-2 %/+2 %
Power consumption	2,5 W	2,5 W
Status indicator	LED	LED
Semiconductor outputs	**773500**	**773505**
Number	4	4
Switching capability		
Voltage	24 V	24 V
Current	2 A	2 A
Power	48 W	48 W
Voltage	–	24 V
Current	–	1 A
Power	–	24 W
Signal level at "1"	UB - 0.5 VDC at 2 A	UB - 0.5 VDC at 2 A
Residual current at "0"	0,5 mA	0,5 mA
Max. capacitive load	1 µF	1 µF
Max. duration of off time during self test	300 µs	300 µs
Switch-off delay	30 ms	30 ms
Potential isolation	yes	yes
Short circuit-proof	yes	yes

Output modules
PNOZ mo1p

Times	773500	773505
Switch-on delay	**5 s**	**5 s**
Supply interruption before de-energisation	**20 ms**	**20 ms**
Environmental data	**773500**	**773505**
Ambient temperature		
In accordance with the standard	**EN 60068-2-14**	**EN 60068-2-14**
Temperature range	**0 - 60 °C**	**-25 - 60 °C**
Forced convection in control cabinet off	**55 °C**	–
Storage temperature		
In accordance with the standard	**EN 60068-2-1/-2**	**EN 60068-2-1/-2**
Temperature range	**-25 - 70 °C**	**-25 - 70 °C**
Climatic suitability		
In accordance with the standard	**EN 60068-2-30, EN 60068-2-78**	**EN 60068-2-30, EN 60068-2-78**
Humidity	**93 % r. h. at 40 °C**	**93 % r. h. at 40 °C**
Condensation during operation	**Not permitted**	**Short-term**
EMC	**EN 61131-2**	**EN 61131-2**
Vibration		
In accordance with the standard	**EN 60068-2-6**	**EN 60068-2-6**
Frequency	**10 - 150 Hz**	**5 - 500 Hz**
Acceleration	**1g**	**1g**
Broadband noise		
In accordance with the standard	–	**EN 60068-2-64**
Frequency	–	**5 - 500 Hz**
Acceleration	–	**1,9grms**
Corrosive gas check		
SO2: Concentration 10 ppm, duration 10 days, passive	–	**DIN V 40046-36**
H2S: Concentration 1 ppm, duration 10 days, passive	–	**DIN V 40046-37**
Shock stress		
In accordance with the standard	**EN 60068-2-27**	**EN 60068-2-27**
Acceleration	**15g**	**15g**
Duration	**11 ms**	**11 ms**
Max. operating height above sea level	**2000 m**	**2000 m**
Airgap creepage		
In accordance with the standard	**EN 61131-2**	**EN 61131-2**
Overvoltage category	**III**	**III**
Pollution degree	**2**	**2**
Rated insulation voltage	**30 V**	**30 V**

Output modules
PNOZ mo1p

Environmental data	773500	773505
Protection type		
In accordance with the standard	**EN 60529**	**EN 60529**
Mounting area (e.g. control cabinet)	**IP54**	**IP54**
Housing	**IP20**	**IP20**
Terminals	**IP20**	**IP20**
Potential isolation	**773500**	**773505**
Potential isolation between	**SC output and system voltage**	**SC output and system voltage**
Type of potential isolation	**Protective separation**	**Protective separation**
Rated surge voltage	**2500 V**	**2500 V**
Mechanical data	**773500**	**773505**
Mounting position	**horizontally on mounting rail**	**horizontally on mounting rail**
DIN rail		
Top hat rail	**35 x 7,5 EN 50022**	**35 x 7,5 EN 50022**
Recess width	**27 mm**	**27 mm**
Material		
Bottom	**PPO UL 94 V0**	**PPO UL 94 V0**
Front	**ABS UL 94 V0**	**ABS UL 94 V0**
Connection type	**Spring-loaded terminal, screw terminal**	**Spring-loaded terminal, screw terminal**
Conductor cross section with screw terminals		
1 core flexible	**0,25 - 1,5 mm², 24 - 16 AWG**	**0,25 - 1,5 mm², 24 - 16 AWG**
2 core with the same cross section, flexible without crimp connectors or with TWIN crimp connectors	**0,25 - 0,75 mm², 24 - 20 AWG**	**0,25 - 0,75 mm², 24 - 20 AWG**
Torque setting with screw terminals	**0,25 Nm**	**0,25 Nm**
Stripping length with screw terminals	**7 mm**	**7 mm**
Conductor cross section with spring-loaded terminals		
1 core flexible without crimp connector	**0,25 - 1,5 mm², 24 - 16 AWG**	**0,25 - 1,5 mm², 24 - 16 AWG**
1 core flexible with crimp connector	**0,25 - 0,75 mm², 24 - 20 AWG**	**0,25 - 0,75 mm², 24 - 20 AWG**
Spring-loaded terminals: Terminal points per connection	**1**	**1**
Stripping length with spring-loaded terminals	**9 mm**	**9 mm**

Output modules
PNOZ mo1p

Mechanical data	773500	773505
Dimensions		
Height	**94 mm**	**94 mm**
Width	**22,5 mm**	**22,5 mm**
Depth	**121 mm**	**121 mm**
Weight	**154 g**	**156 g**

Where standards are undated, the 2020-07 latest editions shall apply.

Safety characteristic data

Operating mode	EN ISO 13849-1: 2015 PL	EN ISO 13849-1: 2015 Category	EN 62061 SIL CL	EN 62061 PFH_D [1/h]	IEC 61511 SIL	IEC 61511 PFD	EN ISO 13849-1: 2015 T_M [year]
1-channel	**PL d**	**Cat. 2**	**SIL CL 2**	**7,00E-09**	**SIL 2**	**6,14E-04**	**20**
2-channel	**PL e**	**Cat. 4**	**SIL CL 3**	**8,60E-10**	**SIL 3**	**1,30E-05**	**20**

Explanatory notes for the safety-related characteristic data:

- The SIL CL value in accordance with EN 62061 corresponds to the SIL value in accordance with EN 61508.
- T_M is the maximum mission time in accordance with EN ISO 13849-1. The value also applies as the retest interval in accordance with EN 61508-6 and IEC 61511 and as the proof test interval and mission time in accordance with EN 62061.

All the units used within a safety function must be considered when calculating the safety characteristic data.

Order reference

Product

Product type	Features	Order No.
PNOZ mo1p	Expansion module, 2 or 4 semiconductor outputs, safe	773 500
PNOZ mo1p coated version	Expansion module, 2 or 4 semiconductor outputs, safe, coated version	773 505

Output modules
PNOZ mo1p

Accessories

Terminator, jumper

Product type	Features	Order No.
PNOZmulti bus terminator	Terminator	779 110
PNOZmulti bus terminator coated	Terminator, coated version	779 112
KOP-XE	Jumper	774 639
KOP-XE coated	Jumper, coated version	774 640

Connection terminals

Product type	Features	Order No.
Set spring terminals	1 set of spring-loaded terminals	783 400
Set screw terminals	1 set of screw terminals	793 400

Supplementary data

Maximum capacitive load C (µF) with load current I (mA) at the semiconductor outputs

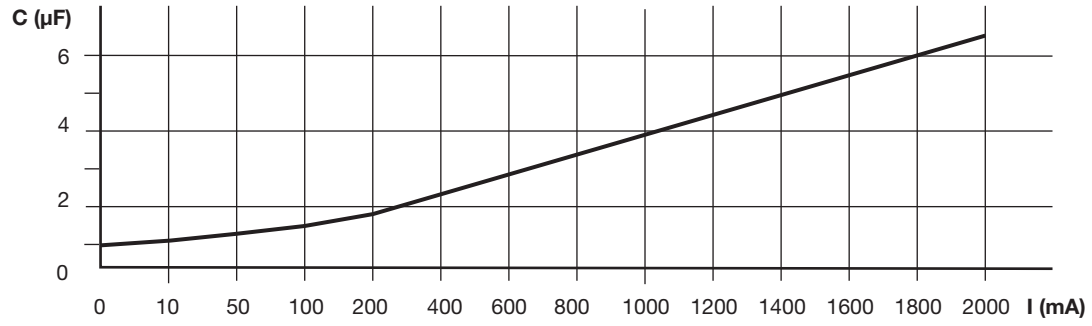

Output modules
PNOZ mo2p



Overview

Unit features

Application of the product PNOZ mo2p:

Expansion module for connection to a base unit from the configurable control system PNOZmulti

The product has the following features:

- Positive-guided relay outputs:

  2 safety outputs
  Depending on the application, up to PL e of EN ISO 13849-1 and up to SIL CL 3 of EN IEC 62061
- Can be configured in the PNOZmulti Configurator
- Status indicators
- Please refer to the document "PNOZmulti System Expansion" for the PNOZmulti base units that can be connected.
- Plug-in connection terminals:
  Either spring-loaded terminal or screw terminal available as an accessory (see Order references for accessories [📖 772]).
- Coated version:

  Increased environmental requirements (see Technical details [📖 208])

Output modules
PNOZ mo2p

Front view

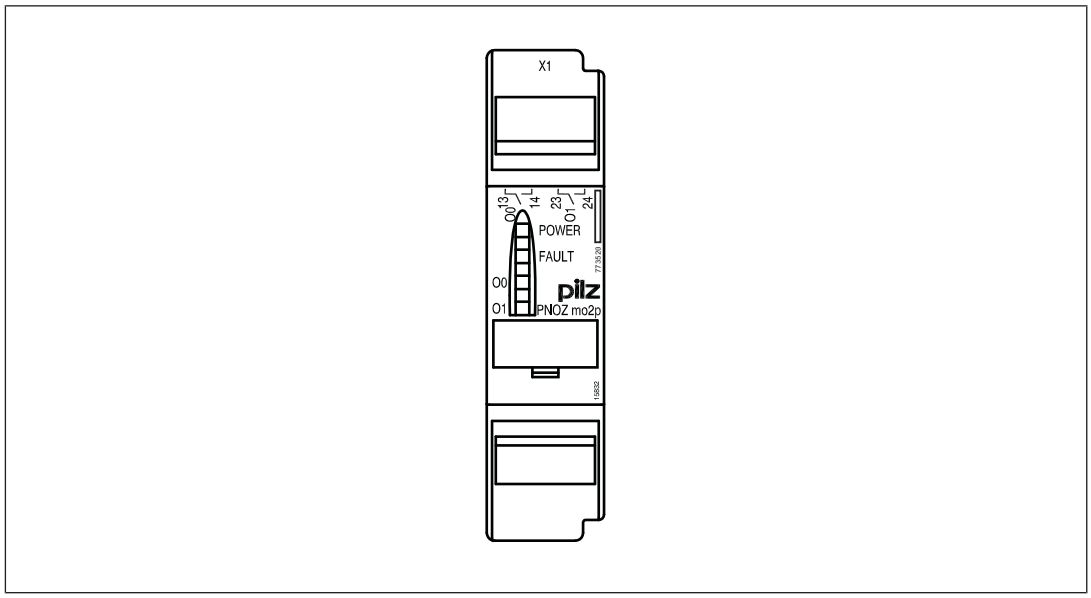

Key:

- O0 – O1
  Relay outputs

Function description

Functions

The expansion module provides additional relay outputs.

The function of the outputs on the safety system depends on the safety circuit created using the PNOZmulti Configurator. A chip card is used to download the safety circuit to the base unit. The base unit has 2 microcontrollers that monitor each other. They evaluate the input circuits on the base unit and expansion modules and switch the outputs on the base unit and expansion modules accordingly.

The online help on the PNOZmulti Configurator contains descriptions of the operating modes and all the functions of the PNOZmulti safety system, plus connection examples.

System reaction time

Calculation of the maximum reaction time between an input switching off and a linked output in the system switching off is described in the document "PNOZmulti System Expansion [30]".

Output modules
PNOZ mo2p

Block diagram

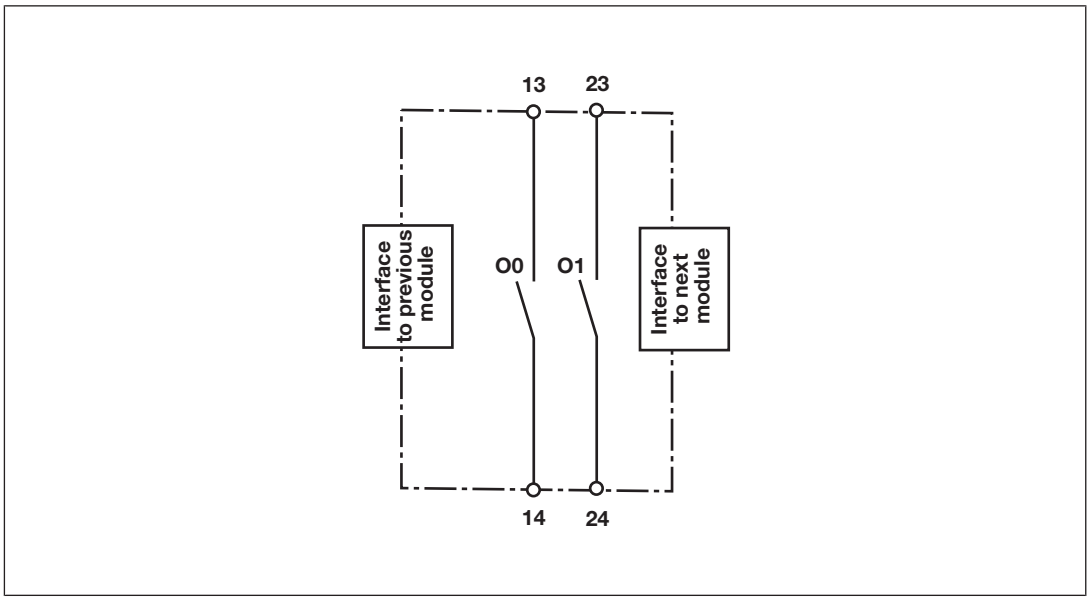

Installation

Dimensions in mm

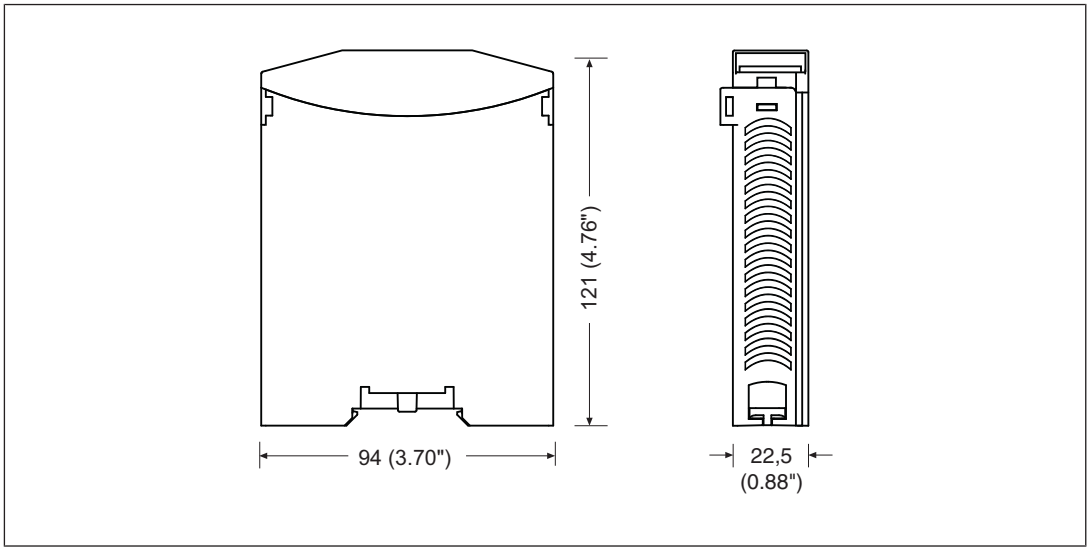

Output modules
PNOZ mo2p

Commissioning

General wiring guidelines

The wiring is defined in the circuit diagram of the PNOZmulti Configurator.

Please note:

- Information given in the Technical details [208] must be followed.
- The position of the expansion module is specified in the Hardware configuration of the PNOZmulti Configurator.
- Use copper wiring with a temperature stability of 75 °C.

Connection

Redundant	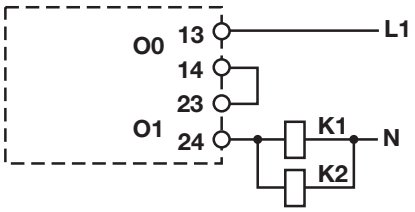	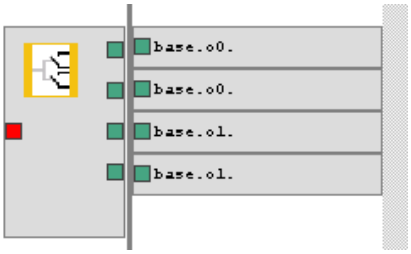
single	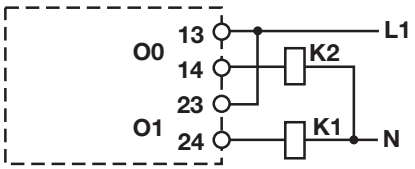	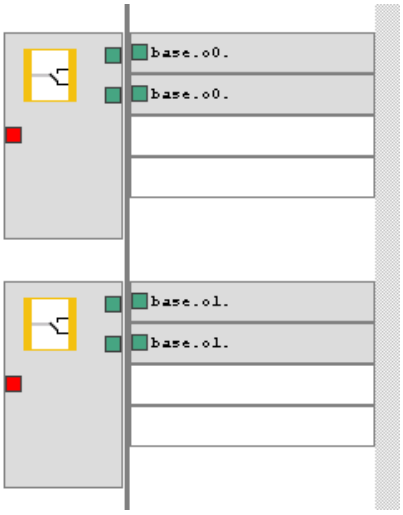

Feedback loop	Redundant output	
Contacts from external contactors	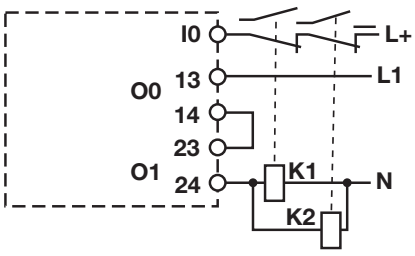	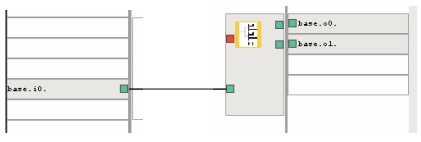

Output modules
PNOZ mo2p

Connection example

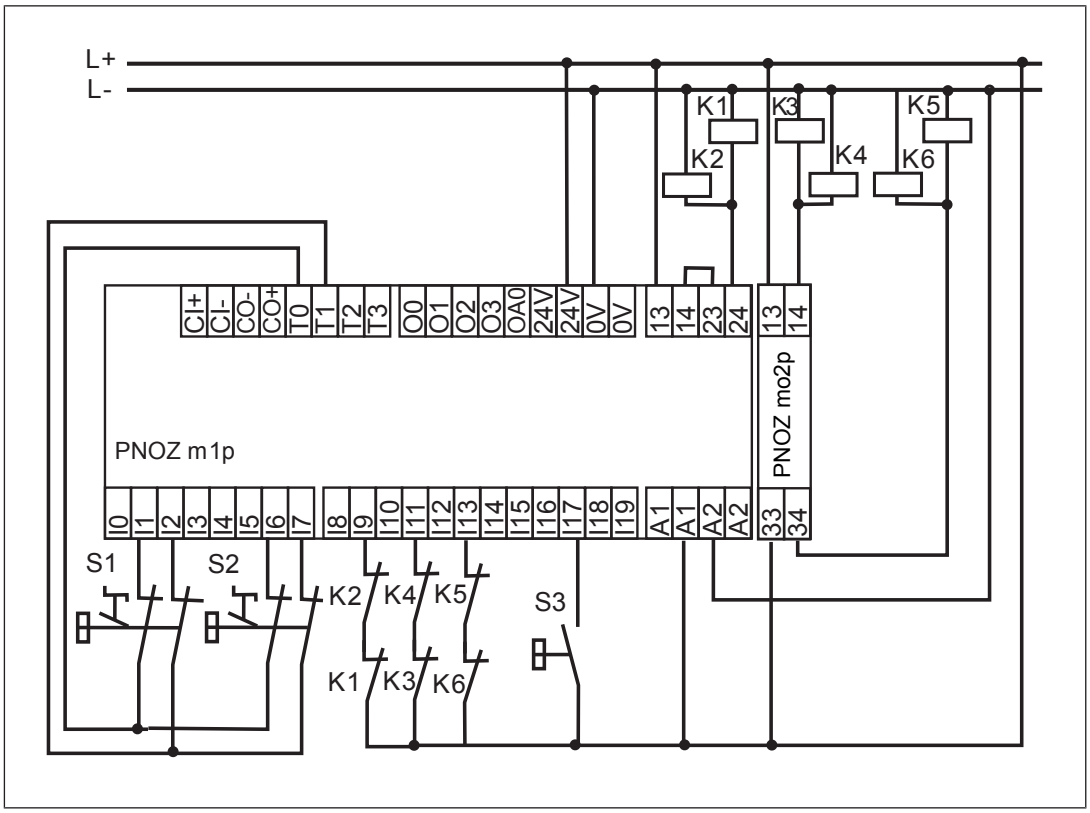

Technical details

General	773520	773525
Certifications	**BG, CCC, CE, EAC (Eurasian), KOSHA, TÜV, cULus Listed**	**BG, CCC, CE, EAC (Eurasian), KOSHA, TÜV, cULus Listed**
Electrical data	**773520**	**773525**
Supply voltage		
for	**Module supply**	**Module supply**
internal	**Via base unit**	**Via base unit**
Voltage	**5 V**	**5 V**
Kind	**DC**	**DC**
Voltage tolerance	**-2 %/+2 %**	**-2 %/+2 %**
Power consumption	**2,5 W**	**2,5 W**
Status indicator	**LED**	**LED**
Relay outputs	**773520**	**773525**
Utilisation category		
In accordance with the standard	**EN 60947-4-1**	**EN 60947-4-1**

Output modules
PNOZ mo2p

Relay outputs	773520	773525
Utilisation category of safety contacts		
AC1 at	**240 V**	**240 V**
Min. current	**10 mA**	**10 mA**
Max. current	**6 A**	**6 A**
Max. power	**1440 VA**	**1440 VA**
DC1 at	**24 V**	**24 V**
Min. current	**10 mA**	**10 mA**
Max. current	**6 A**	**6 A**
Max. power	**144 W**	**144 W**
Safety contacts, AC1 at	–	**240 V**
Max. current	–	**4 A**
Max. power	–	**960 W**
Safety contacts, DC 1 at	–	**24 V**
Max. current	–	**4 A**
Max. power	–	**96 W**
Utilisation category		
In accordance with the standard	**EN 60947-5-1**	**EN 60947-5-1**
Utilisation category of safety contacts		
AC15 at	**230 V**	**230 V**
Max. current	**3 A**	**3 A**
Max. power	**690 W**	**690 W**
DC13 (6 cycles/min) at	**24 V**	**24 V**
Max. current	**3 A**	**3 A**
Max. power	**72 W**	**72 W**
Airgap creepage between		
Relay contacts	**3 mm**	**3 mm**
Relay contacts and other circuits	**5,5 mm**	**5,5 mm**
External contact fuse protection, safety contacts		
In accordance with the standard	**EN 60947-5-1**	**EN 60947-5-1**
Blow-out fuse, quick	**6 A**	**6 A**
Blow-out fuse, slow	**6 A**	**6 A**
Circuit breaker 24V AC/DC, characteristic B/C	**6 A**	**6 A**
Switch-off delay	**50 ms**	**50 ms**
Potential isolation	**yes**	**yes**
Times	**773520**	**773525**
Switch-on delay	**5 s**	**5 s**

Output modules
PNOZ mo2p

Times	773520	773525
Supply interruption before de-energisation	**20 ms**	**20 ms**
Environmental data	**773520**	**773525**
Ambient temperature		
In accordance with the standard	**EN 60068-2-14**	**EN 60068-2-14**
Temperature range	**0 - 60 °C**	**-25 - 60 °C**
Forced convection in control cabinet off	**55 °C**	–
Storage temperature		
In accordance with the standard	**EN 60068-2-1/-2**	**EN 60068-2-1/-2**
Temperature range	**-25 - 70 °C**	**-25 - 70 °C**
Climatic suitability		
In accordance with the standard	**EN 60068-2-30, EN 60068-2-78**	**EN 60068-2-30, EN 60068-2-78**
Humidity	**93 % r. h. at 40 °C**	**93 % r. h. at 40 °C**
Condensation during operation	**Not permitted**	**Short-term (only with separated extra low voltage)**
EMC	**EN 61131-2**	**EN 61131-2**
Vibration		
In accordance with the standard	**EN 60068-2-6**	**EN 60068-2-6**
Frequency	**10 - 150 Hz**	**10 - 150 Hz**
Acceleration	**1g**	**1g**
Broadband noise		
In accordance with the standard	–	**EN 60068-2-64**
Frequency	–	**5 - 500 Hz**
Acceleration	–	**1,9grms**
Corrosive gas check		
SO2: Concentration 10 ppm, duration 10 days, passive	–	**DIN V 40046-36**
H2S: Concentration 1 ppm, duration 10 days, passive	–	**DIN V 40046-37**
Shock stress		
In accordance with the standard	**EN 60068-2-27**	**EN 60068-2-27**
Acceleration	**15g**	**15g**
Duration	**11 ms**	**11 ms**
Max. operating height above sea level	**2000 m**	**2000 m**
Airgap creepage		
In accordance with the standard	**EN 61131-2**	**EN 61131-2**
Overvoltage category	**III**	**III**
Pollution degree	**2**	**2**
Rated insulation voltage	**250 V**	**250 V**
Rated impulse withstand voltage	**6 kV**	**6 kV**

Output modules
PNOZ mo2p

Environmental data	773520	773525
Protection type		
In accordance with the standard	**EN 60529**	**EN 60529**
Mounting area (e.g. control cabinet)	**IP54**	**IP54**
Housing	**IP20**	**IP20**
Terminals	**IP20**	**IP20**
Potential isolation	**773520**	**773525**
Potential isolation between	**Relay output and system voltage**	**Relay output and system voltage**
Type of potential isolation	**Protective separation**	**Protective separation**
Rated surge voltage	**6000 V**	**6000 V**
Mechanical data	**773520**	**773525**
Mounting position	**horizontally on mounting rail**	**horizontally on mounting rail**
DIN rail		
Top hat rail	**35 x 7,5 EN 50022**	**35 x 7,5 EN 50022**
Recess width	**27 mm**	**27 mm**
Material		
Bottom	**PPO UL 94 V0**	**PPO UL 94 V0**
Front	**ABS UL 94 V0**	**ABS UL 94 V0**
Connection type	**Spring-loaded terminal, screw terminal**	**Spring-loaded terminal, screw terminal**
Conductor cross section with screw terminals (relay outputs)		
1 core flexible	**0,25 - 2,5 mm², 24 - 12 AWG**	**0,25 - 2,5 mm², 24 - 12 AWG**
2 core with the same cross section, flexible without crimp connectors or with TWIN crimp connectors	**0,25 - 1,5 mm², 24 - 16 AWG**	**0,25 - 1,5 mm², 24 - 16 AWG**
Torque setting with screw terminals (relay outputs)	**0,5 Nm**	**0,5 Nm**
Stripping length with screw terminals (relay outputs)	**8 mm**	**8 mm**
Conductor cross section with spring-loaded terminals (relay outputs)		
1 core flexible without crimp connector	**0,25 - 2,5 mm², 24 - 12 AWG**	**0,25 - 2,5 mm², 24 - 12 AWG**
1 core flexible with crimp connector	**0,25 - 1,5 mm², 24 - 16 AWG**	**0,25 - 1,5 mm², 24 - 16 AWG**
Spring-loaded terminals: Terminal points per connection	**1**	**1**
Stripping length with spring-loaded terminals (relay outputs)	**10 mm**	**10 mm**

Output modules
PNOZ mo2p

Mechanical data	773520	773525
Dimensions		
Height	**94 mm**	**94 mm**
Width	**22,5 mm**	**22,5 mm**
Depth	**121 mm**	**121 mm**
Weight	**170 g**	**151 g**

Where standards are undated, the 2020-07 latest editions shall apply.

Safety characteristic data

Operating mode	EN ISO 13849-1: 2015 PL	EN ISO 13849-1: 2015 Category	EN 62061 SIL CL	EN 62061 PFH_D [1/h]	IEC 61511 SIL	IEC 61511 PFD	EN ISO 13849-1: 2015 T_M [year]
1-channel	**PL c**	**Cat. 1**	**-**	**2,90E-08**	**-**	**2,60E-03**	**20**
2-channel	**PL e**	**Cat. 4**	**SIL CL 3**	**3,00E-10**	**SIL 3**	**5,20E-07**	**20**

Explanatory notes for the safety-related characteristic data:

- The SIL CL value in accordance with EN 62061 corresponds to the SIL value in accordance with EN 61508.
- T_M is the maximum mission time in accordance with EN ISO 13849-1. The value also applies as the retest interval in accordance with EN 61508-6 and IEC 61511 and as the proof test interval and mission time in accordance with EN 62061.

All the units used within a safety function must be considered when calculating the safety characteristic data.

The PFH value depends on the switch frequency and the load of the relay output.
If the service life graphs are not accessible, the stated PFH value can be used irrespective of the switch frequency and the load, as the PFH value already considers the relay's B10d value as well as the failure rates of the other components.

Output modules
PNOZ mo2p

Supplementary data

Service life graph for the relay contacts

The service life graphs indicate the number of cycles from which failures due to wear must be expected. The wear is mainly caused by the electrical load; the mechanical load is negligible.

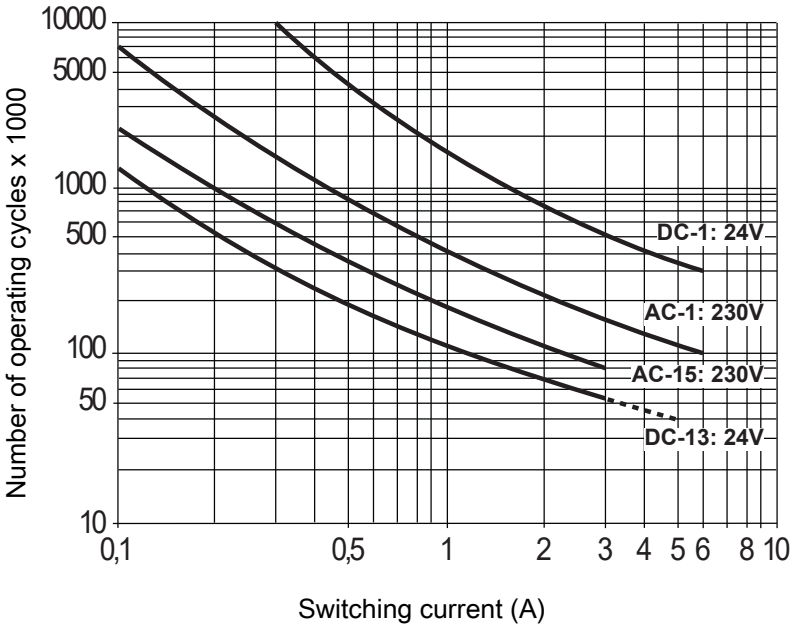

Fig.: Service life graphs at 24 VDC and 230 VAC

Output modules
PNOZ mo2p

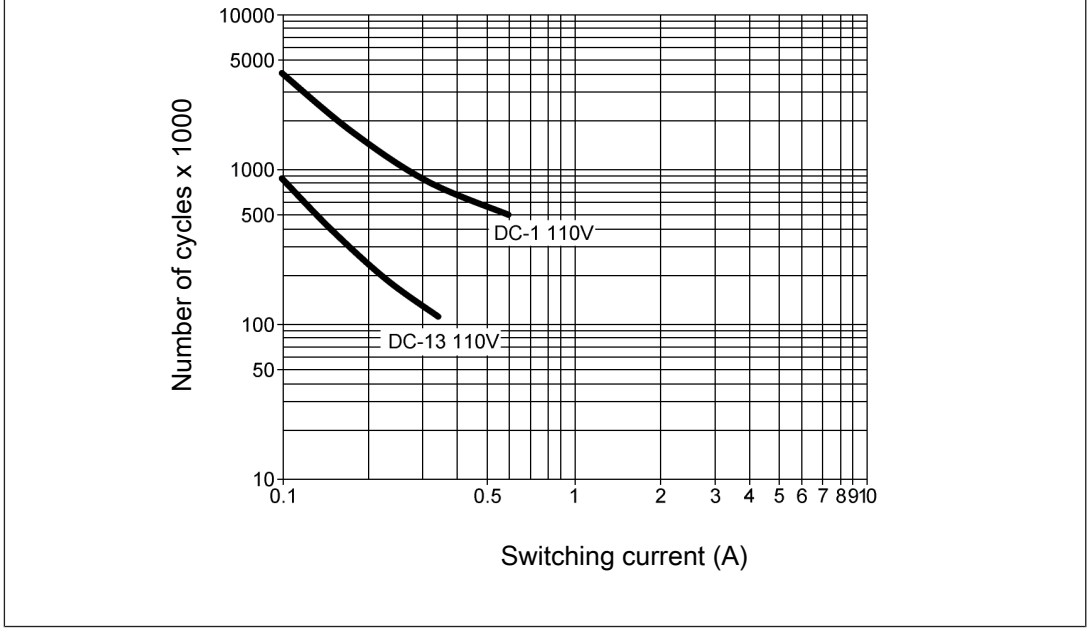

Fig.: Service life graphs at 110 VDC

Example

- Inductive load: 0.2 A
- Utilisation category: AC15
- Contact service life: 1 000 000 cycles

Provided the application to be implemented requires fewer than 1 000 000 cycles, the PFH value (see Technical details [208]) can be used in the calculation.

To increase the service life, sufficient spark suppression must be provided on all relay contacts. With capacitive loads, any power surges that occur must be noted. With DC contactors, use flywheel diodes for spark suppression.

We recommend you use semiconductor outputs to switch 24 VDC loads.

Output modules
PNOZ mo2p

Order reference

Product

Product type	Features	Order No.
PNOZ mo2p	Expansion module, 1 or 2 relay outputs, positive-guided	773 520
PNOZ mo2p coated version	Expansion module, 1 or 2 relay outputs, positive-guided, coated version	773 525

Accessories

Terminator, jumper

Product type	Features	Order No.
PNOZmulti bus terminator	Terminator	779 110
PNOZmulti bus terminator coated	Terminator, coated version	779 112
KOP-XE	Jumper	774 639
KOP-XE coated	Jumper, coated version	774 640

Connection terminals

Product type	Features	Order No.
Set spring terminals	1 set of spring-loaded terminals	783 520
Set screw terminals	1 set of screw terminals	793 520

Output modules
PNOZ mo3p



Overview

Unit features

Application of the product PNOZ mo3p:

Expansion module for connection to a base unit from the configurable control system PNOZmulti

The product has the following features:

- Can be configured in the PNOZmulti Configurator
- Semiconductor outputs:

  2 dual-pole safety outputs
  up to PL e of EN ISO 13849-1 and SIL CL 3 of EN IEC 62061, depending on the application
- Open circuit detection
- Please refer to the document "PNOZmulti System Expansion" for the PNOZmulti base units that can be connected.
- Plug-in connection terminals:
  Either spring-loaded terminal or screw terminal available as an accessory (see Order references for accessories [📖 772]).

Output modules
PNOZ mo3p

Front view

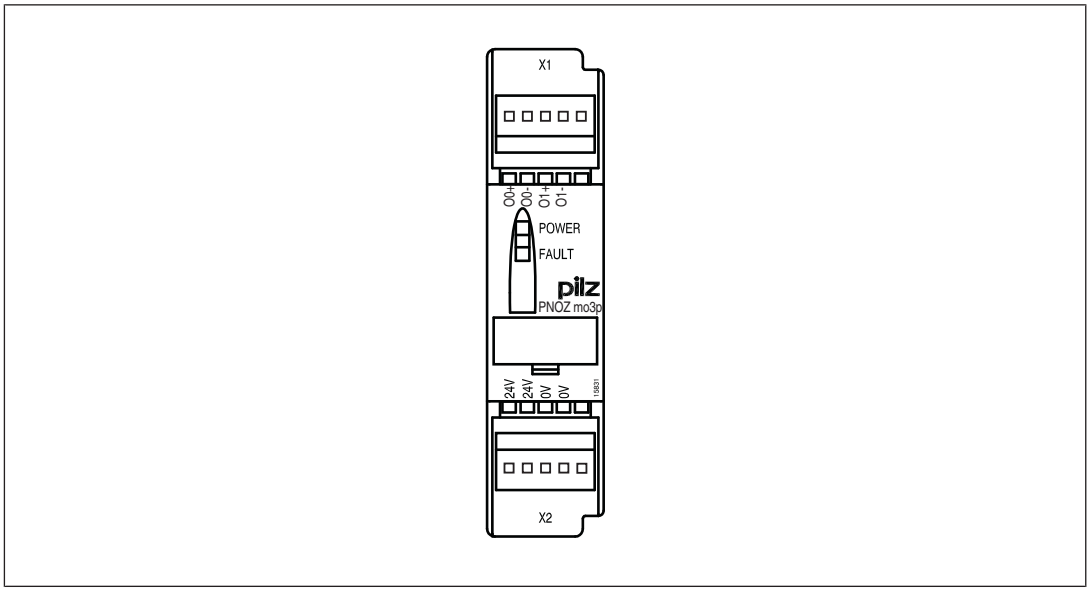

Legend:

- 0 V, 24 V
  Supply connections
- O0+, O0- and O1+, O1-
  Dual-pole semiconductor outputs

Function description

Functions

The expansion module provides additional semiconductor outputs.

The function of the outputs on the safety system depends on the safety circuit created using the PNOZmulti Configurator. A chip card is used to download the safety circuit to the base unit. The base unit has 2 microcontrollers that monitor each other. They evaluate the input circuits on the base unit and expansion modules and switch the outputs on the base unit and expansion modules accordingly.

The online help on the PNOZmulti Configurator contains descriptions of the operating modes and all the functions of the PNOZmulti safety system, plus connection examples.

Output modules
PNOZ mo3p

Block diagram

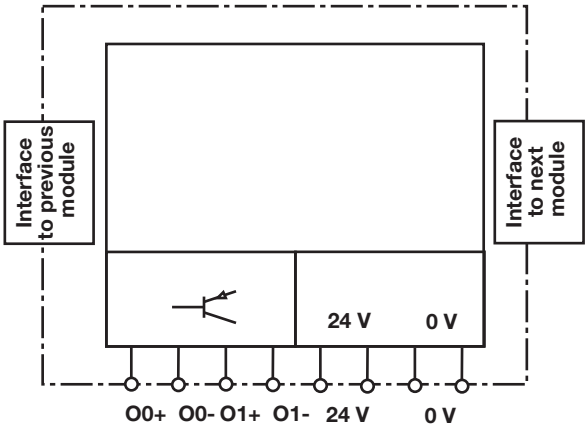

System reaction time

Calculation of the maximum reaction time between an input switching off and a linked output in the system switching off is described in the document "PNOZmulti System Expansion [30]".

Installation

Dimensions in mm

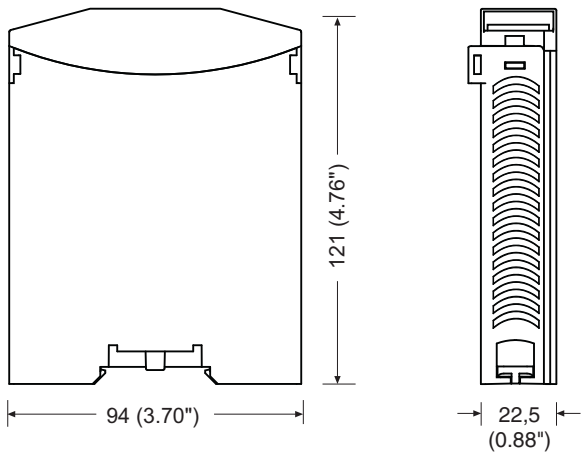

Output modules
PNOZ mo3p

Commissioning

General wiring guidelines

The wiring is defined in the circuit diagram of the PNOZmulti Configurator.

Please note:

- Information given in the Technical details [221] must be followed.
- The position of the expansion module is specified in the Hardware configuration of the PNOZmulti Configurator.
- Use copper wiring with a temperature stability of 75 °C.
- Two connection terminals are available for each of the supply connections 24 V and 0 V (semiconductor outputs), plus A1 and A2 (power supply). This means that the supply voltage can be looped through several connections. When the supply voltage is looped, the current at each terminal may not exceed 3 A.
- Please note: The supply voltage always must be present at X2, even if you do not use the semiconductor outputs.

The unit has 2 dual-pole semiconductor outputs. These may be configured as single or redundant outputs. The output assignment is defined in the PNOZmulti Configurator. Wire the output circuit as described in the table.

Connection

Supply voltage	AC	DC
	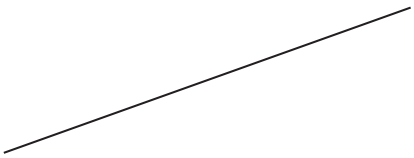	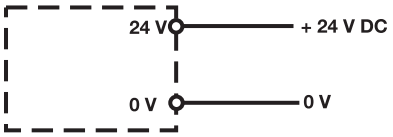

Output modules
PNOZ mo3p

Redundant output	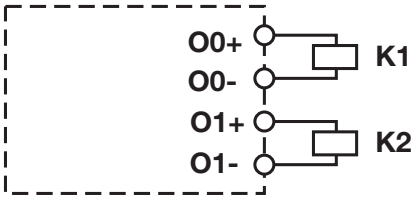	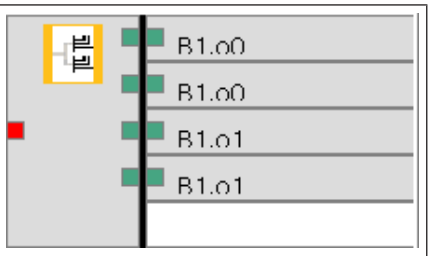
Single output	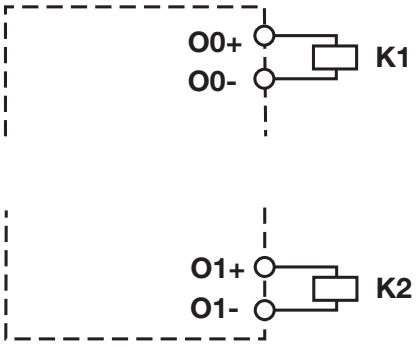	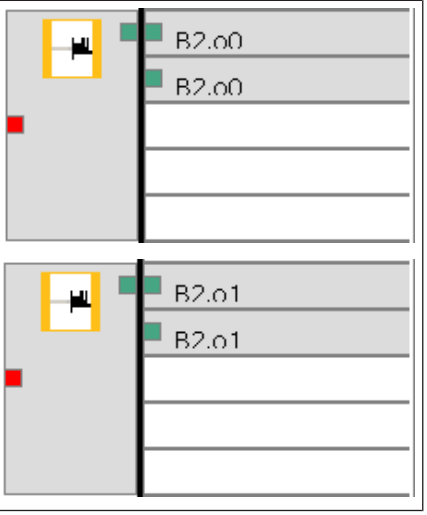

Feedback loop	Redundant output	
Contacts from external contactors	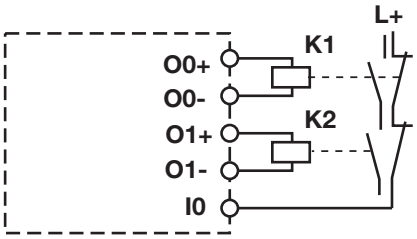	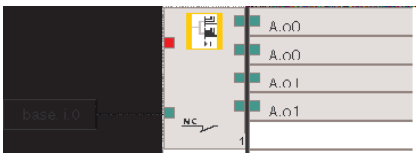

Output modules
PNOZ mo3p

Connection example

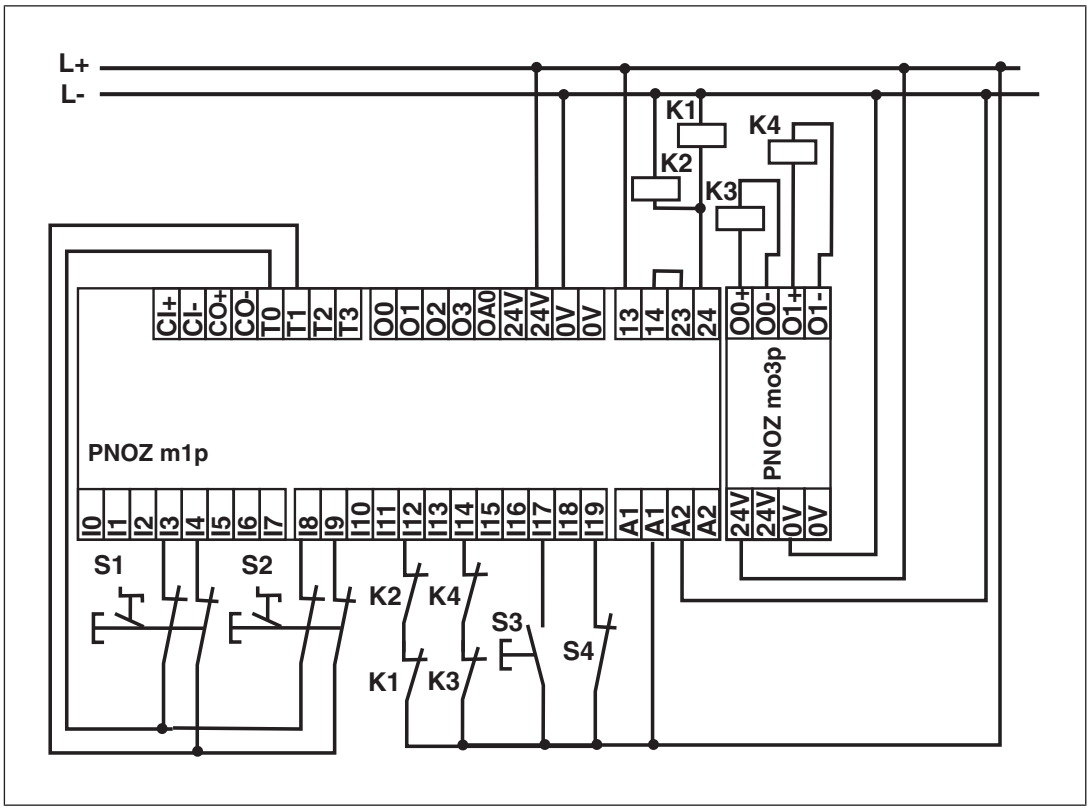

Technical details

General	
Certifications	**BG, CCC, CE, EAC (Eurasian), KOSHA, TÜV, cU-Lus Listed**
Electrical data	
Supply voltage	
for	**Supply to the SC outputs**
Voltage	**24 V**
Kind	**DC**
Voltage tolerance	**-15 %/+20 %**
Output of external power supply (DC)	**96 W**
Residual ripple DC	**5 %**
Potential isolation	**yes**

Output modules
PNOZ mo3p

Electrical data	
Supply voltage	
for	**Module supply**
internal	**Via base unit**
Voltage	**5 V**
Kind	**DC**
Voltage tolerance	**-2 %/+2 %**
Power consumption	**2,5 W**
Status indicator	**LED**
Semiconductor outputs, 2-pole	
Number	**2**
Switching capability	
Voltage	**24 V DC**
Current	**2 A**
Power	**48 W**
Residual current at "0"	**0,5 mA**
Signal level at "1"	**2 A: UB - 0,5 V DC**
Switch-off delay	**30 ms**
Open circuit detection off	**3 kOhm**
Galvanic isolation	**yes**
Short circuit-proof	**yes**
Times	
Switch-on delay	**5 s**
Supply interruption before de-energisation	**20 ms**
Environmental data	
Ambient temperature	
In accordance with the standard	**EN 60068-2-14**
Temperature range	**0 - 60 °C**
Forced convection in control cabinet off	**55 °C**
Storage temperature	
In accordance with the standard	**EN 60068-2-1/-2**
Temperature range	**-25 - 70 °C**
Climatic suitability	
In accordance with the standard	**EN 60068-2-30, EN 60068-2-78**
Humidity	**93 % r. h. at 40 °C**
Condensation during operation	**Not permitted**
EMC	**EN 61131-2**
Vibration	
In accordance with the standard	**EN 60068-2-6**
Frequency	**10 - 150 Hz**
Acceleration	**1g**

Output modules
PNOZ mo3p

Environmental data	
Shock stress	
In accordance with the standard	**EN 60068-2-27**
Acceleration	**15g**
Duration	**11 ms**
Max. operating height above sea level	**2000 m**
Airgap creepage	
In accordance with the standard	**EN 61131-2**
Overvoltage category	**III**
Pollution degree	**2**
Rated insulation voltage	**30 V**
Protection type	
In accordance with the standard	**EN 60529**
Mounting area (e.g. control cabinet)	**IP54**
Housing	**IP20**
Terminals	**IP20**
Potential isolation	
Potential isolation between	**SC output and system voltage**
Type of potential isolation	**Protective separation**
Rated surge voltage	**2500 V**
Mechanical data	
Mounting position	**horizontally on mounting rail**
DIN rail	
Top hat rail	**35 x 7,5 EN 50022**
Recess width	**27 mm**
Material	
Bottom	**PPO UL 94 V0**
Front	**ABS UL 94 V0**
Connection type	**Spring-loaded terminal, screw terminal**
Conductor cross section with screw terminals	
1 core flexible	**0,25 - 1,5 mm², 24 - 16 AWG**
2 core with the same cross section, flexible without crimp connectors or with TWIN crimp connectors	**0,25 - 0,75 mm², 24 - 20 AWG**
Torque setting with screw terminals	**0,25 Nm**
Stripping length with screw terminals	**7 mm**
Conductor cross section with spring-loaded terminals	
1 core flexible without crimp connector	**0,25 - 1,5 mm², 24 - 16 AWG**
1 core flexible with crimp connector	**0,25 - 0,75 mm², 24 - 20 AWG**
Spring-loaded terminals: Terminal points per connection	**1**
Stripping length with spring-loaded terminals	**9 mm**

Output modules
PNOZ mo3p

Mechanical data	
Dimensions	
Height	**94 mm**
Width	**22,5 mm**
Depth	**121 mm**
Weight	**127 g**

Where standards are undated, the 2020-07 latest editions shall apply.

Safety characteristic data

Operating mode	EN ISO 13849-1: 2015 PL	EN ISO 13849-1: 2015 Category	EN 62061 SIL CL	EN 62061 PFH_D [1/h]	IEC 61511 SIL	IEC 61511 PFD	EN ISO 13849-1: 2015 T_M [year]
2-channel	**PL e**	**Cat. 4**	**SIL CL 3**	**1,74E-09**	**SIL 3**	**2,48E-05**	**20**

Explanatory notes for the safety-related characteristic data:

- The SIL CL value in accordance with EN 62061 corresponds to the SIL value in accordance with EN 61508.
- T_M is the maximum mission time in accordance with EN ISO 13849-1. The value also applies as the retest interval in accordance with EN 61508-6 and IEC 61511 and as the proof test interval and mission time in accordance with EN 62061.

All the units used within a safety function must be considered when calculating the safety characteristic data.

Order reference

Product

Product type	Features	Order No.
PNOZ mo3p	Expansion module, 2 dual-pole semiconductor outputs, safe	773 510

Accessories

Connection terminals

Product type	Features	Order No.
Set spring terminals	1 set of spring-loaded terminals	783 400
Set screw terminals	1 set of screw terminals	793 400

Output modules
PNOZ mo3p

Terminator, jumper

Product type	Features	Order no.
PNOZmulti bus terminator	Terminator	779 110
KOP-XE	Jumper	774 639

Supplementary data

Maximum capacitive load C (µF) with load current I (mA) at the semiconductor outputs

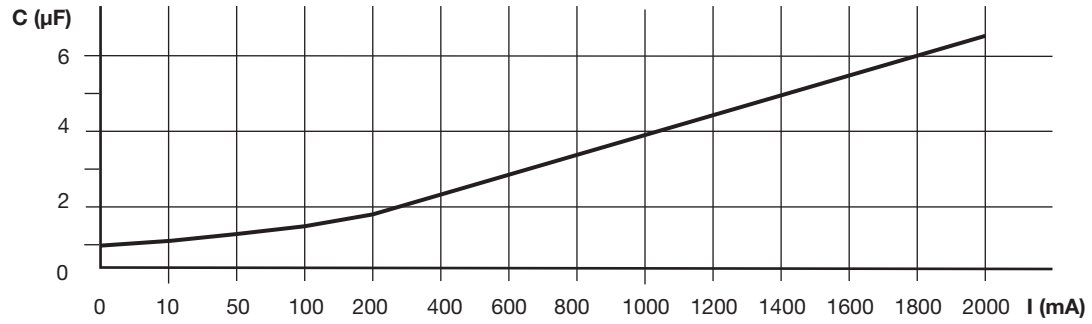

Output modules
PNOZ mo4p

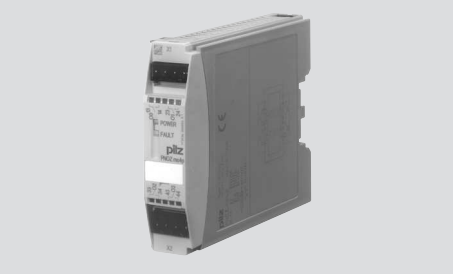

Overview

Unit features

Application of the product PNOZ mo4p:

Expansion module for connection to a base unit from the configurable control system PNOZmulti

The product has the following features:

- Positive-guided relay outputs:

  4 safety outputs
  Depending on the application, up to PL e of EN ISO 13849-1 and up to SIL CL 3 of EN IEC 62061
- Can be configured in the PNOZmulti Configurator
- Status indicators
- Max. 6 PNOZ mo4p units can be connected to the base unit
- Plug-in connection terminals:
  Either spring-loaded terminal or screw terminal available as an accessory (see Order references for accessories [📖 772]).
- Coated version:

  Increased environmental requirements (see Technical details [📖 230])

Output modules
PNOZ mo4p

Front view

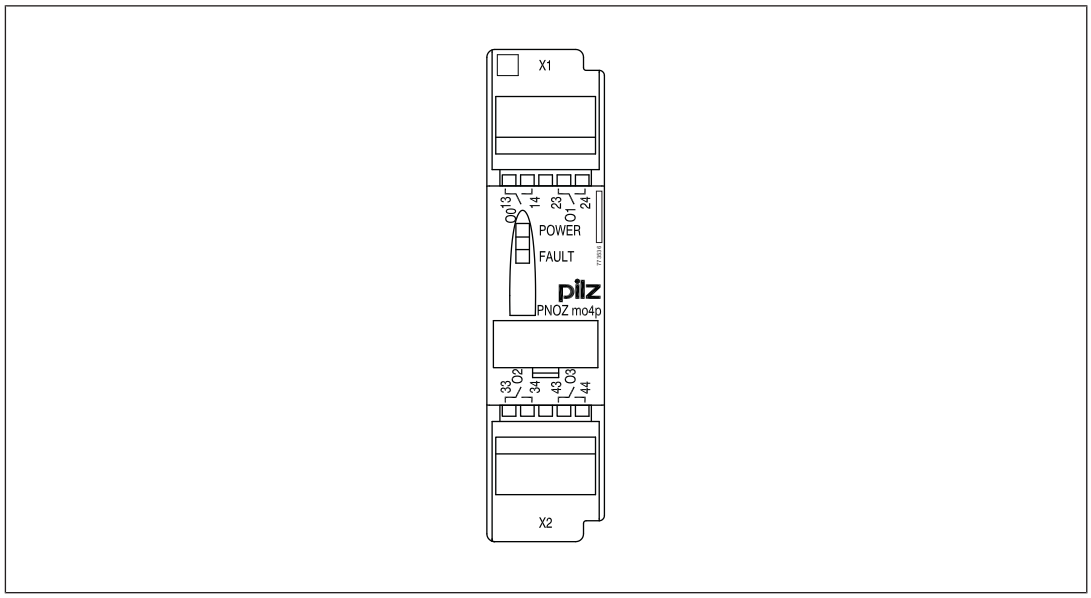

Legend:

- O0 – O3
  Relay outputs

Function description

Functions

The expansion module provides additional relay outputs.

The function of the outputs on the safety system depends on the safety circuit created using the PNOZmulti Configurator. A chip card is used to download the safety circuit to the base unit. The base unit has 2 microcontrollers that monitor each other. They evaluate the input circuits on the base unit and expansion modules and switch the outputs on the base unit and expansion modules accordingly.

The online help on the PNOZmulti Configurator contains descriptions of the operating modes and all the functions of the PNOZmulti safety system, plus connection examples.

System reaction time

Calculation of the maximum reaction time between an input switching off and a linked output in the system switching off is described in the document "PNOZmulti System Expansion [30]".

Output modules
PNOZ mo4p

Block diagram

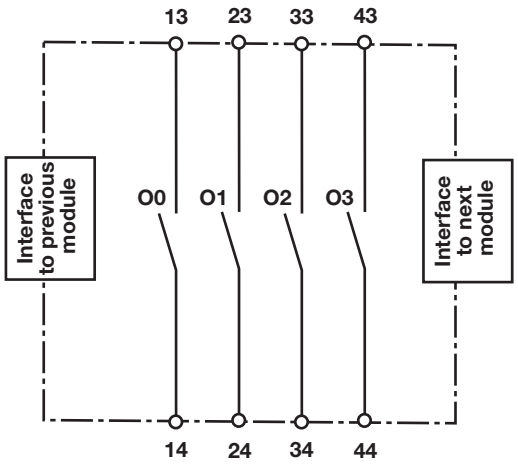

Installation

Dimensions in mm

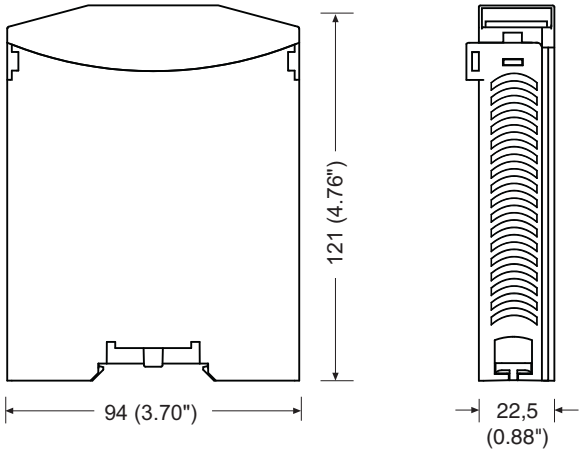

Output modules
PNOZ mo4p

Commissioning

General wiring guidelines

The wiring is defined in the circuit diagram of the PNOZmulti Configurator.

Please note:

- Information given in the Technical details [230] must be followed.
- The position of the expansion module is specified in the Hardware configuration of the PNOZmulti Configurator.
- Use copper wiring with a temperature stability of 75 °C.

Connection

Redundant	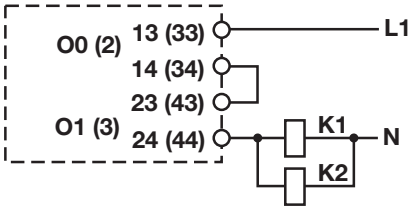	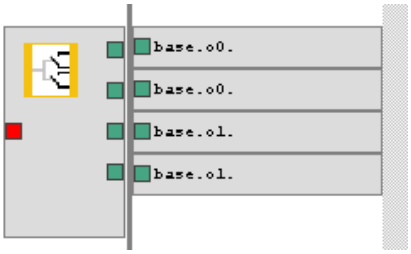
single	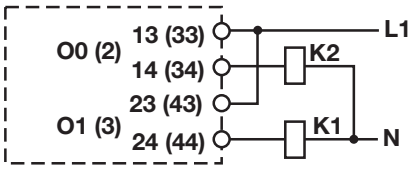	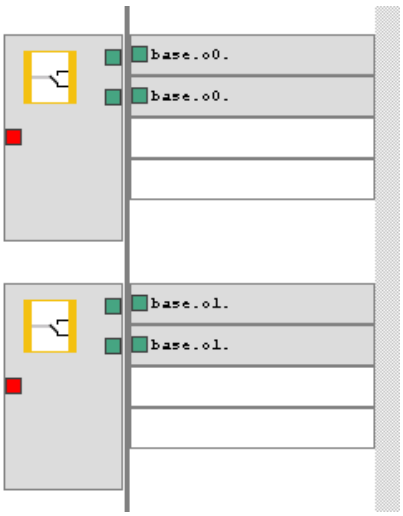

Feedback loop	Redundant output	
Contacts from external contactors	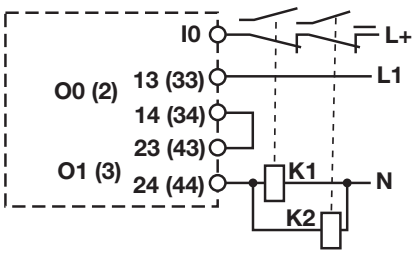	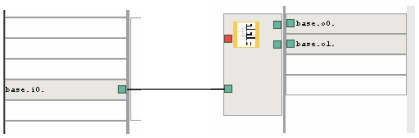

Output modules
PNOZ mo4p

Connection example

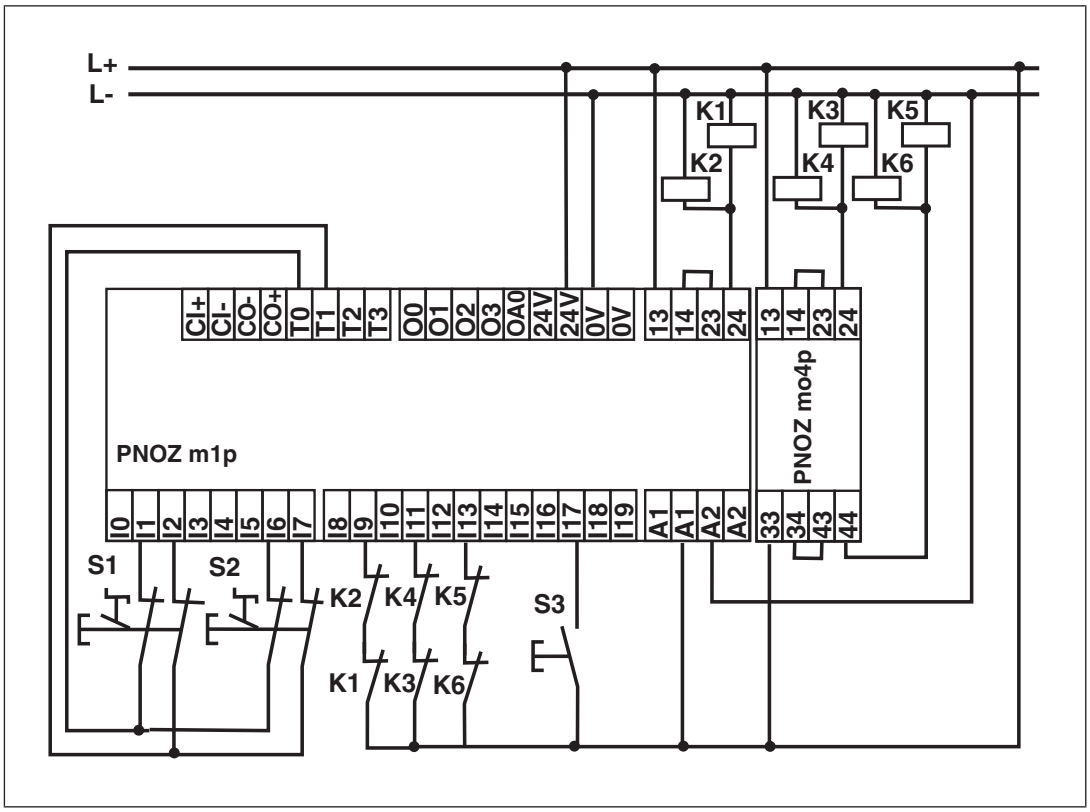

Technical details

General	773536	773537
Certifications	BG, CCC, CE, EAC (Eurasian), KOSHA, TÜV, cULus Listed	BG, CCC, CE, EAC (Eurasian), KOSHA, TÜV, cULus Listed
Electrical data	**773536**	**773537**
Supply voltage		
for	Module supply	Module supply
internal	Via base unit	Via base unit
Voltage	5 V	5 V
Kind	DC	DC
Voltage tolerance	-2 %/+2 %	-2 %/+2 %
Power consumption	2,5 W	2,5 W
Status indicator	LED	LED
Relay outputs	**773536**	**773537**
Utilisation category		
In accordance with the standard	EN 60947-4-1	EN 60947-4-1

Output modules
PNOZ mo4p

Relay outputs	773536	773537
Utilisation category of safety contacts		
AC1 at	**240 V**	**240 V**
Min. current	**10 mA**	**10 mA**
Max. current	**6 A**	**6 A**
Max. power	**1440 VA**	**1440 VA**
DC1 at	**24 V**	**24 V**
Min. current	**10 mA**	**10 mA**
Max. current	**6 A**	**6 A**
Max. power	**144 W**	**144 W**
Safety contacts, AC1 at	–	**240 V**
Max. current	–	**2 A**
Max. power	–	**480 W**
Safety contacts, DC 1 at	–	**24 V**
Max. current	–	**2 A**
Max. power	–	**48 W**
Utilisation category		
In accordance with the standard	**EN 60947-5-1**	**EN 60947-5-1**
Utilisation category of safety contacts		
AC15 at	**230 V**	**230 V**
Max. current	**3 A**	**3 A**
Max. power	**690 W**	**690 W**
DC13 (6 cycles/min) at	**24 V**	**24 V**
Max. current	**3 A**	**3 A**
Max. power	**72 W**	**72 W**
AC15 at	–	**230 V**
Max. current	–	**2 A**
Max. power	–	**460 W**
DC13 (6 cycles/min) at	–	**24 V**
Max. current	–	**2 A**
Max. power	–	**48 W**
Max. permitted total current of relay outputs at an ambient temperature of > 50 °C	**12 A**	–
Airgap creepage between		
Relay contacts	**3 mm**	**3 mm**
Relay contacts and other circuits	**5,5 mm**	**5,5 mm**

Output modules
PNOZ mo4p

Relay outputs	773536	773537
External contact fuse protection, safety contacts		
In accordance with the standard	**EN 60947-5-1**	**EN 60947-5-1**
Blow-out fuse, quick	**6 A**	**6 A**
Blow-out fuse, slow	**6 A**	**6 A**
Circuit breaker 24V AC/DC, characteristic B/C	**6 A**	**6 A**
Switch-off delay	**50 ms**	**50 ms**
Conventional thermal current	**12 A**	**12 A**
Times	**773536**	**773537**
Switch-on delay	**5 s**	**5 s**
Supply interruption before de-energisation	**20 ms**	**20 ms**
Environmental data	**773536**	**773537**
Ambient temperature		
In accordance with the standard	**EN 60068-2-14**	**EN 60068-2-14**
Temperature range	**0 - 60 °C**	**-25 - 60 °C**
Forced convection in control cabinet off	**55 °C**	–
Storage temperature		
In accordance with the standard	**EN 60068-2-1/-2**	**EN 60068-2-1/-2**
Temperature range	**-25 - 70 °C**	**-25 - 70 °C**
Climatic suitability		
In accordance with the standard	**EN 60068-2-30, EN 60068-2-78**	**EN 60068-2-30, EN 60068-2-78**
Humidity	**93 % r. h. at 40 °C**	**93 % r. h. at 40 °C**
Condensation during operation	**Not permitted**	**Short-term (only with separated extra low voltage)**
EMC	**EN 61131-2**	**EN 61131-2**
Vibration		
In accordance with the standard	**EN 60068-2-6**	**EN 60068-2-6**
Frequency	**10 - 150 Hz**	**5 - 500 Hz**
Acceleration	**1g**	**1g**
Broadband noise		
In accordance with the standard	–	**EN 60068-2-64**
Frequency	–	**5 - 500 Hz**
Acceleration	–	**1,9grms**
Corrosive gas check		
SO2: Concentration 10 ppm, duration 10 days, passive	–	**DIN V 40046-36**
H2S: Concentration 1 ppm, duration 10 days, passive	–	**DIN V 40046-37**

Output modules
PNOZ mo4p

Environmental data	773536	773537
Shock stress		
In accordance with the standard	**EN 60068-2-27**	**EN 60068-2-27**
Acceleration	**15g**	**15g**
Duration	**11 ms**	**11 ms**
Max. operating height above sea level	**2000 m**	**2000 m**
Airgap creepage		
In accordance with the standard	**EN 61131-2**	**EN 61131-2**
Overvoltage category	**III**	**III**
Pollution degree	**2**	**2**
Rated insulation voltage	**250 V**	**250 V**
Rated impulse withstand voltage	**6 kV**	**6 kV**
Protection type		
In accordance with the standard	**EN 60529**	**EN 60529**
Mounting area (e.g. control cabinet)	**IP54**	**IP54**
Housing	**IP20**	**IP20**
Terminals	**IP20**	**IP20**
Mechanical data	**773536**	**773537**
Mounting position	**horizontally on mounting rail**	**horizontally on mounting rail**
DIN rail		
Top hat rail	**35 x 7,5 EN 50022**	**35 x 7,5 EN 50022**
Recess width	**27 mm**	**27 mm**
Material		
Bottom	**PPO UL 94 V0**	**PPO UL 94 V0**
Front	**ABS UL 94 V0**	**ABS UL 94 V0**
Connection type	**Spring-loaded terminal, screw terminal**	**Spring-loaded terminal, screw terminal**
Conductor cross section with screw terminals (relay outputs)		
1 core flexible	**0,25 - 2,5 mm², 24 - 12 AWG**	**0,25 - 2,5 mm², 24 - 12 AWG**
2 core with the same cross section, flexible without crimp connectors or with TWIN crimp connectors	**0,25 - 1,5 mm², 24 - 16 AWG**	**0,25 - 1,5 mm², 24 - 16 AWG**
Torque setting with screw terminals (relay outputs)	**0,5 Nm**	**0,5 Nm**
Stripping length with screw terminals (relay outputs)	**8 mm**	**8 mm**

Output modules
PNOZ mo4p

Mechanical data	773536	773537
Conductor cross section with spring-loaded terminals (relay outputs)		
1 core flexible without crimp connector	**0,25 - 2,5 mm², 24 - 12 AWG**	**0,25 - 2,5 mm², 24 - 12 AWG**
1 core flexible with crimp connector	**0,25 - 1,5 mm², 24 - 16 AWG**	**0,25 - 1,5 mm², 24 - 16 AWG**
Spring-loaded terminals: Terminal points per connection	**1**	**1**
Stripping length with spring-loaded terminals (relay outputs)	**10 mm**	**10 mm**
Dimensions		
Height	**94 mm**	**94 mm**
Width	**22,5 mm**	**22,5 mm**
Depth	**121 mm**	**121 mm**
Weight	**204 g**	**204 g**

Where standards are undated, the 2020-07 latest editions shall apply.

Safety characteristic data

Operating mode	EN ISO 13849-1: 2015 PL	EN ISO 13849-1: 2015 Category	EN 62061 SIL CL	EN 62061 PFH_D [1/h]	IEC 61511 SIL	IEC 61511 PFD	EN ISO 13849-1: 2015 T_M [year]
1-channel	**PL c**	**Cat. 1**	**-**	**2,90E-08**	**-**	**2,60E-03**	**20**
2-channel	**PL e**	**Cat. 4**	**SIL CL 3**	**3,00E-10**	**SIL 3**	**5,20E-07**	**20**

Explanatory notes for the safety-related characteristic data:

- The SIL CL value in accordance with EN 62061 corresponds to the SIL value in accordance with EN 61508.
- T_M is the maximum mission time in accordance with EN ISO 13849-1. The value also applies as the retest interval in accordance with EN 61508-6 and IEC 61511 and as the proof test interval and mission time in accordance with EN 62061.

All the units used within a safety function must be considered when calculating the safety characteristic data.

The PFH value depends on the switch frequency and the load of the relay output.
If the service life graphs are not accessible, the stated PFH value can be used irrespective of the switch frequency and the load, as the PFH value already considers the relay's B10d value as well as the failure rates of the other components.

Output modules
PNOZ mo4p

Supplementary data

Service life graph for the relay contacts

The service life graphs indicate the number of cycles from which failures due to wear must be expected. The wear is mainly caused by the electrical load; the mechanical load is negligible.

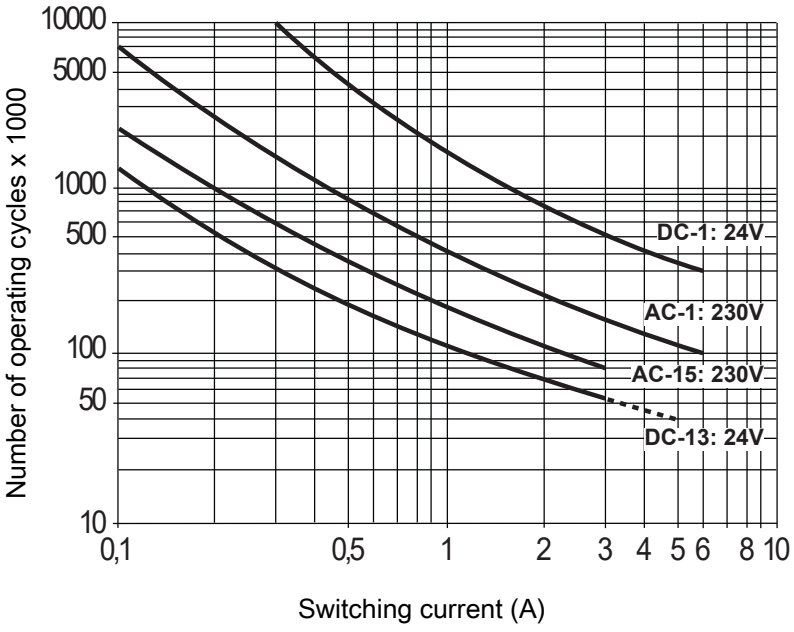

Fig.: Service life graphs at 24 VDC and 230 VAC

Output modules
PNOZ mo4p

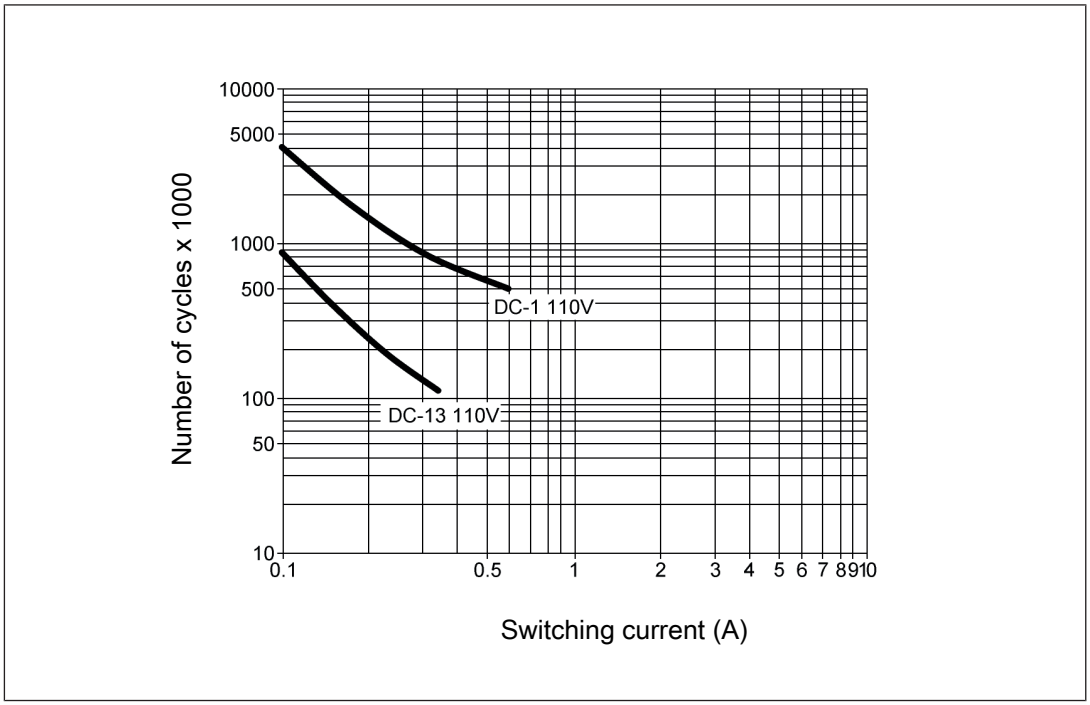

Fig.: Service life graphs at 110 VDC

Example

- Inductive load: 0.2 A
- Utilisation category: AC15
- Contact service life: 1 000 000 cycles

Provided the application to be implemented requires fewer than 1 000 000 cycles, the PFH value (see Technical details [📖 230]) can be used in the calculation.

To increase the service life, sufficient spark suppression must be provided on all relay contacts. With capacitive loads, any power surges that occur must be noted. With DC contactors, use flywheel diodes for spark suppression.

We recommend you use semiconductor outputs to switch 24 VDC loads.

Output modules
PNOZ mo4p

Order reference

Product

Product type	Features	Order No.
PNOZ mo4p	Expansion module, 2 or 4 relay outputs, positive-guided	773 536
PNOZ mo4p coated version	Expansion module, 2 or 4 relay outputs, positive-guided, coated version	773 537

Accessories

Connection terminals

Product type	Features	Order No.
Set spring terminals	1 set of spring-loaded terminals	783 536
Set screw terminals	1 set of screw terminals	793 536

Terminator, jumper

Product type	Features	Order No.
PNOZmulti bus terminator	Terminator	779 110
PNOZmulti bus terminator coated	Terminator, coated version	779 112
KOP-XE	Jumper	774 639
KOP-XE coated	Jumper, coated version	774 640

Output modules
PNOZ mo5p

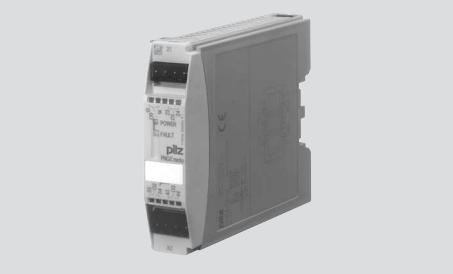

Overview

Unit features

The product has the following features:

- Can be configured in the PNOZmulti Configurator
- Positive-guided relay outputs, diverse:

  4 safety outputs
  Depending on the application, up to PL e of EN ISO 13849-1 and up to SIL CL 3 of EN IEC 62061
- Suitable for controlling the safety valves on a burner in accordance with EN 50156
- Status indicators
- Plug-in connection terminals (either cage clamp terminal or screw terminal)
- Max. 8 expansion modules and one fieldbus module can be connected to a base unit. A max. 6 of these may be the expansion modules PNOZ mo5p, PNOZ mo4p, PNOZ mo2p and PNOZ mo1p.

Output modules
PNOZ mo5p

Front view

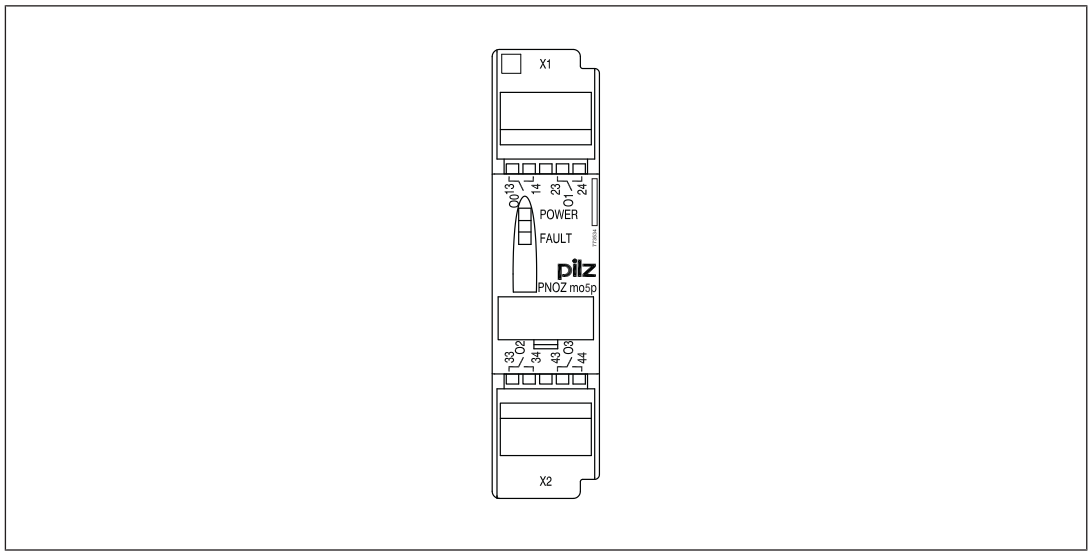

Key:

- O0 – O3
  Relay outputs

Function description

Integrated protection mechanisms

The relay meets the following safety requirements:

- The circuit is redundant with built-in self-monitoring.
- The safety device remains effective in the case of a component failure.
- The relay contacts meet the requirements for protective separation through increased insulation compared with all other circuits in the safety system.
- A defective relay contact will be detected during switching.
- The relays are diverse in design.

Operation

The expansion module provides additional relay outputs.

The function of the outputs on the safety system depends on the safety circuit created using the PNOZmulti Configurator. A chip card is used to download the safety circuit to the base unit. The base unit has 2 microcontrollers that monitor each other. They evaluate the input circuits on the base unit and expansion modules and switch the outputs on the base unit and expansion modules accordingly.

The online help on the PNOZmulti Configurator contains descriptions of the operating modes and all the functions of the PNOZmulti safety system, plus connection examples.

Output modules
PNOZ mo5p

System reaction time

Calculation of the maximum reaction time between an input switching off and a linked output in the system switching off is described in the document "PNOZmulti System Expansion [30]".

Block diagram

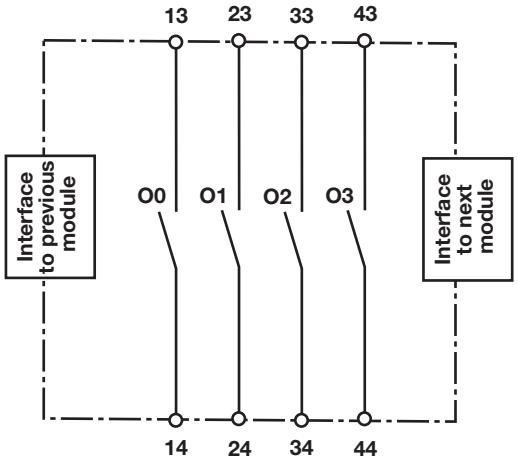

Installation

Dimensions in mm

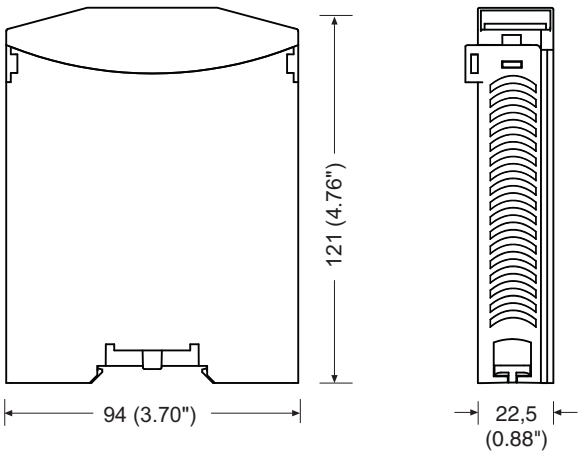

Output modules
PNOZ mo5p

Commissioning

General wiring guidelines

The wiring is defined in the circuit diagram of the PNOZmulti Configurator.

Please note:

- Information given in the Technical details [243] must be followed.
- The position of the expansion module is specified in the Hardware configuration of the PNOZmulti Configurator.
- Use copper wiring with a temperature stability of 75 °C.

Connection

Redundant	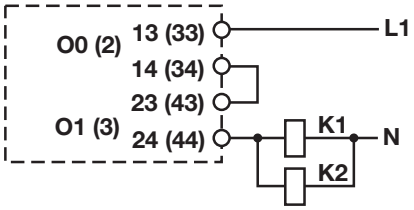	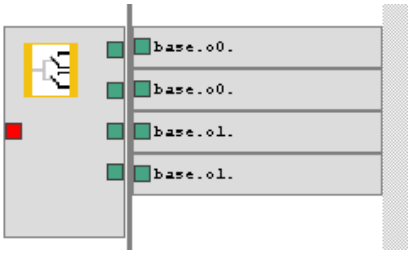
single	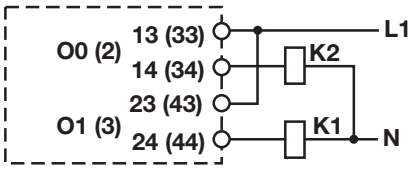	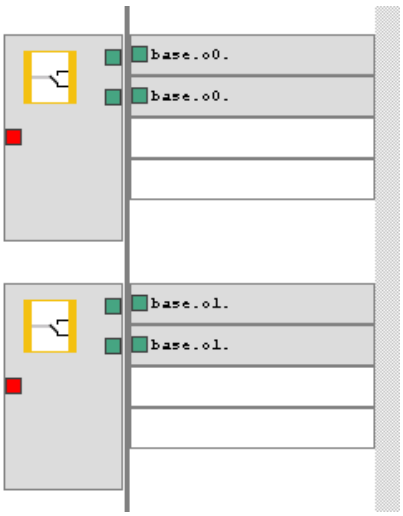

Feedback loop	Redundant output	
Contacts from external contactors	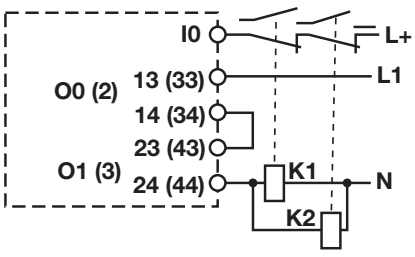	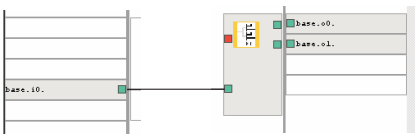

Output modules
PNOZ mo5p

Connecting the safety valves on a burner in accordance with EN 50156

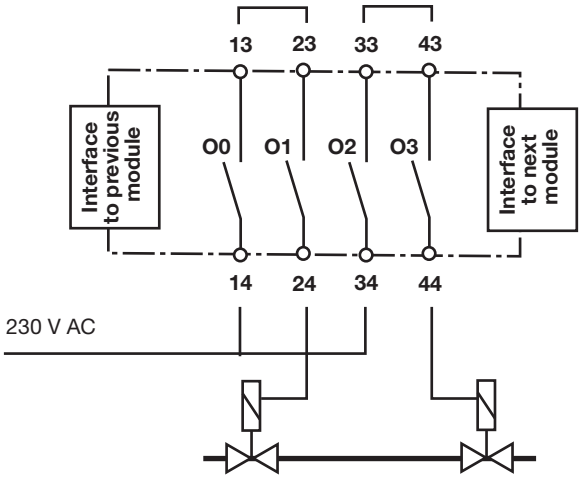

Output modules
PNOZ mo5p

Connection example

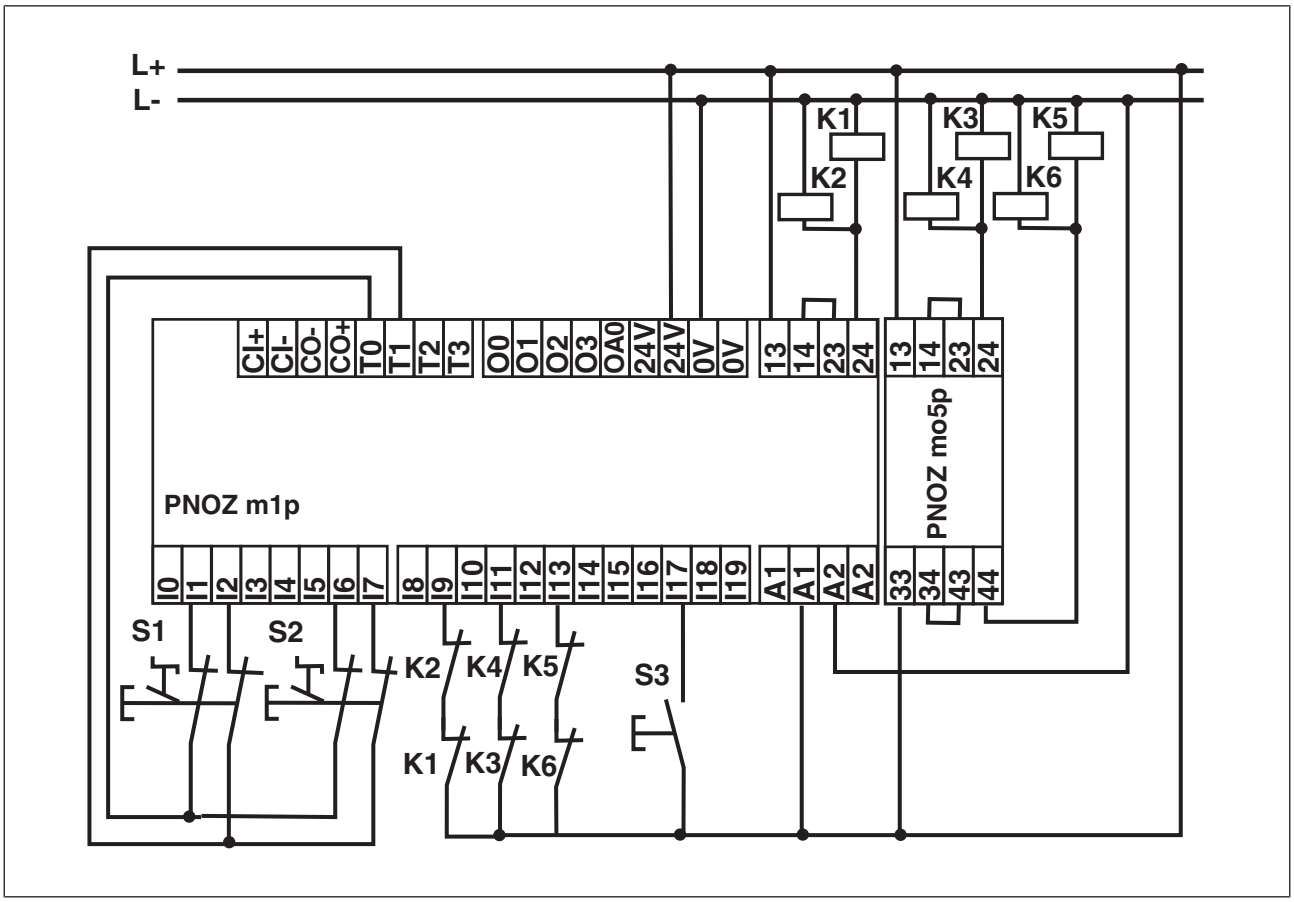

Technical details

General	
Certifications	**BG, CCC, CE, EAC (Eurasian), TÜV, cULus Listed**
Electrical data	
Supply voltage	
for	**Module supply**
internal	**Via base unit**
Voltage	**5 V**
Kind	**DC**
Voltage tolerance	**-2 %/+2 %**
Power consumption	**3,5 W**
Status indicator	**LED**
Relay outputs	
Utilisation category	
In accordance with the standard	**EN 60947-4-1**

Output modules
PNOZ mo5p

Relay outputs	
Utilisation category of safety contacts	
AC1 at	**240 V**
Min. current	**10 mA**
Max. current	**1,5 A**
Max. power	**360 VA**
DC1 at	**24 V**
Min. current	**10 mA**
Max. current	**6 A**
Max. power	**144 W**
Utilisation category	
In accordance with the standard	**EN 60947-5-1**
Utilisation category of safety contacts	
AC15 at	**230 V**
Max. current	**0,6 A**
Max. power	**138 W**
DC13 (6 cycles/min) at	**24 V**
Max. current	**0,4 A**
Max. power	**9 W**
Airgap creepage between	
Relay contacts	**3 mm**
Relay contacts and other circuits	**5,5 mm**
External contact fuse protection, safety contacts	
In accordance with the standard	**EN 60947-5-1**
Blow-out fuse, quick	**6 A**
Blow-out fuse, slow	**6 A**
Circuit breaker 24V AC/DC, characteristic B/C	**6 A**
Switch-off delay	**50 ms**
Conventional thermal current	**12 A**
Times	
Switch-on delay	**5 s**
Supply interruption before de-energisation	**20 ms**
Environmental data	
Ambient temperature	
In accordance with the standard	**EN 60068-2-14**
Temperature range	**0 - 60 °C**
Forced convection in control cabinet off	**55 °C**
Storage temperature	
In accordance with the standard	**EN 60068-2-1/-2**
Temperature range	**-25 - 70 °C**

Output modules
PNOZ mo5p

Environmental data	
Climatic suitability	
In accordance with the standard	**EN 60068-2-30, EN 60068-2-78**
Humidity	**93 % r. h. at 40 °C**
Condensation during operation	**Not permitted**
EMC	**EN 61131-2**
Vibration	
In accordance with the standard	**EN 60068-2-6**
Frequency	**10 - 150 Hz**
Acceleration	**1g**
Shock stress	
In accordance with the standard	**EN 60068-2-27**
Acceleration	**15g**
Duration	**11 ms**
Max. operating height above sea level	**2000 m**
Airgap creepage	
In accordance with the standard	**EN 61131-2**
Overvoltage category	**III**
Pollution degree	**2**
Rated insulation voltage	**250 V**
Rated impulse withstand voltage	**6 kV**
Protection type	
In accordance with the standard	**EN 60529**
Mounting area (e.g. control cabinet)	**IP54**
Housing	**IP20**
Terminals	**IP20**
Mechanical data	
Mounting position	**horizontally on mounting rail**
DIN rail	
Top hat rail	**35 x 7,5 EN 50022**
Recess width	**27 mm**
Material	
Bottom	**PPO UL 94 V0**
Front	**ABS UL 94 V0**
Connection type	**Spring-loaded terminal, screw terminal**
Conductor cross section with screw terminals (relay outputs)	
1 core flexible	**0,25 - 2,5 mm², 24 - 12 AWG**
2 core with the same cross section, flexible without crimp connectors or with TWIN crimp connectors	**0,25 - 1,5 mm², 24 - 16 AWG**
Torque setting with screw terminals (relay outputs)	**0,5 Nm**
Stripping length with screw terminals (relay outputs)	**8 mm**

Output modules
PNOZ mo5p

Mechanical data	
Conductor cross section with spring-loaded terminals (relay outputs)	
1 core flexible without crimp connector	**0,25 - 2,5 mm², 24 - 12 AWG**
1 core flexible with crimp connector	**0,25 - 1,5 mm², 24 - 16 AWG**
Spring-loaded terminals: Terminal points per connection	**1**
Stripping length with spring-loaded terminals (relay outputs)	**10 mm**
Dimensions	
Height	**94 mm**
Width	**22,5 mm**
Depth	**121 mm**
Weight	**198 g**

Where standards are undated, the 2020-07 latest editions shall apply.

Output modules
PNOZ mo5p

Safety characteristic data

Operating mode	EN ISO 13849-1: 2015 PL	EN ISO 13849-1: 2015 Category	EN 62061 SIL CL	EN 62061 PFH_D [1/h]	IEC 61511 SIL	IEC 61511 PFD	EN ISO 13849-1: 2015 T_M [year]
1-channel	**PL c**	**Cat. 1**	**-**	**2,90E-08**	**-**	**2,60E-03**	**20**
2-channel	**PL e**	**Cat. 4**	**SIL CL 3**	**3,00E-10**	**SIL 3**	**5,20E-07**	**20**

Explanatory notes for the safety-related characteristic data:

- The SIL CL value in accordance with EN 62061 corresponds to the SIL value in accordance with EN 61508.
- T_M is the maximum mission time in accordance with EN ISO 13849-1. The value also applies as the retest interval in accordance with EN 61508-6 and IEC 61511 and as the proof test interval and mission time in accordance with EN 62061.

All the units used within a safety function must be considered when calculating the safety characteristic data.

The PFH value depends on the switch frequency and the load of the relay output.
If the service life graphs are not accessible, the stated PFH value can be used irrespective of the switch frequency and the load, as the PFH value already considers the relay's B10d value as well as the failure rates of the other components.

Output modules
PNOZ mo5p

Supplementary data

Service life graph for the relay contacts

The service life graphs indicate the number of cycles from which failures due to wear must be expected. The wear is mainly caused by the electrical load; the mechanical load is negligible.

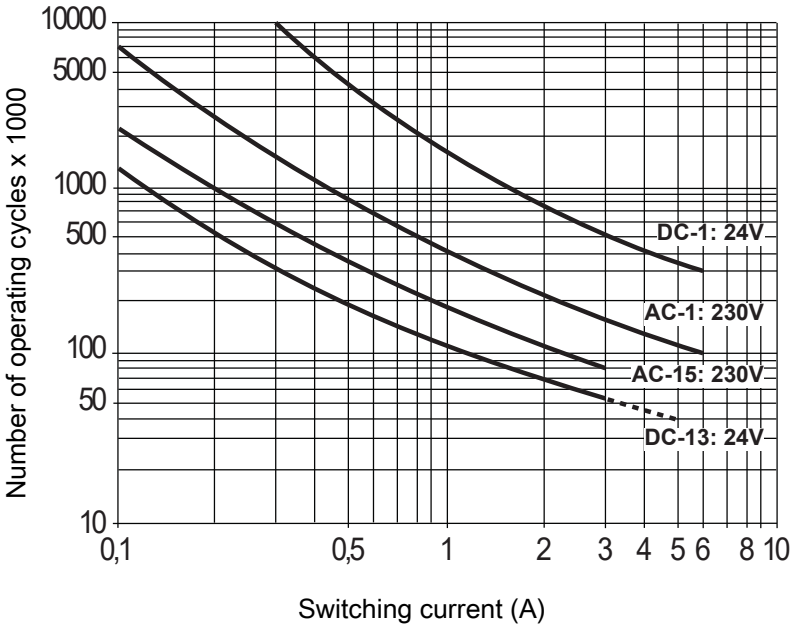

Fig.: Service life graphs at 24 VDC and 230 VAC

Output modules
PNOZ mo5p

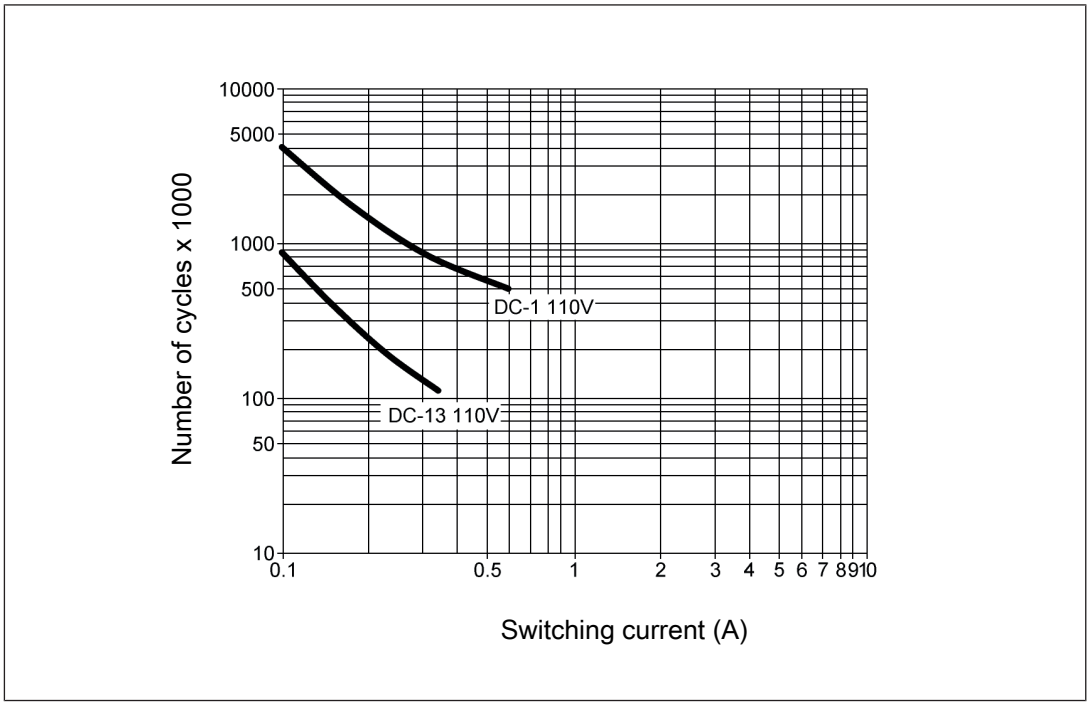

Fig.: Service life graphs at 110 VDC

Example

- Inductive load: 0.2 A
- Utilisation category: AC15
- Contact service life: 1 000 000 cycles

Provided the application to be implemented requires fewer than 1 000 000 cycles, the PFH value (see Technical details [📖 243]) can be used in the calculation.

To increase the service life, sufficient spark suppression must be provided on all relay contacts. With capacitive loads, any power surges that occur must be noted. With DC contactors, use flywheel diodes for spark suppression.

We recommend you use semiconductor outputs to switch 24 VDC loads.

Output modules
PNOZ mo5p

Order reference

Product

Product type	Features	Order No.
PNOZ mo5p	Expansion module, 2 or 4 relay outputs, positive-guided, diverse	773 534

Accessories

Connection terminals

Product type	Features	Order No.
Set spring terminals	1 set of spring-loaded terminals	783 536
Set screw terminals	1 set of screw terminals	793 536

Terminator, jumper

Product type	Features	Order no.
PNOZmulti bus terminator	Terminator	779 110
KOP-XE	Jumper	774 639

Output modules
PNOZ mc1p



Overview

Unit features

Application of the product PNOZ mc1p:

Expansion module for connection to a base unit from the configurable control system PNOZmulti

The product has the following features:

- Can be configured in the PNOZmulti Configurator
- Semiconductor outputs:
  - 16 auxiliary outputs
- Status indicators
- Coated version:

  Increased environmental requirements (see Technical details [📖 255])
- Plug-in connection terminals:
  Either spring-loaded terminal or screw terminal available as an accessory (see Order references for accessories [📖 772]).
- Please refer to the document "PNOZmulti System Expansion" for details of the base units that can be connected.

Output modules
PNOZ mc1p

Front view

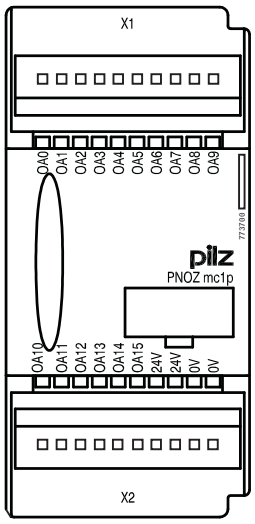

Function description

Functions

The expansion module operates as a signal module with non-safety-related outputs.

The function of the outputs on the safety system depends on the safety circuit created using the PNOZmulti Configurator. A chip card is used to download the safety circuit to the base unit. The base unit has 2 microcontrollers that monitor each other. They evaluate the input circuits on the base unit and expansion modules and switch the outputs on the base unit and expansion modules accordingly.

The online help on the PNOZmulti Configurator contains descriptions of the operating modes and all the functions of the PNOZmulti safety system, plus connection examples.

Output modules
PNOZ mc1p

Block diagram

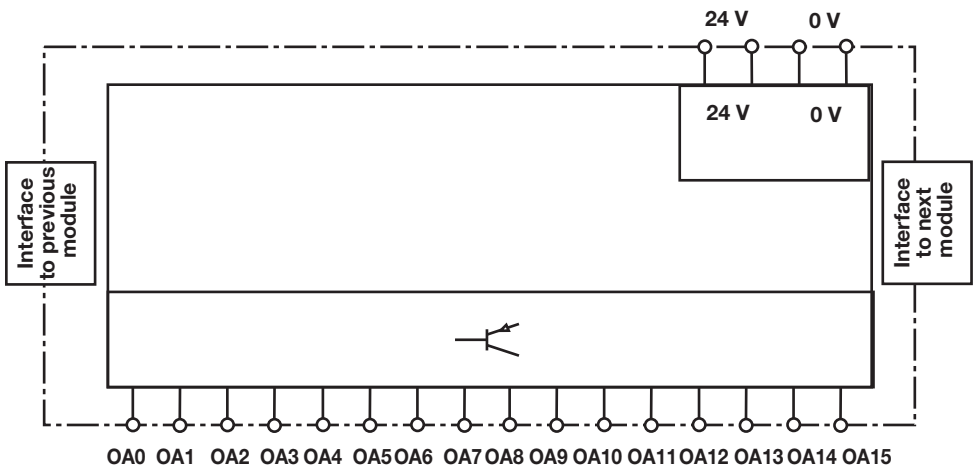

Installation

Dimensions

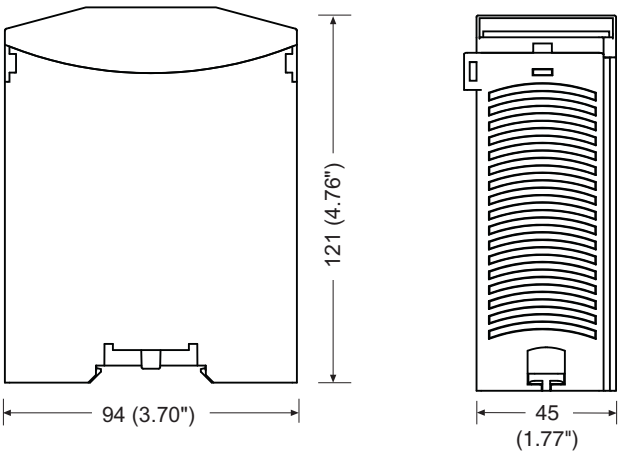

Output modules
PNOZ mc1p

Commissioning

General wiring guidelines

The wiring is defined in the circuit diagram in the Configurator.

Please note:

- 2 connection terminals are available for each of the supply connections 24 V and 0 V. This means that the supply voltage can be looped through several connections. The current at each terminal may not exceed 3 A.
- Outputs OA0 to OA15 are auxiliary outputs using semiconductor technology.
- Use copper wiring with a temperature stability of 75 °C.
- Information given in the Technical details [📖 255] must be followed.

Connection

Supply voltage	AC	DC
	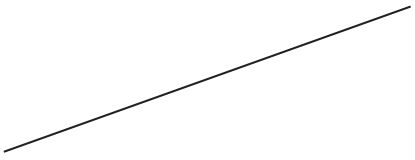	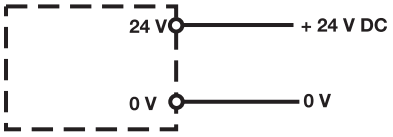

Supply voltage

	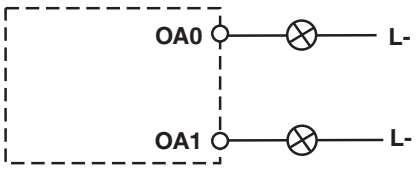	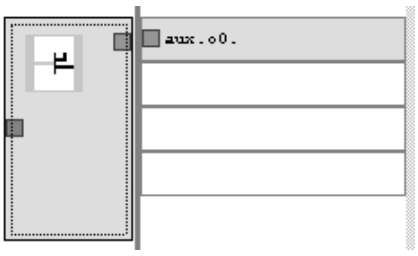

Semiconductor outputs

Output modules
PNOZ mc1p

Technical details

General	773700	773705
Certifications	BG, CCC, CE, EAC (Eurasian), KOSHA, TÜV, cULus Listed	BG, CCC, CE, EAC (Eurasian), KOSHA, TÜV, cULus Listed
Electrical data	**773700**	**773705**
Supply voltage		
for	Supply to the SC outputs	Supply to the SC outputs
Voltage	24 V	24 V
Kind	DC	DC
Voltage tolerance	-15 %/+20 %	-15 %/+20 %
Output of external power supply (DC)	192 W	192 W
Potential isolation	yes	yes
Supply voltage		
for	Module supply	Module supply
internal	Via base unit	Via base unit
Voltage	5 V	5 V
Kind	DC	DC
Voltage tolerance	-2 %/+2 %	-2 %/+2 %
Power consumption	0,6 W	0,6 W
Status indicator	LED	LED
Semiconductor outputs (standard)	**773700**	**773705**
Number	16	16
Switching capability		
Voltage	24 V	24 V
Current	0,5 A	0,5 A
Power	12 W	12 W
Max. permitted overall performance of semiconductor outputs at an ambient temperature of > 50 °C	–	144 W
Galvanic isolation	yes	yes
Short circuit-proof	yes	yes
Residual current at "0"	0,5 mA	0,5 mA
Signal level at "1"	UB - 0.5 VDC at 0.5 A	UB - 0.5 VDC at 0.5 A
Times	**773700**	**773705**
Switch-on delay	5 s	5 s
Supply interruption before de-energisation	20 ms	20 ms

Output modules
PNOZ mc1p

Environmental data	773700	773705
Ambient temperature		
In accordance with the standard	**EN 60068-2-14**	**EN 60068-2-14**
Temperature range	**0 - 60 °C**	**-25 - 60 °C**
Forced convection in control cabinet off	**55 °C**	–
Storage temperature		
In accordance with the standard	**EN 60068-2-1/-2**	**EN 60068-2-1/-2**
Temperature range	**-25 - 70 °C**	**-25 - 70 °C**
Climatic suitability		
In accordance with the standard	**EN 60068-2-30, EN 60068-2-78**	**EN 60068-2-30, EN 60068-2-78**
Humidity	**93 % r. h. at 40 °C**	**93 % r. h. at 40 °C**
Condensation during operation	**Not permitted**	**Short-term**
EMC	**EN 61131-2**	**EN 61131-2**
Vibration		
In accordance with the standard	**EN 60068-2-6**	**EN 60068-2-6**
Frequency	**10 - 150 Hz**	**10 - 150 Hz**
Acceleration	**1g**	**1g**
Corrosive gas check		
SO2: Concentration 10 ppm, duration 10 days, passive	–	**DIN V 40046-36**
H2S: Concentration 1 ppm, duration 10 days, passive	–	**DIN V 40046-37**
Shock stress		
In accordance with the standard	**EN 60068-2-27**	**EN 60068-2-27**
Acceleration	**15g**	**15g**
Duration	**11 ms**	**11 ms**
Max. operating height above sea level	**2000 m**	**2000 m**
Airgap creepage		
In accordance with the standard	**EN 61131-2**	**EN 61131-2**
Overvoltage category	**III**	**III**
Pollution degree	**2**	**2**
Rated insulation voltage	**30 V**	**30 V**
Protection type		
In accordance with the standard	**EN 60529**	**EN 60529**
Mounting area (e.g. control cabinet)	**IP54**	**IP54**
Housing	**IP20**	**IP20**
Terminals	**IP20**	**IP20**
Mechanical data	**773700**	**773705**
Mounting position	**horizontally on mounting rail**	**horizontally on mounting rail**

Output modules
PNOZ mc1p

Mechanical data	773700	773705
DIN rail		
Top hat rail	**35 x 7,5 EN 50022**	**35 x 7,5 EN 50022**
Recess width	**27 mm**	**27 mm**
Material		
Bottom	**PPO UL 94 V0**	**PPO UL 94 V0**
Front	**ABS UL 94 V0**	**ABS UL 94 V0**
Connection type	**Spring-loaded terminal, screw terminal**	**Spring-loaded terminal, screw terminal**
Conductor cross section with screw terminals		
1 core flexible	**0,25 - 1,5 mm², 24 - 16 AWG**	**0,25 - 1,5 mm², 24 - 16 AWG**
2 core with the same cross section, flexible without crimp connectors or with TWIN crimp connectors	**0,25 - 0,75 mm², 24 - 20 AWG**	**0,25 - 0,75 mm², 24 - 20 AWG**
Torque setting with screw terminals	**0,25 Nm**	**0,25 Nm**
Stripping length with screw terminals	**7 mm**	**7 mm**
Conductor cross section with spring-loaded terminals		
1 core flexible without crimp connector	**0,25 - 1,5 mm², 24 - 16 AWG**	**0,25 - 1,5 mm², 24 - 16 AWG**
1 core flexible with crimp connector	**0,25 - 0,75 mm², 24 - 20 AWG**	**0,25 - 0,75 mm², 24 - 20 AWG**
Spring-loaded terminals: Terminal points per connection	**1**	**1**
Stripping length with spring-loaded terminals	**9 mm**	**9 mm**
Dimensions		
Height	**94 mm**	**94 mm**
Width	**45 mm**	**45 mm**
Depth	**121 mm**	**121 mm**
Weight	**164 g**	**166 g**

Where standards are undated, the 2020-07 latest editions shall apply.

Output modules
PNOZ mc1p

Order reference

Product

Product type	Features	Order No.
PNOZ mc1p	Expansion module, 16 semiconductor outputs, standard	773 700
PNOZ mc1p coated version	Expansion module, 16 semiconductor outputs, standard, coated version	773 705

Accessories

Terminator, jumper

Product type	Features	Order No.
PNOZmulti bus terminator	Terminator	779 110
PNOZmulti bus terminator coated	Terminator, coated version	779 112
KOP-XE	Jumper	774 639
KOP-XE coated	Jumper, coated version	774 640

Connection terminals

Product type	Features	Order No.
Set spring terminals	1 set of spring-loaded terminals	783 700
Set screw terminals	1 set of screw terminals	793 700

Link modules
PNOZ ml1p



Overview

Unit features

Application of the product PNOZ ml1p:

Link module to safely connect two configurable small control systems PNOZmulti.

The product has the following features:

- Can be configured in the PNOZmulti Configurator
- Point-to-point connection via 4-core shielded and twisted-pair cable
- 32 virtual inputs and 32 virtual outputs
- Status indicators
- Plug-in connection terminals (either cage clamp terminal or screw terminal)
- Max. 4 PNOZ ml1p units can be connected to the base unit
- LEDs for
  - Operating state
  - Error
  - Connection status
- Coated version:

  Increased environmental requirements (see Technical details [📖 266])

Link modules
PNOZ ml1p

Front view

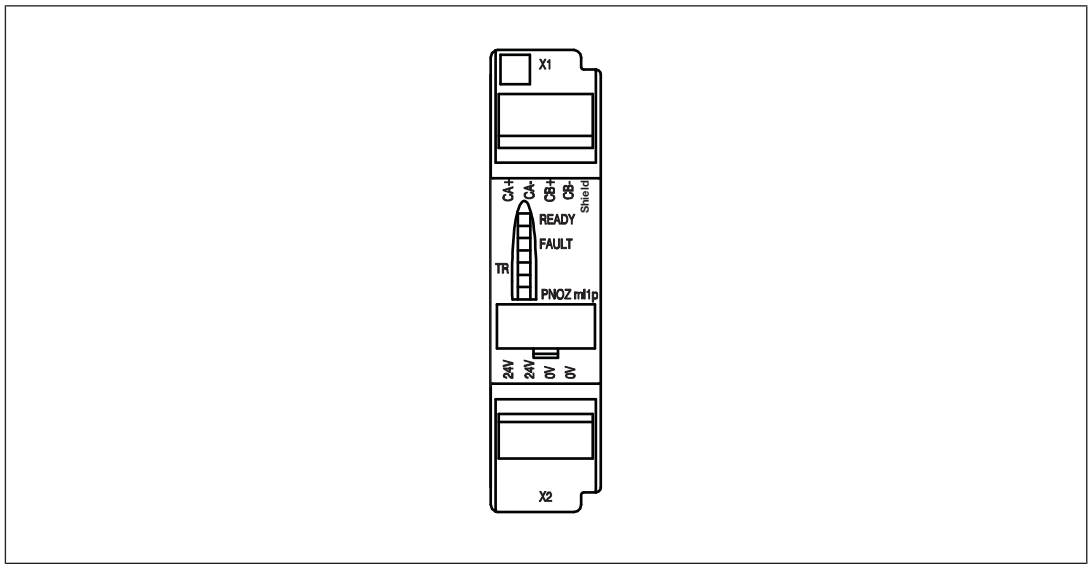

Key:

- 0 V, 24 V:
  Supply connections
- CA+, CA-, CB+, CB-:
  Connections for 2 expansion modules PNOZ ml1p
- Shield:
  Connection for the cable shield

Function Description

Functions

The PNOZ ml1p link module is used to safely transfer the input information from 32 virtual inputs and 32 virtual outputs between two PNOZmulti systems. One link module is assigned to each base unit. Data is exchanged cyclically.

The function of the inputs and outputs on the control system depends on the safety circuit created using the PNOZmulti Configurator. A chip card is used to download the safety circuit to the base unit. The base unit has 2 microcontrollers that monitor each other. They evaluate the input circuits on the base unit and expansion modules and switch the outputs on the base unit and expansion modules accordingly.

The LEDs on the base unit and expansion modules indicate the status of the configurable control system PNOZmulti.

The online help on the PNOZmulti Configurator contains descriptions of the operating modes and all the functions of the control system, plus connection examples.

Link modules
PNOZ ml1p

Data exchange:

- Data is exchanged cyclically.
- After the end of a PNOZmulti cycle, each base unit sends its output data to its link module. This output data is immediately sent to the link module on the other base unit.
- At the same time, the base unit reads the input data from the link module.

Connection of multiple base units:

Any number of base units can be connected via PNOZ ml1p link modules. Two PNOZ ml1p are required for the connection between two base units. However, only a maximum of 4 link modules may be connected to any one base unit.

Data transmission time:

The data transmission time t_{BUS} is the time between the virtual output at base unit 1 being set and the virtual input at base unit 2 becoming available (see Technical details [266]).

The maximum reaction time for series connection of n base units

This is the time between the activation of a safety function at the input on one base unit and the switching of an output on the connected base unit.

- The maximum reaction time t_{SUM} includes the following times:

  t_{ON}: Input delay = 4 ms

  t_{COND}: Switch-off delay of semiconductor output = 30 ms

  t_{REL}: Switch-off delay of relay output = 50 ms

  t_{BUS}: Data transmission time between two base units = 35 ms

  n: Number of connections between base units

The maximum reaction time t_{SUM} for series connection of n base units

- On semiconductor outputs:

  $tS_{UM} = t_{ON} + (n * t_{BUS}) + t_{COND}$
- On relay outputs:

  $t_{SUM} = t_{ON} + (n * t_{BUS}) + t_{REL}$
- Input delay and switch-off delay are only included once in the reaction time. The data transmission time between the link modules is multiplied by the number of connections.
- Please refer to the Connection examples [265].

Link modules
PNOZ ml1p

Virtual inputs and outputs:

Inputs and outputs for both PNOZmulti systems are assigned in the PNOZmulti Configurator. Inputs and outputs with the same number are assigned to each other, e.g. output o5 on one PNOZmulti system to input i5 on the other PNOZmulti system.

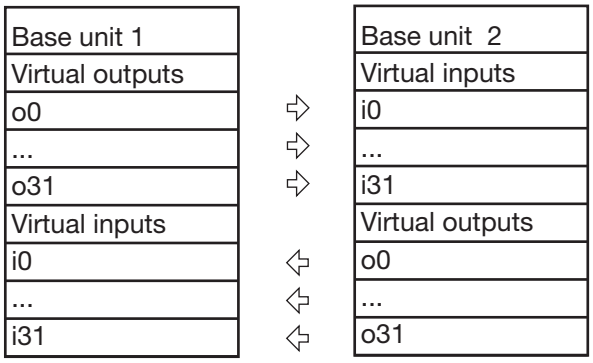

System reaction time

Calculation of the maximum reaction time between an input switching off and a linked output in the system switching off is described in the document "PNOZmulti System Expansion [30]".

Block diagram

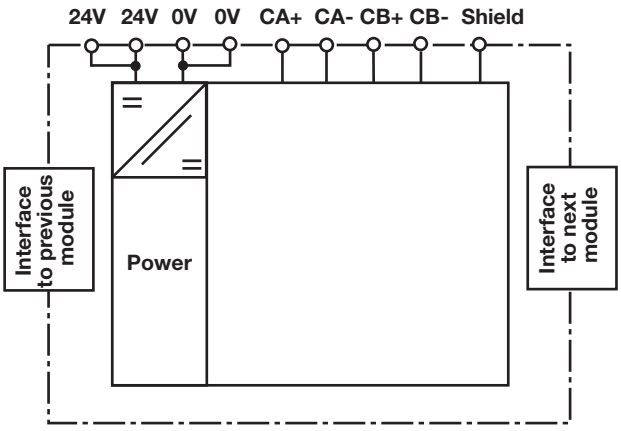

Link modules
PNOZ ml1p

Installation

Dimensions in mm

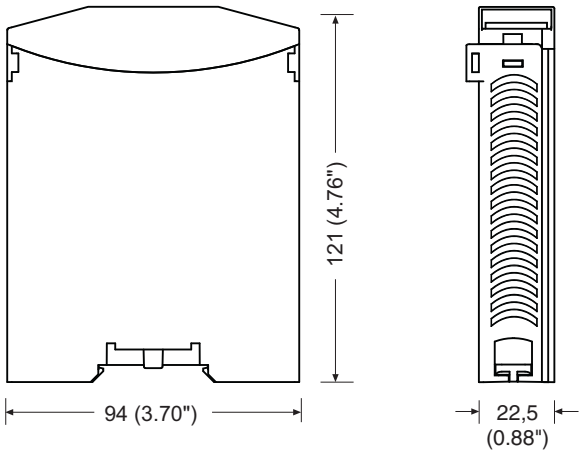

Commissioning

General wiring guidelines

The wiring is defined in the circuit diagram of the PNOZmulti Configurator.

Please note:

- Information given in the Technical details [📖 266] must be followed.
- The position of the expansion module is specified in the Hardware configuration of the PNOZmulti Configurator.
- Use copper wiring with a temperature stability of 75 °C.
- Two connection terminals are available for each of the supply connections 24 V and 0 V (semiconductor outputs), plus A1 and A2 (power supply). This means that the supply voltage can be looped through several connections. When the supply voltage is looped, the current at each terminal may not exceed 3 A.
- The max. cable length between two link modules may be max. 1000 m.
  Please note:
  When connecting to a PNOZ ml1p with a version < 2.0, the cable length may be max. 100 m. The reduced cable length must be configured in the PNOZmulti Configurator.
- Connect the inputs and outputs from two PNOZ ml1p with a 4-core shielded cable. The cables must be twisted in pairs.
- Note the crossover cabling, e.g. CA+ with CB+.
- The cables must be classified into a minimum of Category 5 in accordance with ISO/IEC 11801.

Link modules
PNOZ ml1p

- You can use ready-made cable from Pilz to connect two PNOZ ml1p. The plug-in connection terminals are either designed as cage clamp terminals or screw terminals (see order reference).
- Cable shield:
  - Please note: Always connect the shield to both link modules (**Shield** terminal).
  - The shield of the connection cable may only be connected to the **Shield** terminals on both PNOZ ml1p. Do **not** connect the shield to the equipotential bonding bar, for example.

Connection

Supply voltage	AC	DC
	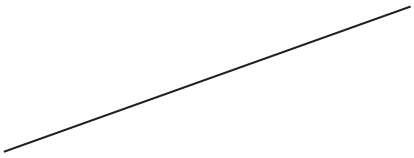	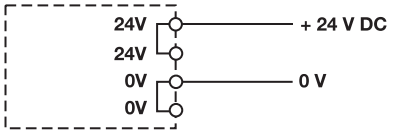

Connection of two PNOZmulti base units via the module PNOZ ml1p

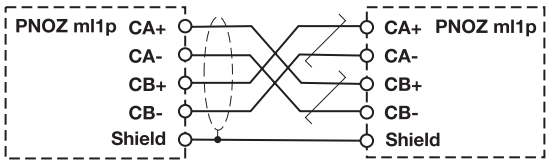

Link modules
PNOZ ml1p

Connection examples

Example: Series connection of 3 base units

Reaction time t_{SUM} between base unit Base 1 and Base 2:
Input delay t_{ON} at I3 and I6 + data transmission time1 * t_{BUS} through link module + switch-off delay t_{COND} of the semiconductor output at O0
$t_{SUM} = t_{ON} + (n * t_{BUS}) + t_{COND}$
t_{SUM} = 4 ms + (1 * 35 ms) + 30 ms = 69 ms
Reaction time t_{SUM} between base unit Base 1 and Base 3:
Input delay t_{ON} at I3 und I6 + data transmission time 2 * t_{BUS} through link modules + switch-off delay t_{COND} of the semiconductor output at O1
$t_{SUM} = t_{ON} + (n * t_{BUS}) + t_{COND}$
t_{SUM} = 4 ms + (2 * 35 ms) + 30 ms = 104 ms

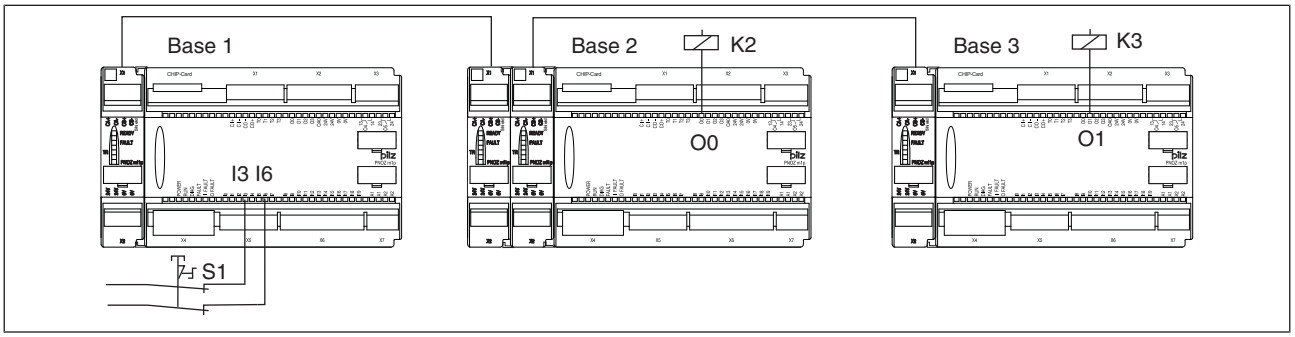

Link modules
PNOZ ml1p

Example: Connection of 5 base units

The reaction times are calculated in the same way as application example 1. After pressing S1 on Base 1, the semiconductor outputs switch after the following reaction times t_{SUM}:
O0 on Base 1: 69 ms
O1 on Base 3: 104 ms
O0 on Base 4: 139 ms
O0 on Base 5: 104 ms

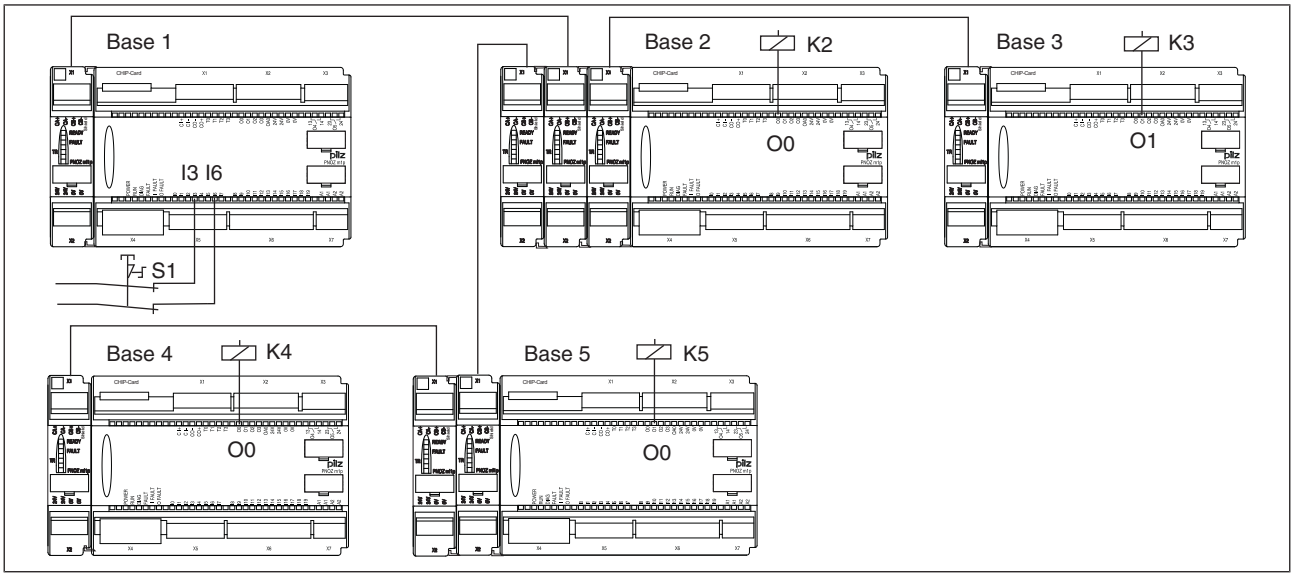

Technical details

General	773540	773545
Certifications	**BG, CCC, CE, EAC (Eurasian), KCC, TÜV, cULus Listed**	**BG, CCC, CE, EAC (Eurasian), TÜV, cULus Listed**
Electrical data	**773540**	**773545**
Supply voltage		
for	**Module supply**	**Module supply**
Voltage	**24 V**	**24 V**
Kind	**DC**	**DC**
Voltage tolerance	**-15 %/+20 %**	**-15 %/+20 %**
Output of external power supply (DC)	**5 W**	**5 W**
Residual ripple DC	**5 %**	**5 %**
Status indicator	**LED**	**LED**
Virtual inputs	**773540**	**773545**
Number of virtual inputs	**32**	**32**
Virtual outputs	**773540**	**773545**
Number of virtual outputs	**32**	**32**

Link modules
PNOZ ml1p

Times	773540	773545
Switch-on delay	**5 s**	**5 s**
Supply interruption before de-energisation	**20 ms**	**20 ms**
Max. data transmission time	**35 ms**	**35 ms**
Environmental data	**773540**	**773545**
Ambient temperature		
In accordance with the standard	**EN 60068-2-14**	**EN 60068-2-14**
Temperature range	**0 - 60 °C**	**-25 - 60 °C**
Storage temperature		
In accordance with the standard	**EN 60068-2-1/-2**	**EN 60068-2-1/-2**
Temperature range	**-25 - 70 °C**	**-25 - 70 °C**
Climatic suitability		
In accordance with the standard	**EN 60068-2-30, EN 60068-2-78**	**EN 60068-2-30, EN 60068-2-78**
Humidity	**93 % r. h. at 40 °C**	**93 % r. h. at 40 °C**
Condensation during operation	**Not permitted**	**Short-term**
EMC	**EN 61131-2**	**EN 61131-2**
Vibration		
In accordance with the standard	**EN 60068-2-6**	**EN 60068-2-6**
Frequency	**10 - 150 Hz**	**5 - 500 Hz**
Acceleration	**1g**	**1g**
Broadband noise		
In accordance with the standard	–	**EN 60068-2-64**
Frequency	–	**5 - 500 Hz**
Acceleration	–	**1,9grms**
Shock stress		
In accordance with the standard	**EN 60068-2-27**	**EN 60068-2-27**
Acceleration	**15g**	**15g**
Duration	**11 ms**	**11 ms**
Max. operating height above sea level	**2000 m**	**2000 m**
Airgap creepage		
In accordance with the standard	**EN 61131-2**	**EN 61131-2**
Overvoltage category	**III**	**III**
Pollution degree	**2**	**2**
Rated insulation voltage	**30 V**	**30 V**
Protection type		
In accordance with the standard	**EN 60529**	**EN 60529**
Mounting area (e.g. control cabinet)	**IP54**	**IP54**
Housing	**IP20**	**IP20**
Terminals	**IP20**	**IP20**

Link modules
PNOZ ml1p

Mechanical data	773540	773545
Mounting position	**horizontally on mounting rail**	**horizontally on mounting rail**
DIN rail		
Top hat rail	**35 x 7,5 EN 50022**	**35 x 7,5 EN 50022**
Recess width	**27 mm**	**27 mm**
Max. cable length between two link modules	**1 km**	**1 km**
Material		
Bottom	**PPO UL 94 V0**	**PPO UL 94 V0**
Front	**ABS UL 94 V0**	**ABS UL 94 V0**
Connection type	**Spring-loaded terminal, screw terminal**	**Spring-loaded terminal, screw terminal**
Conductor cross section with screw terminals		
1 core flexible	**0,25 - 1,5 mm², 24 - 16 AWG**	**0,25 - 1,5 mm², 24 - 16 AWG**
2 core with the same cross section, flexible without crimp connectors or with TWIN crimp connectors	**0,25 - 0,75 mm², 24 - 20 AWG**	**0,25 - 0,75 mm², 24 - 20 AWG**
Torque setting with screw terminals	**0,25 Nm**	**0,25 Nm**
Stripping length with screw terminals	**7 mm**	**7 mm**
Conductor cross section with spring-loaded terminals		
1 core flexible without crimp connector	**0,25 - 1,5 mm², 24 - 16 AWG**	**0,25 - 1,5 mm², 24 - 16 AWG**
1 core flexible with crimp connector	**0,25 - 0,75 mm², 24 - 20 AWG**	**0,25 - 0,75 mm², 24 - 20 AWG**
Spring-loaded terminals: Terminal points per connection	**1**	**1**
Stripping length with spring-loaded terminals	**9 mm**	**9 mm**
Dimensions		
Height	**94 mm**	**94 mm**
Width	**22,5 mm**	**22,5 mm**
Depth	**121 mm**	**121 mm**
Weight	**129 g**	**135 g**

Where standards are undated, the 2020-07 latest editions shall apply.

Link modules
PNOZ ml1p

Safety characteristic data

Operating mode	EN ISO 13849-1: 2015 PL	EN ISO 13849-1: 2015 Category	EN 62061 SIL CL	EN 62061 PFH_D [1/h]	IEC 61511 SIL	IEC 61511 PFD	EN ISO 13849-1: 2015 T_M [year]
2-channel	**PL e**	**Cat. 4**	**SIL CL 3**	**8,82E-09**	**SIL 3**	**3,86E-05**	**20**

Explanatory notes for the safety-related characteristic data:

- The SIL CL value in accordance with EN 62061 corresponds to the SIL value in accordance with EN 61508.
- T_M is the maximum mission time in accordance with EN ISO 13849-1. The value also applies as the retest interval in accordance with EN 61508-6 and IEC 61511 and as the proof test interval and mission time in accordance with EN 62061.

All the units used within a safety function must be considered when calculating the safety characteristic data.

Order reference

Product

Product type	Features	Order No.
PNOZ ml1p	Link Module	773 540
PNOZ ml1p coated version	Link module, coated version	773 545

Accessories

Terminator, jumper

Product type	Features	Order No.
PNOZmulti bus terminator	Terminator	779 110
PNOZmulti bus terminator coated	Terminator, coated version	779 112
KOP-XE	Jumper	774 639
KOP-XE coated	Jumper, coated version	774 640

Link modules
PNOZ ml1p

Cable

Product type	Features	Order no.
PNOZ mli1p 5m screw	Cable, 5-pin, shielded, screw terminal, 5 m	773 890
PNOZ mli1p 10m screw	Cable, 5-pin, shielded, screw terminal, 10 m	773 891
PNOZ mli1p 50m screw	Cable, 5-pin, shielded, screw terminal, 50 m	773 892
PNOZ mli1p 5m spring	Cable, 5-pin, shielded, spring-loaded terminal, 5 m	773 893
PNOZ mli1p 10m spring	Cable, 5-pin, shielded, spring-loaded terminal, 10 m	773 894
PNOZ mli1p 50m spring	Cable, 5-pin, shielded, spring-loaded terminal, 50 m	773 895
PNOZ mli1p 1.5m spring	Cable, 5-pin, shielded, spring-loaded terminal, 1.5 m	773 896
PNOZ mli1p 1.5m screw	Cable, 5-pin, shielded, screw terminal, 1.5 m	773 897
SafetyNET p Cable	SafetyNET p cable, 1 - 500 m	380 000

Connection terminals

Product type	Features	Order No.
Set spring terminals	1 set of spring-loaded terminals	783 400
Set screw terminals	1 set of screw terminals	793 400

Link modules
PNOZ ml2p



Overview

Unit features

Application of the product PNOZ ml2p:

Link module to safely connect decentralised input/output modules to a configurable control system PNOZmulti

The product has the following features:

- Can be configured in the PNOZmulti Configurator
- Max. 4 PNOZ ml2p can be connected to the base unit
- Max. 4 decentralised modules PDP67 F 8DI ION can be connected to the link module PNOZ ml2p
- Plug-in connection terminals (either cage clamp terminal or screw terminal)
- LEDs for
  - Operating status
  - Fault
  - Connection status
- Please refer to the document "PNOZmulti System Expansion" for the PNOZmulti base units that can be connected.

Link modules
PNOZ ml2p

Front view

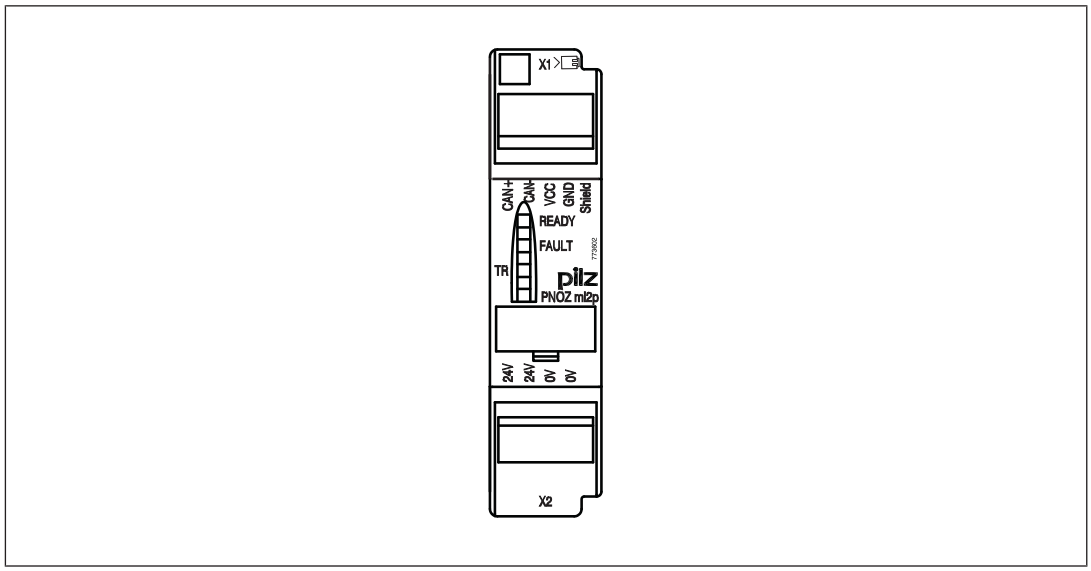

Key:

- 0 V, 24 V:
  Supply connections
- CAN+, CAN-, VCC, GND:
  Connection for decentralised modules
- Shield:
  Connection for the cable shield

Function description

Operation

The link module PNOZ ml2p is used to safely transfer the input information from decentralised modules to the safety system PNOZmulti.

The function of the inputs and outputs on the control system depends on the safety circuit created using the PNOZmulti Configurator. A chip card is used to download the safety circuit to the base unit. The base unit has 2 microcontrollers that monitor each other. They evaluate the input circuits on the base unit and expansion modules and switch the outputs on the base unit and expansion modules accordingly.

The LEDs on the base unit and expansion modules indicate the status of the configurable control system PNOZmulti.

The online help on the PNOZmulti Configurator contains descriptions of the operating modes and all the functions of the control system, plus connection examples.

Link modules
PNOZ ml2p

Data exchange:

- Communication with the decentralised modules is via a safe data link.
- The link module PNOZ ml2p reads the input information from the decentralised modules as part of each cycle and then forwards it to the base unit.
- At the end of a PNOZmulti cycle, the base unit sends its output data to its link module. This output data is immediately sent to the decentralised modules.

Linking several decentralised modules:

- A maximum of 4 link modules can be connected to a PNOZmulti base unit.
- A maximum of 4 decentralised modules can be connected to a link module PNOZ ml2p.
- If a decentralised module receives data intended for a different decentralised module that is connected, the data is forwarded without being processed.

Block diagram

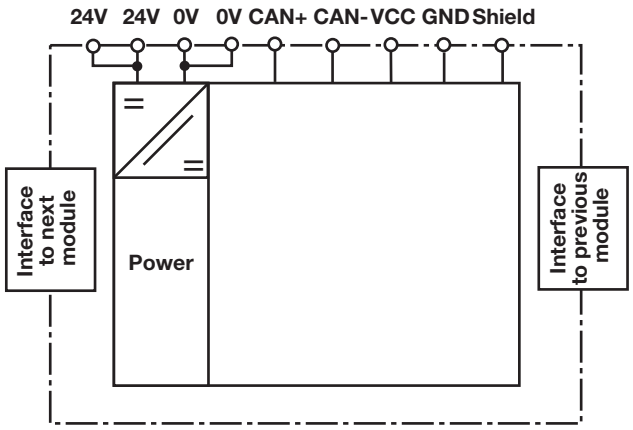

Link modules
PNOZ ml2p

Installation

Dimensions in mm

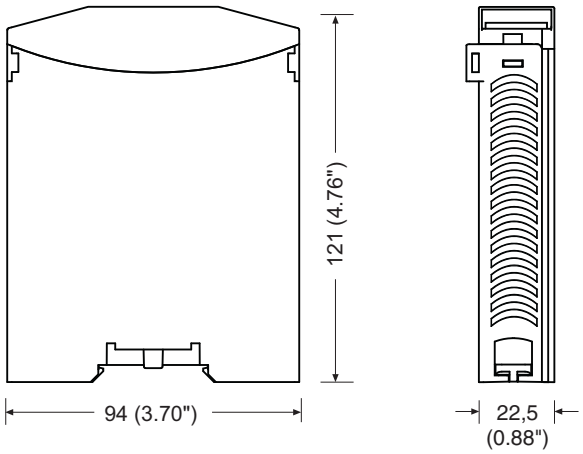

Commissioning

General wiring guidelines

The wiring is defined in the circuit diagram of the PNOZmulti Configurator.

Please note:

- Information given in the Technical details [📖 279] must be followed.
- The position of the expansion module is specified in the Hardware configuration of the PNOZmulti Configurator.
- Use copper wiring with a temperature stability of 75 °C.
- Two connection terminals are available for each of the supply connections 24 V and 0 V (semiconductor outputs), plus A1 and A2 (power supply). This means that the supply voltage can be looped through several connections. When the supply voltage is looped, the current at each terminal may not exceed 3 A.
- Please refer to the technical details for information on the maximum cable length. Please also read the section entitled Voltage drop [📖 277].
- With a cable length of 30 m or above, or in environments with strong interfaces, shielded cables must be used.
- If there are signal interferences/EMC problems that are to be expected or present, we recommend that you use a shielded cable from the beginning. In addition, you can place the braided shield of the cables directly next to the device via a shielded terminal to the functional earth (mounting rail).

Link modules
PNOZ ml2p

- Pilz pre-assembled cables can be used to connect the decentralised modules (see Order references [📖 281]).
- The plug-in connection terminals are either designed as cage clamp terminals or screw terminals (see Order references [📖 281]).

Insulation voltage test

The product PNOZ ml2p is connected to functional earth⏚ via protection elements on the supply voltage. Insulation voltage tests are only possible with voltages up to ca. 42 V.

Preparing for operation

Download modified project to the PNOZmulti safety system

As soon as an additional expansion module has been connected to the system, the project must be amended in the PNOZmulti Configurator and downloaded back into the base unit. Proceed as described in the operating manual for the base unit.

Connection

Supply voltage	AC	DC
	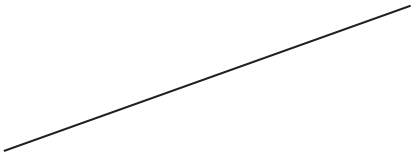	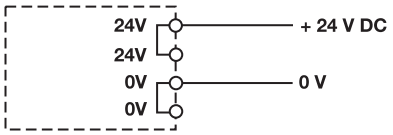

Supply voltage

Connection to a decentralised input module PDP67

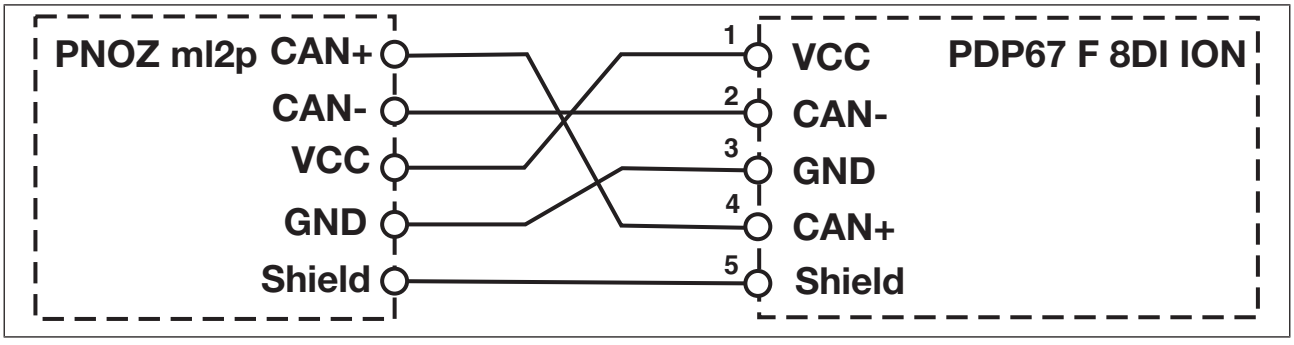

Link modules
PNOZ ml2p

Connection when using the PSS SB BUSCABLE LC in conjunction with a Pilz self-assembly "PSS67 M12 connector" (see order reference in the Technical Catalogue)

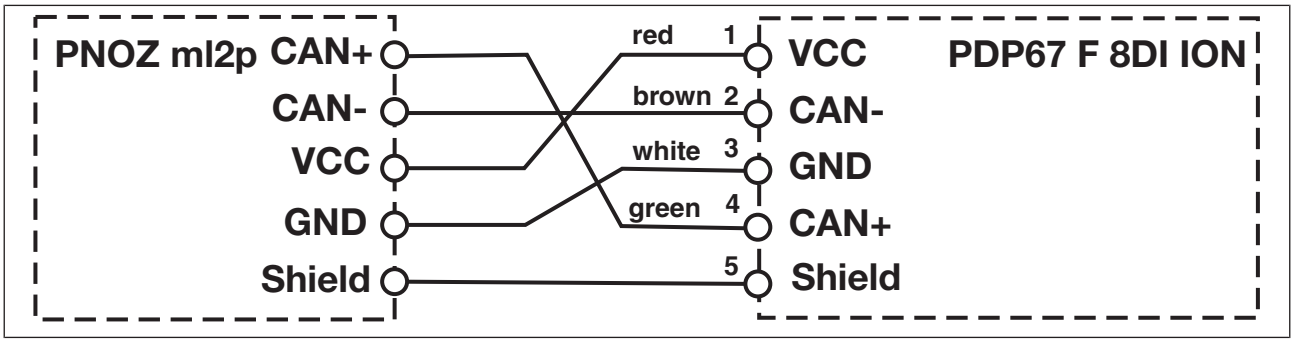

Link modules
PNOZ ml2p

Series connection of 4 decentralised modules

You can connect up to 4 decentralised modules in series to a PNOZmulti link module.

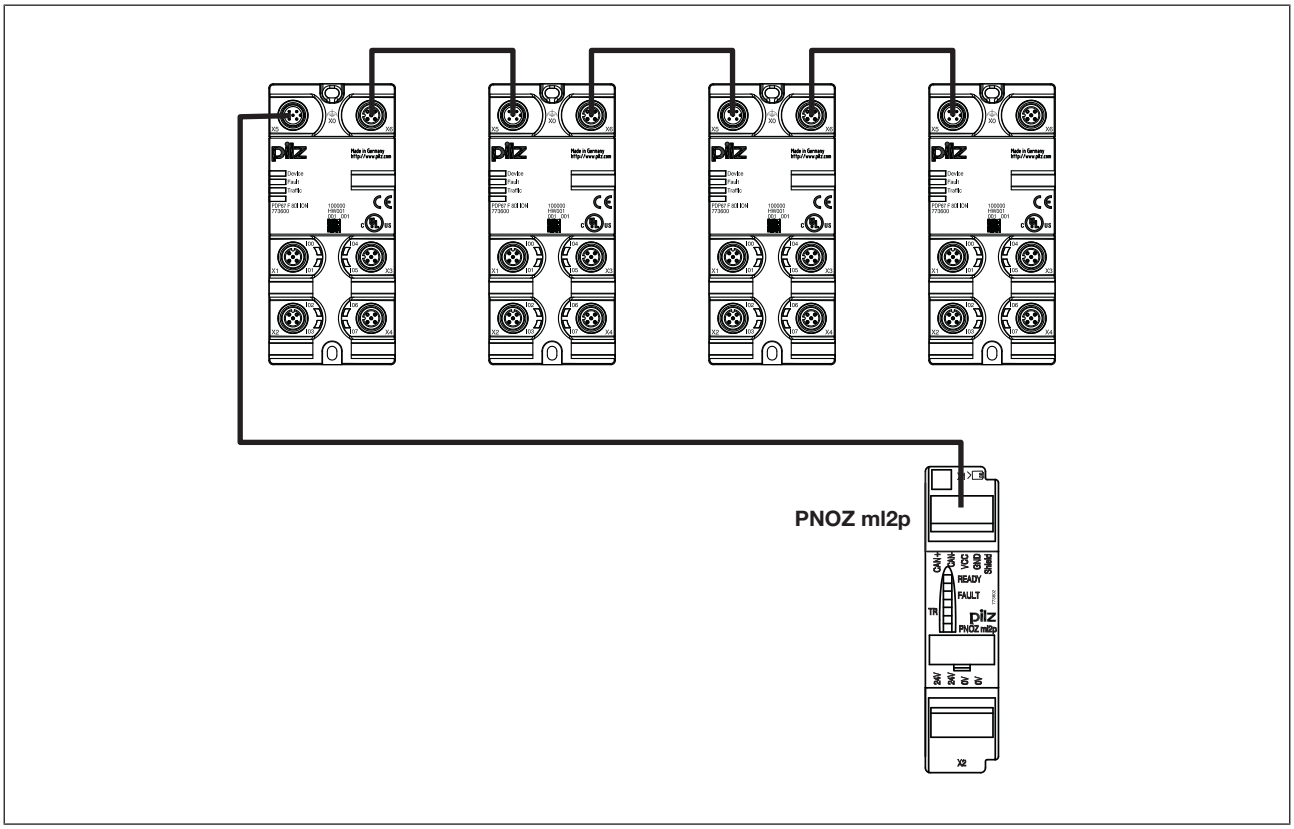

Voltage drop

The max. cable length depends on the voltage drop in the supply voltage cables. The level of voltage drop is determined by the:

- Cable resistance on the supply voltage cables
- Operating current of the modules
- Load on the modules

To increase the max. cable length, the input voltage can be permanently increased by the voltage tolerance (see Technical Details).

Guidelines for various cable types

Cable type	Voltage drop per 10 m and per 100 mA
PSS SB BUSCABLE LC	0.1 V
Sensor cable 0.25 mm^2	0.15 V
Sensor cable 0.34 mm^2	0.11 V

Link modules
PNOZ ml2p

Cable type	Voltage drop per 10 m and per 100 mA
Sensor cable 0.5 mm²	0.07 V

Calculation example

- The PSS SB BUSCABLE LC is used in accordance with the pin assignment in section 6.2.2.
  Voltage drop per 10 m and per 100 mA: 0.1 V

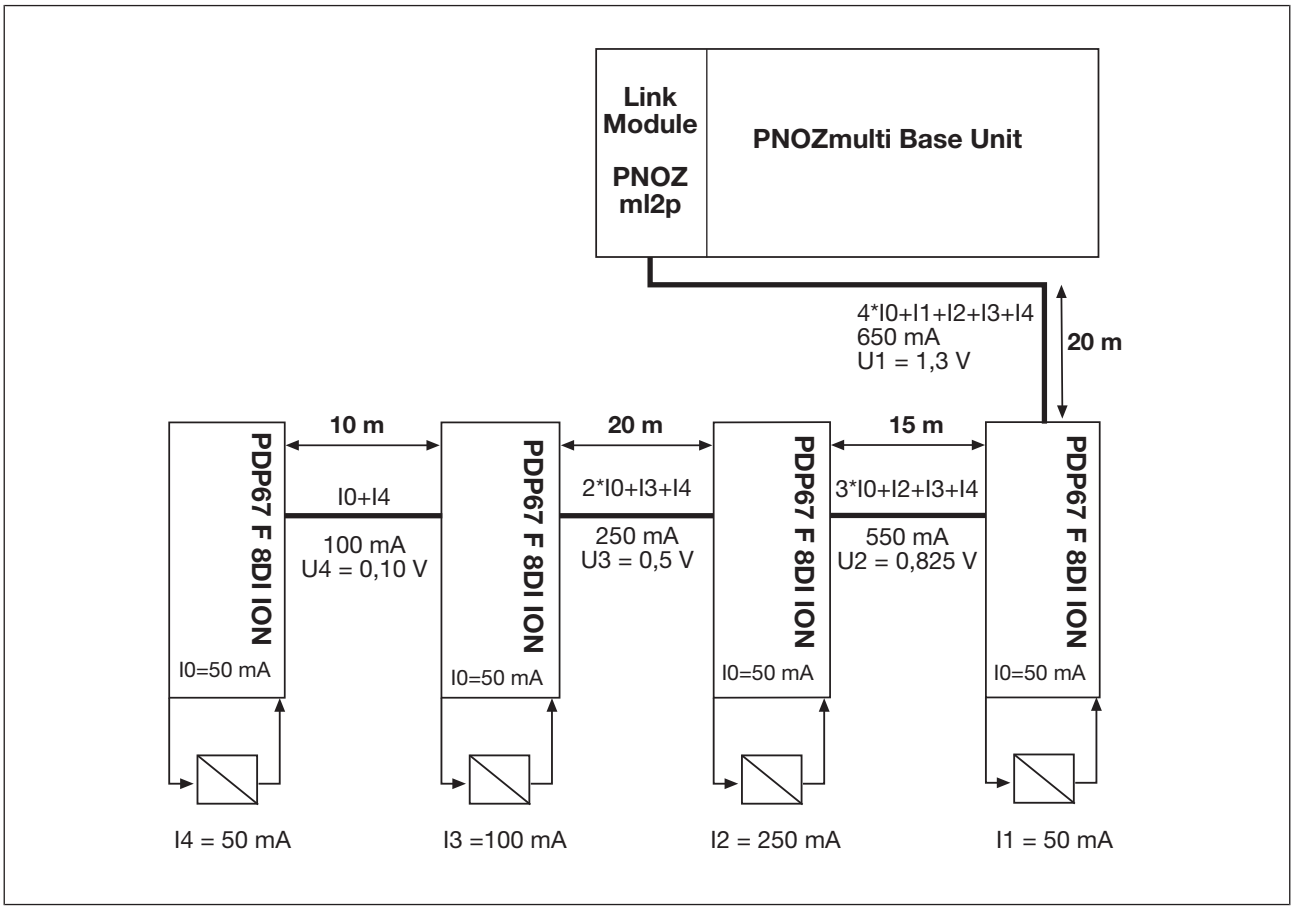

Key:

- I0: Module's consumption.
- I1 ... I5: Load current taken from the module
- U1 … U4: Voltage drop on the respective connection path

Total voltage drop from the link module PNOZ ml2p to the final PDP67 F 8DI ION:
$U_{total} = U_1 + U_2 + U_3 + U_4$
U_{total} = 1.3 V + 0.825 V + 0.5 V + 0.10 V = 2.725 V

Link modules
PNOZ ml2p

Technical details

General	
Certifications	**BG, CCC, CE, EAC (Eurasian), KCC, TÜV, cULus Listed**
Electrical data	
Supply voltage	
for	**Module supply**
Voltage	**24 V**
Kind	**DC**
Voltage tolerance	**-15 %/+20 %**
Output of external power supply (DC)	**101 W**
Residual ripple DC	**5 %**
Status indicator	**LED**
Inputs	
Maximum input delay	**15 ms**
Semiconductor outputs	
Switch-off delay	**35 ms**
Test pulse outputs	
Maximum output current, decentralised module supply	**4 A**
Short circuit protection of decentralised module supply	**yes**
Times	
Switch-on delay	**5 s**
Supply interruption before de-energisation	**20 ms**
Environmental data	
Ambient temperature	
In accordance with the standard	**EN 60068-2-14**
Temperature range	**0 - 60 °C**
Storage temperature	
In accordance with the standard	**EN 60068-2-1/-2**
Temperature range	**-25 - 70 °C**
Climatic suitability	
In accordance with the standard	**EN 60068-2-30, EN 60068-2-78**
Humidity	**93 % r. h. at 40 °C**
Condensation during operation	**Not permitted**
EMC	**EN 61131-2**

Link modules
PNOZ ml2p

Environmental data	
Vibration	
In accordance with the standard	**EN 60068-2-6**
Frequency	**10 - 150 Hz**
Acceleration	**1g**
Shock stress	
In accordance with the standard	**EN 60068-2-27**
Acceleration	**15g**
Duration	**11 ms**
Max. operating height above sea level	**2000 m**
Airgap creepage	
In accordance with the standard	**EN 61131-2**
Overvoltage category	**III**
Pollution degree	**2**
Rated insulation voltage	**30 V**
Protection type	
In accordance with the standard	**EN 60529**
Mounting area (e.g. control cabinet)	**IP54**
Housing	**IP20**
Terminals	**IP20**
Mechanical data	
Mounting position	**horizontally on mounting rail**
DIN rail	
Top hat rail	**35 x 7,5 EN 50022**
Recess width	**27 mm**
Max. cable length unshielded	**30 m**
Max. cable length shielded	**100 m**
Material	
Bottom	**PPO UL 94 V0**
Front	**ABS UL 94 V0**
Connection type	**Spring-loaded terminal, screw terminal**
Conductor cross section with screw terminals	
1 core flexible	**0,25 - 1,5 mm², 24 - 16 AWG**
2 core with the same cross section, flexible without crimp connectors or with TWIN crimp connectors	**0,25 - 0,75 mm², 24 - 20 AWG**
Torque setting with screw terminals	**0,25 Nm**
Stripping length with screw terminals	**7 mm**
Conductor cross section with spring-loaded terminals	
1 core flexible without crimp connector	**0,25 - 1,5 mm², 24 - 16 AWG**
1 core flexible with crimp connector	**0,25 - 0,75 mm², 24 - 20 AWG**
Spring-loaded terminals: Terminal points per connection	**1**

Link modules
PNOZ ml2p

Mechanical data	
Stripping length with spring-loaded terminals	**9 mm**
Dimensions	
Height	**94 mm**
Width	**22,5 mm**
Depth	**121 mm**
Weight	**133 g**

Where standards are undated, the 2020-07 latest editions shall apply.

Safety characteristic data

Operating mode	EN ISO 13849-1: 2015 PL	EN ISO 13849-1: 2015 Category	EN 62061 SIL CL	EN 62061 PFH_D [1/h]	IEC 61511 SIL	IEC 61511 PFD	EN ISO 13849-1: 2015 T_M [year]
–	**PL e**	**Cat. 4**	**SIL CL 3**	**5,35E-09**	**SIL 3**	**3,30E-05**	**20**

Explanatory notes for the safety-related characteristic data:

- The SIL CL value in accordance with EN 62061 corresponds to the SIL value in accordance with EN 61508.
- T_M is the maximum mission time in accordance with EN ISO 13849-1. The value also applies as the retest interval in accordance with EN 61508-6 and IEC 61511 and as the proof test interval and mission time in accordance with EN 62061.

All the units used within a safety function must be considered when calculating the safety characteristic data.

Order reference

Products

Product type	Features	Order No.
PNOZ ml2p	Link Module	773 602

Accessories

Terminator, jumper

Product type	Features	Order no.
PNOZmulti bus terminator	Terminator	779 110
KOP-XE	Jumper	774 639

Link modules
PNOZ ml2p

Adapter

Product type	Features	Order No.
PSEN ma adapter	Adapter for connection to safety switch PSENmag	380 300
PSEN cs adapter	Adapter for connection to safety switch PSENcode	380 301
PSEN sl adapter	Adapter for connection to safety switch PSENslock	380 325

Cable

Product type	Features	Order No.
PSS SB BUSCABLE LC	Cable, shielded, 1 - 100 m	311074
PSS67 I/O Cable	Cable, 1 - 30 m	380 320
PSS67 Cable M8sf M12sm	Cable, straight M12 connector, straight M8 socket, 4-pin, 3 m	380 200
PSS67 Cable M8sf M12sm	Cable, straight M12 connector, straight M8 socket, 4-pin, 5 m	380 201
PSS67 Cable M8sf M12sm	Cable, straight M12 connector, straight M8 socket, 4-pin, 10 m	380 202
PSS67 Cable M8sf M12sm	Cable, straight M12 connector, straight M8 socket, 4-pin, 30 m	380 203
PSS67 Cable M8af M12sm	Cable, straight M12 connector, angled M8 socket, 4-pin, 3m	380 204
PSS67 Cable M8af M12sm	Cable, straight M12 connector, angled M8 socket, 4-pin, 5 m	380 205
PSS67 Cable M8af M12sm	Cable, straight M12 connector, angled M8 socket, 4-pin, 10 m	380 206
PSS67 Cable M8af M12sm	Cable, straight M12 connector, angled M8 socket, 4-pin, 30 m	380 207
PSS67 Cable M12sf M12sm	Cable, straight M12 connector, straight M12 socket, 5-pin, 3m	380 208
PSS67 Cable M12sf M12sm	Cable, straight M12 connector, straight M12 socket, 5-pin, 5 m	380 209
PSS67 Cable M12sf M12sm	Cable, straight M12 connector, straight M12 socket, 5-pin, 10 m	380 210
PSS67 Cable M12sf M12sm	Cable, straight M12 connector, straight M12 socket, 5-pin, 20 m	380 220
PSS67 Cable M12sf M12sm	Cable, straight M12 connector, straight M12 socket, 5-pin, 30 m	380 211
PSS67 Cable M12af M12am	Cable, angled M12 connector, angled M12 socket, 5-pin, 3m	380 212
PSS67 Cable M12af M12am	Cable, angled M12 connector, angled M12 socket, 5-pin, 5 m	380 213

Link modules
PNOZ ml2p

Product type	Features	Order No.
PSS67 Cable M12af M12am	Cable, angled M12 connector, angled M12 socket, 5-pin, 10 m	380 214
PSS67 Cable M12af M12am	Cable, angled M12 connector, angled M12 socket, 5-pin, 30 m	380 215
PSEN op cable axial M12 5-pole 3m	Cable, straight, M12, 5-pin, open-ended socket, 3 m	630310
PSEN op cable axial M12 5-pole 5m	Cable, straight, M12, 5-pin, open-ended socket, 5 m	630311
PSEN op cable axial M12 5-pole 10m	Cable, straight, M12, 5-pin, open-ended socket, 10 m	630312
PSEN op cable axial M12 5-pole 20m	Cable, straight, M12, 5-pin, open-ended socket, 20 m	630298
PSEN op cable axial M12 5-pole 30m	Cable, straight, M12, 5-pin, open-ended socket, 30 m	630297

Connection terminals

Product type	Features	Order No.
Set spring terminals	1 set of spring-loaded terminals	783 400
Set screw terminals	1 set of screw terminals	793 400

Connector

Product type	Features	Order No.
PSS67 M12 connector	Connector, M12, straight, 5-pin, A-coded	380 308
PSS67 M12 connector	Socket, M12, straight, 5-pin, A-coded	380 309
PSS67 M12 connector	Connector, M12, angled, 5-pin, A-coded	380 310
PSS67 M12 connector	Socket, M12, angled, 5-pin, A-coded	380 311
PSS67 M8 connector	Connector, M8, straight, 4-pin	380 316
PSS67 M8 connector	Socket, M8, straight, 4-pin	380 317
PSS67 M8 connector	Connector, M8, angled, 4-pin	380 318
PSS67 M8 connector	Socket, M8, angled, 4-pin	380 319

Speed monitors
PNOZ ms1p



Overview

Unit features

Application of the product PNOZ ms1p:

Speed monitor for connection to a base unit from the configurable control system PNOZmulti

The product has the following features:

- Monitoring of 2 independent axes
- Connection per axis
  - 1 incremental encoder
    or
  - 2 proximity switches
    or
  - 1 incremental encoder and 1 proximity switch
- Measured variables:
  - Standstill
  - Speed (8 values can be set)
  - Direction of rotation
- Axis types, input device types and reset mode can be selected in the PNOZmulti Configurator
- Status indicators for
  - Supply voltage
  - Incremental encoder
  - Proximity switch
  - Axis status, standstill and excess speed
  - Faults on the system
- Proximity switch connection technology: Plug-in connection terminals (either cage clamp terminal or screw terminal)

Speed monitors
PNOZ ms1p

- Connection technology incremental encoder:
  Female RJ45 connector
- Galvanic isolation between the connections X1, X12 and X22
- Max. 4 speed monitors can be connected to the base unit

Front view

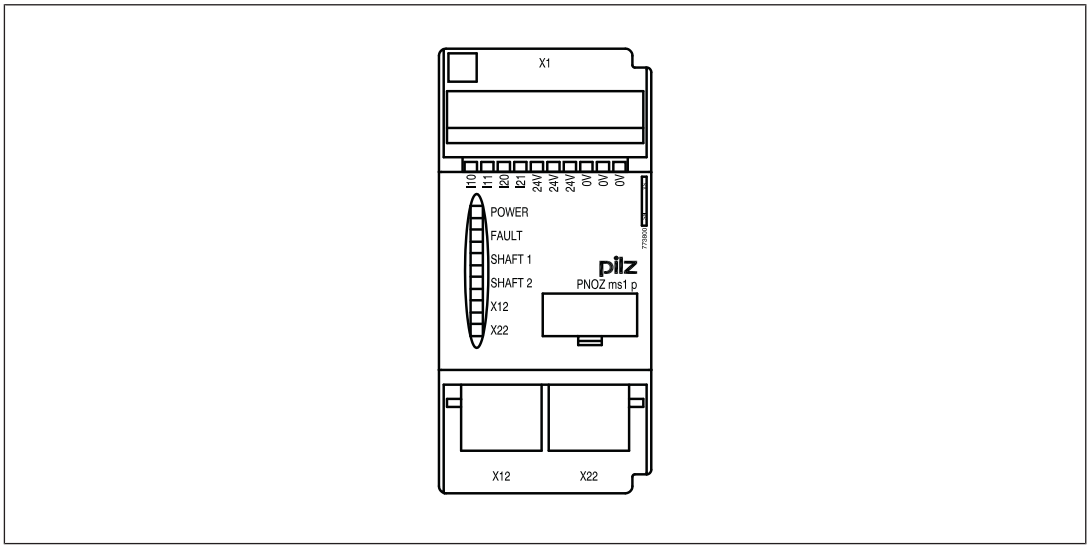

Key:

- X1:
  - I10, I11:
    connection terminals for proximity switch at axis 1
  - I20, I21:
    connection terminals for proximity switch at axis 2
  - 0 V, 24 V:
    supply connections
- X12:
  - female connector for the connection of an incremental encoder at axis 1
- X22:
  - female connector for the connection of an incremental encoder at axis 2
- LEDs:
  - POWER
  - FAULT
  - SHAFT 1
  - SHAFT 2
  - X12

– X22

Function description

Operation

The speed monitor can independently monitor two axes for standstill, speed and direction of rotation. The speed monitor signals the status of the monitored values to the base unit. Depending on the safety circuit loaded, the values can be transferred from the base unit, e.g. to a relay output on the safety system. Incremental encoders and/or proximity detectors can be used to record the values.

The configuration of the speed monitor is described in detail in the PNOZmulti Configurator's online help.

Block diagram

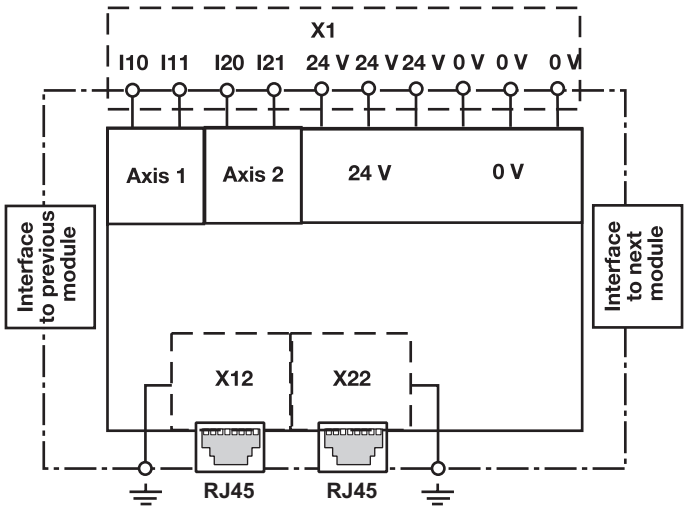

Input device types

Proximity switch

Requirements of the proximity switches

- Only "pnp" type proximity switches may be used (N/O contact, switching to positive).
- The proximity switches require a 24 VDC supply.
- The proximity switches must be fitted so that at least one is always activated (carries a high signal).
- The proximity switches must be fitted so that the recorded signals overlap.

- When monitoring with proximity switches we recommend you use proximity switches with hysteresis in order to prevent bounce and therefore incorrect measurements.

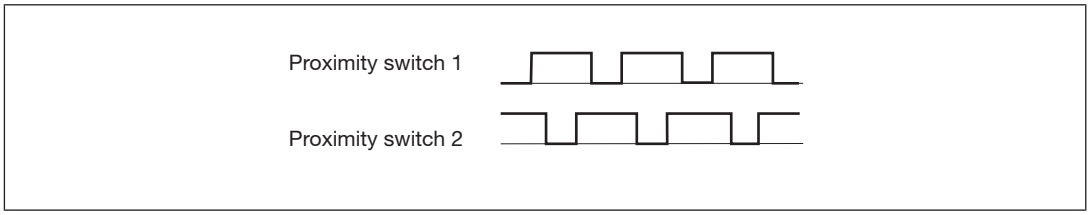

Fig.: Example proximity switch signal behaviour

- Please note the values stated in the technical details

Incremental encoders

Requirements of the incremental encoders

- Only incremental encoders with a differential output of the following type are permitted
  - Sin/Cos
  - TTL (RS422)
- Please note the values stated in the technical details

Adapter for incremental encoders

The adapter records the data between the encoder and drive and makes it available to the PNOZ ms1p via the RJ45 socket.

Pilz supplies complete adapters as well as ready-made cable with RJ45 connector, which can be used when making your own adapter. The range of products in this area is constantly being expanded. Please contact us about the range of adapters that is currently available.

Incremental encoder and proximity switch on one axis

In order to increase the availability, a proximity switch and an incremental encoder can be configured on one axis for the speed monitor. The speed monitor then monitors 3 signals on an axis: Track A and track B of the incremental encoder and the proximity switch

Standstill monitoring

Standstill is detected when at least two of these signals fall below the standstill frequency.

Monitoring for broken shearpins

If the Broken shearpin monitoring option is activated, a shearpin break is recognised if

- both signals of the incremental encoder fall below the set standstill frequency (standstill)

  and

- the proximity switch exceeds the set standstill frequency (rotating shaft).

The recognised broken shearpin leads to safe condition (see status B2 in "Signal statuses" table in Chapter 8 of the operating manual). If individual or multiple signals change, the system may leave a safe state (see "Signal statuses" table).

Hazards that can arise through an automatic restart must be excluded from the user program.

Installation

Dimensions

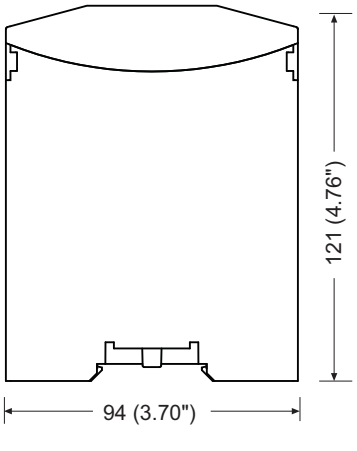

Commissioning

General wiring guidelines

The wiring is defined in the circuit diagram of the PNOZmulti Configurator.

Details of the input type, axis type and reset mode, plus the values for standstill, speed monitoring and direction of rotation are also defined in the PNOZmulti Configurator.

Please note:

- Information given in the Technical details [297] must be followed.
- Use copper wiring with a temperature stability of 75 °C.

Speed monitors
PNOZ ms1p

On each of the 2 axes you can connect as required:

- 1 incremental encoder

  or

- 2 proximity switches

  or

- 1 incremental encoder and 1 proximity switch

	Incremental encoder	Proximity switch
Connection axis 1	X12	-
	-	I10, I11, 0 V
	X12	I10, 0 V
Connection axis 2	X22	-
	-	I20, I21, 0 V
	X22	I20, 0 V

Pin assignment of RJ45 socket

RJ45 socket 8-pin	PIN	Track
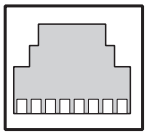 8 1	1	5 V
	2	0 V
	3	n.c.
	4	A
	5	/A
	6	n.c.
	7	B
	8	/B

Connection of proximity switches

Proceed as follows when connecting proximity switches:

- Terminals I10 and I11: connect the proximity switch for axis 1
- Terminals I20 and I21: connect the proximity switch for axis 2.
- If only one axis is to be monitored, either terminals I10 and I11 or terminals I20 and I21 will remain free.
- When connecting incremental encoders and proximity switches on one axis:
  - Terminals I10: connect proximity switch for axis 1 (I11 is not used)
  - Terminals I20: connect proximity switch for axis 2 (I21 is not used)

Speed monitors
PNOZ ms1p

- The proximity switch must always be connected to a 0 V terminal of the speed monitor. The 0 V terminals are connected internally.
- Connect proximity switch to 24 VDC of the power supply or the speed monitor (the 24 V terminals of the speed monitor are connected internally)

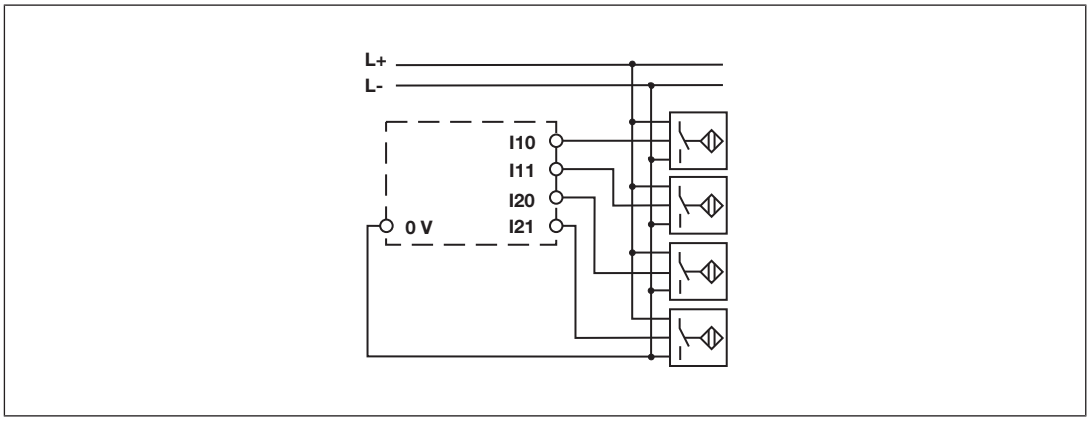

Connection of the incremental encoder

Proceed as follows when connecting the incremental encoder:

- The incremental encoder may be connected via an adapter or directly to the speed monitor.
- The incremental encoder on connector X12 monitors axis 1; the incremental encoder on connector X22 monitors axis 2.
- Use only shielded cables for all connections
- 0 V from the incremental encoder and speed monitor should always be connected.
- Position the terminating resistors of the signal lines as close as possible to the speed monitor input.

Speed monitors
PNOZ ms1p

Connect signals of the incremental encoder to the speed monitor

Input device types: 1 Vss, 5 V-TTL

- Supply incremental encoder and speed monitor with 5 VDC
- Terminate incremental encoder with Z_O = 120 Ohm

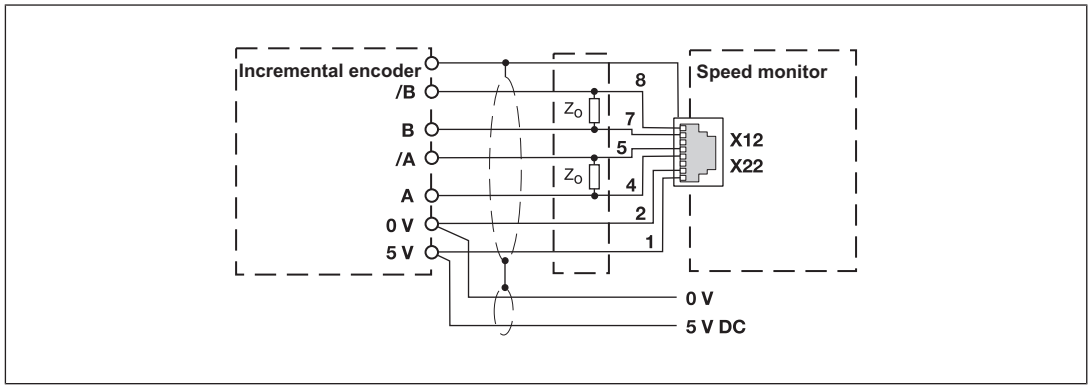

Fig.: Connection to incremental encoder type 1 Vss, 5 V-TTL

Connect incremental encoder to the speed monitor via an adapter

- The adapter is connected between the incremental encoder and the drive. The output on the adapter is connected to the female RJ45 connector on the speed monitor.
- The adapter can also be used without connecting to a drive. The signal lines can then be terminated directly at the adapter with Z_O = 120 Ohm.
- If the signal lines in the drive are already terminated with Z_O = 120 Ohm, the incremental encoder may no longer be terminated.
- The signals relevant for the speed monitor are utilised in parallel by the adapter. The information stated under Connect signals of the incremental encoder to the speed monitor [📖 291] and in the adapter operating manual must be observed when connecting the supply voltage.

Speed monitors
PNOZ ms1p

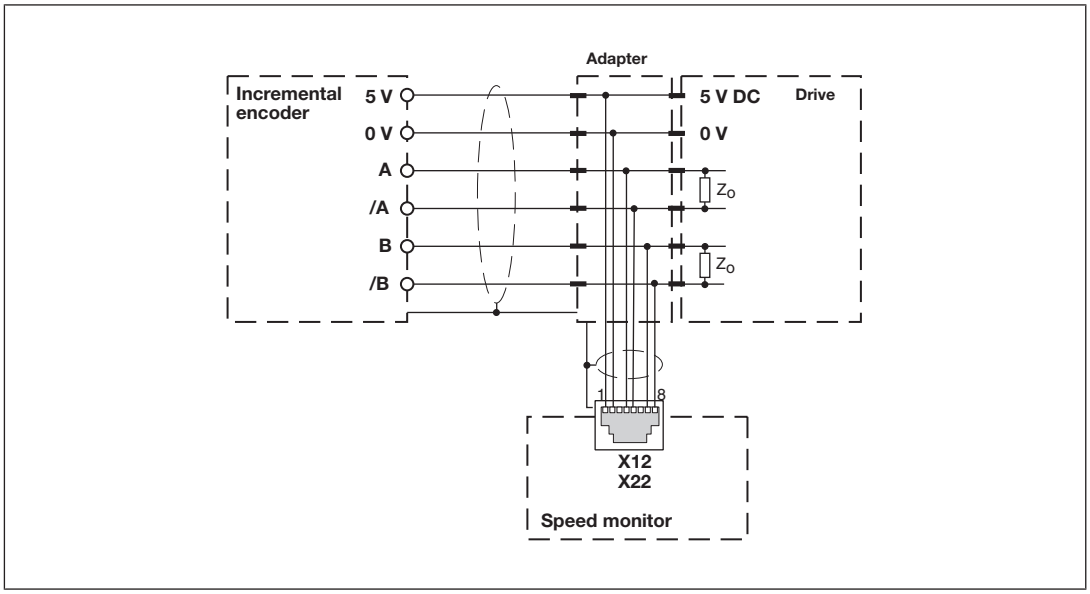

Fig.: Connection via adapter and drive

Connection of proximity switches and incremental encoder

Proximity switch and incremental encoder on various axes

Axis 1:
Proximity switch at I10, I11
or
incremental encoder at X12

Axis 2:
Proximity switch at I20, I21
or
incremental encoder at X22

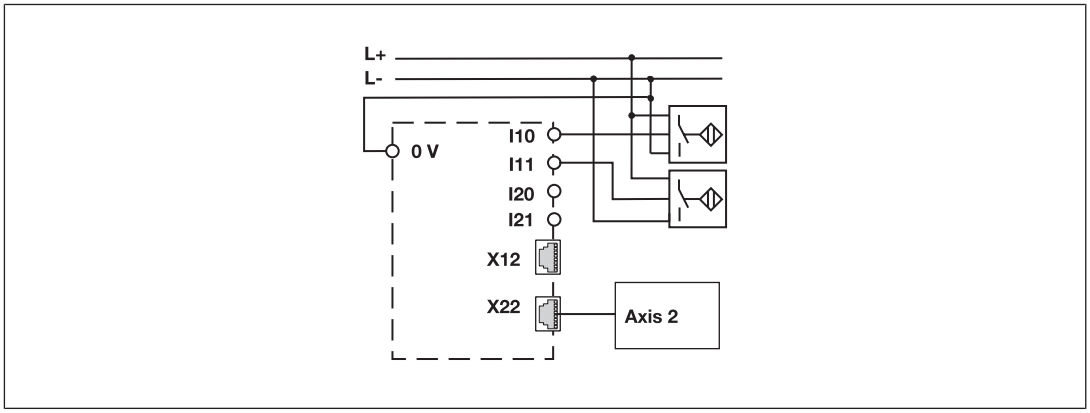

Fig.: Proximity switch and incremental encoder on various axes

Speed monitors
PNOZ ms1p

Proximity switch and incremental encoder on one axis

Axis 1:
Proximity switch at I10 (I11 is unused)
and
Incremental encoder at X12
Axis 2:
Proximity switch at I20 (I21 is unused)
and
Incremental encoder at X22

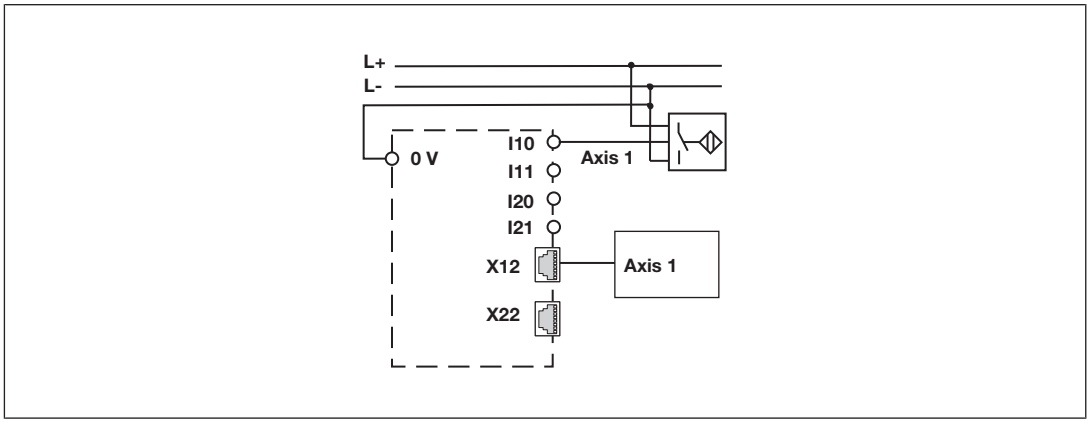

Fig.: Proximity switch and incremental encoder on one axis

Speed monitors
PNOZ ms1p

Connection examples

Connection of 2 proximity switches and an incremental encoder

Description

- 2 proximity switches, pnp-switching
- 1 incremental encoder

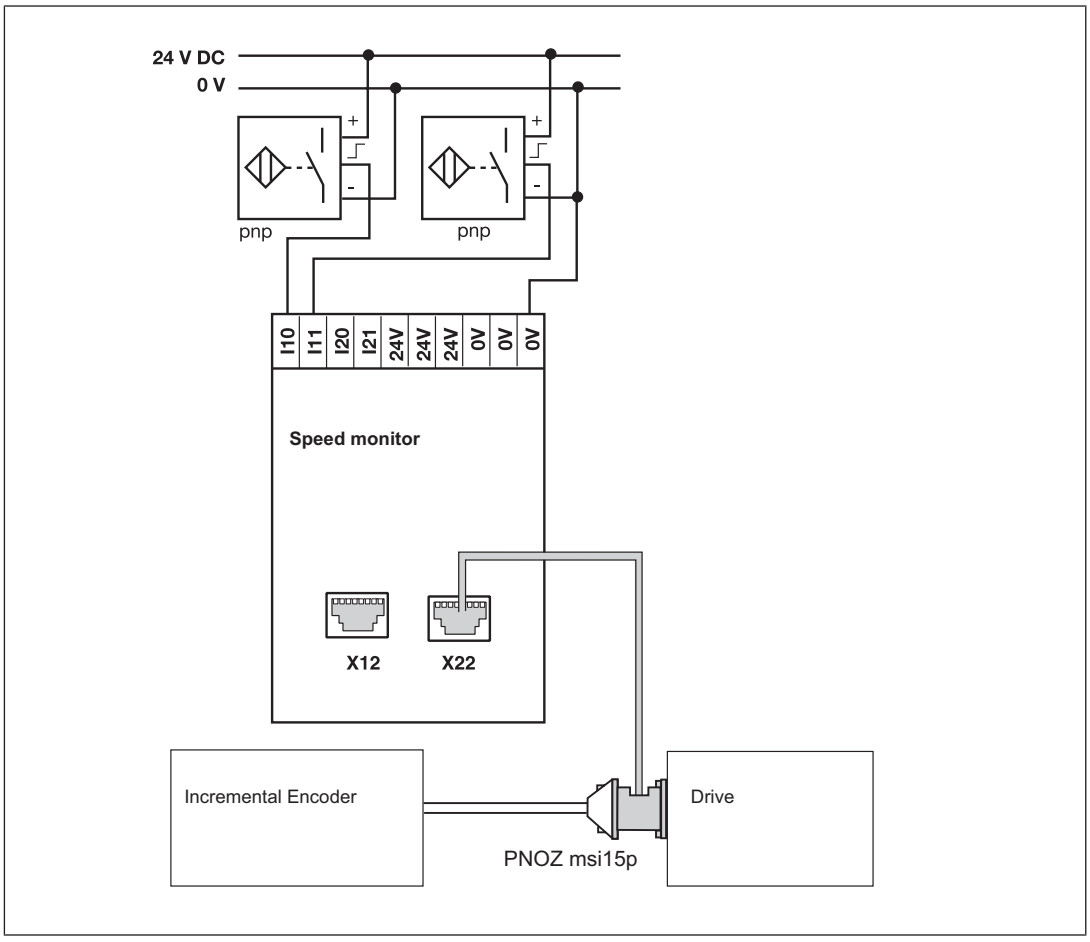

Fig.: Connection of 2 proximity switches, pnp-switching, one incremental encoder

Speed monitors
PNOZ ms1p

Connection of 4 proximity switches

Description

- 4 proximity switches, pnp-switching
- Connection through 24 V terminals and 0 V

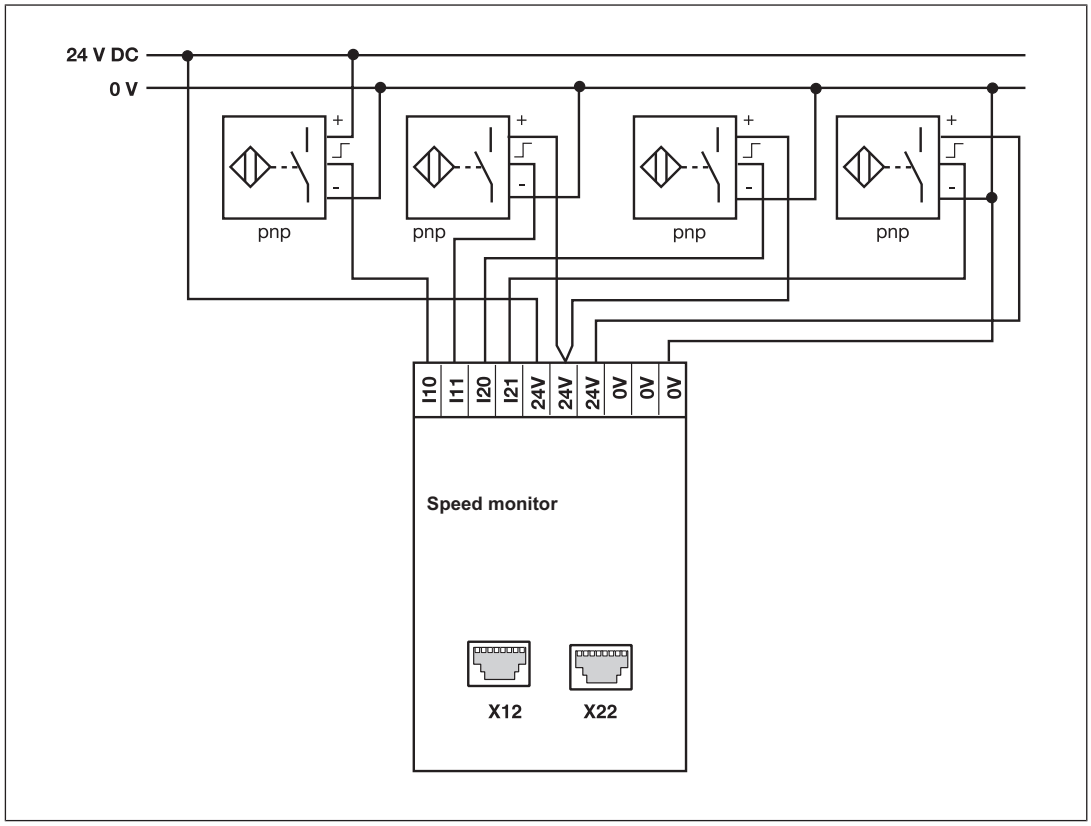

Fig.: Connection of 4 proximity switches, pnp-switching, connection through 24 V terminals and 0 V

Speed monitors
PNOZ ms1p

Connection of an incremental encoder and proximity switch on an axis

Description

- 1 proximity switch, pnp-switching
- 1 incremental encoder
- Incremental encoder and proximity switch on one axis

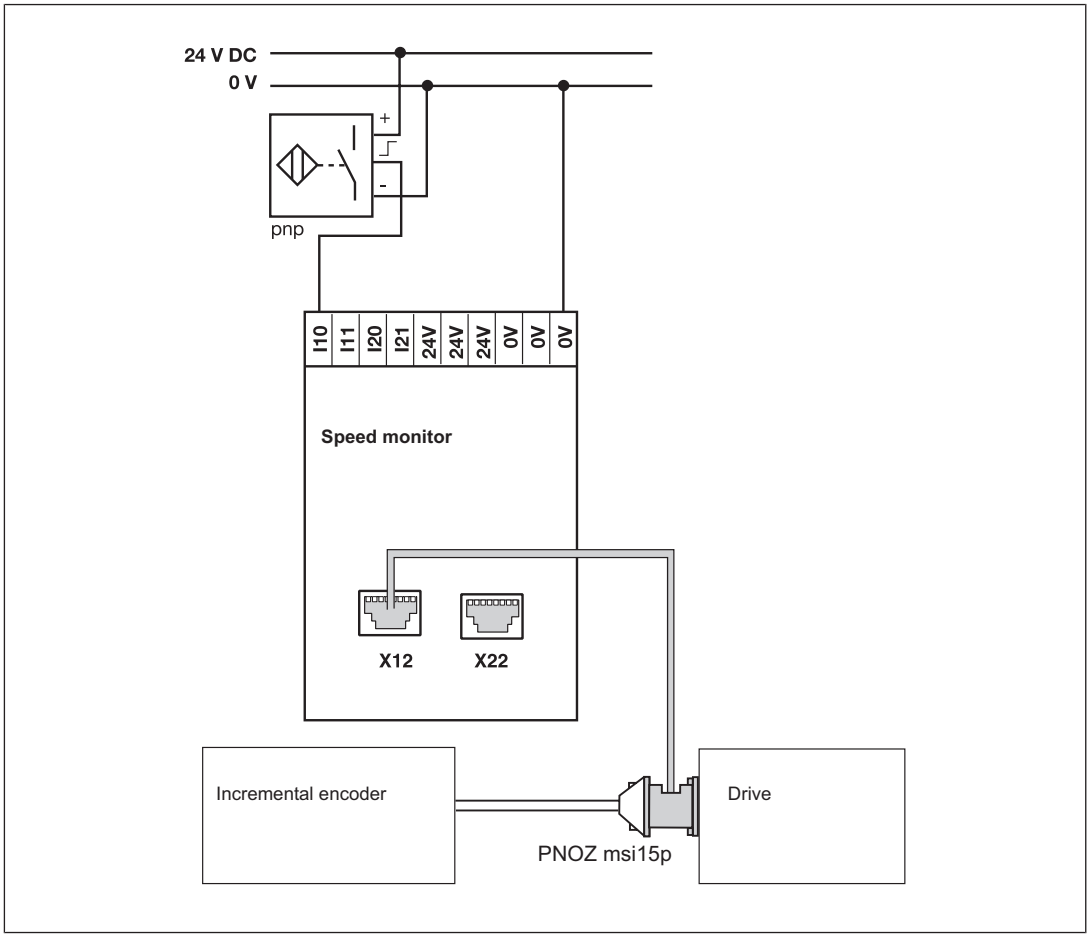

Fig.: Connection of an incremental encoder and proximity switch, pnp-switching, on an axis

Speed monitors
PNOZ ms1p

Technical details

General	
Certifications	**BG, CCC, CE, EAC (Eurasian), KOSHA, TÜV, cU-Lus Listed**
Electrical data	
Supply voltage	
for	**Module supply**
internal	**Via base unit**
Voltage	**5 V**
Kind	**DC**
Voltage tolerance	**-2 %/+2 %**
Power consumption	**1 W**
Status indicator	**LED**
Proximity switch input	
Number of inputs	**4**
Input signal level	
Signal level at "1"	**11 - 30 V**
Signal level at "0"	**-3 - 5 V**
Input resistance	**3 kOhm**
Input's frequency range	**0 - 3 kHz**
Configurable monitoring frequency	
Without hysteresis	**0,1 Hz - 3 kHz**
With hysteresis	**0.2 Hz - 3 kHz**
Incremental encoder input	
Number of inputs	**2**
Connection type	**RJ45 female connector, 8-pin**
Supply voltage for incremental encoders	**5 V DC ±10 %, typ.30 mA**
Input signal level	**0,5 - 5 Vss**
Phase position for the differential signals A, /A and B,/B	**90° ±30°**
Overload protection	**-30 - 30 V**
Input resistance	**10 kOhm**
Input's frequency range	**0 - 500 kHz**
Configurable monitoring frequency	
Without hysteresis	**0,1 Hz - 500 kHz**
With hysteresis	**0.2 Hz - 500 kHz**
Times	
Configurable switch-off delay	**0 - 2.500 ms**
Supply interruption before de-energisation	**20 ms**

Speed monitors
PNOZ ms1p

Times	
Reaction time	
f>100 Hz: Configurable switch-off delay + switch-off delay of base unit	**10 ms**
f<100 Hz: Configurable switch-off delay + switch-off delay of base unit	**10 ms + 1/f**
Environmental data	
Ambient temperature	
In accordance with the standard	**EN 60068-2-14**
Temperature range	**0 - 60 °C**
Storage temperature	
In accordance with the standard	**EN 60068-2-1/-2**
Temperature range	**-25 - 70 °C**
Climatic suitability	
In accordance with the standard	**EN 60068-2-30, EN 60068-2-78**
Humidity	**93 % r. h. at 40 °C**
Condensation during operation	**Not permitted**
EMC	**EN 61131-2**
Vibration	
In accordance with the standard	**EN 60068-2-6**
Frequency	**10 - 150 Hz**
Acceleration	**1g**
Shock stress	
In accordance with the standard	**EN 60068-2-27**
Acceleration	**15g**
Duration	**11 ms**
Max. operating height above sea level	**2000 m**
Airgap creepage	
In accordance with the standard	**EN 61131-2**
Overvoltage category	**III**
Pollution degree	**2**
Rated insulation voltage	**30 V**
Protection type	
In accordance with the standard	**EN 60529**
Mounting area (e.g. control cabinet)	**IP54**
Housing	**IP20**
Terminals	**IP20**
Mechanical data	
Mounting position	**horizontally on mounting rail**
DIN rail	
Top hat rail	**35 x 7,5 EN 50022**
Recess width	**27 mm**

Speed monitors
PNOZ ms1p

Mechanical data	
Material	
Bottom	**PPO UL 94 V0**
Front	**ABS UL 94 V0**
Connection type	**Spring-loaded terminal, screw terminal**
Conductor cross section with screw terminals	
1 core flexible	**0,25 - 1,5 mm², 24 - 16 AWG**
2 core with the same cross section, flexible without crimp connectors or with TWIN crimp connectors	**0,25 - 0,75 mm², 24 - 20 AWG**
Torque setting with screw terminals	**0,25 Nm**
Stripping length with screw terminals	**7 mm**
Conductor cross section with spring-loaded terminals	
1 core flexible without crimp connector	**0,25 - 1,5 mm², 24 - 16 AWG**
1 core flexible with crimp connector	**0,25 - 0,75 mm², 24 - 20 AWG**
Spring-loaded terminals: Terminal points per connection	**1**
Stripping length with spring-loaded terminals	**9 mm**
Dimensions	
Height	**94 mm**
Width	**45 mm**
Depth	**121 mm**
Weight	**192 g**

Where standards are undated, the 2020-07 latest editions shall apply.

Safety characteristic data

Operating mode	EN ISO 13849-1: 2015 PL	EN ISO 13849-1: 2015 Category	EN IEC 62061 SIL CL	EN IEC 62061 PFH_D [1/h]	IEC 61511 SIL	IEC 61511 PFD	EN ISO 13849-1: 2015 T_M [year]
Initiator	**PL e**	**Cat. 3**	**SIL CL 3**	**3,68E-09**	**SIL 3**	**4,84E-05**	**20**
Incremental encoder	**PL e**	**Cat. 3**	**SIL CL 3**	**4,52E-09**	**SIL 3**	**5,80E-05**	**20**

All the units used within a safety function must be considered when calculating the safety characteristic data.

Speed monitors
PNOZ ms1p

Order reference

Product

Product type	Features	Order no.
PNOZ ms1p	Expansion module, speed monitor	773 800

Accessories

Connection terminals

Product type	Features	Order no.
Set spring terminals	1 set of spring-loaded terminals	783 800
Set screw terminals	1 set of screw terminals	793 800

Terminator, jumper

Product type	Features	Order no.
PNOZmulti bus terminator	Terminator	779 110
KOP-XE	Jumper	774 639

Speed monitors
PNOZ ms1p

Application Examples

Safe standstill monitoring

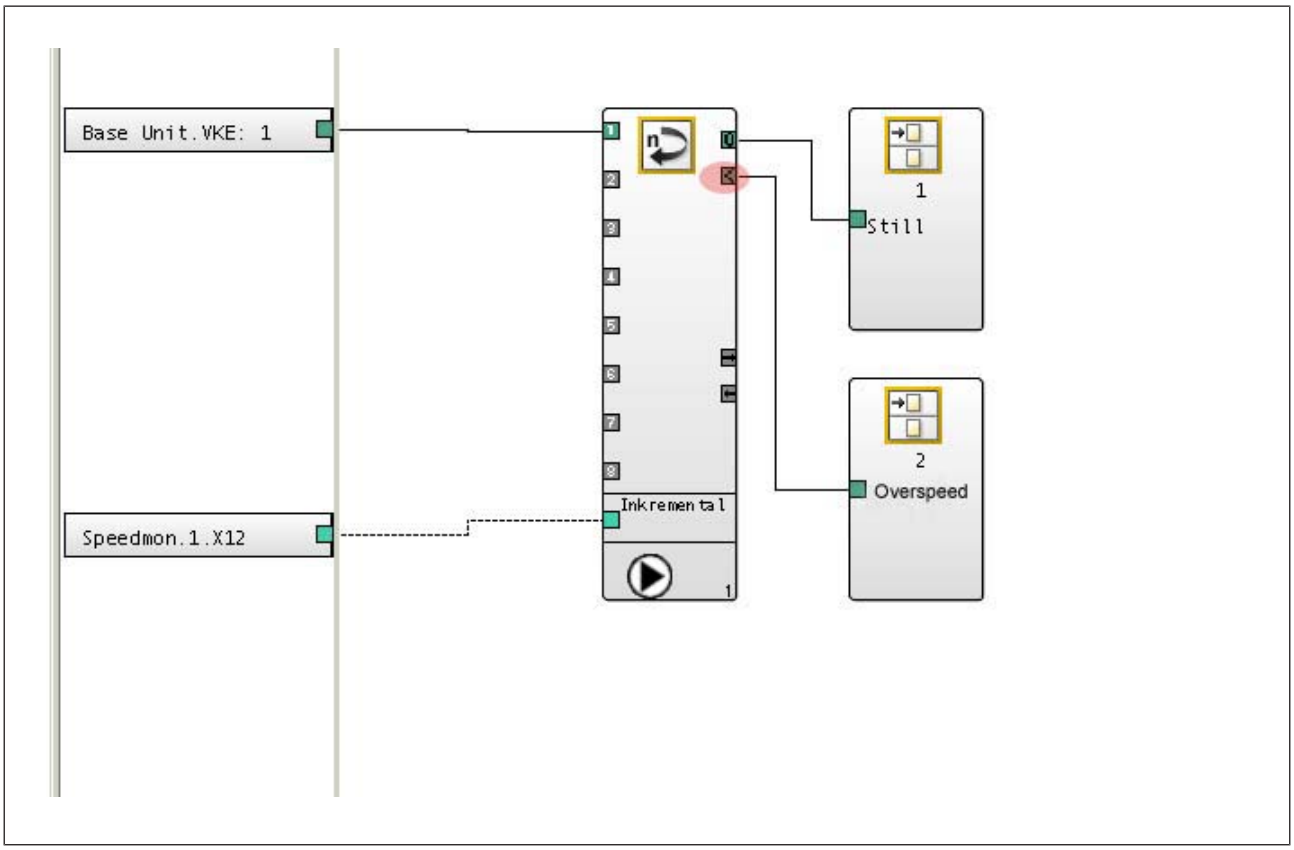

Configuration in the PNOZmulti Configurator

- Standstill: depending on requirement
- Speed n1: greater than the maximum permitted speed.

If the "Overspeed" output (see red marking) = "0", either the maximum permitted speed has been exceeded or the speed monitor has recognised a fault.
"Overdrive" output = "0" must lead to the shutdown of the relevant axis.

Speed monitors
PNOZ ms1p

Safe monitoring with "reduced speed" operating mode

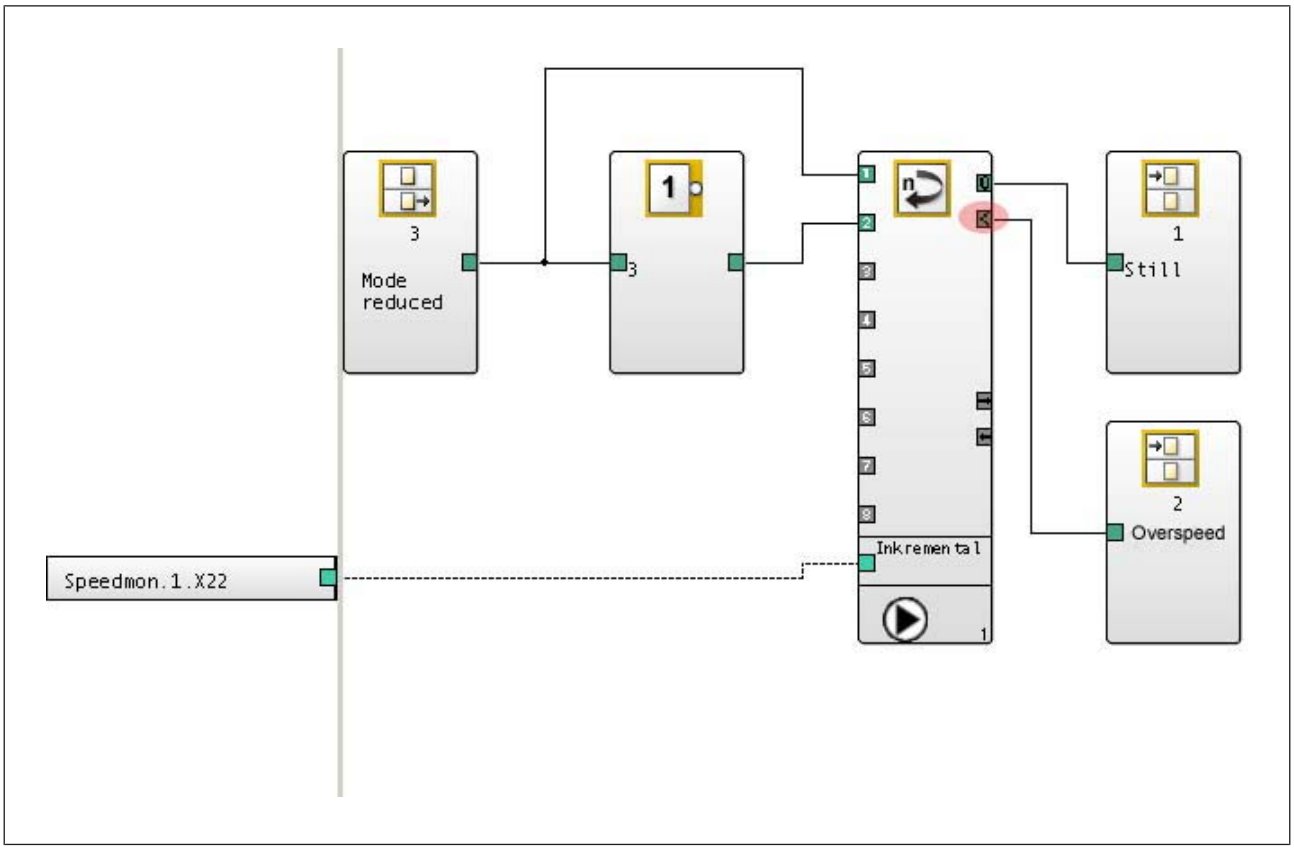

Configuration in the PNOZmulti Configurator

- Standstill: depending on requirement
- Speed n1: reduced speed, depending on requirement
- Speed n2: greater than the maximum permitted speed.

If the "Overspeed" output (see red marking) = "0", either the maximum permitted speed has been exceeded or the speed monitor has recognised a fault.
"Overspeed" output = "0" must lead to the shutdown of the relevant axis, irrespective of whether the "reduced speed" operating mode is active.

Speed monitors
PNOZ ms2p HTL



Overview

Unit features

Application of the product PNOZ ms2p HTL:

Speed monitor for connection to a base unit from the configurable control system PNOZmulti

The product has the following features:

- Monitoring of 2 independent axes
- Connection per axis
  - 1 incremental encoder
    or
  - 2 proximity switches
    or
  - 1 incremental encoder and 1 proximity switch
- Measured variables:
  - Standstill
  - Speed (8 values can be set)
  - Direction of rotation
- Axis types, input device types and start mode can be selected in the PNOZmulti Configurator
- Status indicators for
  - Supply voltage
  - Incremental encoder
  - Proximity switch
  - Axis status, standstill and excess speed
  - Faults on the system
- Proximity switch connection technology: Plug-in connection terminals (either cage clamp terminal or screw terminal)

Speed monitors
PNOZ ms2p HTL

- Incremental encoder connection technology:
  RJ45 female connector
- Galvanic isolation between the connections X1, X12 and X22
- Max. 4 speed monitors can be connected to the base unit

Front view

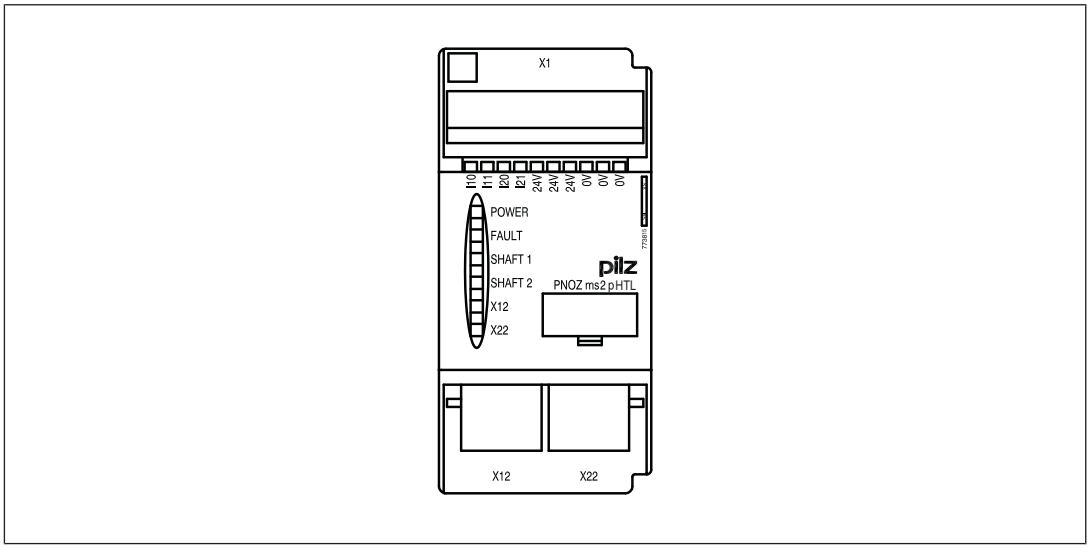

Legend:

- X1:
  - I10, I11:
    Connection terminals for proximity switch at axis 1
  - I20, I21:
    Connection terminals for proximity switch at axis 2
  - 0 V, 24 V:
    Supply connections
- X12:
  - female connector for the connection of an incremental encoder at axis 1
- X22:
  - female connector for the connection of an incremental encoder at axis 2
- LEDs:
  - POWER
  - FAULT
  - SHAFT 1
  - SHAFT 2
  - X12

– X22

Function description

Operation

The speed monitor can independently monitor two axes for standstill, speed and direction of rotation. The speed monitor signals the status of the monitored values to the base unit. Depending on the safety circuit loaded, the values can be transferred from the base unit, e.g. to a relay output on the safety system. Incremental encoders and/or proximity detectors can be used to record the values.

The configuration of the speed monitor is described in detail in the PNOZmulti Configurator's online help.

Block diagram

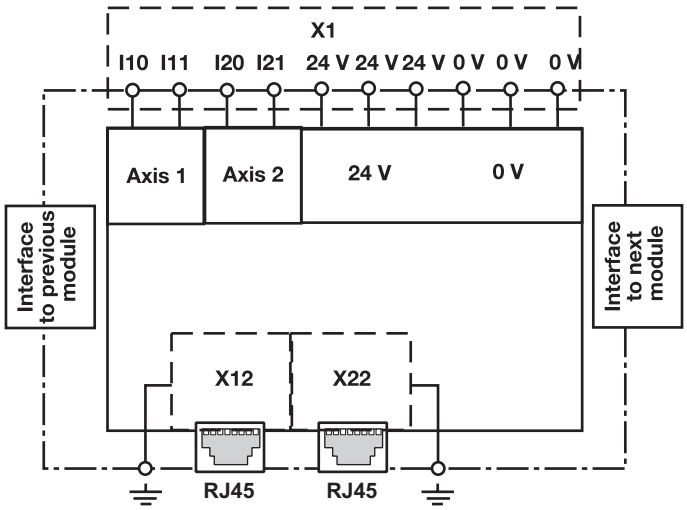

Input device types

Proximity switch

Requirements of the proximity switches

- Only "pnp" type proximity switches may be used (N/O contact, switching to positive).
- The proximity switches require a 24 VDC supply.
- The proximity switches must be fitted so that at least one is always activated (carries a high signal).
- The proximity switches must be fitted so that the recorded signals overlap.

Speed monitors
PNOZ ms2p HTL

- When monitoring with proximity switches we recommend you use proximity switches with hysteresis in order to prevent bounce and therefore incorrect measurements.

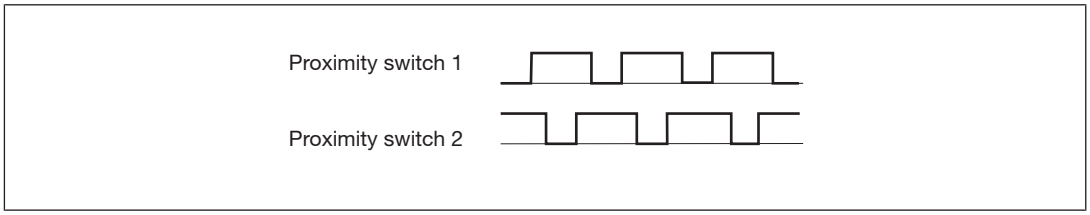

Fig.: Example proximity switch signal behaviour

- Please note the values stated in the technical details

Incremental encoders

Requirements of the incremental encoders

- Only incremental encoders with a differential output of the following type are permitted
  - HTL (12 V – 30 V)
- Please note the values stated in the technical details

Adapter for incremental encoders

The adapter records the data between the encoder and drive and makes it available to the PNOZ ms2p HTL via the RJ45 socket.

Pilz supplies complete adapters as well as ready-made cable with RJ45 connector, which can be used when making your own adapter. The range of products in this area is constantly being expanded. Please contact us about the range of adapters that is currently available.

Incremental encoder and proximity switch on one axis

In order to increase the availability, a proximity switch and an incremental encoder can be configured on one axis for the speed monitor. The speed monitor then monitors 3 signals on an axis: Track A and track B of the incremental encoder and the proximity switch

Standstill monitoring

Standstill is detected when at least two of these signals fall below the standstill frequency.

Monitoring for broken shearpins

If the Broken shearpin monitoring option is activated, a shearpin break is recognised if

- both signals of the incremental encoder fall below the set standstill frequency (standstill)

  and
- the proximity switch exceeds the set standstill frequency (rotating shaft).

Speed monitors
PNOZ ms2p HTL

The recognised broken shearpin leads to safe condition (see status B2 in "Signal statuses" table in Chapter 8 of the operating manual). If individual or multiple signals change, the system may leave a safe state (see "Signal statuses" table).

Hazards that can arise through an automatic restart must be excluded from the user program.

Installation

Dimensions

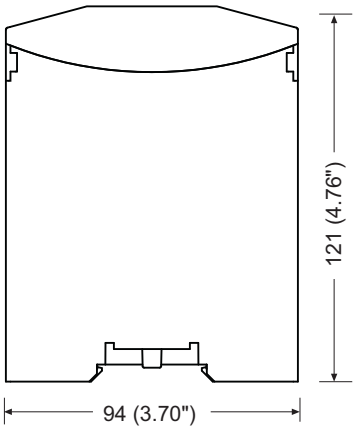

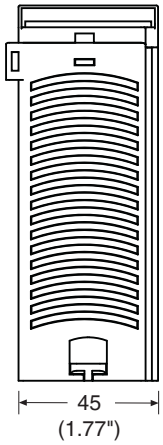

Commissioning

General wiring guidelines

The wiring is defined in the circuit diagram of the PNOZmulti Configurator.

Details of the input type, axis type and reset mode, plus the values for standstill, speed monitoring and direction of rotation are also defined in the PNOZmulti Configurator.

Please note:

- Information given in the Technical details [316] must be followed.
- Use copper wiring with a temperature stability of 75 °C.

On each of the 2 axes you can connect as required:

- 1 incremental encoder

  or
- 2 proximity switches

  or
- 1 incremental encoder and 1 proximity switch

Speed monitors
PNOZ ms2p HTL

	Incremental encoder	Proximity switch
Connection axis 1	X12	-
	-	I10, I11, 0 V
	X12	I10, 0 V
Connection axis 2	X22	-
	-	I20, I21, 0 V
	X22	I20, 0 V

Pin assignment of RJ45 socket

RJ45 socket 8-pin	PIN	Track
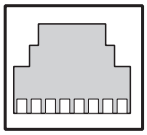 8 1	1	n.c.
	2	0 V
	3	n.c.
	4	A
	5	/A
	6	n.c.
	7	B
	8	/B

Connection of proximity switches

Proceed as follows when connecting proximity switches:

- Terminals I10 and I11: connect the proximity switch for axis 1
- Terminals I20 and I21: connect the proximity switch for axis 2.
- If only one axis is to be monitored, either terminals I10 and I11 or terminals I20 and I21 will remain free.
- When connecting incremental encoders and proximity switches on one axis:
  - Terminals I10: connect proximity switch for axis 1 (I11 is not used)
  - Terminals I20: connect proximity switch for axis 2 (I21 is not used)
- The proximity switch must always be connected to a 0 V terminal of the speed monitor. The 0 V terminals are connected internally.
- Connect proximity switch to 24 VDC of the power supply or the speed monitor (the 24 V terminals of the speed monitor are connected internally)

Speed monitors
PNOZ ms2p HTL

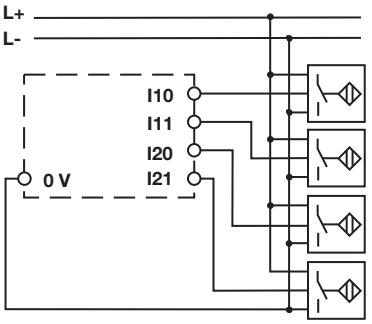

Connection of the incremental encoder

Proceed as follows when connecting the incremental encoder:

- The incremental encoder may be connected via an adapter or directly to the speed monitor.
- The incremental encoder on connector X12 monitors axis 1; the incremental encoder on connector X22 monitors axis 2.
- Use only shielded cables for all connections
- 0 V from the incremental encoder and speed monitor should always be connected.
- Position the terminating resistors of the signal lines as close as possible to the speed monitor input.

Connect signals of the incremental encoder to the speed monitor

Encoder types: 24 V-HTL

- Apply 24 VDC supply voltage to incremental encoder only
- Do not terminate incremental encoder with Z0 = 120 Ohm

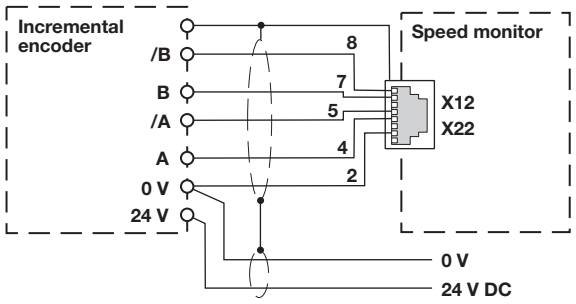

Fig.: Connection to incremental encoder type 24 V-HTL

Speed monitors
PNOZ ms2p HTL

Connect incremental encoder to the speed monitor via an adapter

- The adapter is connected between the incremental encoder and the drive. The output on the adapter is connected to the female RJ45 connector on the speed monitor.
- The adapter can also be used without connecting to a drive.
- The signals relevant for the speed monitor are utilised in parallel by the adapter. The information stated under "Connect incremental encoder signals to the speed monitor" and in the adapter operating manual must be observed when connecting the supply voltage.
- Supply voltage (12 V – 30 V) to incremental encoder only.
- HTL signals may not be fitted with a terminating resistor.

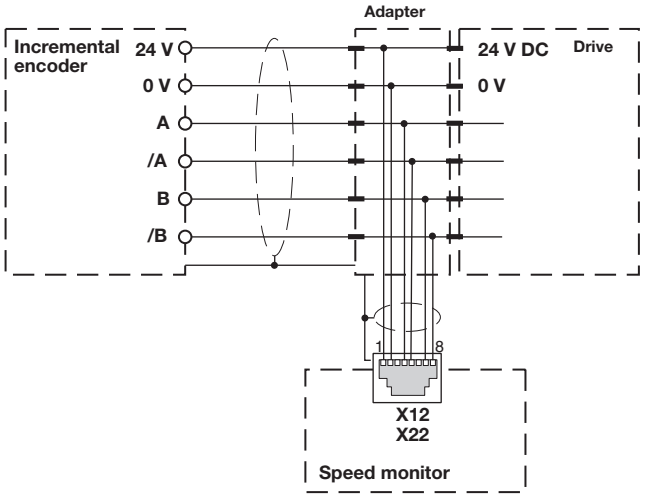

Fig.: Connection via adapter and drive

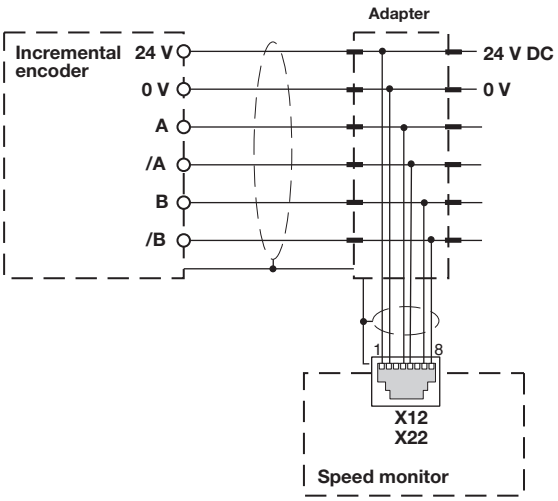

Fig.: Connection via adapter

Speed monitors
PNOZ ms2p HTL

Connection of proximity switches and incremental encoder

Proximity switch and incremental encoder on various axes

Axis 1:
Proximity switch at I10, I11
or
incremental encoder at X12

Axis 2:
Proximity switch at I20, I21
or
incremental encoder at X22

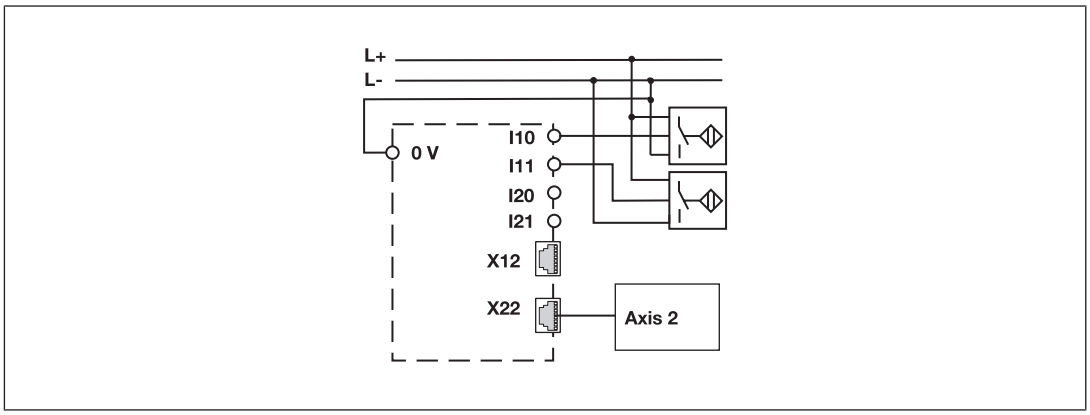

Fig.: Proximity switch and incremental encoder on various axes

Proximity switch and incremental encoder on one axis

Axis 1:
Proximity switch at I10 (I11 is unused)
and
Incremental encoder at X12
Axis 2:
Proximity switch at I20 (I21 is unused)
and
Incremental encoder at X22

Speed monitors
PNOZ ms2p HTL

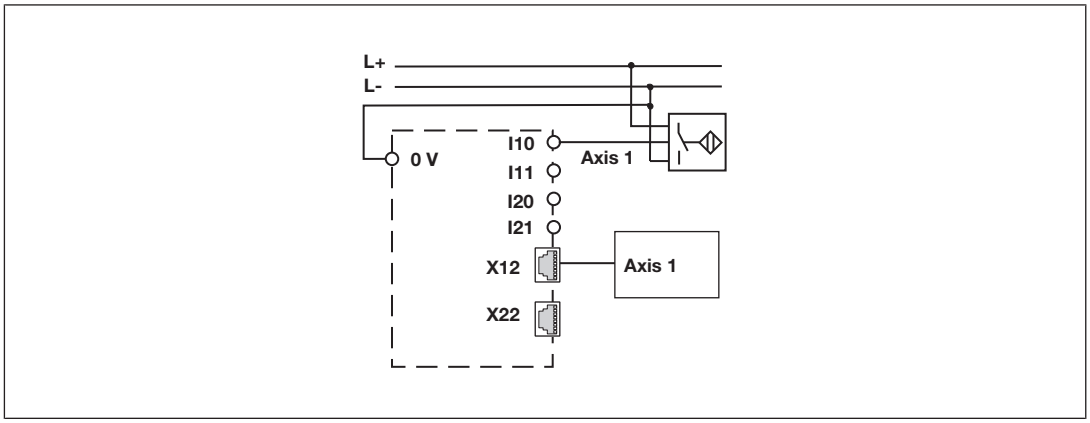

Fig.: Proximity switch and incremental encoder on one axis

Speed monitors
PNOZ ms2p HTL

Connection examples

Connection of 2 proximity switches and an incremental encoder

Description

- 2 proximity switches, pnp-switching
- 1 incremental encoder

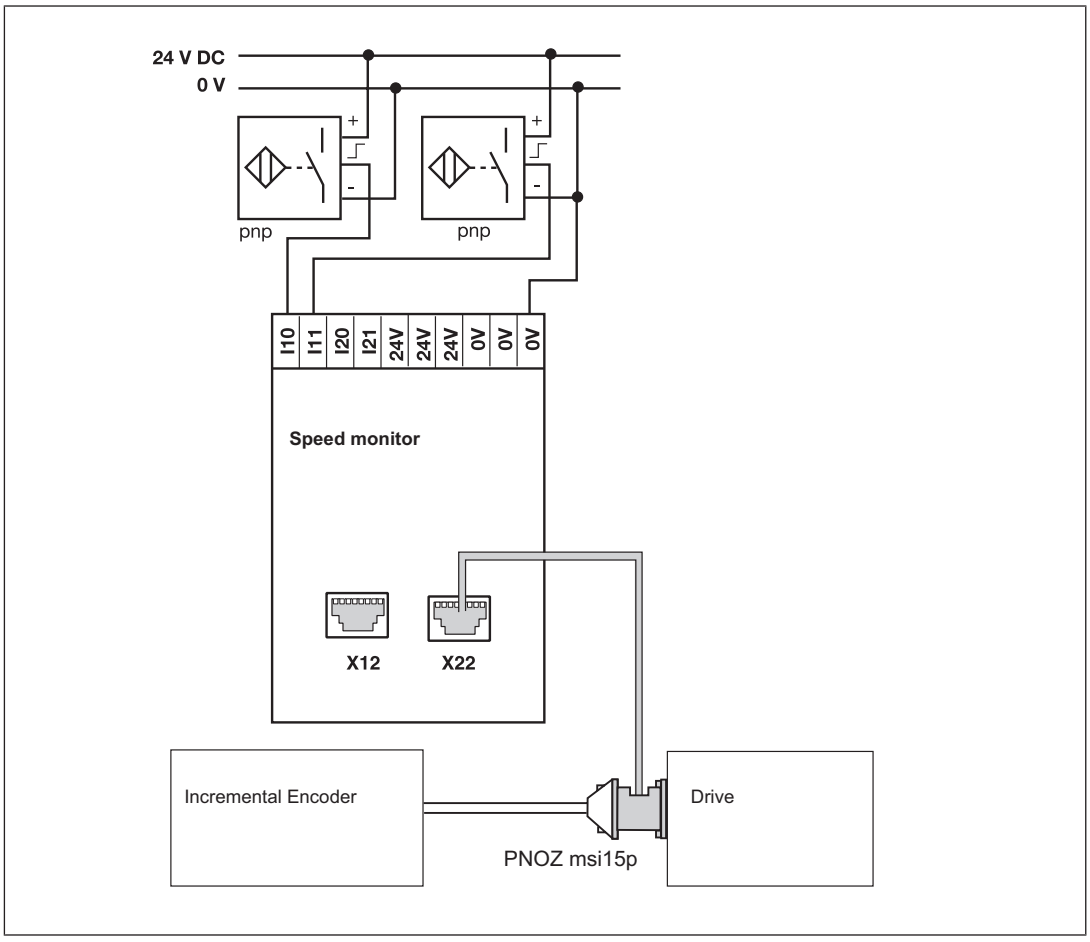

Fig.: Connection of 2 proximity switches, pnp-switching, one incremental encoder

Speed monitors
PNOZ ms2p HTL

Connection of 4 proximity switches

Description

- 4 proximity switches, pnp-switching
- Connection through 24 V terminals and 0 V

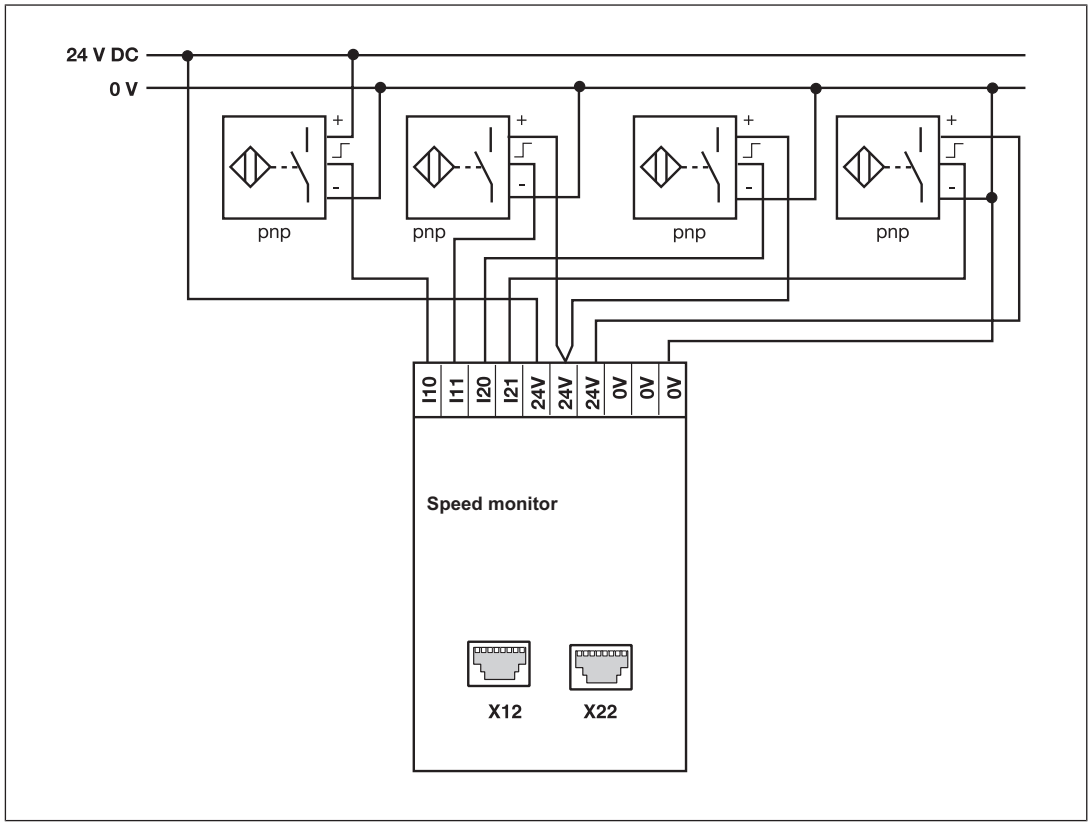

Fig.: Connection of 4 proximity switches, pnp-switching, connection through 24 V terminals and 0 V

Speed monitors
PNOZ ms2p HTL

Connection of an incremental encoder and proximity switch on an axis

Description

- 1 proximity switch, pnp-switching
- 1 incremental encoder
- Incremental encoder and proximity switch on one axis

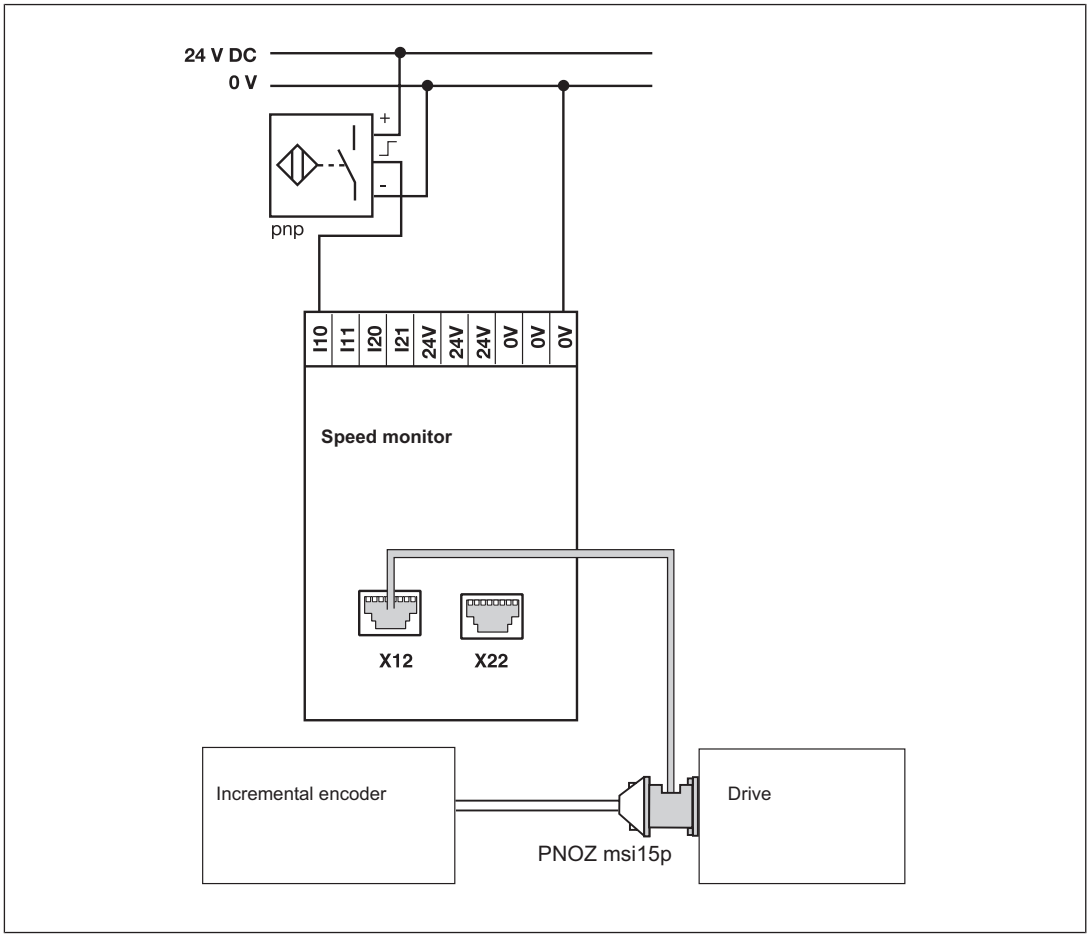

Fig.: Connection of an incremental encoder and proximity switch, pnp-switching, on an axis

Speed monitors
PNOZ ms2p HTL

Technical details

General	
Certifications	**BG, CCC, CE, EAC (Eurasian), KOSHA, TÜV, cU-Lus Listed**
Electrical data	
Supply voltage	
for	**Module supply**
internal	**Via base unit**
Voltage	**5 V**
Kind	**DC**
Voltage tolerance	**-2 %/+2 %**
Power consumption	**1 W**
Status indicator	**LED**
Proximity switch input	
Number of inputs	**4**
Input signal level	
Signal level at "1"	**11 - 30 V**
Signal level at "0"	**-3 - 5 V**
Input resistance	**3 kOhm**
Input's frequency range	**0 - 3 kHz**
Configurable monitoring frequency	
Without hysteresis	**0,1 Hz - 3 kHz**
With hysteresis	**0.2 Hz - 3 kHz**
Incremental encoder input	
Number of inputs	**2**
Connection type	**RJ45 female connector, 8-pin**
Input signal level	**12 - 30 Vss**
Phase position for the differential signals A, /A and B,/B	**90° ±30°**
Overload protection	**-30 - 30 V**
Input resistance	**10 kOhm**
Input's frequency range	**0 - 200 kHz**
Configurable monitoring frequency	
Without hysteresis	**0,1 Hz - 200 kHz**
With hysteresis	**0.2 Hz - 200 kHz**
Times	
Configurable switch-off delay	**0 - 2.500 ms**
Supply interruption before de-energisation	**20 ms**

Speed monitors
PNOZ ms2p HTL

Times	
Reaction time	
f>100 Hz: Configurable switch-off delay + switch-off delay of base unit	**10 ms**
f<100 Hz: Configurable switch-off delay + switch-off delay of base unit	**10 ms + 1/f**
Environmental data	
Ambient temperature	
In accordance with the standard	**EN 60068-2-14**
Temperature range	**0 - 60 °C**
Storage temperature	
In accordance with the standard	**EN 60068-2-1/-2**
Temperature range	**-25 - 70 °C**
Climatic suitability	
In accordance with the standard	**EN 60068-2-30, EN 60068-2-78**
Humidity	**93 % r. h. at 40 °C**
Condensation during operation	**Not permitted**
EMC	**EN 61131-2**
Vibration	
In accordance with the standard	**EN 60068-2-6**
Frequency	**10 - 150 Hz**
Acceleration	**1g**
Shock stress	
In accordance with the standard	**EN 60068-2-27**
Acceleration	**15g**
Duration	**11 ms**
Max. operating height above sea level	**2000 m**
Airgap creepage	
In accordance with the standard	**EN 61131-2**
Overvoltage category	**III**
Pollution degree	**2**
Rated insulation voltage	**30 V**
Protection type	
In accordance with the standard	**EN 60529**
Mounting area (e.g. control cabinet)	**IP54**
Housing	**IP20**
Terminals	**IP20**
Mechanical data	
Mounting position	**horizontally on mounting rail**
DIN rail	
Top hat rail	**35 x 7,5 EN 50022**
Recess width	**27 mm**

Speed monitors
PNOZ ms2p HTL

Mechanical data	
Material	
Bottom	**PPO UL 94 V0**
Front	**ABS UL 94 V0**
Connection type	**Spring-loaded terminal, screw terminal**
Conductor cross section with screw terminals	
1 core flexible	**0,25 - 1,5 mm², 24 - 16 AWG**
2 core with the same cross section, flexible without crimp connectors or with TWIN crimp connectors	**0,25 - 0,75 mm², 24 - 20 AWG**
Torque setting with screw terminals	**0,25 Nm**
Stripping length with screw terminals	**7 mm**
Conductor cross section with spring-loaded terminals	
1 core flexible without crimp connector	**0,25 - 1,5 mm², 24 - 16 AWG**
1 core flexible with crimp connector	**0,25 - 0,75 mm², 24 - 20 AWG**
Spring-loaded terminals: Terminal points per connection	**1**
Stripping length with spring-loaded terminals	**9 mm**
Dimensions	
Height	**94 mm**
Width	**45 mm**
Depth	**121 mm**
Weight	**220 g**

Where standards are undated, the 2020-07 latest editions shall apply.

Safety characteristic data

Operating mode	EN ISO 13849-1: 2015 PL	EN ISO 13849-1: 2015 Category	EN IEC 62061 SIL CL	EN IEC 62061 PFH_D [1/h]	IEC 61511 SIL	IEC 61511 PFD	EN ISO 13849-1: 2015 T_M [year]
Initiator	**PL e**	**Cat. 3**	**SIL CL 3**	**3,68E-09**	**SIL 3**	**4,84E-05**	**20**
Incremental encoder	**PL e**	**Cat. 3**	**SIL CL 3**	**6,73E-09**	**SIL 3**	**8,18E-05**	**20**

All the units used within a safety function must be considered when calculating the safety characteristic data.

Speed monitors
PNOZ ms2p HTL

Order reference

Product

Product type	Features	Order No.
PNOZ ms2p HTL	Expansion module, speed monitor	773 815

Accessories

Terminator, jumper

Product type	Features	Order no.
PNOZmulti bus terminator	Terminator	779 110
KOP-XE	Jumper	774 639

Connection terminals

Product type	Features	Order no.
Set spring terminals	1 set of spring-loaded terminals	783 800
Set screw terminals	1 set of screw terminals	793 800

Speed monitors
PNOZ ms2p HTL

Application Examples

Safe standstill monitoring

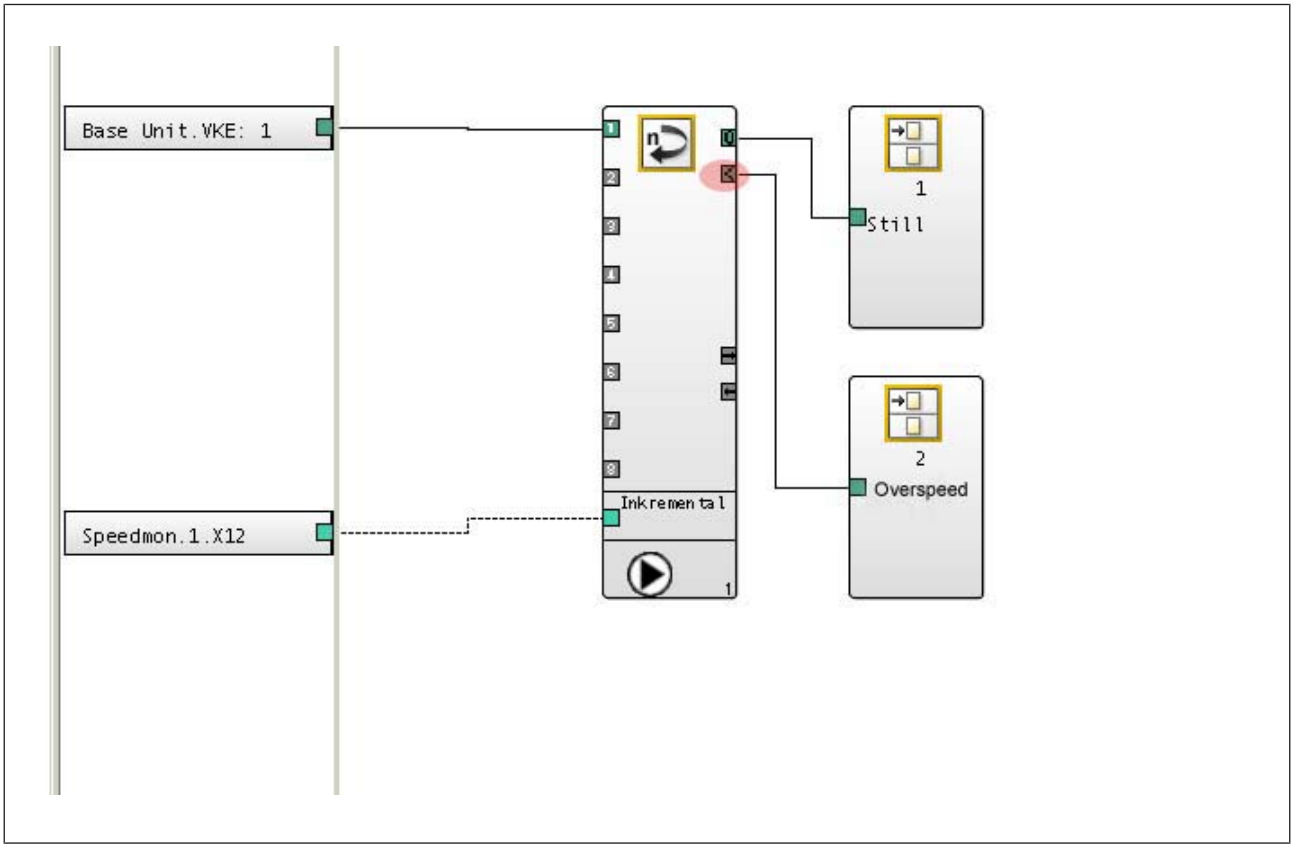

Configuration in the PNOZmulti Configurator

- Standstill: depending on requirement
- Speed n1: greater than the maximum permitted speed.

If the "Overspeed" output (see red marking) = "0", either the maximum permitted speed has been exceeded or the speed monitor has recognised a fault.
"Overspeed" output = "0" must lead to the shutdown of the relevant axis.

Speed monitors
PNOZ ms2p HTL

Safe monitoring with "reduced speed" operating mode

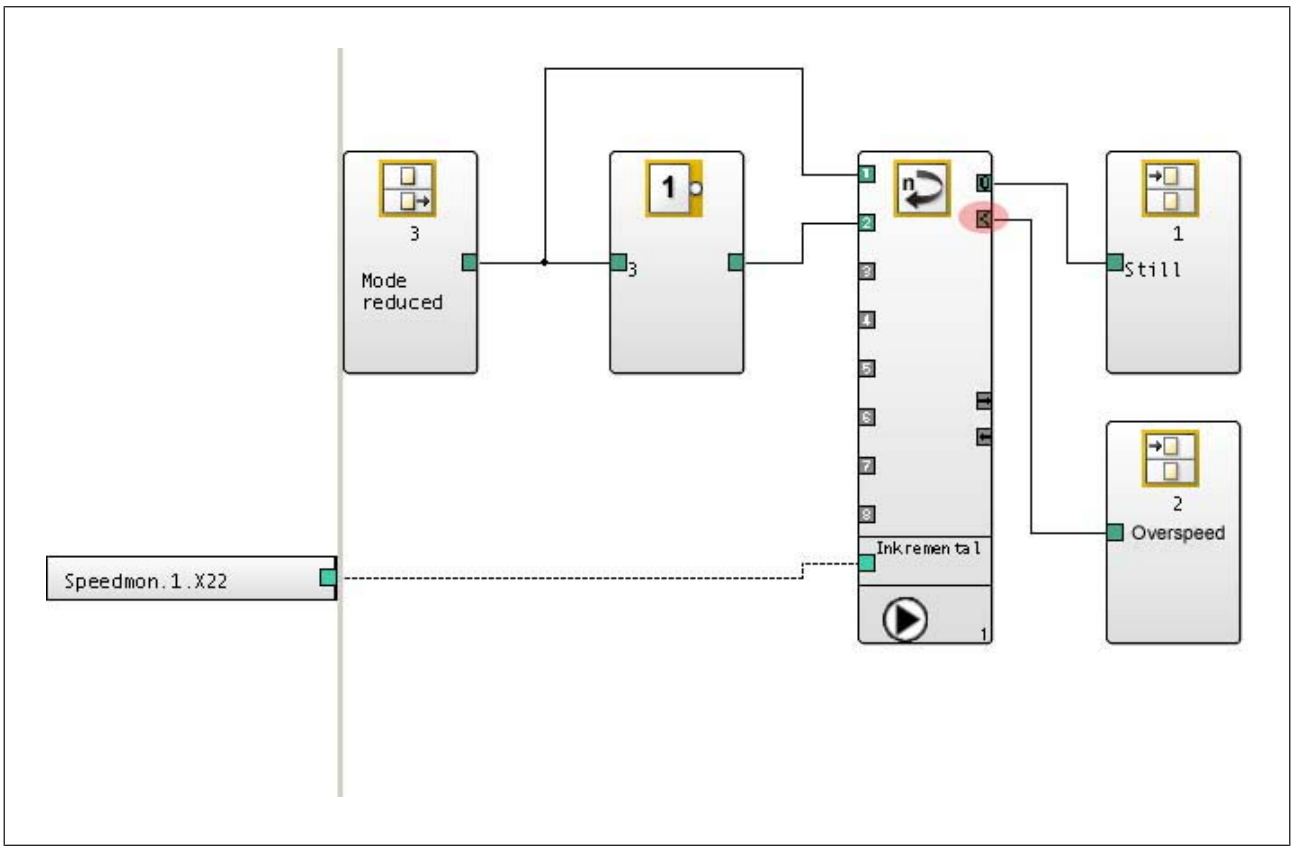

Configuration in the PNOZmulti Configurator

- Standstill: depending on requirement
- Speed n1: reduced speed, depending on requirement
- Speed n2: greater than the maximum permitted speed.

If the "Overspeed" output (see red marking) = "0", either the maximum permitted speed has been exceeded or the speed monitor has recognised a fault.
"Overspeed" output = "0" must lead to the shutdown of the relevant axis, irrespective of whether the "reduced speed" operating mode is active.

Speed monitors
PNOZ ms2p TTL (Coated Version)



Overview

Unit features

Application of the product PNOZ ms2p TTL (Coated Version):

Speed monitor for connection to a base unit from the configurable control system PNOZmulti

The product has the following features:

- Monitoring of 2 independent axes
- Connection per axis
  - 1 incremental encoder
    or
  - 2 proximity switches
    or
  - 1 incremental encoder and 1 proximity switch
- Measured variables:
  - Standstill
  - Speed (8 values can be set)
  - Direction of rotation
- Axis types, input device types and start mode can be selected in the PNOZmulti Configurator
- Status indicators for
  - Supply voltage
  - Incremental encoder
  - Proximity switch
  - Axis status, standstill and excess speed
  - Faults on the system
- Proximity switch connection technology: Plug-in connection terminals (either cage clamp terminal or screw terminal)

Speed monitors
PNOZ ms2p TTL (Coated Version)

- Incremental encoder connection technology:
  RJ45 female connector
- Galvanic isolation between the connections X1, X12 and X22
- Max. 4 speed monitors can be connected to the base unit
- Coated version:
  Increased environmental requirements (see Technical details [335])

Front view

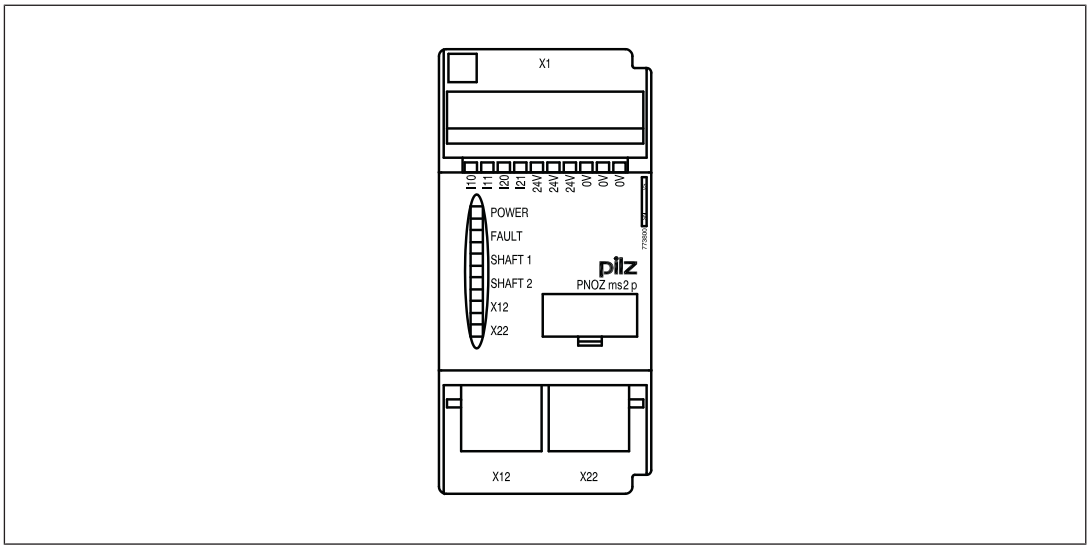

Key:

- X1:
  - I10, I11:
    connection terminals for proximity switch at axis 1
  - I20, I21:
    connection terminals for proximity switch at axis 2
  - 0 V, 24 V:
    supply connections
- X12:
  - female connector for the connection of an incremental encoder at axis 1
- X22:
  - female connector for the connection of an incremental encoder at axis 2
- LEDs:
  - POWER
  - FAULT
  - SHAFT 1
  - SHAFT 2

Speed monitors
PNOZ ms2p TTL (Coated Version)

– X12
– X22

Function description

Operation

The speed monitor can independently monitor two axes for standstill, speed and direction of rotation. The speed monitor signals the status of the monitored values to the base unit. Depending on the safety circuit loaded, the values can be transferred from the base unit, e.g. to a relay output on the safety system. Incremental encoders and/or proximity detectors can be used to record the values.

The configuration of the speed monitor is described in detail in the PNOZmulti Configurator's online help.

Block diagram

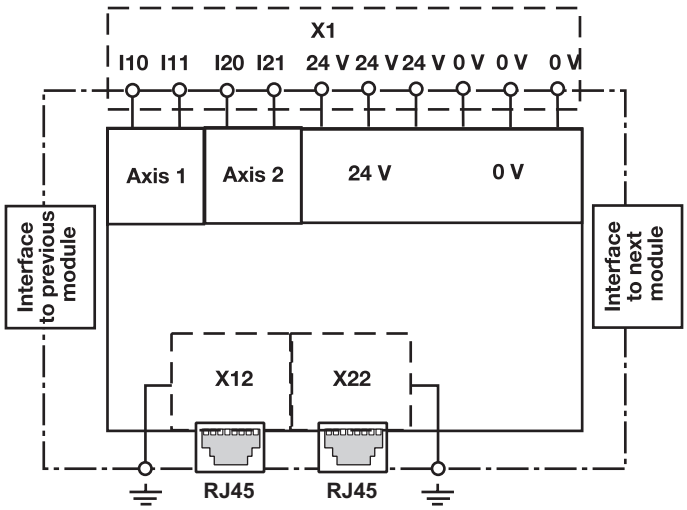

Input device types

Proximity switch

Requirements of the proximity switches

- Only "pnp" type proximity switches may be used (N/O contact, switching to positive).
- The proximity switches require a 24 VDC supply.
- The proximity switches must be fitted so that at least one is always activated (carries a high signal).

Speed monitors
PNOZ ms2p TTL (Coated Version)

- The proximity switches must be fitted so that the recorded signals overlap.
- When monitoring with proximity switches we recommend you use proximity switches with hysteresis in order to prevent bounce and therefore incorrect measurements.

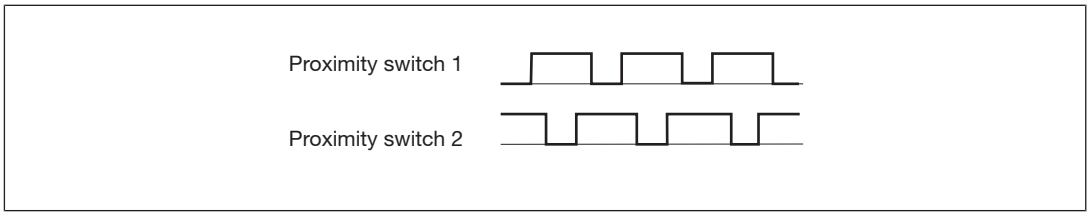

Fig.: Example proximity switch signal behaviour

- Please note the values stated in the technical details

Incremental encoders

Requirements of the incremental encoders

- Only incremental encoders with a differential output of the following type are permitted
  - Sin/Cos
  - TTL (RS422)
- Please note the values stated in the technical details

Adapter for incremental encoders

The adapter records the data between the encoder and drive and makes it available to the PNOZ ms2p TTL (Coated Version) via the RJ45 socket.

Pilz supplies complete adapters as well as ready-made cable with RJ45 connector, which can be used when making your own adapter. The range of products in this area is constantly being expanded. Please contact us about the range of adapters that is currently available.

Incremental encoder and proximity switch on one axis

In order to increase the availability, a proximity switch and an incremental encoder can be configured on one axis for the speed monitor. The speed monitor then monitors 3 signals on an axis: Track A and track B of the incremental encoder and the proximity switch

Standstill monitoring

Standstill is detected when at least two of these signals fall below the standstill frequency.

Monitoring for broken shearpins

If the Broken shearpin monitoring option is activated, a shearpin break is recognised if

- both signals of the incremental encoder fall below the set standstill frequency (standstill)

  and

- the proximity switch exceeds the set standstill frequency (rotating shaft).

The recognised broken shearpin leads to safe condition (see status B2 in "Signal statuses" table in Chapter 8 of the operating manual). If individual or multiple signals change, the system may leave a safe state (see "Signal statuses" table).

Hazards that can arise through an automatic restart must be excluded from the user program.

Installation

Dimensions

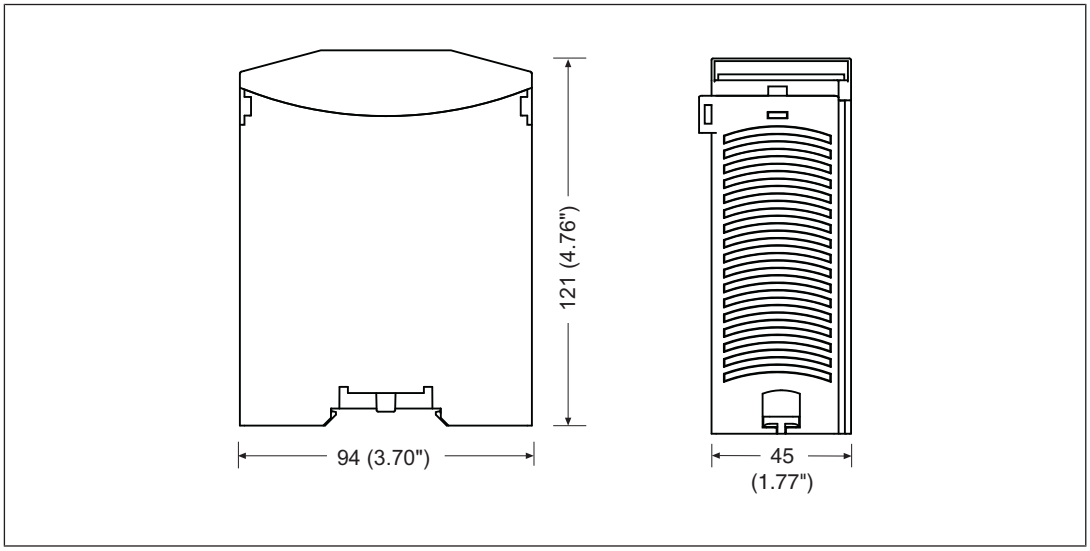

Commissioning

General wiring guidelines

The wiring is defined in the circuit diagram of the PNOZmulti Configurator.

Details of the input type, axis type and reset mode, plus the values for standstill, speed monitoring and direction of rotation are also defined in the PNOZmulti Configurator.

Please note:

- Information given in the Technical details [📖 335] must be followed.
- Use copper wiring with a temperature stability of 75 °C.

On each of the 2 axes you can connect as required:

Speed monitors
PNOZ ms2p TTL (Coated Version)

- 1 incremental encoder

  or
- 2 proximity switches

  or
- 1 incremental encoder and 1 proximity switch

	Incremental encoder	Proximity switch
Connection axis 1	X12	-
	-	I10, I11, 0 V
	X12	I10, 0 V
Connection axis 2	X22	-
	-	I20, I21, 0 V
	X22	I20, 0 V

Pin assignment of RJ45 socket

RJ45 socket 8-pin	PIN	Track
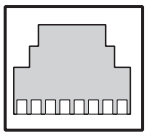 8 1	1	n.c.
	2	0 V
	3	n.c.
	4	A
	5	/A
	6	n.c.
	7	B
	8	/B

Connection of proximity switches

Proceed as follows when connecting proximity switches:

- Terminals I10 and I11: connect the proximity switch for axis 1
- Terminals I20 and I21: connect the proximity switch for axis 2.
- If only one axis is to be monitored, either terminals I10 and I11 or terminals I20 and I21 will remain free.
- When connecting incremental encoders and proximity switches on one axis:
  - Terminals I10: connect proximity switch for axis 1 (I11 is not used)
  - Terminals I20: connect proximity switch for axis 2 (I21 is not used)

Speed monitors
PNOZ ms2p TTL (Coated Version)

- The proximity switch must always be connected to a 0 V terminal of the speed monitor. The 0 V terminals are connected internally.
- Connect proximity switch to 24 VDC of the power supply or the speed monitor (the 24 V terminals of the speed monitor are connected internally)

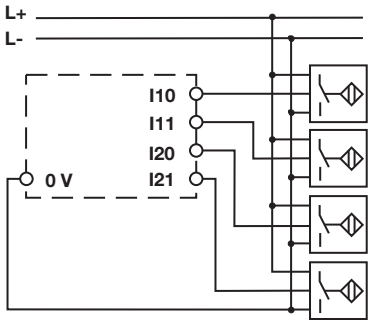

Connection of the incremental encoder

Proceed as follows when connecting the incremental encoder:

- The incremental encoder may be connected via an adapter or directly to the speed monitor.
- The incremental encoder on connector X12 monitors axis 1; the incremental encoder on connector X22 monitors axis 2.
- Use only shielded cables for all connections
- 0 V from the incremental encoder and speed monitor should always be connected.
- Position the terminating resistors of the signal lines as close as possible to the speed monitor input.

Connect signals of the incremental encoder to the speed monitor

Encoder types: 1 Vss, 5 V-TTL

- Apply 5 VDC to incremental encoder only
- Terminate incremental encoder with Z_0 = 120 Ohm

Speed monitors
PNOZ ms2p TTL (Coated Version)

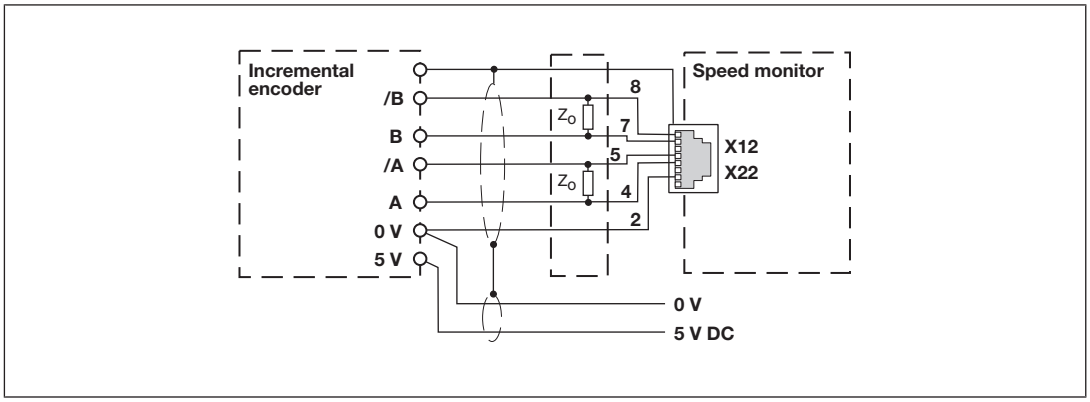

Fig.: Connection to incremental encoder type 1 Vss, 5 V-TTL

Connect incremental encoder to the speed monitor via an adapter

- The adapter is connected between the incremental encoder and the drive. The output on the adapter is connected to the female RJ45 connector on the speed monitor.
- The adapter can also be used without connecting to a drive. The signal lines can then be terminated directly at the adapter with Z_O = 120 Ohm.
- If the signal lines in the drive are already terminated with Z_O = 120 Ohm, the incremental encoder may no longer be terminated.
- The signals relevant for the speed monitor are utilised in parallel by the adapter. The information stated under "Connect incremental encoder signals to the speed monitor" and in the adapter operating manual must be observed when connecting the supply voltage.
- Supply only incremental encoder with 5 VDC.

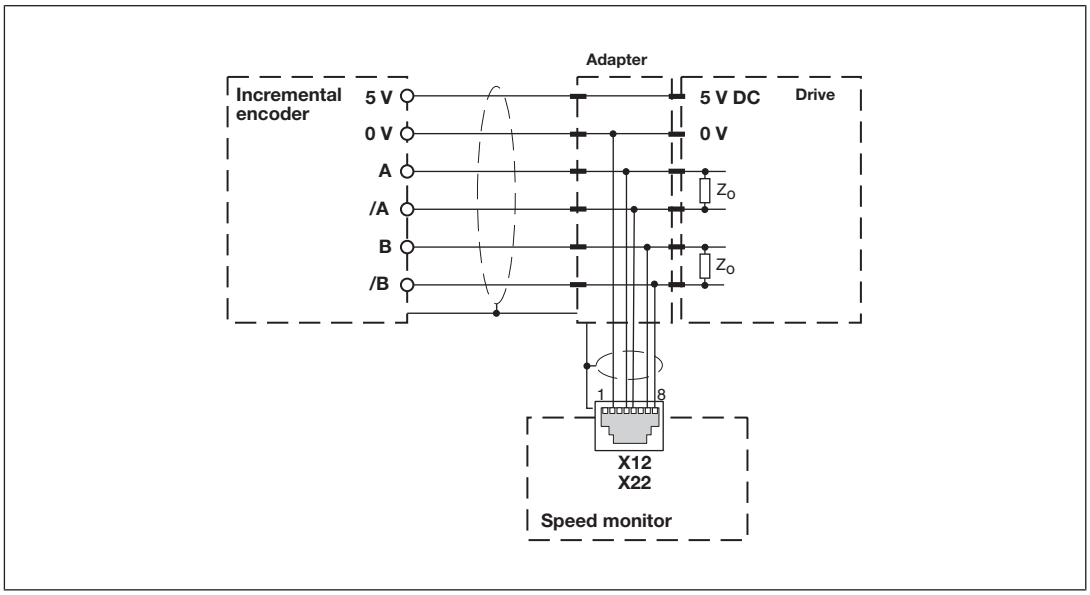

Fig.: Connection via adapter and drive

Speed monitors
PNOZ ms2p TTL (Coated Version)

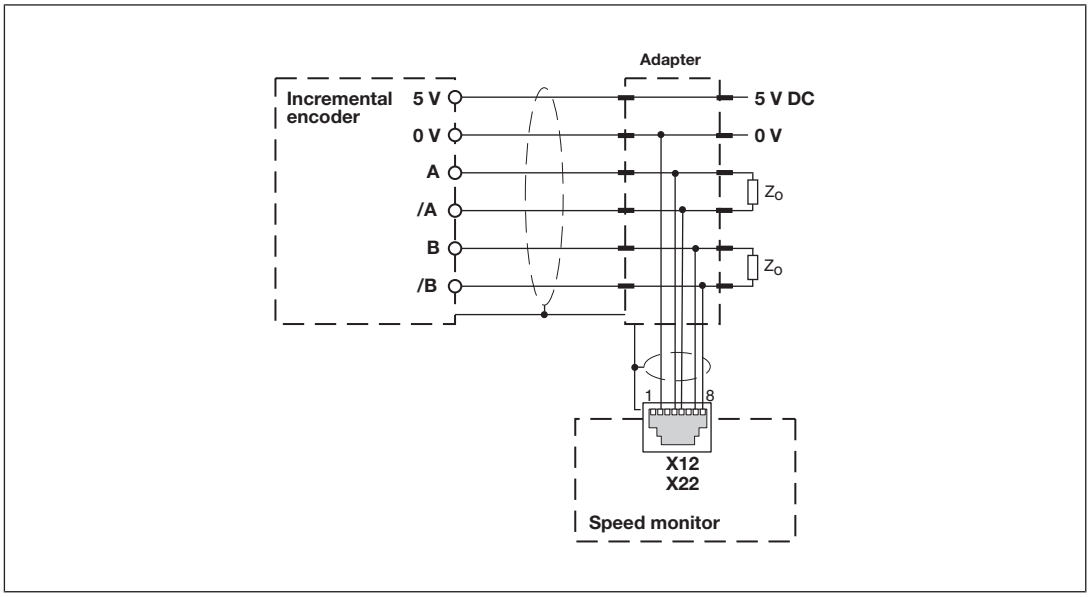

Fig.: Connection via adapter

Connection of proximity switches and incremental encoder

Proximity switch and incremental encoder on various axes

Axis 1:
Proximity switch at I10, I11
or
incremental encoder at X12

Axis 2:
Proximity switch at I20, I21
or
incremental encoder at X22

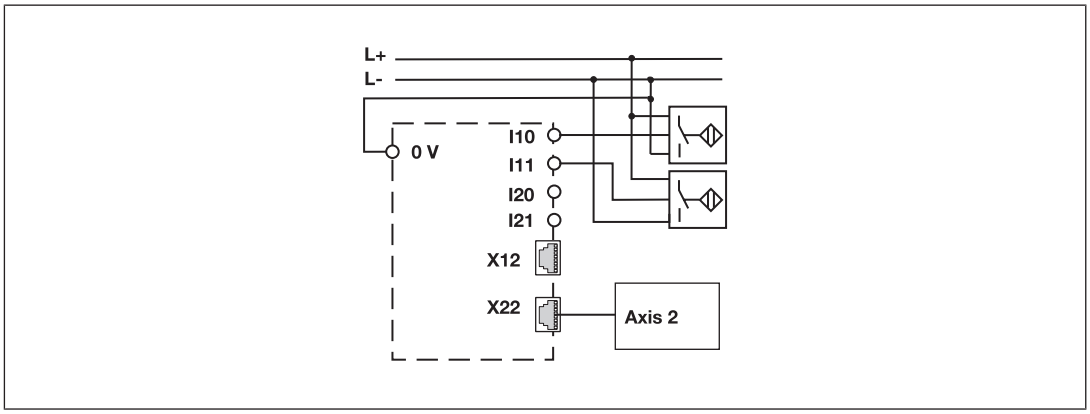

Fig.: Proximity switch and incremental encoder on various axes

Speed monitors
PNOZ ms2p TTL (Coated Version)

Proximity switch and incremental encoder on one axis

Axis 1:
Proximity switch at I10 (I11 is unused)
and
Incremental encoder at X12
Axis 2:
Proximity switch at I20 (I21 is unused)
and
Incremental encoder at X22

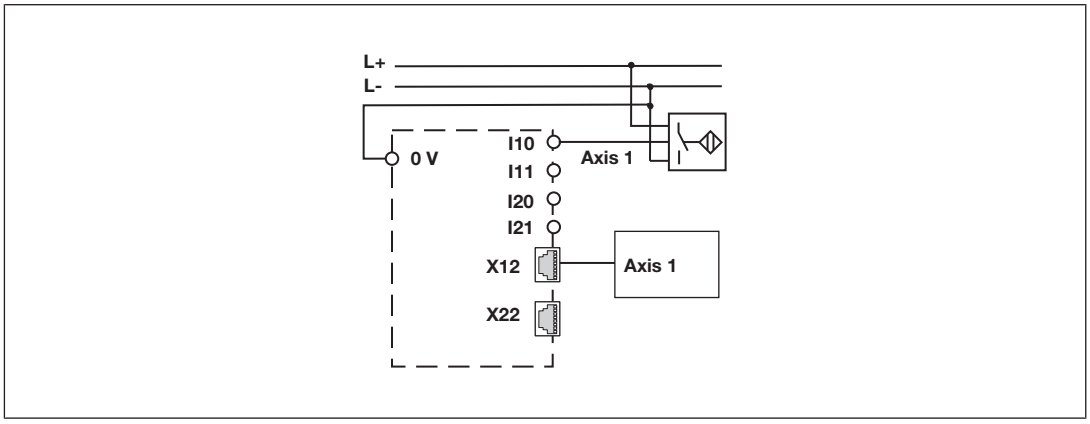

Fig.: Proximity switch and incremental encoder on one axis

Speed monitors
PNOZ ms2p TTL (Coated Version)

Connection examples

Connection of 2 proximity switches and an incremental encoder

Description

- 2 proximity switches, pnp-switching
- 1 incremental encoder

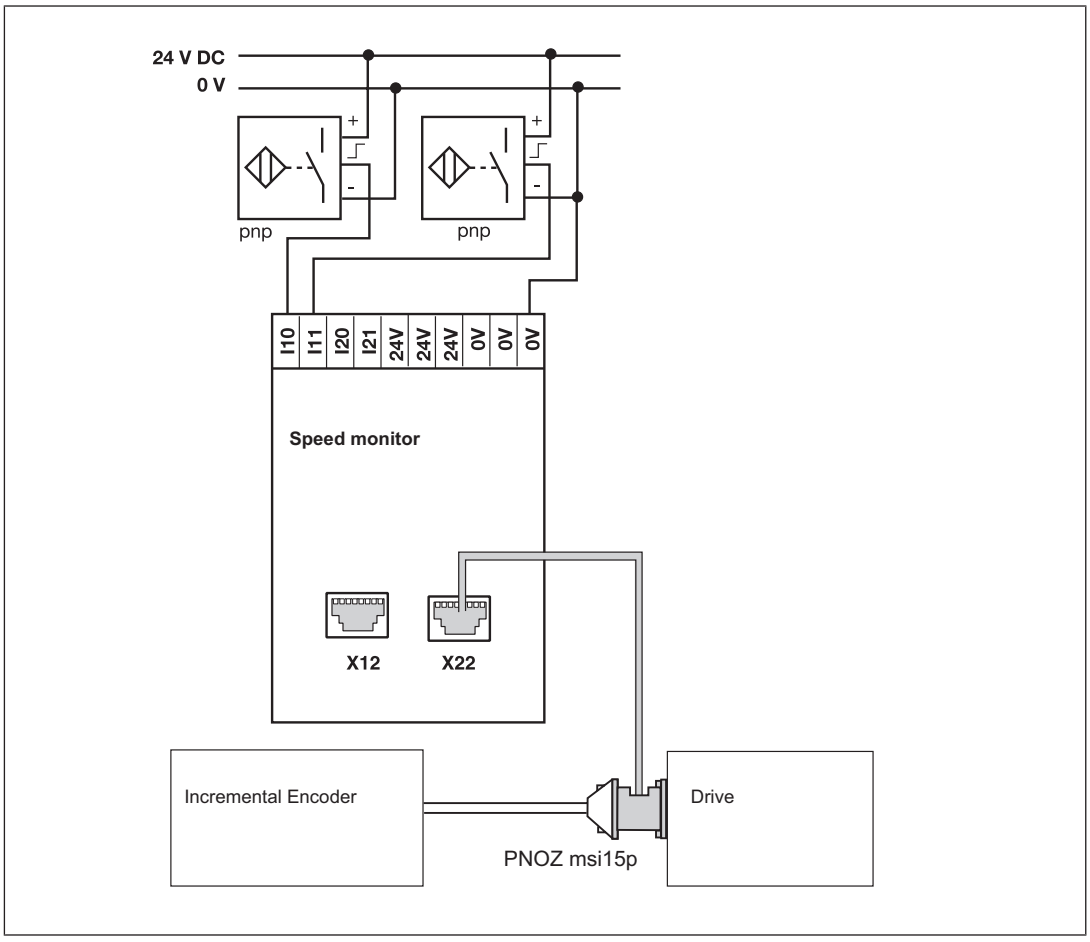

Fig.: Connection of 2 proximity switches, pnp-switching, one incremental encoder

Speed monitors
PNOZ ms2p TTL (Coated Version)

Connection of 4 proximity switches

Description

- 4 proximity switches, pnp-switching
- Connection through 24 V terminals and 0 V

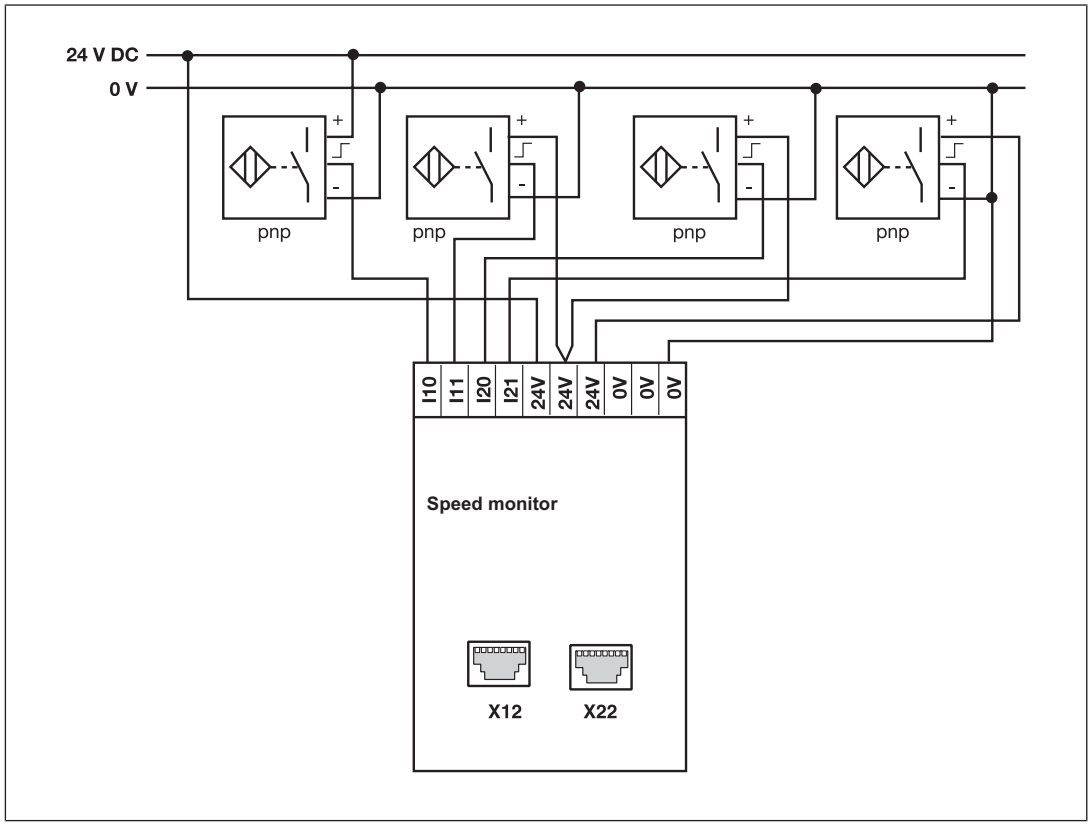

Fig.: Connection of 4 proximity switches, pnp-switching, connection through 24 V terminals and 0 V

Speed monitors
PNOZ ms2p TTL (Coated Version)

Connection of an incremental encoder and proximity switch on an axis

Description

- 1 proximity switch, pnp-switching
- 1 incremental encoder
- Incremental encoder and proximity switch on one axis

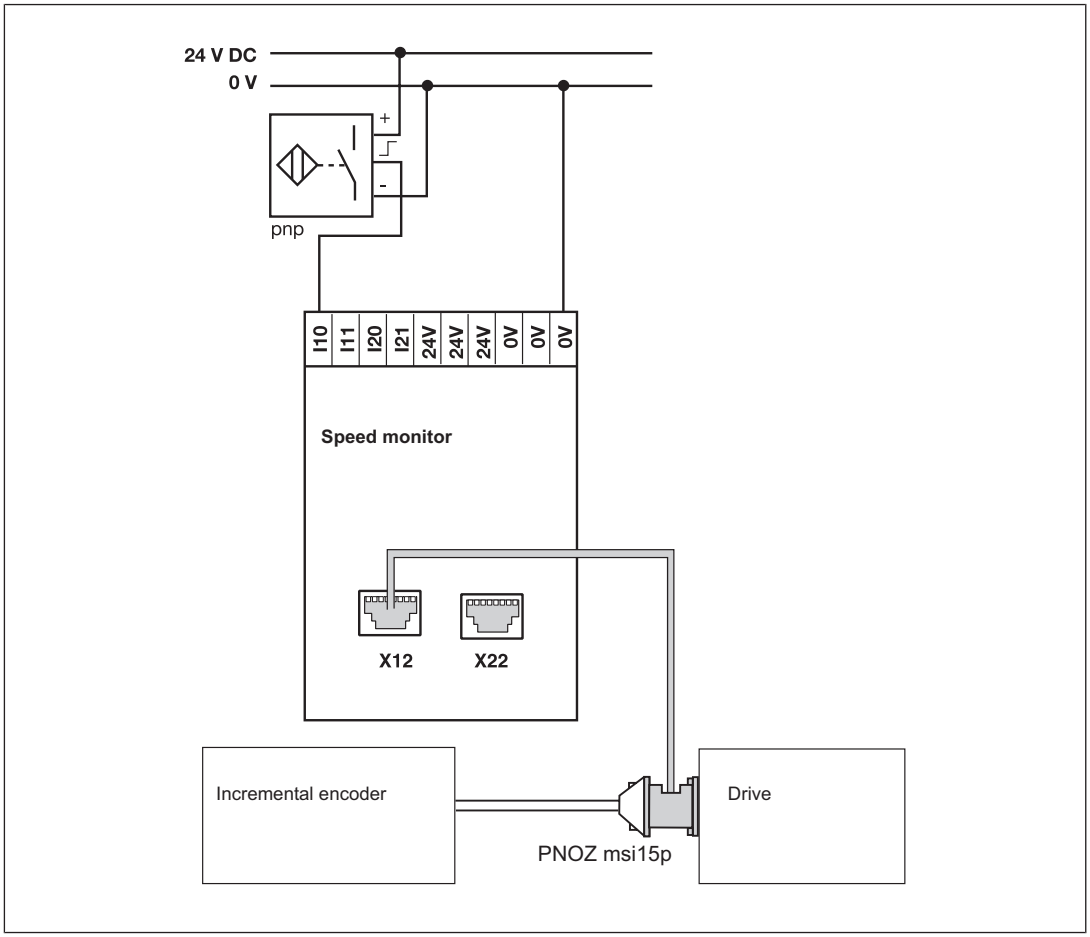

Fig.: Connection of an incremental encoder and proximity switch, pnp-switching, on an axis

Speed monitors
PNOZ ms2p TTL (Coated Version)

Technical details

General	773811	773816
Certifications	BG, CCC, CE, EAC (Eurasian), KOSHA, TÜV, cULus Listed	BG, CCC, CE, EAC (Eurasian), KOSHA, TÜV, cULus Listed
Electrical data	**773811**	**773816**
Supply voltage		
for	Module supply	Module supply
internal	Via base unit	Via base unit
Voltage	5 V	5 V
Kind	DC	DC
Voltage tolerance	-2 %/+2 %	-2 %/+2 %
Power consumption	1 W	1 W
Status indicator	LED	LED
Proximity switch input	**773811**	**773816**
Number of inputs	4	4
Input signal level		
Signal level at "1"	11 - 30 V	11 - 30 V
Signal level at "0"	-3 - 5 V	-3 - 5 V
Input resistance	3 kOhm	3 kOhm
Input's frequency range	0 - 3 kHz	0 - 3 kHz
Configurable monitoring frequency		
Without hysteresis	0,1 Hz - 3 kHz	0,1 Hz - 3 kHz
With hysteresis	0.2 Hz - 3 kHz	0.2 Hz - 3 kHz
Incremental encoder input	**773811**	**773816**
Number of inputs	2	2
Connection type	RJ45 female connector, 8-pin	RJ45 female connector, 8-pin
Input signal level	0,5 - 5 Vss	0,5 - 5 Vss
Phase position for the differential signals A, /A and B,/B	90° ±30°	90° ±30°
Overload protection	-30 - 30 V	-30 - 30 V
Input resistance	10 kOhm	10 kOhm
Input's frequency range	0 - 500 kHz	0 - 500 kHz
Configurable monitoring frequency		
Without hysteresis	0,1 Hz - 500 kHz	0,1 Hz - 500 kHz
With hysteresis	0.2 Hz - 500 kHz	0.2 Hz - 500 kHz
Times	**773811**	**773816**
Configurable switch-off delay	0 - 2.500 ms	0 - 2.500 ms
Supply interruption before de-energisation	20 ms	20 ms

Speed monitors
PNOZ ms2p TTL (Coated Version)

Times	773811	773816
Reaction time		
f>100 Hz: Configurable switch-off delay + switch-off delay of base unit	**10 ms**	**10 ms**
f<100 Hz: Configurable switch-off delay + switch-off delay of base unit	**10 ms + 1/f**	**10 ms + 1/f**
Environmental data	**773811**	**773816**
Ambient temperature		
In accordance with the standard	**EN 60068-2-14**	**EN 60068-2-14**
Temperature range	**-25 - 60 °C**	**0 - 60 °C**
Storage temperature		
In accordance with the standard	**EN 60068-2-1/-2**	**EN 60068-2-1/-2**
Temperature range	**-25 - 70 °C**	**-25 - 70 °C**
Climatic suitability		
In accordance with the standard	**EN 60068-2-30, EN 60068-2-78**	**EN 60068-2-30, EN 60068-2-78**
Humidity	**93 % r. h. at 40 °C**	**93 % r. h. at 40 °C**
Condensation during operation	**Short-term**	**Not permitted**
EMC	**EN 61131-2**	**EN 61131-2**
Vibration		
In accordance with the standard	**EN 60068-2-6**	**EN 60068-2-6**
Frequency	**5 - 500 Hz**	**10 - 150 Hz**
Acceleration	**1g**	**1g**
Broadband noise		
In accordance with the standard	**EN 60068-2-64**	–
Frequency	**5 - 500 Hz**	–
Acceleration	**1,9grms**	–
Shock stress		
In accordance with the standard	**EN 60068-2-27**	**EN 60068-2-27**
Acceleration	**15g**	**15g**
Duration	**11 ms**	**11 ms**
Max. operating height above sea level	**2000 m**	**2000 m**
Airgap creepage		
In accordance with the standard	**EN 61131-2**	**EN 61131-2**
Overvoltage category	**III**	**III**
Pollution degree	**2**	**2**
Rated insulation voltage	**30 V**	**30 V**

Speed monitors
PNOZ ms2p TTL (Coated Version)

Environmental data	773811	773816
Protection type		
In accordance with the standard	**EN 60529**	**EN 60529**
Mounting area (e.g. control cabinet)	**IP54**	**IP54**
Housing	**IP20**	**IP20**
Terminals	**IP20**	**IP20**
Mechanical data	**773811**	**773816**
Mounting position	**horizontally on mounting rail**	**horizontally on mounting rail**
DIN rail		
Top hat rail	**35 x 7,5 EN 50022**	**35 x 7,5 EN 50022**
Recess width	**27 mm**	**27 mm**
Material		
Bottom	**PPO UL 94 V0**	**PPO UL 94 V0**
Front	**ABS UL 94 V0**	**ABS UL 94 V0**
Connection type	**Spring-loaded terminal, screw terminal**	**Spring-loaded terminal, screw terminal**
Conductor cross section with screw terminals		
1 core flexible	**0,25 - 1,5 mm², 24 - 16 AWG**	**0,25 - 1,5 mm², 24 - 16 AWG**
2 core with the same cross section, flexible without crimp connectors or with TWIN crimp connectors	**0,25 - 0,75 mm², 24 - 20 AWG**	**0,25 - 0,75 mm², 24 - 20 AWG**
Torque setting with screw terminals	**0,25 Nm**	**0,25 Nm**
Stripping length with screw terminals	**7 mm**	**7 mm**
Conductor cross section with spring-loaded terminals		
1 core flexible without crimp connector	**0,25 - 1,5 mm², 24 - 16 AWG**	**0,25 - 1,5 mm², 24 - 16 AWG**
1 core flexible with crimp connector	**0,25 - 0,75 mm², 24 - 20 AWG**	**0,25 - 0,75 mm², 24 - 20 AWG**
Spring-loaded terminals: Terminal points per connection	**1**	**1**
Stripping length with spring-loaded terminals	**9 mm**	**9 mm**
Dimensions		
Height	**94 mm**	**94 mm**
Width	**45 mm**	**45 mm**
Depth	**121 mm**	**121 mm**
Weight	**220 g**	**220 g**

Where standards are undated, the 2020-07 latest editions shall apply.

Speed monitors
PNOZ ms2p TTL (Coated Version)

Safety characteristic data

Operating mode	EN ISO 13849-1: 2015 PL	EN ISO 13849-1: 2015 Category	EN IEC 62061 SIL CL	EN IEC 62061 PFH_D [1/h]	IEC 61511 SIL	IEC 61511 PFD	EN ISO 13849-1: 2015 T_M [year]
Initiator	PL e	Cat. 3	SIL CL 3	3,68E-09	SIL 3	4,84E-05	20
Incremental encoder	PL e	Cat. 3	SIL CL 3	6,73E-09	SIL 3	8,18E-05	20

All the units used within a safety function must be considered when calculating the safety characteristic data.

Order reference

Product

Product type	Features	Order No.
PNOZ ms2p TTL	Expansion module, speed monitor	773 816
PNOZ ms2p TTL coated version	Expansion module, speed monitor, coated version	773 811

Accessories

Terminator, jumper

Product type	Features	Order No.
PNOZmulti bus terminator	Terminator	779 110
PNOZmulti bus terminator coated	Terminator, coated version	779 112
KOP-XE	Jumper	774 639
KOP-XE coated	Jumper, coated version	774 640

Connection terminals

Product type	Features	Order no.
Set spring terminals	1 set of spring-loaded terminals	783 800
Set screw terminals	1 set of screw terminals	793 800

Speed monitors
PNOZ ms2p TTL (Coated Version)

Application Examples

Safe standstill monitoring

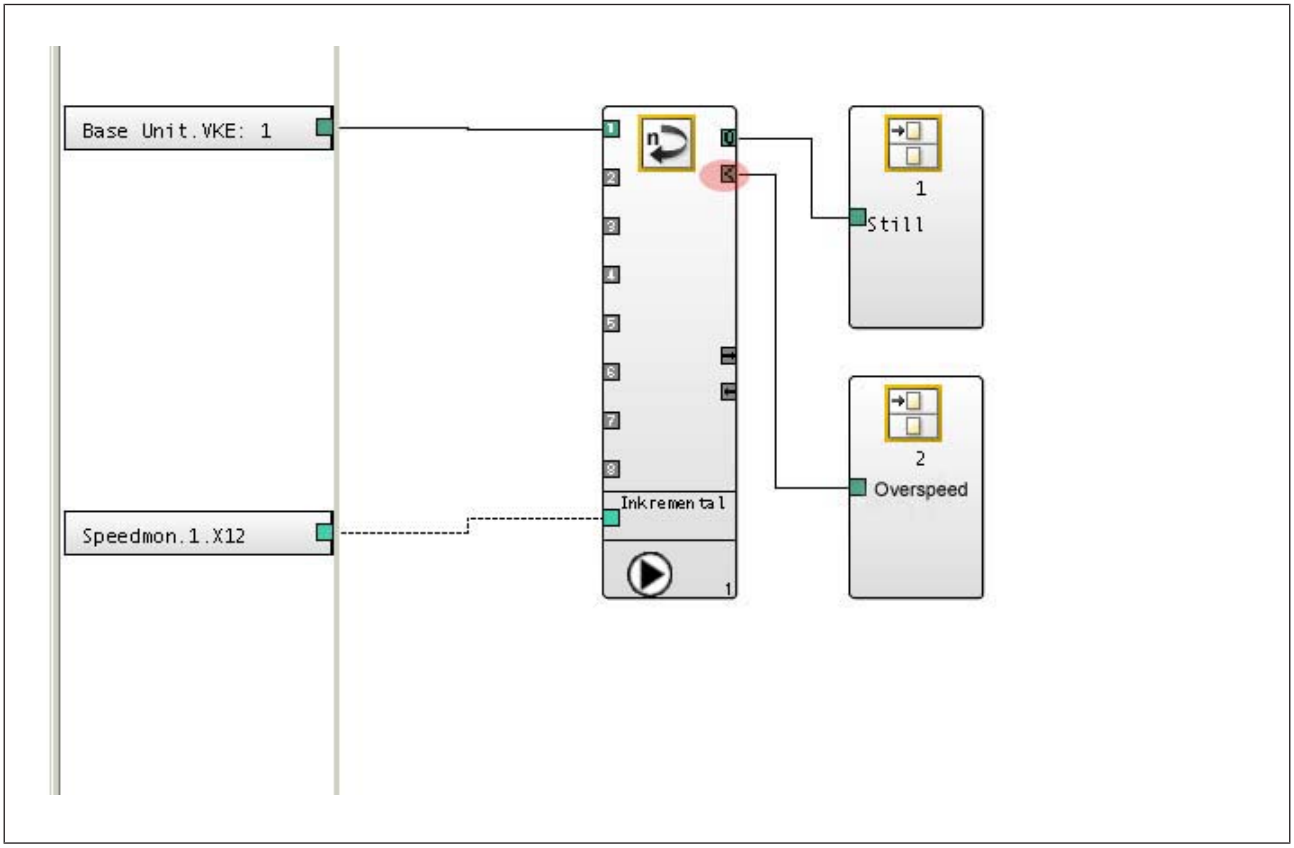

Configuration in the PNOZmulti Configurator

- Standstill: depending on requirement
- Speed n1: greater than the maximum permitted speed.

If the "Overspeed" output (see red marking) = "0", either the maximum permitted speed has been exceeded or the speed monitor has recognised a fault.
"Overspeed" output = "0" must lead to the shutdown of the relevant axis.

Speed monitors
PNOZ ms2p TTL (Coated Version)

Safe monitoring with "reduced speed" operating mode

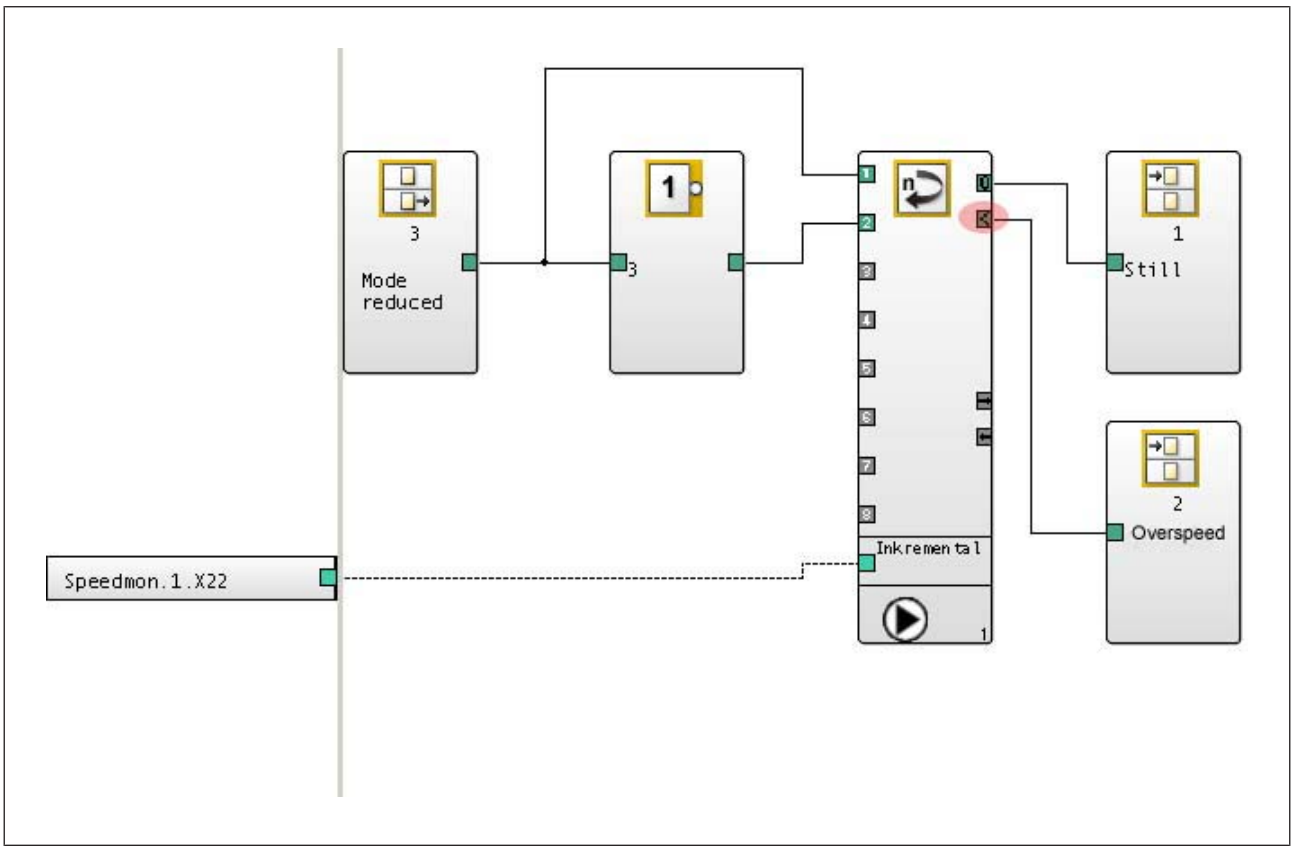

Configuration in the PNOZmulti Configurator

- Standstill: depending on requirement
- Speed n1: reduced speed, depending on requirement
- Speed n2: greater than the maximum permitted speed.

If the "Overspeed" output (see red marking) = "0", either the maximum permitted speed has been exceeded or the speed monitor has recognised a fault.
"Overspeed" output = "0" must lead to the shutdown of the relevant axis, irrespective of whether the "reduced speed" operating mode is active.

Speed monitors
PNOZ ms3p



Overview

Unit features

Application of the product PNOZ ms3p:

Speed monitor for connection to a base unit from the configurable control system PNOZmulti

The product has the following features:

- Monitoring of 2 independent axes
- Connection per axis
  - 1 incremental encoder
- Measured variables:
  - Standstill
  - Speed (8 values can be set)
  - Direction of rotation
- Axis types, start mode can be selected in the PNOZmulti Configurator
- Status indicators for
  - Supply voltage
  - Incremental encoder
  - Axis status, standstill and excess speed
  - Faults on the system
- Incremental encoder connection technology:
  RJ45 female connector
- Function to deactivate speed monitoring
- Galvanic isolation between the connections X1, X12 and X22
- Max. 4 speed monitors can be connected to the base unit

Speed monitors
PNOZ ms3p

Front view

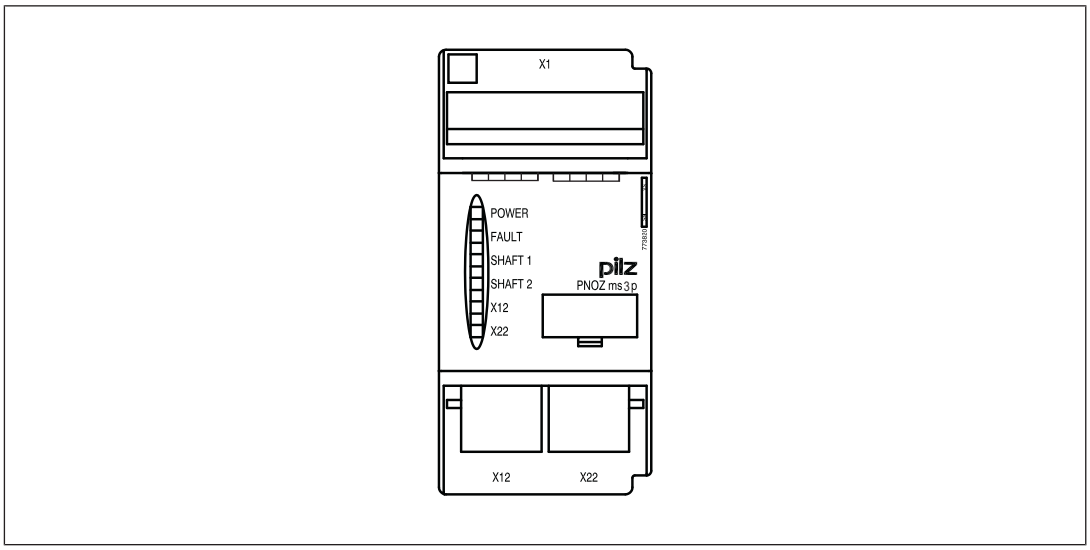

Key:

- X12:
  - Female connector for connecting an incremental encoder to axis 1
- X22:
  - Female connector for connecting an incremental encoder to axis 2
- LEDs:
  - POWER
  - FAULT
  - SHAFT 1
  - SHAFT 2
  - X12
  - X22

Function description

Operation

The speed monitor can independently monitor two axes for standstill, speed and direction of rotation. The speed monitor signals the status of the monitored values to the base unit. Depending on the implemented safety circuit, the values may be transferred from the base unit to a relay output on the safety system, for example. Incremental encoders may be used to record the values.

The configuration of the speed monitor is described in detail in the PNOZmulti Configurator's online help.

Speed monitors
PNOZ ms3p

Block diagram

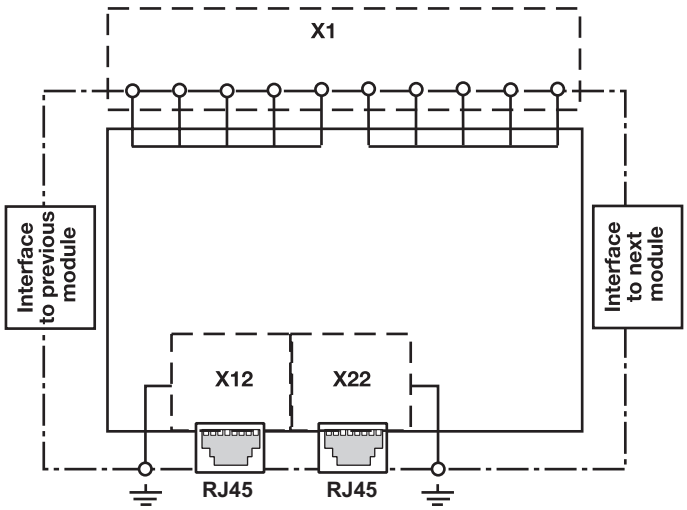

Incremental encoders

Requirements of the incremental encoders

- Only incremental encoders with a differential output of the following type are permitted
  - Sin/Cos
  - TTL (RS 422)
  - HTL (24 V)
- Please note the values stated in the technical details

Adapter for incremental encoders

The adapter records the data between the encoder and drive and makes it available to the PNOZ ms3p via the RJ45 socket.

Pilz supplies complete adapters as well as ready-made cable with RJ45 connector, which can be used when making your own adapter. The range of products in this area is constantly being expanded. Please contact us about the range of adapters that is currently available.

Speed monitors
PNOZ ms3p

Installation

Dimensions

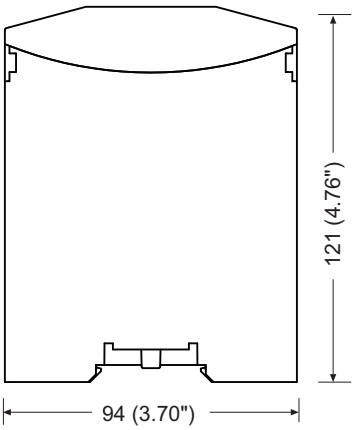

Commissioning

General wiring guidelines

The wiring is defined in the circuit diagram of the PNOZmulti Configurator.

Details of the input type, axis type and reset mode, plus the values for standstill, speed monitoring and direction of rotation are also defined in the PNOZmulti Configurator.

Please note:

- Information given in the Technical details [📖 335] must be followed.
- Use copper wiring with a temperature stability of 75 °C.

Speed monitors
PNOZ ms3p

Pin assignment of RJ45 socket

RJ45 socket 8-pin	PIN	Track
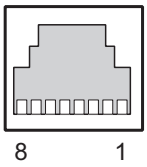	1	n.c.
	2	0 V
	3	n.c.
	4	A
	5	/A
	6	n.c.
	7	B
	8	/B

Connecting the incremental encoder

Proceed as follows when connecting the incremental encoder:

- The incremental encoder may be connected via an adapter or directly to the speed monitor.
- The incremental encoder on connector X12 monitors axis 1; the incremental encoder on connector X22 monitors axis 2.
- Use only shielded cables for all connections
- 0 V from the incremental encoder and speed monitor should always be connected.
- Position the terminating resistors of the signal lines as close as possible to the speed monitor input.

Connect the signals from the incremental encoder to the speed monitor

Encoder types: 1 Vss, 5 V-TTL

- Apply 5 V DC to incremental encoder only
- Do not terminate incremental encoder with Z_0 = 120 Ohm

Speed monitors
PNOZ ms3p

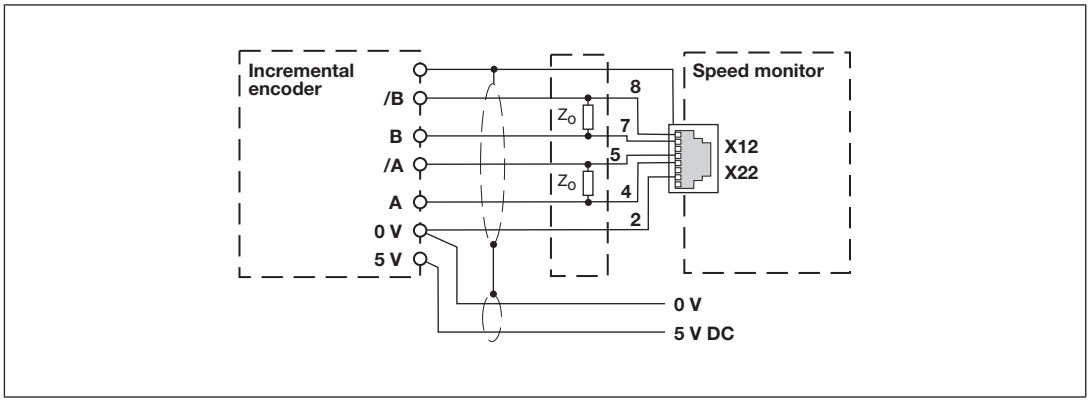

Fig.: Connection to incremental encoder type 1 Vss, 5 V-TTL

Encoder types: 24 V-HTL

- Apply 24 V DC supply voltage to incremental encoder only
- Do not terminate incremental encoder with Z0 = 120 Ohm

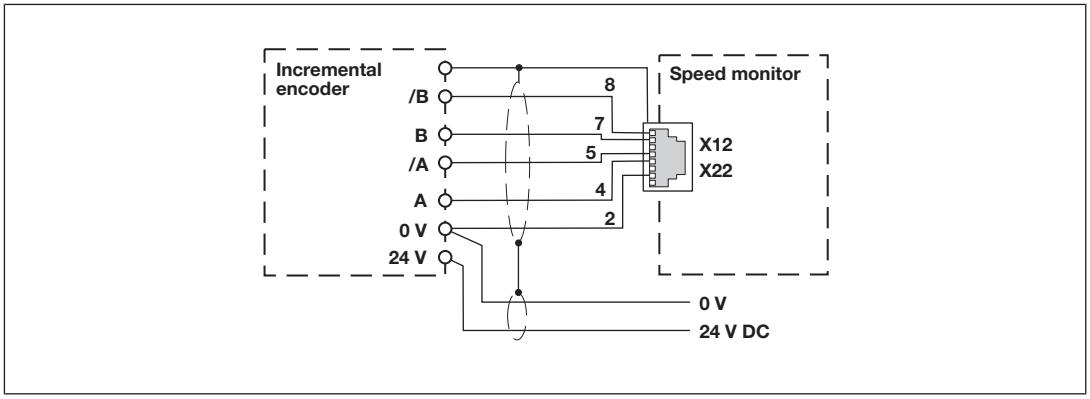

Fig.: Connection to incremental encoder type 24 V-HTL

Connect the incremental encoder to the speed monitor via an adapter

- The adapter is connected between the incremental encoder and the drive. The output on the adapter is connected to the female RJ45 connector on the speed monitor.
- The adapter can also be used without connecting to a drive. The signal lines can then be terminated directly at the adapter with Z_O = 120 Ohm.
- If the signal lines in the drive are already terminated with Z_O = 120 Ohm, the incremental encoder may no longer be terminated.
- The signals relevant for the speed monitor are utilised in parallel by the adapter. The information stated under "Connect incremental encoder signals to the speed monitor" and in the adapter operating manual must be observed when connecting the supply voltage.
- Supply only incremental encoder with 5 VDC. 24 V-HTL signals may not be terminated.

Speed monitors
PNOZ ms3p

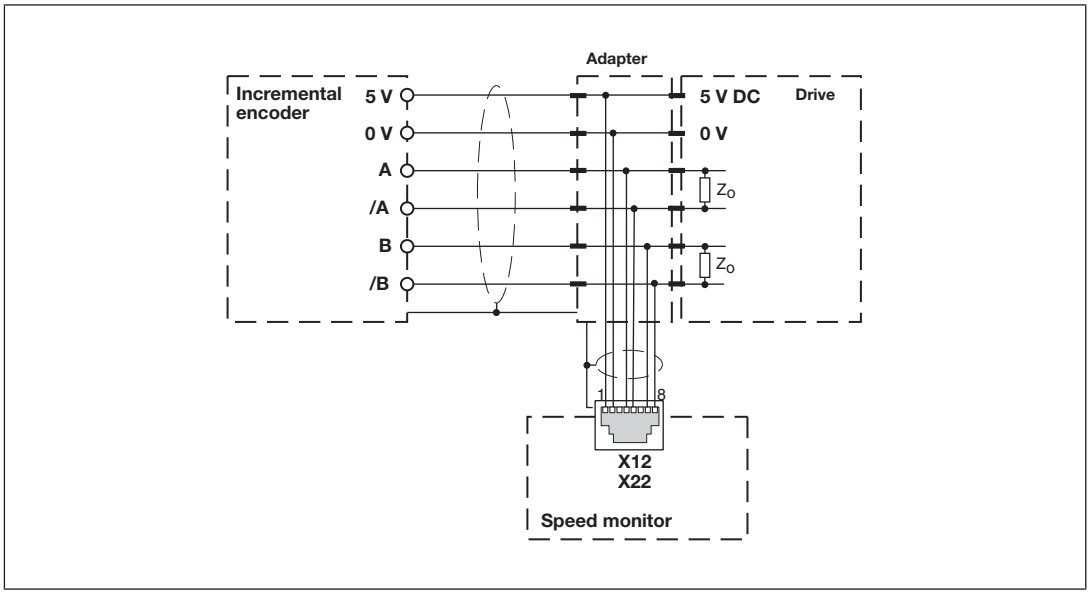

Fig.: Connection via adapter and drive

Technical details

General	
Certifications	**BG, CCC, CE, EAC (Eurasian), TÜV, cULus Listed**
Electrical data	
Supply voltage	
for	**Module supply**
internal	**Via base unit**
Voltage	**5,0 V**
Kind	**DC**
Voltage tolerance	**-2 %/+2 %**
Power consumption	**1,0 W**
Status indicator	**LED**
Incremental encoder input	
Number of inputs	**2**
Connection type	**RJ45 female connector, 8-pin**
Input signal level	**0,5 - 30,0 Vss**
Phase position for the differential signals A, /A and B,/B	**90° ±30°**
Overload protection	**-30 - 30 V**
Input resistance	**10,0 kOhm**
Input's frequency range	**0 - 500 kHz**

Speed monitors
PNOZ ms3p

Incremental encoder input	
Configurable monitoring frequency	
Without hysteresis	**0.1 Hz - 500 kHz**
With hysteresis	**0.2 Hz - 500 kHz**
Times	
Configurable switch-off delay	**0 - 2.500 ms**
Supply interruption before de-energisation	**20 ms**
Reaction time	
f>100 Hz: Configurable switch-off delay + switch-off delay of base unit	**10 ms**
f<100 Hz: Configurable switch-off delay + switch-off delay of base unit	**10 ms + 1/f**
Environmental data	
Ambient temperature	
In accordance with the standard	**EN 60068-2-14**
Temperature range	**0 - 60 °C**
Storage temperature	
In accordance with the standard	**EN 60068-2-1/-2**
Temperature range	**-25 - 70 °C**
Climatic suitability	
In accordance with the standard	**EN 60068-2-30, EN 60068-2-78**
Humidity	**93 % r. h. at 40 °C**
Condensation during operation	**Not permitted**
EMC	**EN 61131-2**
Vibration	
In accordance with the standard	**EN 60068-2-6**
Frequency	**10,0 - 150,0 Hz**
Acceleration	**1g**
Shock stress	
In accordance with the standard	**EN 60068-2-27**
Acceleration	**15g**
Duration	**11 ms**
Max. operating height above sea level	**2000 m**
Airgap creepage	
In accordance with the standard	**EN 61131-2**
Overvoltage category	**III**
Pollution degree	**2**
Rated insulation voltage	**30 V**

Speed monitors
PNOZ ms3p

Environmental data	
Protection type	
In accordance with the standard	**EN 60529**
Mounting area (e.g. control cabinet)	**IP54**
Housing	**IP20**
Terminals	**IP20**
Mechanical data	
Mounting position	**horizontally on mounting rail**
DIN rail	
Top hat rail	**35 x 7,5 EN 50022**
Recess width	**27 mm**
Material	
Bottom	**PPO UL 94 V0**
Front	**ABS UL 94 V0**
Connection type	**Spring-loaded terminal, screw terminal**
Conductor cross section with screw terminals	
1 core flexible	**0,25 - 1,50 mm², 24 - 16 AWG**
2 core with the same cross section, flexible without crimp connectors or with TWIN crimp connectors	**0,25 - 0,75 mm², 24 - 20 AWG**
Torque setting with screw terminals	**0,25 Nm**
Stripping length with screw terminals	**7 mm**
Conductor cross section with spring-loaded terminals	
1 core flexible without crimp connector	**0,25 - 1,50 mm², 24 - 16 AWG**
1 core flexible with crimp connector	**0,25 - 0,75 mm², 24 - 20 AWG**
Spring-loaded terminals: Terminal points per connection	**1**
Stripping length with spring-loaded terminals	**9 mm**
Dimensions	
Height	**94,0 mm**
Width	**45,0 mm**
Depth	**121,0 mm**
Weight	**211 g**

Where standards are undated, the 2009-10 latest editions shall apply.

Speed monitors
PNOZ ms3p

Safety characteristic data

Operating mode	EN ISO 13849-1: 2015 PL	EN ISO 13849-1: 2015 Category	EN IEC 62061 SIL CL	EN IEC 62061 PFH_D [1/h]	IEC 61511 SIL	IEC 61511 PFD	EN ISO 13849-1: 2015 T_M [year]
Incremental encoder	**PL e**	**Cat. 3**	**SIL CL 3**	**6,36E-09**	**SIL 3**	**8,45E-05**	**20**

All the units used within a safety function must be considered when calculating the safety characteristic data.

Order reference

Product

Product type	Features	Order No.
PNOZ ms3p	Expansion module, speed monitor	773 820

Accessories

Terminator, jumper

Product type	Features	Order no.
PNOZmulti bus terminator	Terminator	779 110
KOP-XE	Jumper	774 639

Connection terminals

Product type	Features	Order no.
Set spring terminals	1 set of spring-loaded terminals	783 800
Set screw terminals	1 set of screw terminals	793 800

Application examples

Examples without position control

Evaluation of bit: "Unfeasible or single-channel signal from the incremental encoder", without position control

Diagnostic bit 10: "Unfeasible or single-channel signal from the incremental encoder" must be evaluated in the user program during operation in such a way that a set bit leads to a safety-related error reaction (shutdown).

Example 1

Immediate shutdown as soon as diagnostic bit 10 is set.
The bit is evaluated as follows:

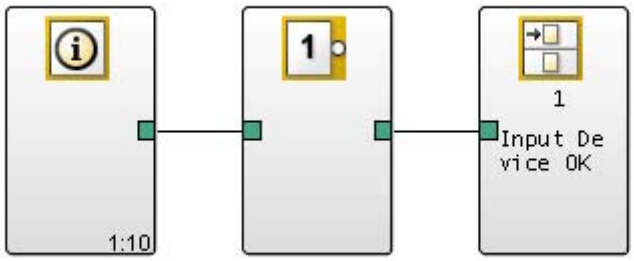

The connection point "Input Device OK" must be incorporated into the application and evaluated in such a way that a shutdown occurs if the connection point "Input Device OK"= 0.

Example 2

A set diagnostic bit 10 can be tolerated for a maximum of 4 hours (occurrence of second error). If no feasible signals above standstill frequency are measured within this time, a shutdown will occur.
In this case, the bit will be evaluated as follows:

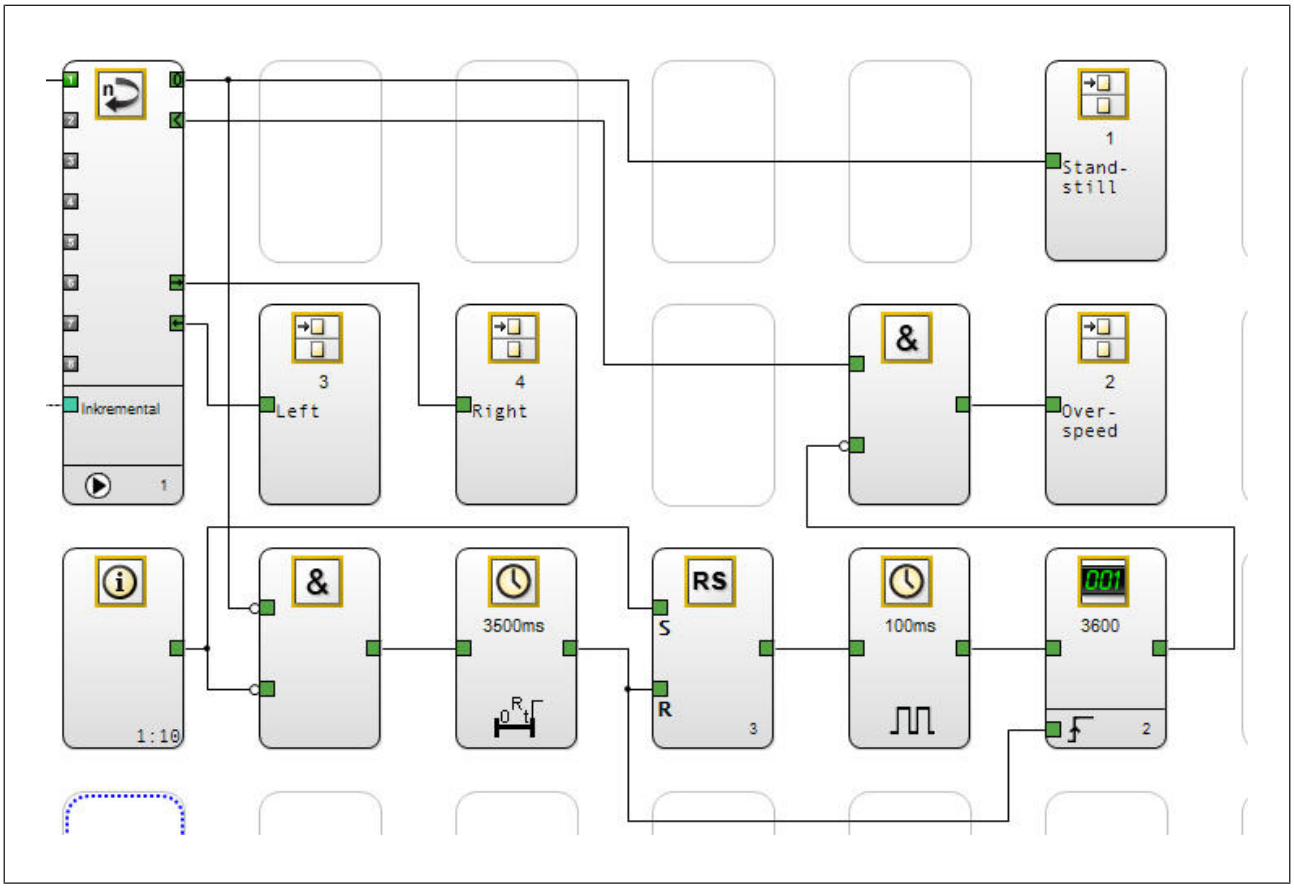

Please note that the direction of rotation must be evaluated for this example!

Speed monitors
PNOZ ms3p

Example with position control

Evaluation of bit: "Unfeasible or single-channel signal from the incremental encoder", with position control

Diagnostic bit 10: "Unfeasible or single-channel signal from the incremental encoder" may be set during position control as a result of jitter on the encoder.

The set bit can be tolerated, i.e. evaluated in the user program in such a way that a shut-down will not occur if the following conditions are met:

- An additional position control signal must be provided from an external control system (e.g. PLC) and
- The signal must have the following status conditions:
  - Position control: Signal status = 1
  - Operation: Signal status = 0

During operation, diagnostic bit 10 must be evaluated in the user program in such a way that a set bit leads to a safety-related error reaction (shutdown).

Application example:

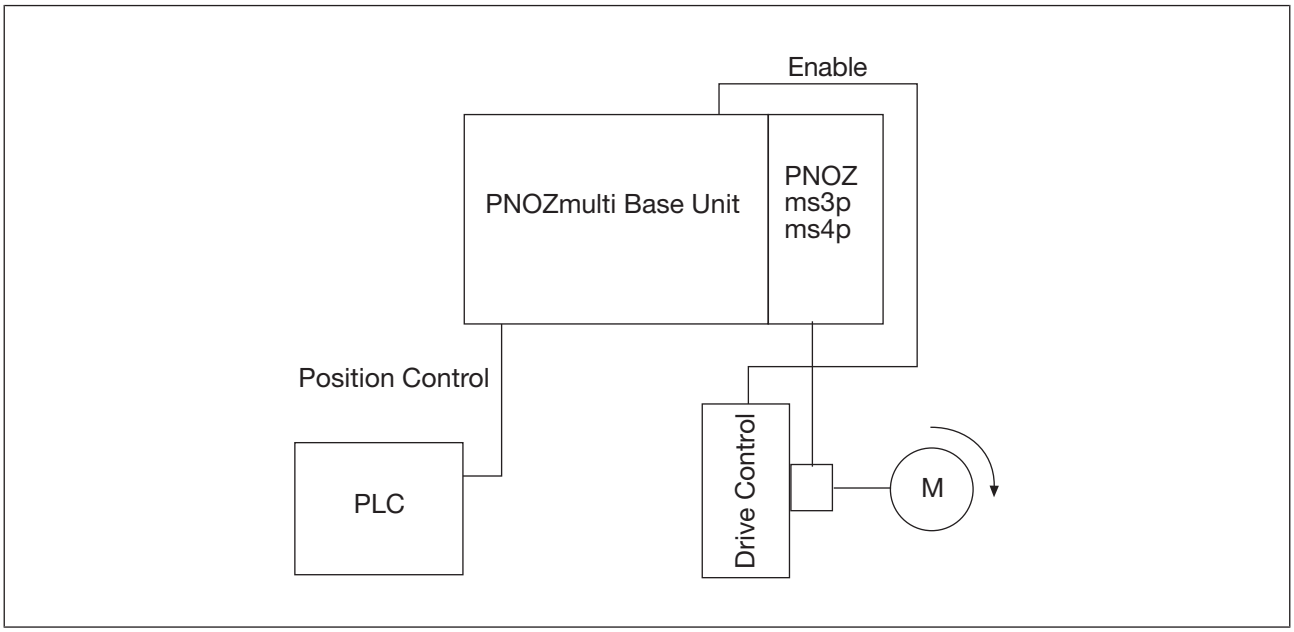

Speed monitors
PNOZ ms3p

Depending on the operating mode, evaluation of diagnostic bit 10 can be implemented in the user program as follows:

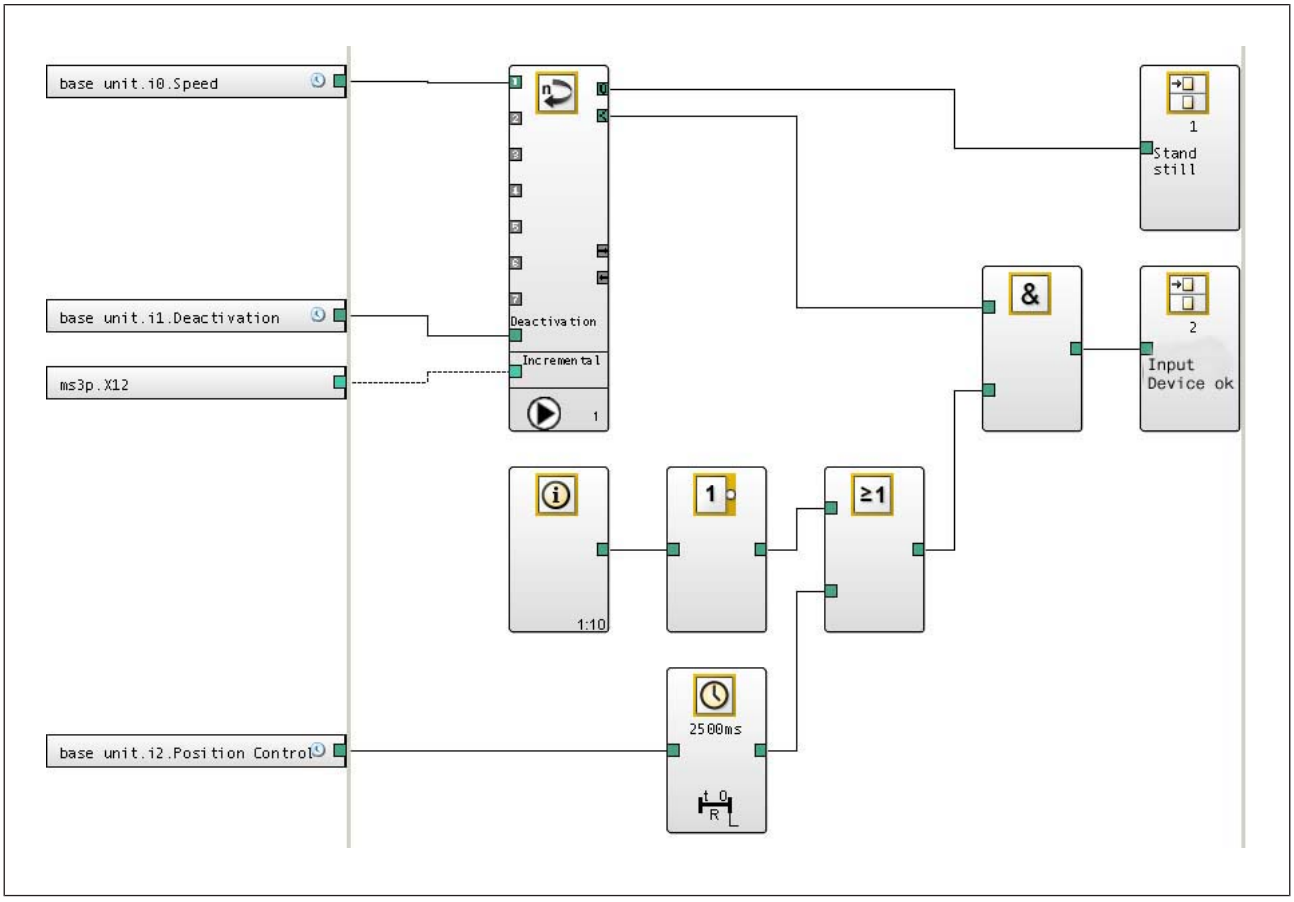

An additional "Position Control" signal is incorporated. This signal indicates whether the relevant axis is in position control (signal status = 1) or in operation (signal status = 0).

The time element with configured switch-off delay operates as a start-up suppressor, as the bit: "Unfeasible or single-channel signal from the incremental encoder" may still be present for 2 s after leaving standstill.

The connection point "Input Device OK" must be incorporated into the application and evaluated in such a way that a shutdown occurs if the connection point "Input Device OK"= 0.

Speed monitors
PNOZ ms3p HTL



Overview

Unit features

Application of the product PNOZ ms3p HTL:

Speed monitor for connection to a base unit from the configurable control system PNOZmulti

The product has the following features:

- Monitoring of 2 independent axes
- Connection per axis
  - 1 incremental encoder
- Measured variables:
  - Standstill
  - Speed (8 values can be set)
  - Direction of rotation
- Axis types, start mode can be selected in the PNOZmulti Configurator
- Status indicators for
  - Supply voltage
  - Incremental encoder
  - Axis status, standstill and excess speed
  - Faults on the system
- Incremental encoder connection technology:
  RJ45 female connector
- Function to deactivate speed monitoring
- Galvanic isolation between the connections X1, X12 and X22
- Max. 4 speed monitors can be connected to the base unit

Speed monitors
PNOZ ms3p HTL

Front view

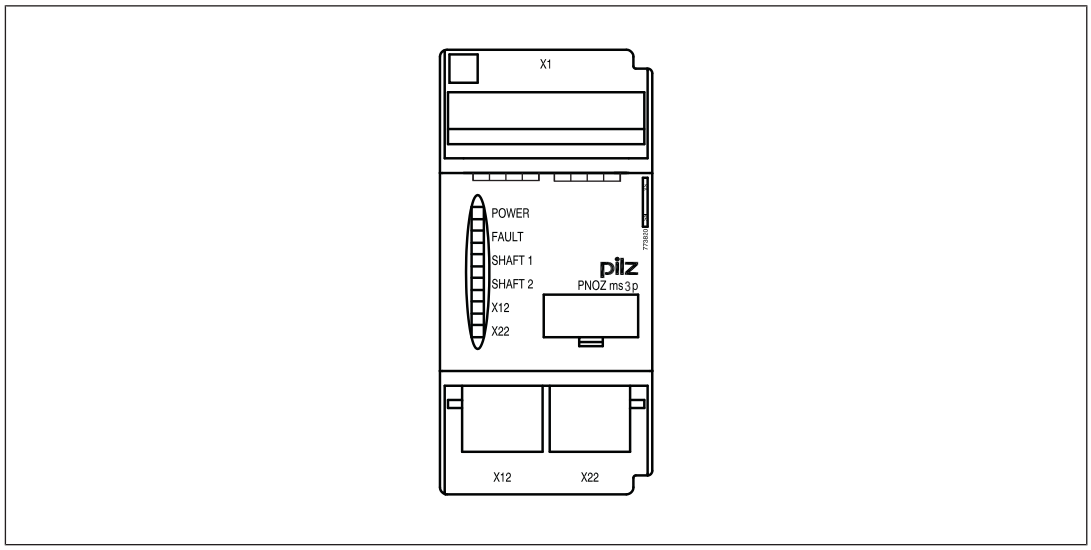

Key:

- X12:
  - Female connector for connecting an incremental encoder to axis 1
- X22:
  - Female connector for connecting an incremental encoder to axis 2
- LEDs:
  - POWER
  - FAULT
  - SHAFT 1
  - SHAFT 2
  - X12
  - X22

Function description

Operation

The speed monitor can independently monitor two axes for standstill, speed and direction of rotation. The speed monitor signals the status of the monitored values to the base unit. Depending on the implemented safety circuit, the values may be transferred from the base unit to a relay output on the safety system, for example. Incremental encoders may be used to record the values.

The configuration of the speed monitor is described in detail in the PNOZmulti Configurator's online help.

Speed monitors
PNOZ ms3p HTL

Block diagram

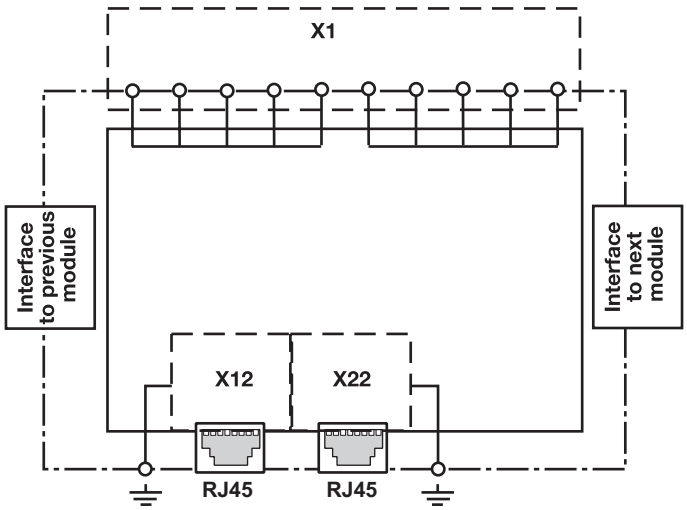

Incremental encoders

Requirements of the incremental encoders

- Only incremental encoders with a differential output of the following type are permitted
  - HTL (12 V – 30 V)
- Please note the values stated in the technical details

Adapter for incremental encoders

The adapter records the data between the encoder and drive and makes it available to the PNOZ ms3p HTL via the RJ45 socket.

Pilz supplies complete adapters as well as ready-made cable with RJ45 connector, which can be used when making your own adapter. The range of products in this area is constantly being expanded. Please contact us about the range of adapters that is currently available.

Speed monitors
PNOZ ms3p HTL

Installation

Dimensions

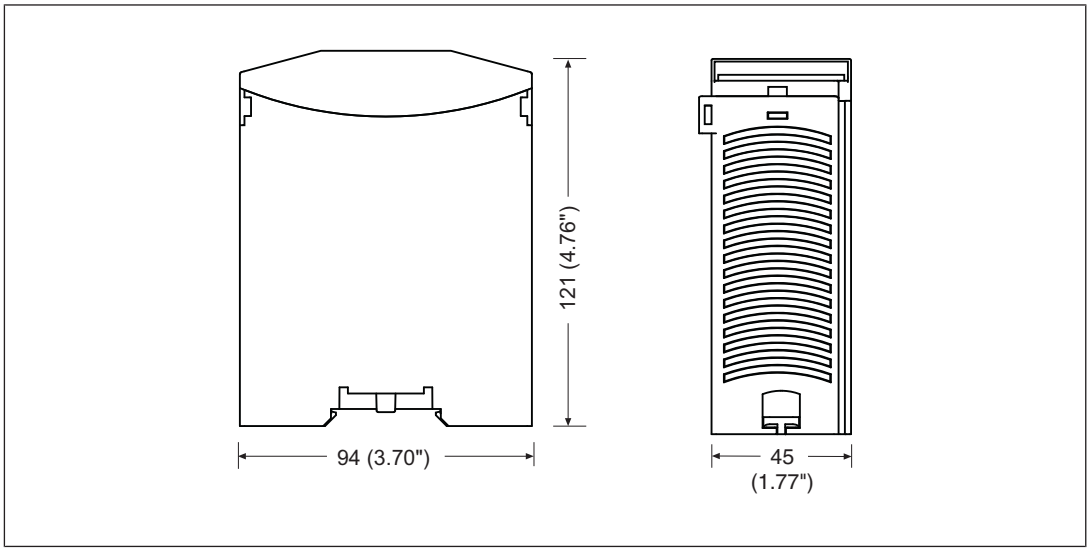

Commissioning

General wiring guidelines

The wiring is defined in the circuit diagram of the PNOZmulti Configurator.

Details of the input type, axis type and reset mode, plus the values for standstill, speed monitoring and direction of rotation are also defined in the PNOZmulti Configurator.

Please note:

- Information given in the Technical details [📖 335] must be followed.
- Use copper wiring with a temperature stability of 75 °C.

Speed monitors
PNOZ ms3p HTL

Pin assignment of RJ45 socket

RJ45 socket 8-pin	PIN	Track
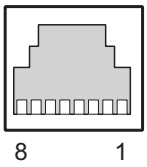	1	5 V
	2	0 V
	3	T
	4	A
	5	/A
	6	/Z
	7	B
	8	/B

Connecting the incremental encoder

Proceed as follows when connecting the incremental encoder:

- The incremental encoder may be connected via an adapter or directly to the speed monitor.
- The incremental encoder on connector X12 monitors axis 1; the incremental encoder on connector X22 monitors axis 2.
- Use only shielded cables for all connections
- 0 V from the incremental encoder and speed monitor should always be connected.
- Position the terminating resistors of the signal lines as close as possible to the speed monitor input.

Connect the signals from the incremental encoder to the speed monitor

Encoder types: 24 V-HTL

- Apply 24 VDC supply voltage to incremental encoder only
- Do not terminate incremental encoder with Z0 = 120 Ohm

Speed monitors
PNOZ ms3p HTL

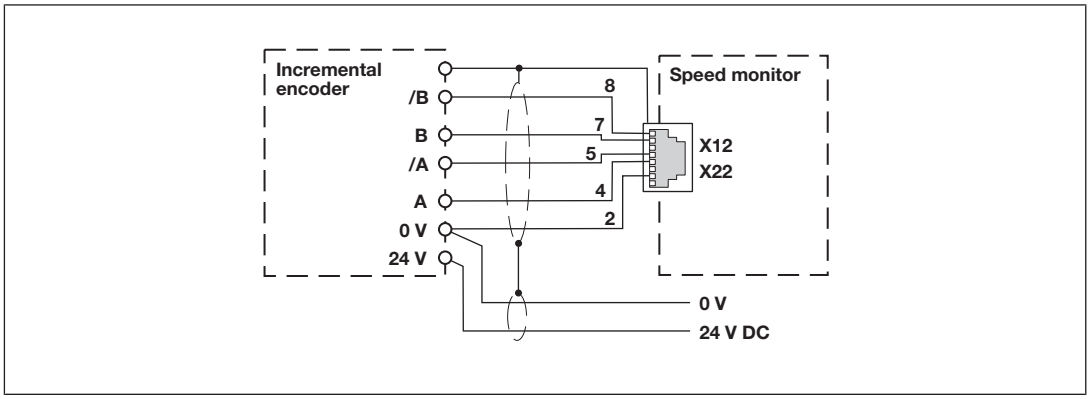

Fig.: Connection to incremental encoder type 24 V-HTL

Connect the incremental encoder to the speed monitor via an adapter

- The adapter is connected between the incremental encoder and the drive. The output on the adapter is connected to the female RJ45 connector on the speed monitor.
- The adapter can also be used without connecting to a drive.
- The signals relevant for the speed monitor are utilised in parallel by the adapter. The information stated under "Connect incremental encoder signals to the speed monitor" and in the adapter operating manual must be observed when connecting the supply voltage.
- Supply voltage (12 V – 30 V) to incremental encoder only.
- HTL signals may not be fitted with a terminating resistor.

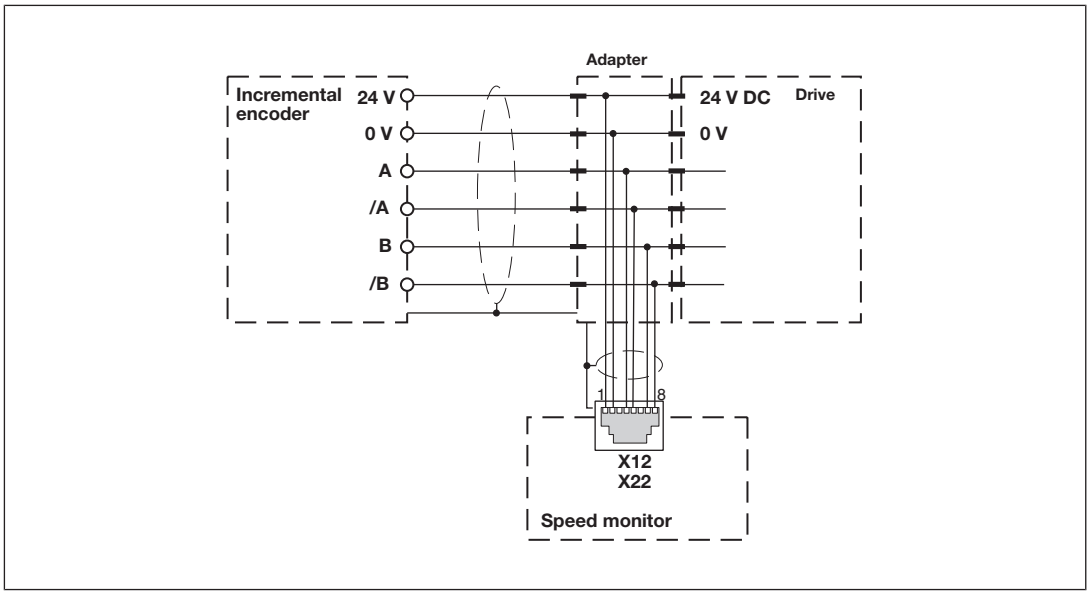

Fig.: Connection via adapter and drive

Speed monitors
PNOZ ms3p HTL

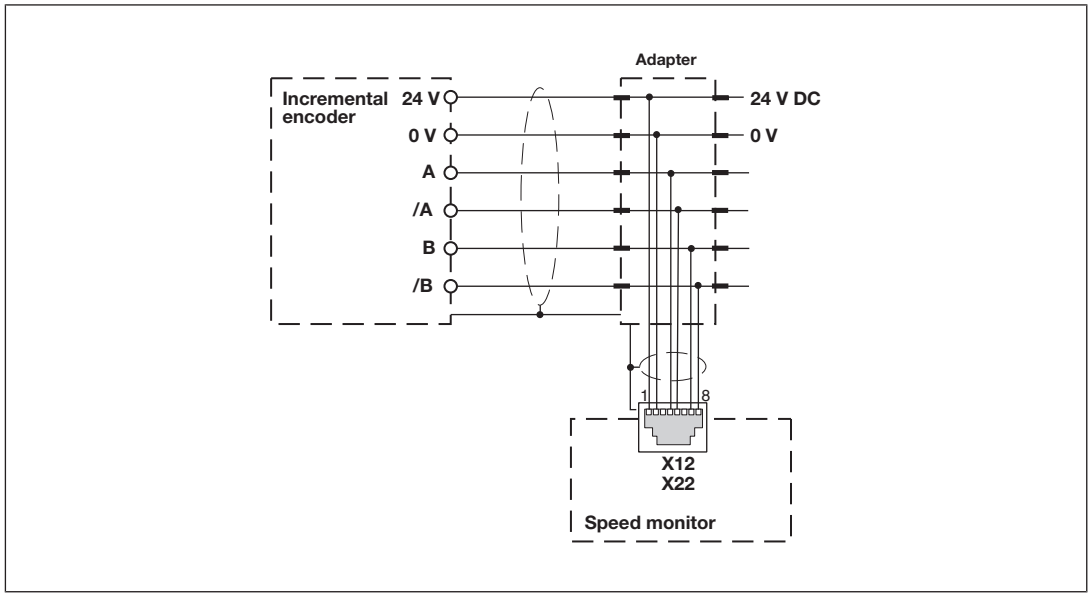

Fig.: Connection via adapter

Speed monitors
PNOZ ms3p HTL

Technical details

General	
Certifications	**BG, CCC, CE, EAC (Eurasian), TÜV, cULus Listed**
Electrical data	
Supply voltage	
for	**Module supply**
Voltage	**5 V**
Kind	**DC**
Voltage tolerance	**-2 %/+2 %**
Power consumption	**1 W**
Status indicator	**LED**
Incremental encoder input	
Number of inputs	**2**
Connection type	**RJ45 female connector, 8-pin**
Input signal level	**12 - 30 Vss**
Phase position for the differential signals A, /A and B,/B	**90° ±30°**
Overload protection	**-30 - 30 V**
Input resistance	**10 kOhm**
Input's frequency range	**0 - 200 kHz**
Configurable monitoring frequency	
Without hysteresis	**0,1 Hz - 200 kHz**
With hysteresis	**0.2 Hz - 200 kHz**
Times	
Configurable switch-off delay	**0 - 2.500 ms**
Supply interruption before de-energisation	**20 ms**
Reaction time	
f>100 Hz: Configurable switch-off delay + switch-off delay of base unit	**10 ms**
f<100 Hz: Configurable switch-off delay + switch-off delay of base unit	**10 ms + 1/f**
Environmental data	
Ambient temperature	
In accordance with the standard	**EN 60068-2-14**
Temperature range	**0 - 60 °C**
Storage temperature	
In accordance with the standard	**EN 60068-2-1/-2**
Temperature range	**-25 - 70 °C**

Speed monitors
PNOZ ms3p HTL

Environmental data	
Climatic suitability	
In accordance with the standard	**EN 60068-2-30, EN 60068-2-78**
Humidity	**93 % r. h. at 40 °C**
Condensation during operation	**Not permitted**
EMC	**EN 61131-2**
Vibration	
In accordance with the standard	**EN 60068-2-6**
Frequency	**10 - 150 Hz**
Acceleration	**1g**
Shock stress	
In accordance with the standard	**EN 60068-2-27**
Acceleration	**15g**
Duration	**11 ms**
Max. operating height above sea level	**2000 m**
Airgap creepage	
In accordance with the standard	**EN 61131-2**
Overvoltage category	**III**
Pollution degree	**2**
Rated insulation voltage	**30 V**
Protection type	
In accordance with the standard	**EN 60529**
Mounting area (e.g. control cabinet)	**IP54**
Housing	**IP20**
Terminals	**IP20**
Mechanical data	
Mounting position	**horizontally on mounting rail**
DIN rail	
Top hat rail	**35 x 7,5 EN 50022**
Recess width	**27 mm**
Material	
Bottom	**PPO UL 94 V0**
Front	**ABS UL 94 V0**
Connection type	**Spring-loaded terminal, screw terminal**
Conductor cross section with screw terminals	
1 core flexible	**0,25 - 1,5 mm², 24 - 16 AWG**
2 core with the same cross section, flexible without crimp connectors or with TWIN crimp connectors	**0,25 - 0,75 mm², 24 - 20 AWG**
Torque setting with screw terminals	**0,25 Nm**
Stripping length with screw terminals	**7 mm**

Speed monitors
PNOZ ms3p HTL

Mechanical data	
Conductor cross section with spring-loaded terminals	
1 core flexible without crimp connector	**0,25 - 1,5 mm², 24 - 16 AWG**
1 core flexible with crimp connector	**0,25 - 0,75 mm², 24 - 20 AWG**
Spring-loaded terminals: Terminal points per connection	**1**
Stripping length with spring-loaded terminals	**9 mm**
Dimensions	
Height	**94 mm**
Width	**45 mm**
Depth	**121 mm**
Weight	**211 g**

Where standards are undated, the 2020-07 latest editions shall apply.

Safety characteristic data

Operating mode	EN ISO 13849-1: 2015 PL	EN ISO 13849-1: 2015 Category	EN IEC 62061 SIL CL	EN IEC 62061 PFH_D [1/h]	IEC 61511 SIL	IEC 61511 PFD	EN ISO 13849-1: 2015 T_M [year]
Incremental encoder	**PL e**	**Cat. 3**	**SIL CL 3**	**6,36E-09**	**SIL 3**	**8,45E-05**	**20**

All the units used within a safety function must be considered when calculating the safety characteristic data.

Order reference

Product

Product type	Features	Order No.
PNOZ ms3p HTL	Expansion module, speed monitor	773 825

Accessories

Connection terminals

Product type	Features	Order no.
Set spring terminals	1 set of spring-loaded terminals	783 800
Set screw terminals	1 set of screw terminals	793 800

Terminator, jumper

Product type	Features	Order no.
PNOZmulti bus terminator	Terminator	779 110
KOP-XE	Jumper	774 639

Application examples

Examples without position control

Evaluation of bit: "Unfeasible or single-channel signal from the incremental encoder", without position control

Diagnostic bit 10: "Unfeasible or single-channel signal from the incremental encoder" must be evaluated in the user program during operation in such a way that a set bit leads to a safety-related error reaction (shutdown).

Example 1

Immediate shutdown as soon as diagnostic bit 10 is set.
The bit is evaluated as follows:

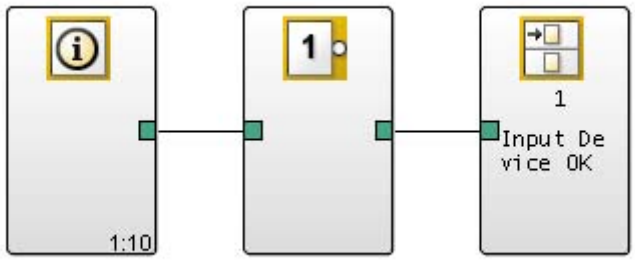

The connection point "Input Device OK" must be incorporated into the application and evaluated in such a way that a shutdown occurs if the connection point "Input Device OK"= 0.

Speed monitors
PNOZ ms3p HTL

Example 2

A set diagnostic bit 10 can be tolerated for a maximum of 4 hours (occurrence of second error). If no feasible signals above standstill frequency are measured within this time, a shutdown will occur.
In this case, the bit will be evaluated as follows:

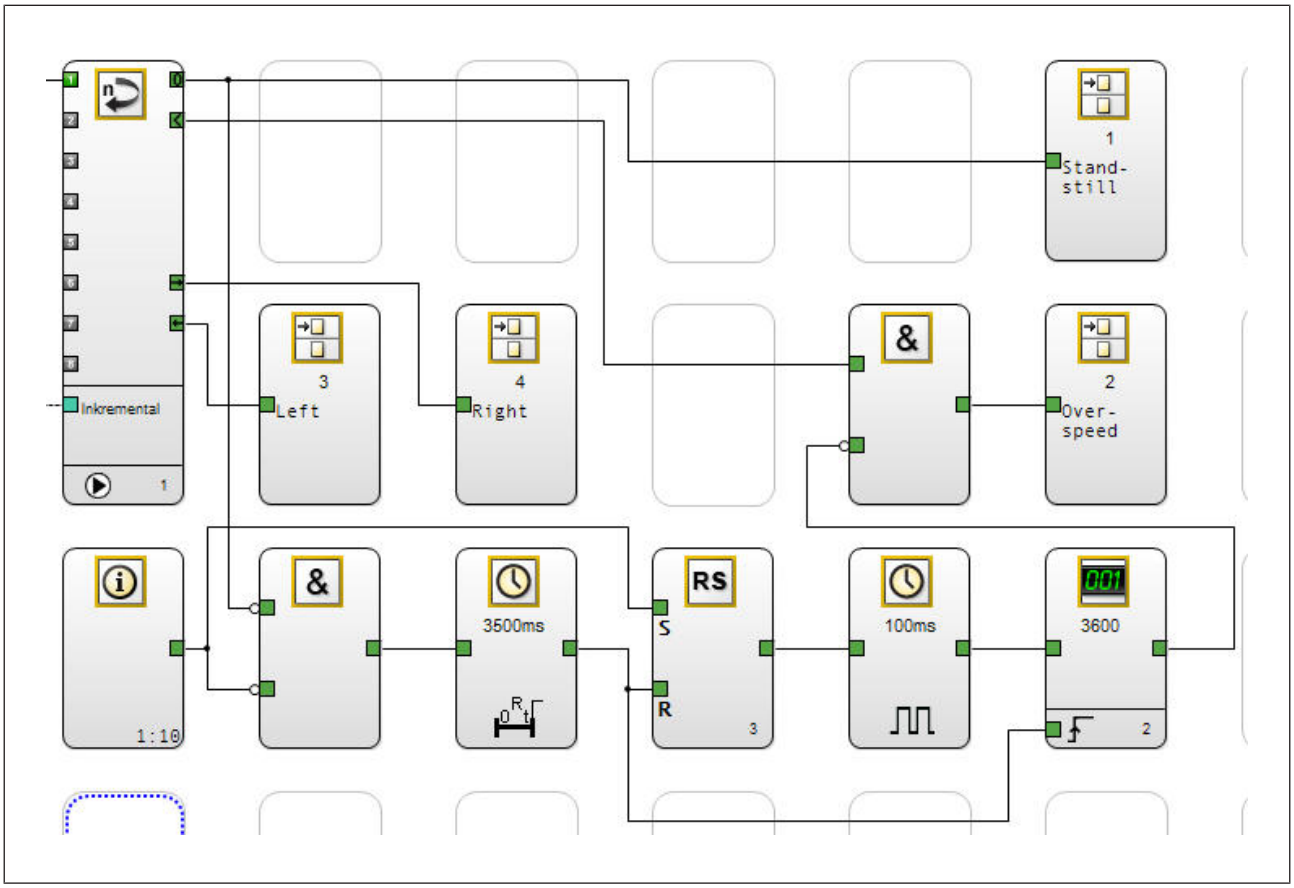

Please note that the direction of rotation must be evaluated for this example!

Speed monitors
PNOZ ms3p HTL

Example with position control

Evaluation of bit: "Unfeasible or single-channel signal from the incremental encoder", with position control

Diagnostic bit 10: "Unfeasible or single-channel signal from the incremental encoder" may be set during position control as a result of jitter on the encoder.

The set bit can be tolerated, i.e. evaluated in the user program in such a way that a shut-down will not occur if the following conditions are met:

- An additional position control signal must be provided from an external control system (e.g. PLC) and
- The signal must have the following status conditions:
  - Position control: Signal status = 1
  - Operation: Signal status = 0

During operation, diagnostic bit 10 must be evaluated in the user program in such a way that a set bit leads to a safety-related error reaction (shutdown).

Application example:

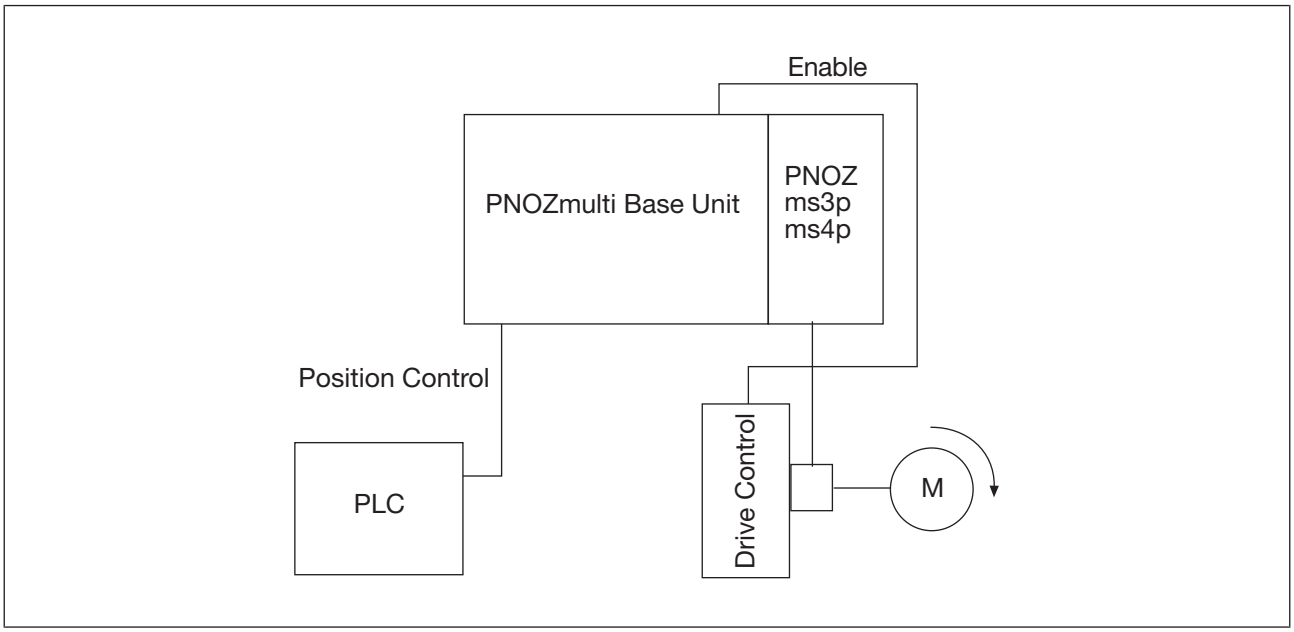

Speed monitors
PNOZ ms3p HTL

Depending on the operating mode, evaluation of diagnostic bit 10 can be implemented in the user program as follows:

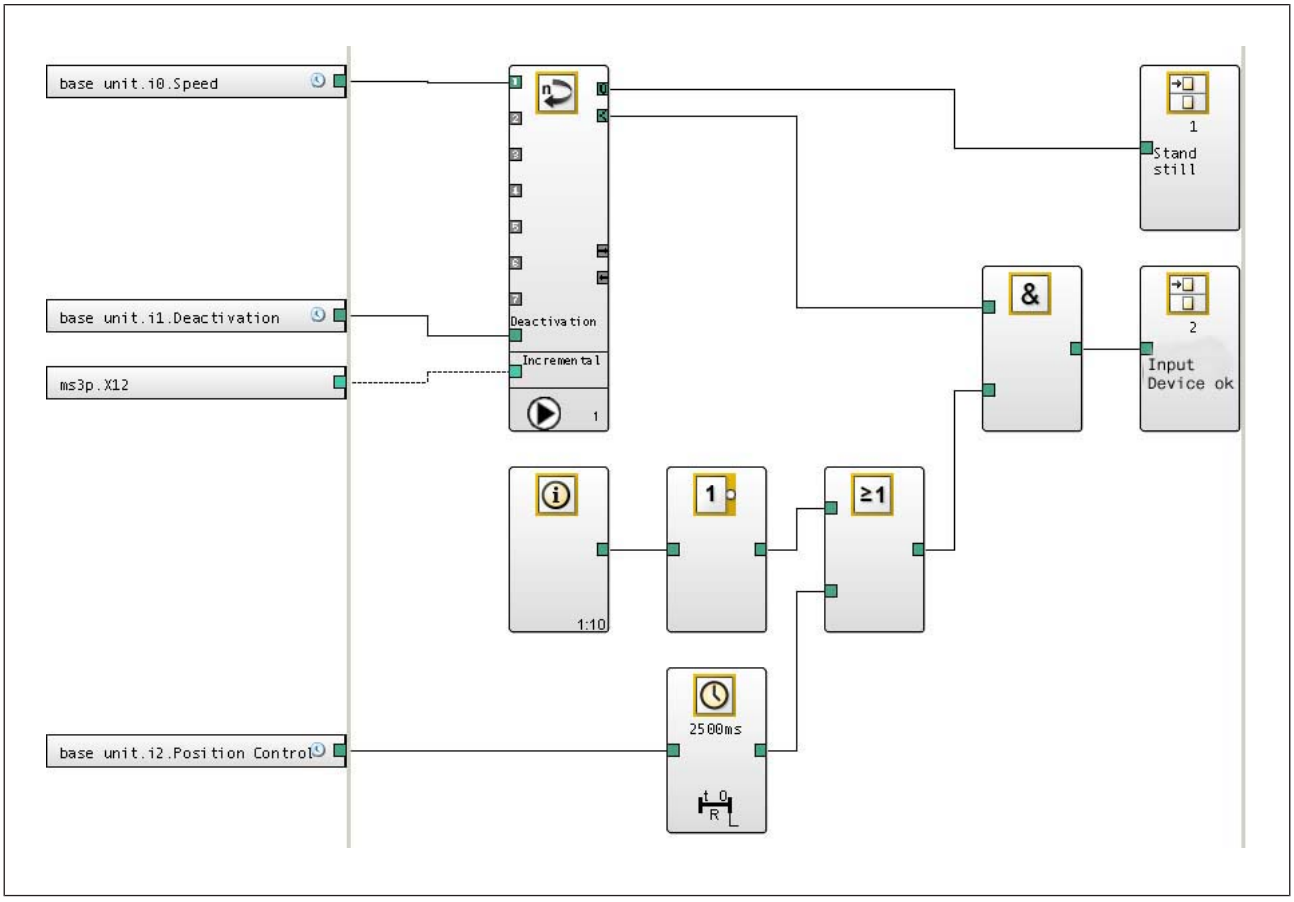

An additional "Position Control" signal is incorporated. This signal indicates whether the relevant axis is in position control (signal status = 1) or in operation (signal status = 0).

The time element with configured switch-off delay operates as a start-up suppressor, as the bit: "Unfeasible or single-channel signal from the incremental encoder" may still be present for 2 s after leaving standstill.

The connection point "Input Device OK" must be incorporated into the application and evaluated in such a way that a shutdown occurs if the connection point "Input Device OK"= 0.

Speed monitors
PNOZ ms3p TTL



Overview

Unit features

Application of the product PNOZ ms3p TTL:

Speed monitor for connection to a base unit from the configurable control system PNOZmulti

The product has the following features:

- Monitoring of 2 independent axes
- Connection per axis
  - 1 incremental encoder
- Measured variables:
  - Standstill
  - Speed (8 values can be set)
  - Direction of rotation
- Axis types, start mode can be selected in the PNOZmulti Configurator
- Status indicators for
  - Supply voltage
  - Incremental encoder
  - Axis status, standstill and excess speed
  - Faults on the system
- Incremental encoder connection technology:
  RJ45 female connector
- Function to deactivate speed monitoring
- Galvanic isolation between the connections X1, X12 and X22
- Max. 4 speed monitors can be connected to the base unit

Speed monitors
PNOZ ms3p TTL

Front view

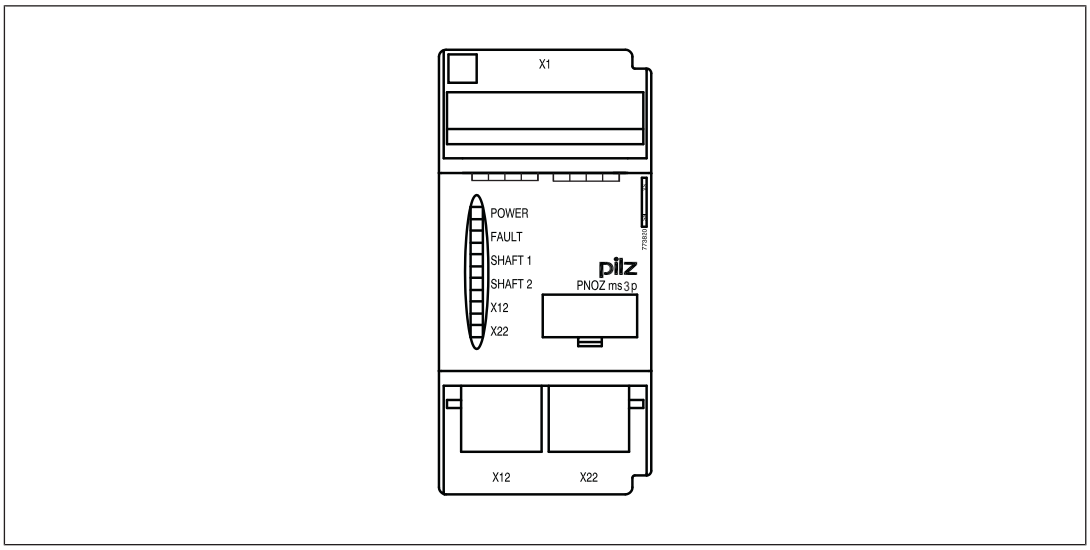

Key:

- X12:
  - Female connector for connecting an incremental encoder to axis 1
- X22:
  - Female connector for connecting an incremental encoder to axis 2
- LEDs:
  - POWER
  - FAULT
  - SHAFT 1
  - SHAFT 2
  - X12
  - X22

Function description

Operation

The speed monitor can independently monitor two axes for standstill, speed and direction of rotation. The speed monitor signals the status of the monitored values to the base unit. Depending on the implemented safety circuit, the values may be transferred from the base unit to a relay output on the safety system, for example. Incremental encoders may be used to record the values.

The configuration of the speed monitor is described in detail in the PNOZmulti Configurator's online help.

Speed monitors
PNOZ ms3p TTL

Block diagram

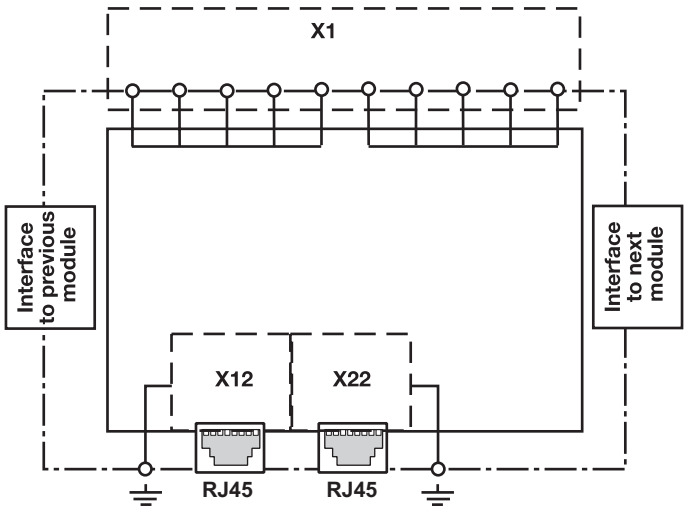

Incremental encoders

Requirements of the incremental encoders

- Only incremental encoders with a differential output of the following type are permitted
  - Sin/Cos
  - TTL (RS422)
- Please note the values stated in the technical details

Adapter for incremental encoders

The adapter records the data between the encoder and drive and makes it available to the PNOZ ms3p TTL via the RJ45 socket.

Pilz supplies complete adapters as well as ready-made cable with RJ45 connector, which can be used when making your own adapter. The range of products in this area is constantly being expanded. Please contact us about the range of adapters that is currently available.

Speed monitors
PNOZ ms3p TTL

Installation

Dimensions

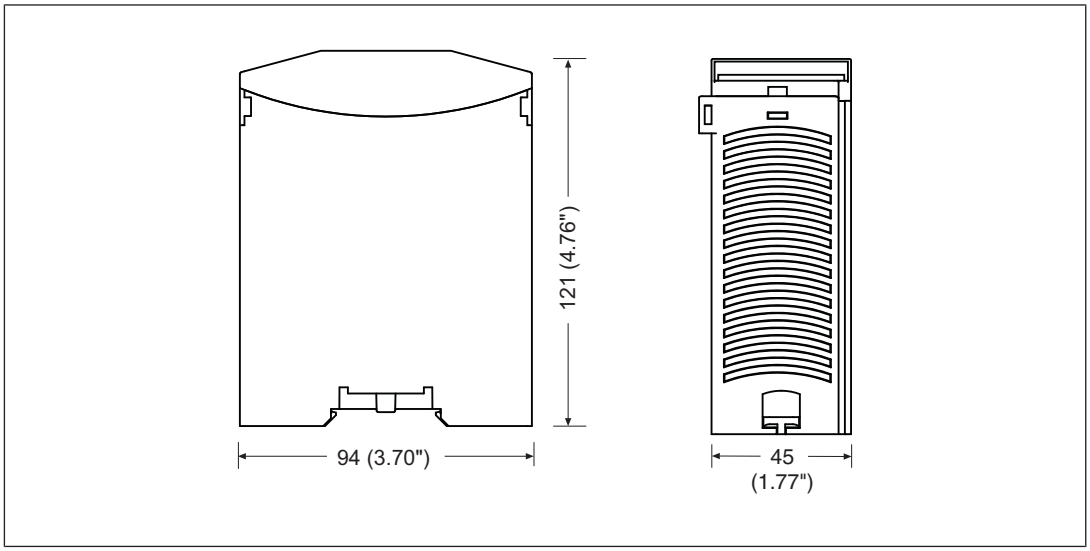

Commissioning

General wiring guidelines

The wiring is defined in the circuit diagram of the PNOZmulti Configurator.

Details of the input type, axis type and reset mode, plus the values for standstill, speed monitoring and direction of rotation are also defined in the PNOZmulti Configurator.

Please note:

- Information given in the Technical details [📖 335] must be followed.
- Use copper wiring with a temperature stability of 75 °C.

Speed monitors
PNOZ ms3p TTL

Pin assignment of RJ45 socket

RJ45 socket 8-pin	PIN	Track
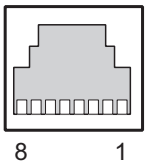	1	n.c.
	2	0 V
	3	n.c.
	4	A
	5	/A
	6	n.c.
	7	B
	8	/B

Connecting the incremental encoder

Proceed as follows when connecting the incremental encoder:

- The incremental encoder may be connected via an adapter or directly to the speed monitor.
- The incremental encoder on connector X12 monitors axis 1; the incremental encoder on connector X22 monitors axis 2.
- Use only shielded cables for all connections
- 0 V from the incremental encoder and speed monitor should always be connected.
- Position the terminating resistors of the signal lines as close as possible to the speed monitor input.

Connect the signals from the incremental encoder to the speed monitor

Encoder types: 1 Vss, 5 V-TTL

- Apply 5 VDC to incremental encoder only
- Do not terminate incremental encoder with Z_0 = 120 Ohm

Speed monitors
PNOZ ms3p TTL

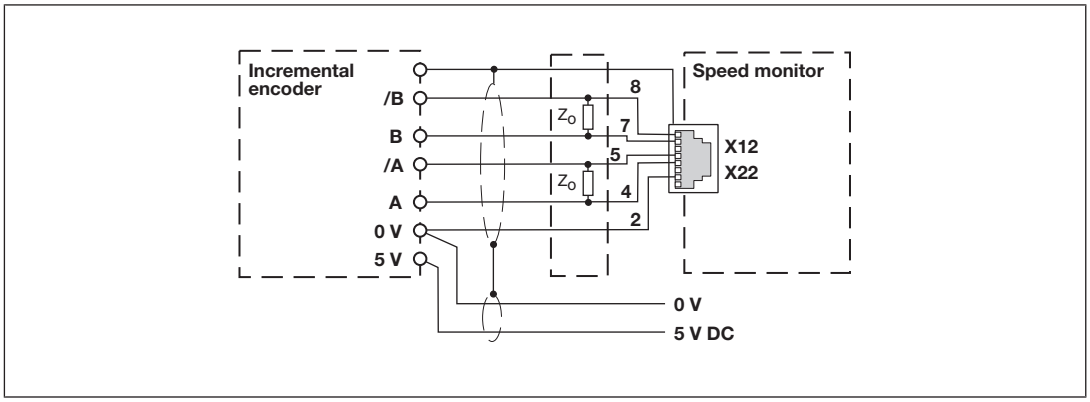

Fig.: Connection to incremental encoder type 1 Vss, 5 V-TTL

Connect the incremental encoder to the speed monitor via an adapter

- The adapter is connected between the incremental encoder and the drive. The output on the adapter is connected to the female RJ45 connector on the speed monitor.
- The adapter can also be used without connecting to a drive. The signal lines can then be terminated directly at the adapter with Z_O = 120 Ohm.
- If the signal lines in the drive are already terminated with Z_O = 120 Ohm, the incremental encoder may no longer be terminated.
- The signals relevant for the speed monitor are utilised in parallel by the adapter. The information stated under "Connect incremental encoder signals to the speed monitor" and in the adapter operating manual must be observed when connecting the supply voltage.
- Supply only incremental encoder with 5 VDC.

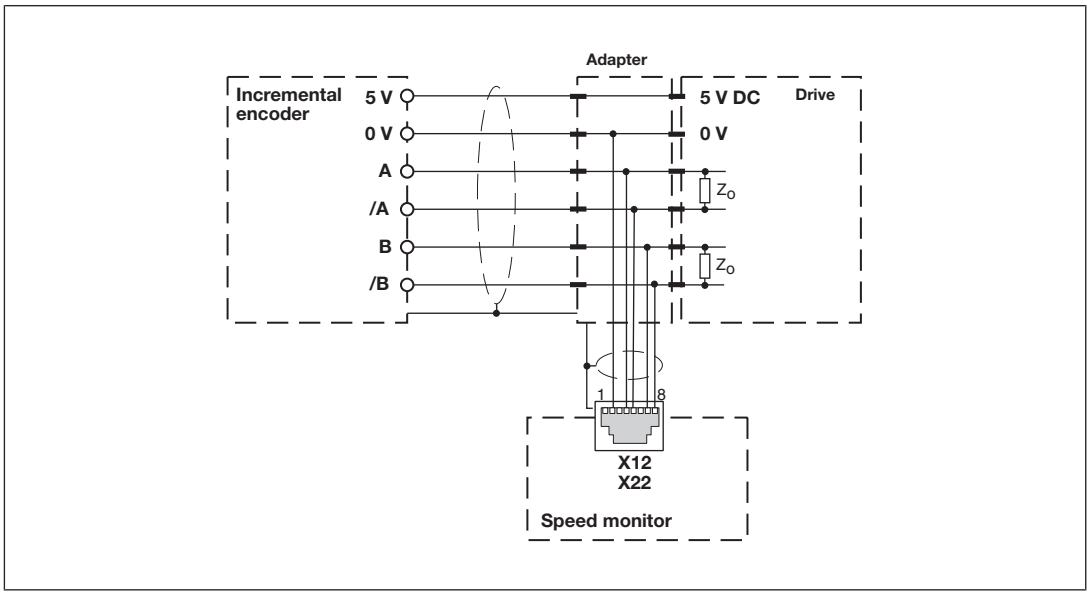

Fig.: Connection via adapter and drive

Speed monitors
PNOZ ms3p TTL

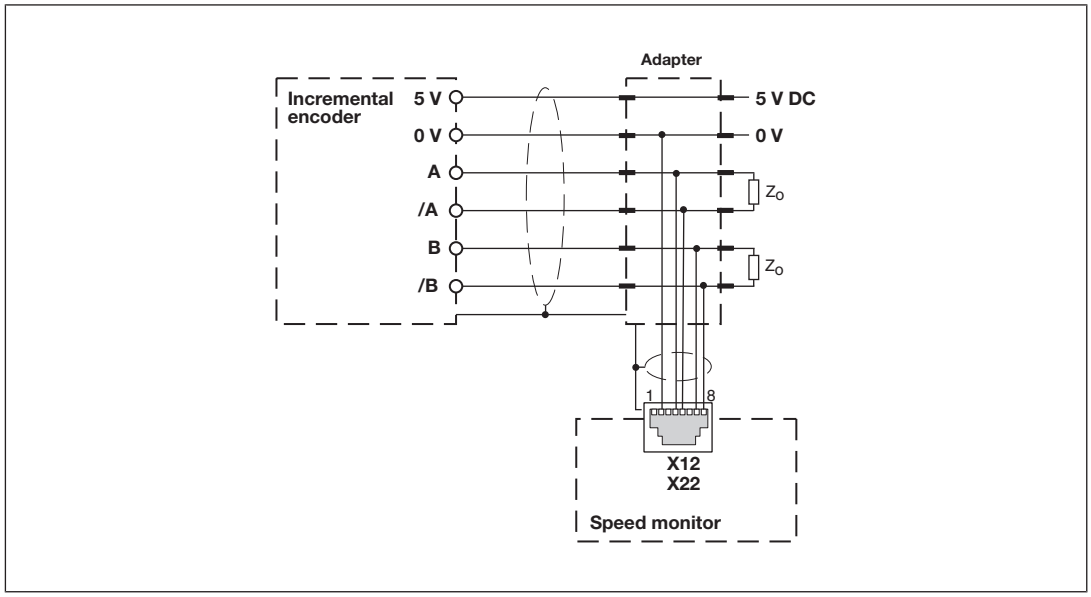

Fig.: Connection via adapter

Speed monitors
PNOZ ms3p TTL

Technical details

General	
Certifications	**BG, CCC, CE, EAC (Eurasian), TÜV, cULus Listed**
Electrical data	
Supply voltage	
for	**Module supply**
Voltage	**5 V**
Kind	**DC**
Voltage tolerance	**-2 %/+2 %**
Power consumption	**1 W**
Status indicator	**LED**
Incremental encoder input	
Number of inputs	**2**
Connection type	**RJ45 female connector, 8-pin**
Input signal level	**0,5 - 5 Vss**
Phase position for the differential signals A, /A and B,/B	**90° ±30°**
Overload protection	**-30 - 30 V**
Input resistance	**10 kOhm**
Input's frequency range	**0 - 500 kHz**
Configurable monitoring frequency	
Without hysteresis	**0,1 Hz - 500 kHz**
With hysteresis	**0.2 Hz - 500 kHz**
Times	
Configurable switch-off delay	**0 - 2.500 ms**
Supply interruption before de-energisation	**20 ms**
Reaction time	
f>100 Hz: Configurable switch-off delay + switch-off delay of base unit	**10 ms**
f<100 Hz: Configurable switch-off delay + switch-off delay of base unit	**10 ms + 1/f**
Environmental data	
Ambient temperature	
In accordance with the standard	**EN 60068-2-14**
Temperature range	**0 - 60 °C**
Storage temperature	
In accordance with the standard	**EN 60068-2-1/-2**
Temperature range	**-25 - 70 °C**

Speed monitors
PNOZ ms3p TTL

Environmental data	
Climatic suitability	
In accordance with the standard	**EN 60068-2-30, EN 60068-2-78**
Humidity	**93 % r. h. at 40 °C**
Condensation during operation	**Not permitted**
EMC	**EN 61131-2**
Vibration	
In accordance with the standard	**EN 60068-2-6**
Frequency	**10 - 150 Hz**
Acceleration	**1g**
Shock stress	
In accordance with the standard	**EN 60068-2-27**
Acceleration	**15g**
Duration	**11 ms**
Max. operating height above sea level	**2000 m**
Airgap creepage	
In accordance with the standard	**EN 61131-2**
Overvoltage category	**III**
Pollution degree	**2**
Rated insulation voltage	**30 V**
Protection type	
In accordance with the standard	**EN 60529**
Mounting area (e.g. control cabinet)	**IP54**
Housing	**IP20**
Terminals	**IP20**
Mechanical data	
Mounting position	**horizontally on mounting rail**
DIN rail	
Top hat rail	**35 x 7,5 EN 50022**
Recess width	**27 mm**
Material	
Bottom	**PPO UL 94 V0**
Front	**ABS UL 94 V0**
Connection type	**Spring-loaded terminal, screw terminal**
Conductor cross section with screw terminals	
1 core flexible	**0,25 - 1,5 mm², 24 - 16 AWG**
2 core with the same cross section, flexible without crimp connectors or with TWIN crimp connectors	**0,25 - 0,75 mm², 24 - 20 AWG**
Torque setting with screw terminals	**0,25 Nm**
Stripping length with screw terminals	**7 mm**

Speed monitors
PNOZ ms3p TTL

Mechanical data	
Conductor cross section with spring-loaded terminals	
1 core flexible without crimp connector	**0,25 - 1,5 mm², 24 - 16 AWG**
1 core flexible with crimp connector	**0,25 - 0,75 mm², 24 - 20 AWG**
Spring-loaded terminals: Terminal points per connection	**1**
Stripping length with spring-loaded terminals	**9 mm**
Dimensions	
Height	**94 mm**
Width	**45 mm**
Depth	**121 mm**
Weight	**220 g**

Where standards are undated, the 2020-07 latest editions shall apply.

Safety characteristic data

Operating mode	EN ISO 13849-1: 2015 PL	EN ISO 13849-1: 2015 Category	EN IEC 62061 SIL CL	EN IEC 62061 PFH_D [1/h]	IEC 61511 SIL	IEC 61511 PFD	EN ISO 13849-1: 2015 T_M [year]
Incremental encoder	**PL e**	**Cat. 3**	**SIL CL 3**	**6,36E-09**	**SIL 3**	**8,45E-05**	**20**

All the units used within a safety function must be considered when calculating the safety characteristic data.

Order reference

Product

Product type	Features	Order No.
PNOZ ms3p TTL	Expansion module, speed monitor	773 826

Accessories

Connection terminals

Product type	Features	Order no.
Set spring terminals	1 set of spring-loaded terminals	783 800
Set screw terminals	1 set of screw terminals	793 800

Terminator, jumper

Product type	Features	Order no.
PNOZmulti bus terminator	Terminator	779 110
KOP-XE	Jumper	774 639

Application examples

Examples without position control

Evaluation of bit: "Unfeasible or single-channel signal from the incremental encoder", without position control

Diagnostic bit 10: "Unfeasible or single-channel signal from the incremental encoder" must be evaluated in the user program during operation in such a way that a set bit leads to a safety-related error reaction (shutdown).

Example 1

Immediate shutdown as soon as diagnostic bit 10 is set.
The bit is evaluated as follows:

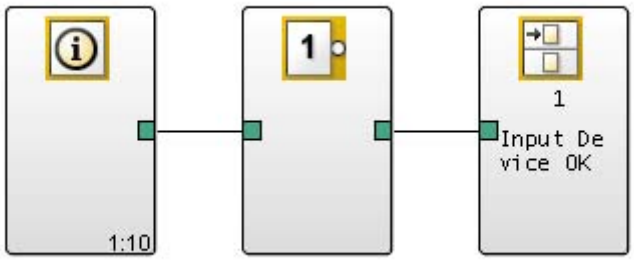

The connection point "Input Device OK" must be incorporated into the application and evaluated in such a way that a shutdown occurs if the connection point "Input Device OK"= 0.

Example 2

A set diagnostic bit 10 can be tolerated for a maximum of 4 hours (occurrence of second error). If no feasible signals above standstill frequency are measured within this time, a shutdown will occur.
In this case, the bit will be evaluated as follows:

Speed monitors
PNOZ ms3p TTL

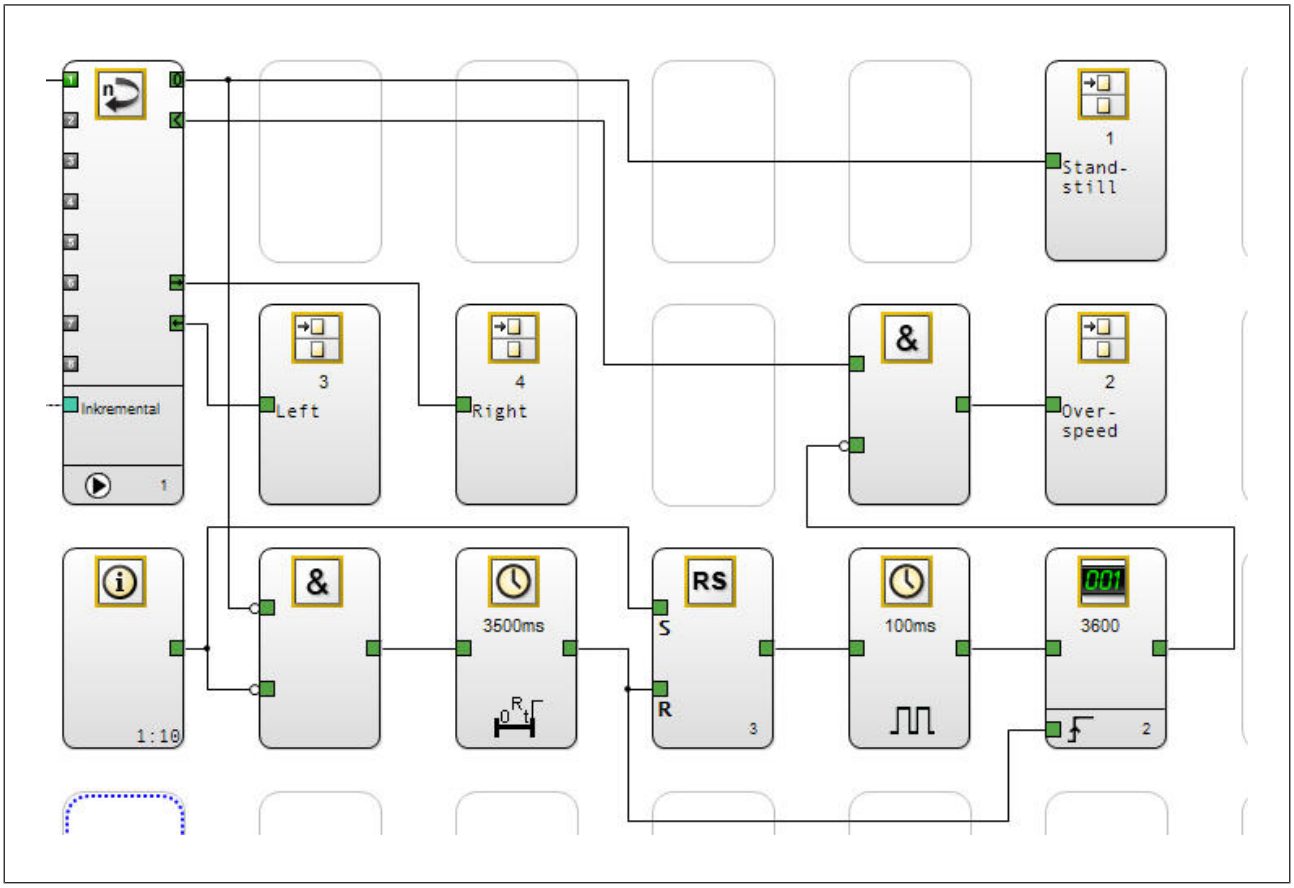

Please note that the direction of rotation must be evaluated for this example!

Speed monitors
PNOZ ms3p TTL

Example with position control

Evaluation of bit: "Unfeasible or single-channel signal from the incremental encoder", with position control

Diagnostic bit 10: "Unfeasible or single-channel signal from the incremental encoder" may be set during position control as a result of jitter on the encoder.

The set bit can be tolerated, i.e. evaluated in the user program in such a way that a shut-down will not occur if the following conditions are met:

- An additional position control signal must be provided from an external control system (e.g. PLC) and
- The signal must have the following status conditions:
  - Position control: Signal status = 1
  - Operation: Signal status = 0

During operation, diagnostic bit 10 must be evaluated in the user program in such a way that a set bit leads to a safety-related error reaction (shutdown).

Application example:

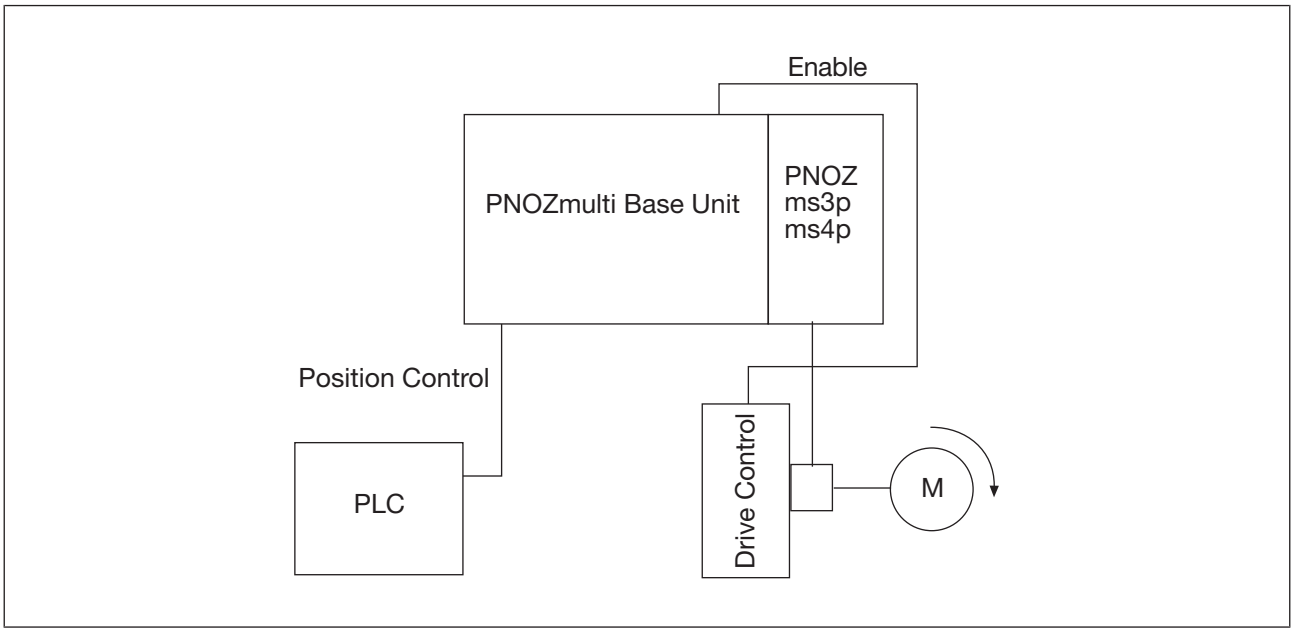

Speed monitors
PNOZ ms3p TTL

Depending on the operating mode, evaluation of diagnostic bit 10 can be implemented in the user program as follows:

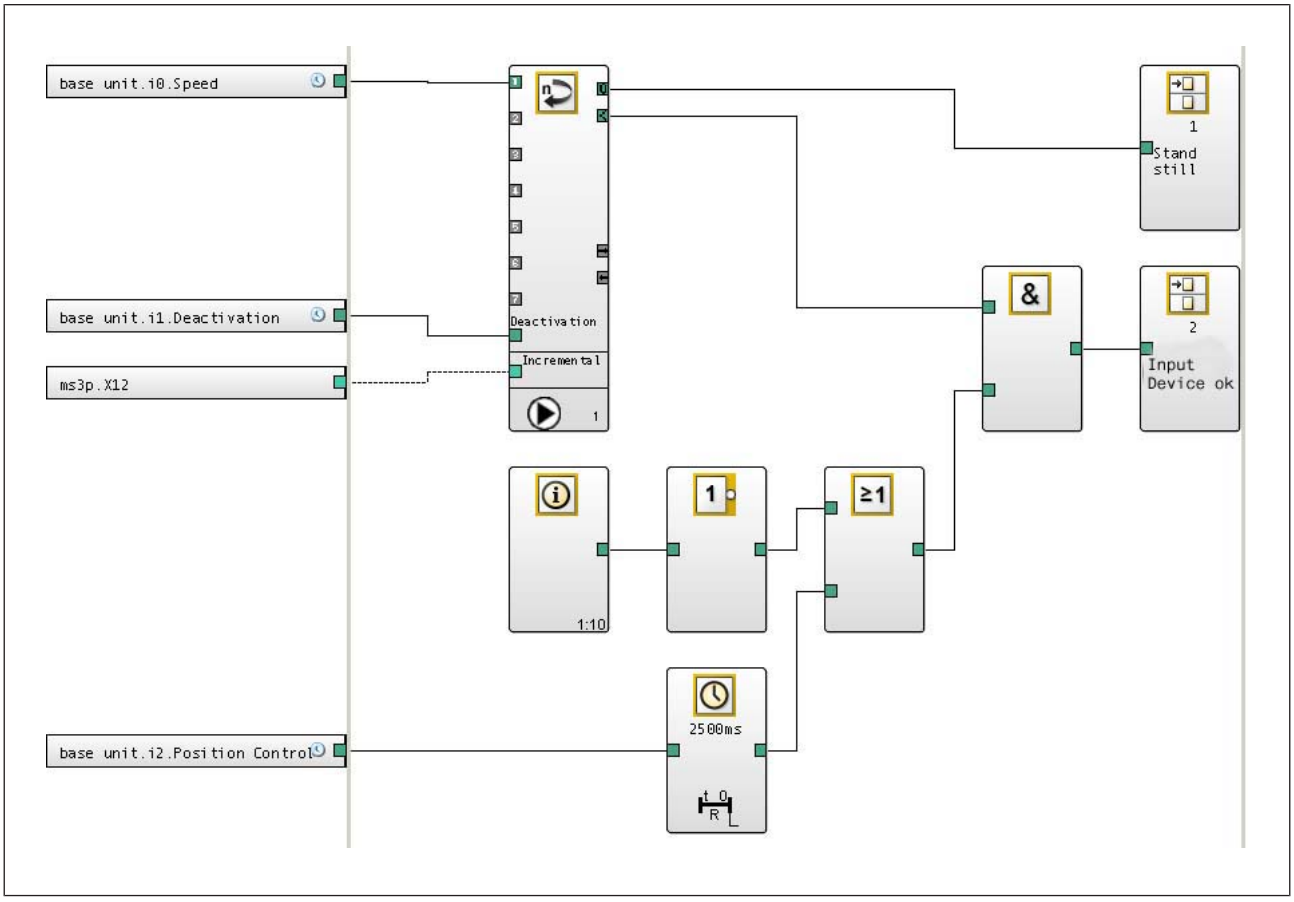

An additional "Position Control" signal is incorporated. This signal indicates whether the relevant axis is in position control (signal status = 1) or in operation (signal status = 0).

The time element with configured switch-off delay operates as a start-up suppressor, as the bit: "Unfeasible or single-channel signal from the incremental encoder" may still be present for 2 s after leaving standstill.

The connection point "Input Device OK" must be incorporated into the application and evaluated in such a way that a shutdown occurs if the connection point "Input Device OK"= 0.

Speed monitors
PNOZ ms4p



Overview

Unit features

Application of the product PNOZ ms4p:

Speed monitor for connection to a base unit from the configurable control system PNOZmulti

The product has the following features:

- Monitoring of 1 axis
- Connection: 1 incremental encoder
- Measured variables:
  - Standstill
  - Speed (16 values can be set)
  - Direction of rotation
- Axis types, start mode can be selected in the PNOZmulti Configurator
- Status indicators for
  - Supply voltage
  - Incremental encoder
  - Axis status, standstill and excess speed
  - Faults on the system
- Incremental encoder connection technology:
  RJ45 female connector
- Function to deactivate speed monitoring
- Galvanic isolation between the connections X1 and X12
- Max. 4 speed monitors can be connected to the base unit

Speed monitors
PNOZ ms4p

Front view

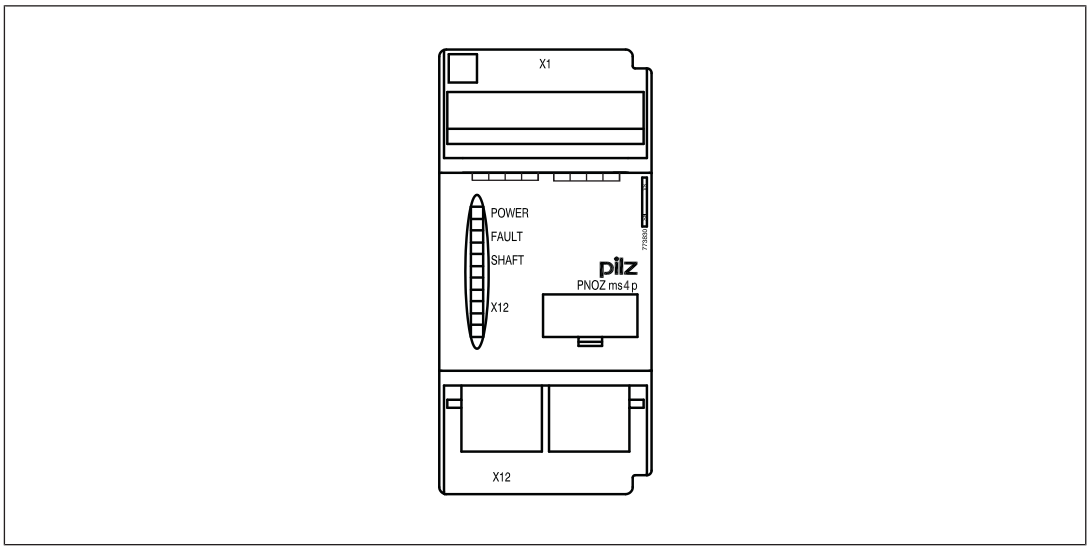

Fig.: Front view of PNOZ ms4p

Key:

- X12:
  - Female connector for connecting an incremental encoder
- LEDs:
  - POWER
  - FAULT
  - SHAFT
  - X12

Function description

Operation

The speed monitor can monitor an axis for standstill, speed and direction of rotation. The speed monitor signals the status of the monitored values to the base unit. Depending on the implemented safety circuit, the values may be transferred from the base unit to a relay output on the safety system, for example. Incremental encoders may be used to record the values.

The configuration of the speed monitor is described in detail in the PNOZmulti Configurator's online help.

Speed monitors
PNOZ ms4p

Block diagram

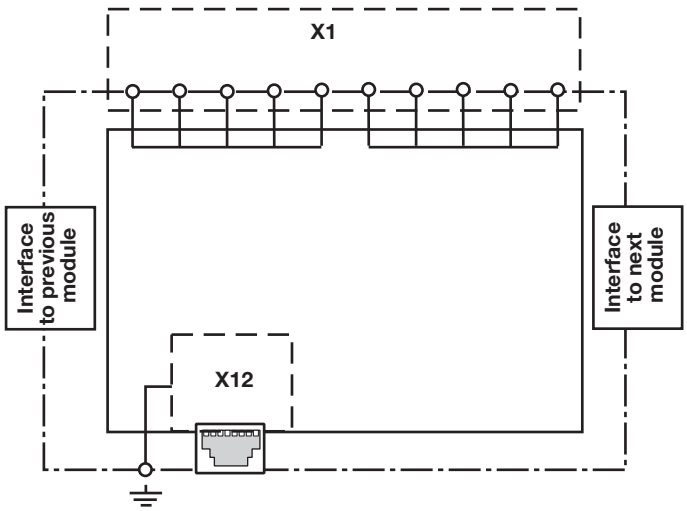

Incremental encoders

Requirements of the incremental encoders

- Only incremental encoders with a differential output of the following type are permitted
  - Sin/Cos
  - TTL (RS 422)
  - HTL (24 V)
- Please note the values stated in the technical details

Adapter for incremental encoders

The adapter records the data between the encoder and drive and makes it available to the PNOZ ms4p via the RJ45 socket.

Pilz supplies complete adapters as well as ready-made cable with RJ45 connector, which can be used when making your own adapter. The range of products in this area is constantly being expanded. Please contact us about the range of adapters that is currently available.

Speed monitors
PNOZ ms4p

Installation

Dimensions

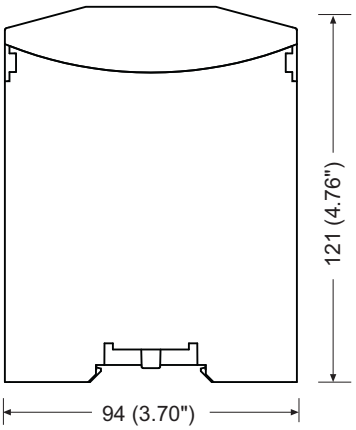

Commissioning

General wiring guidelines

The wiring is defined in the circuit diagram of the PNOZmulti Configurator.

Details of the input type, axis type and reset mode, plus the values for standstill, speed monitoring and direction of rotation are also defined in the PNOZmulti Configurator.

Please note:

- Information given in the Technical details [📖 335] must be followed.
- Use copper wiring with a temperature stability of 75 °C.

Speed monitors
PNOZ ms4p

Pin assignment of RJ45 socket

RJ45 socket 8-pin	PIN	Track
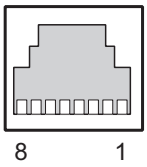	1	5 V
	2	0 V
	3	T
	4	A
	5	/A
	6	/Z
	7	B
	8	/B

Connecting the incremental encoder

Proceed as follows when connecting the incremental encoder:

- The incremental encoder may be connected via an adapter (e.g. MM A Mini-IO-CAB99) or directly to the speed monitor.
- The incremental encoder on connector X12 monitors the axis
- Use only shielded cables for all connections
- 0 V from the incremental encoder and speed monitor should always be connected.
- Position the terminating resistors of the signal lines as close as possible to the speed monitor input.

Connect the signals from the incremental encoder to the speed monitor

Encoder types: 1 Vss, 5 V-TTL

- Apply 5 V DC to incremental encoder only
- Do not terminate incremental encoder with Z_0 = 120 Ohm

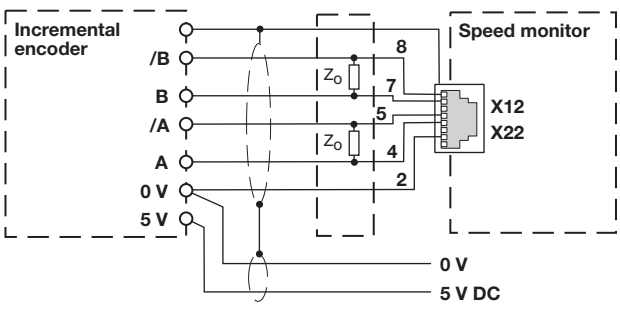

Fig.: Connection to incremental encoder type 1 Vss, 5 V-TTL

Speed monitors
PNOZ ms4p

Encoder types: 24 V-HTL

- Apply 24 V DC supply voltage to incremental encoder only
- Do not terminate incremental encoder with Z0 = 120 Ohm

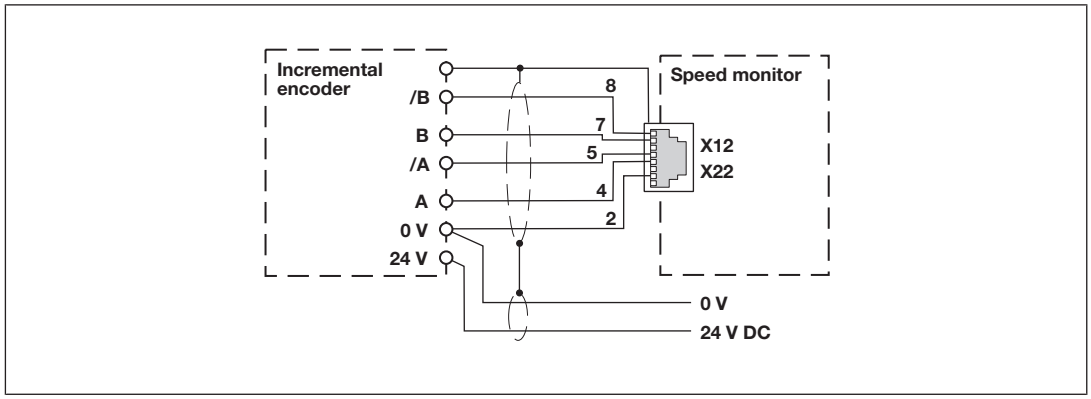

Fig.: Connection to incremental encoder type 24 V-HTL

Connect the incremental encoder to the speed monitor via an adapter

- The adapter is connected between the incremental encoder and the drive. The output on the adapter is connected to the RJ-45 female connector on the speed monitor.
- The adapter can also be used without connecting to a drive. The signal lines can then be terminated directly at the adapter with Z_O = 120 Ohm.
- If the signal lines in the drive are already terminated with Z_O = 120 Ohm, the incremental encoder may no longer be terminated.
- The signals relevant for the speed monitor are utilised in parallel by the adapter. The information stated under "Connect incremental encoder signals to the speed monitor" and in the adapter operating manual must be observed when connecting the supply voltage.
- Supply only incremental encoder with 5 V DC. 24 V-HTL signals may not be terminated.

Speed monitors
PNOZ ms4p

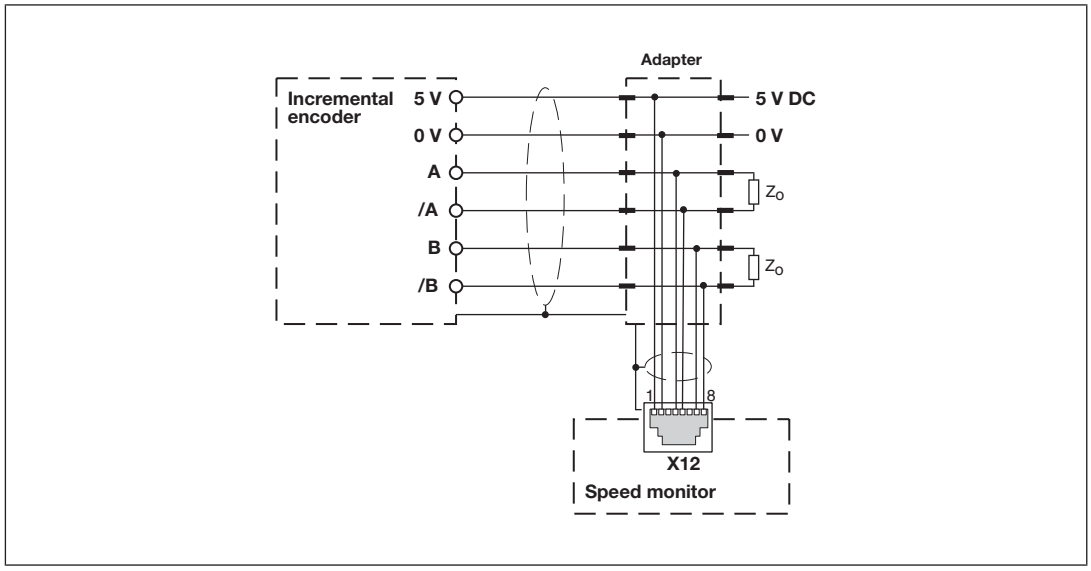

Fig.: Connection via adapter

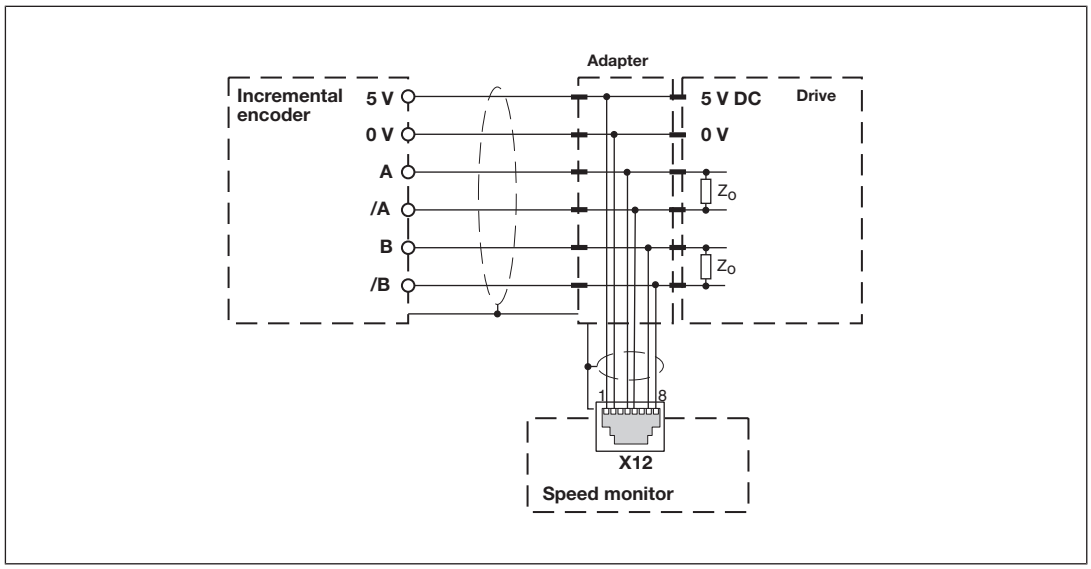

Fig.: Connection via adapter and drive

Speed monitors
PNOZ ms4p

Technical details

General	
Certifications	**BG, CCC, CE, EAC (Eurasian), TÜV, cULus Listed**
Electrical data	
Supply voltage	
for	**Module supply**
Voltage	**5 V**
Kind	**DC**
Voltage tolerance	**-2 %/+2 %**
Power consumption	**1 W**
Status indicator	**LED**
Incremental encoder input	
Number of inputs	**1**
Connection type	**RJ45 female connector, 8-pin**
Input signal level	**0,5 - 30 Vss**
Phase position for the differential signals A, /A and B,/B	**90° ±30°**
Overload protection	**-30 - 30 V**
Input resistance	**10 kOhm**
Input's frequency range	**0 - 500 kHz**
Configurable monitoring frequency	
Without hysteresis	**0,1 Hz - 500 kHz**
With hysteresis	**0.2 Hz - 500 kHz**
Times	
Configurable switch-off delay	**0 - 2.500 ms**
Supply interruption before de-energisation	**20 ms**
Reaction time	
f>100 Hz: Configurable switch-off delay + switch-off delay of base unit	**10 ms**
f<100 Hz: Configurable switch-off delay + switch-off delay of base unit	**10 ms + 1/f**
Environmental data	
Ambient temperature	
In accordance with the standard	**EN 60068-2-14**
Temperature range	**0 - 60 °C**
Storage temperature	
In accordance with the standard	**EN 60068-2-1/-2**
Temperature range	**-25 - 70 °C**

Speed monitors
PNOZ ms4p

Environmental data	
Climatic suitability	
In accordance with the standard	**EN 60068-2-30, EN 60068-2-78**
Humidity	**93 % r. h. at 40 °C**
Condensation during operation	**Not permitted**
EMC	**EN 61131-2**
Vibration	
In accordance with the standard	**EN 60068-2-6**
Frequency	**10 - 150 Hz**
Acceleration	**1g**
Shock stress	
In accordance with the standard	**EN 60068-2-27**
Acceleration	**15g**
Duration	**11 ms**
Max. operating height above sea level	**2000 m**
Airgap creepage	
In accordance with the standard	**EN 61131-2**
Overvoltage category	**III**
Pollution degree	**2**
Rated insulation voltage	**30 V**
Protection type	
In accordance with the standard	**EN 60529**
Mounting area (e.g. control cabinet)	**IP54**
Housing	**IP20**
Terminals	**IP20**
Mechanical data	
Mounting position	**horizontally on mounting rail**
DIN rail	
Top hat rail	**35 x 7,5 EN 50022**
Recess width	**27 mm**
Material	
Bottom	**PPO UL 94 V0**
Front	**ABS UL 94 V0**
Connection type	**Spring-loaded terminal, screw terminal**
Conductor cross section with screw terminals	
1 core flexible	**0,25 - 1,5 mm², 24 - 16 AWG**
2 core with the same cross section, flexible without crimp connectors or with TWIN crimp connectors	**0,25 - 0,75 mm², 24 - 20 AWG**
Torque setting with screw terminals	**0,25 Nm**
Stripping length with screw terminals	**7 mm**

Speed monitors
PNOZ ms4p

Mechanical data	
Conductor cross section with spring-loaded terminals	
1 core flexible without crimp connector	**0,25 - 1,5 mm², 24 - 16 AWG**
1 core flexible with crimp connector	**0,25 - 0,75 mm², 24 - 20 AWG**
Spring-loaded terminals: Terminal points per connection	**1**
Stripping length with spring-loaded terminals	**9 mm**
Dimensions	
Height	**94 mm**
Width	**45 mm**
Depth	**121 mm**
Weight	**203 g**

Where standards are undated, the 2020-07 latest editions shall apply.

Safety characteristic data

Operating mode	EN ISO 13849-1: 2015 PL	EN ISO 13849-1: 2015 Category	EN IEC 62061 SIL CL	EN IEC 62061 PFH_D [1/h]	IEC 61511 SIL	IEC 61511 PFD	EN ISO 13849-1: 2015 T_M [year]
Incremental encoder	**PL e**	**Cat. 3**	**SIL CL 3**	**6,36E-09**	**SIL 3**	**8,45E-05**	**20**

All the units used within a safety function must be considered when calculating the safety characteristic data.

Order reference

Product

Product type	Features	Order No.
PNOZ ms4p	Expansion module, speed monitor	773 830

Accessories

Connection terminals

Product type	Features	Order no.
Set spring terminals	1 set of spring-loaded terminals	783 800
Set screw terminals	1 set of screw terminals	793 800

Terminator, jumper

Product type	Features	Order no.
PNOZmulti bus terminator	Terminator	779 110
KOP-XE	Jumper	774 639

Application examples

Example without position control

Evaluation of bit: "Unfeasible or single-channel signal from the incremental encoder", without position control

Diagnostic bit 10: "Unfeasible or single-channel signal from the incremental encoder" must be evaluated in the user program during operation in such a way that a set bit leads to a safety-related error reaction (shutdown).

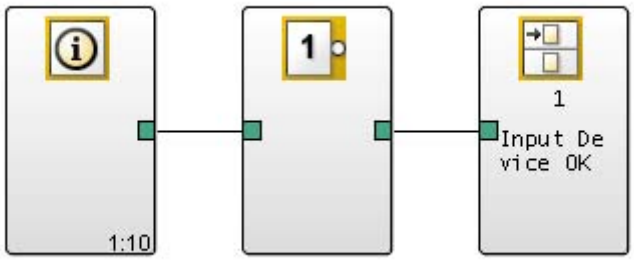

The connection point "Input Device OK" must be incorporated into the application and evaluated in such a way that a shutdown occurs if the connection point "Input Device OK"= 0.

Example with position control

Evaluation of bit: "Unfeasible or single-channel signal from the incremental encoder", with position control

Diagnostic bit 10: "Unfeasible or single-channel signal from the incremental encoder" may be set during position control as a result of jitter on the encoder.

The set bit can be tolerated, i.e. evaluated in the user program in such a way that a shutdown will not occur if the following conditions are met:

- An additional position control signal must be provided from an external control system (e.g. PLC) and

Speed monitors
PNOZ ms4p

- The signal must have the following status conditions:
  - Position control: Signal status = 1
  - Operation: Signal status = 0

During operation, diagnostic bit 10 must be evaluated in the user program in such a way that a set bit leads to a safety-related error reaction (shutdown).

Application example:

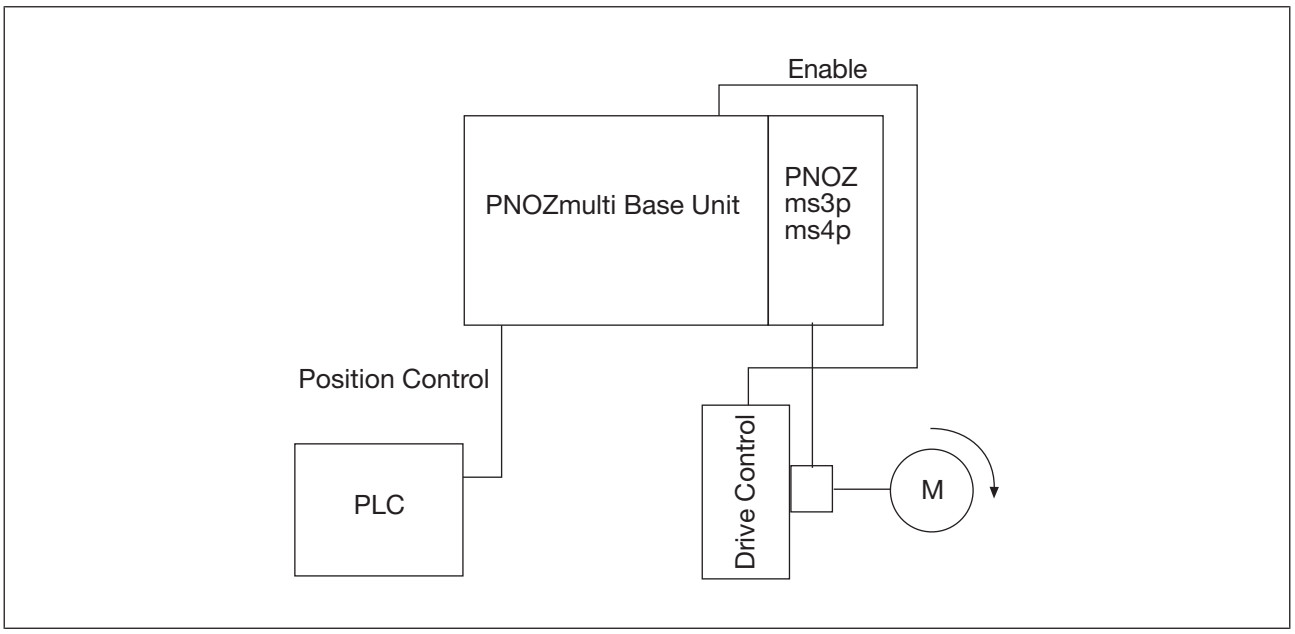

Depending on the operating mode, evaluation of diagnostic bit 10 can be implemented in the user program as follows:

Speed monitors
PNOZ ms4p

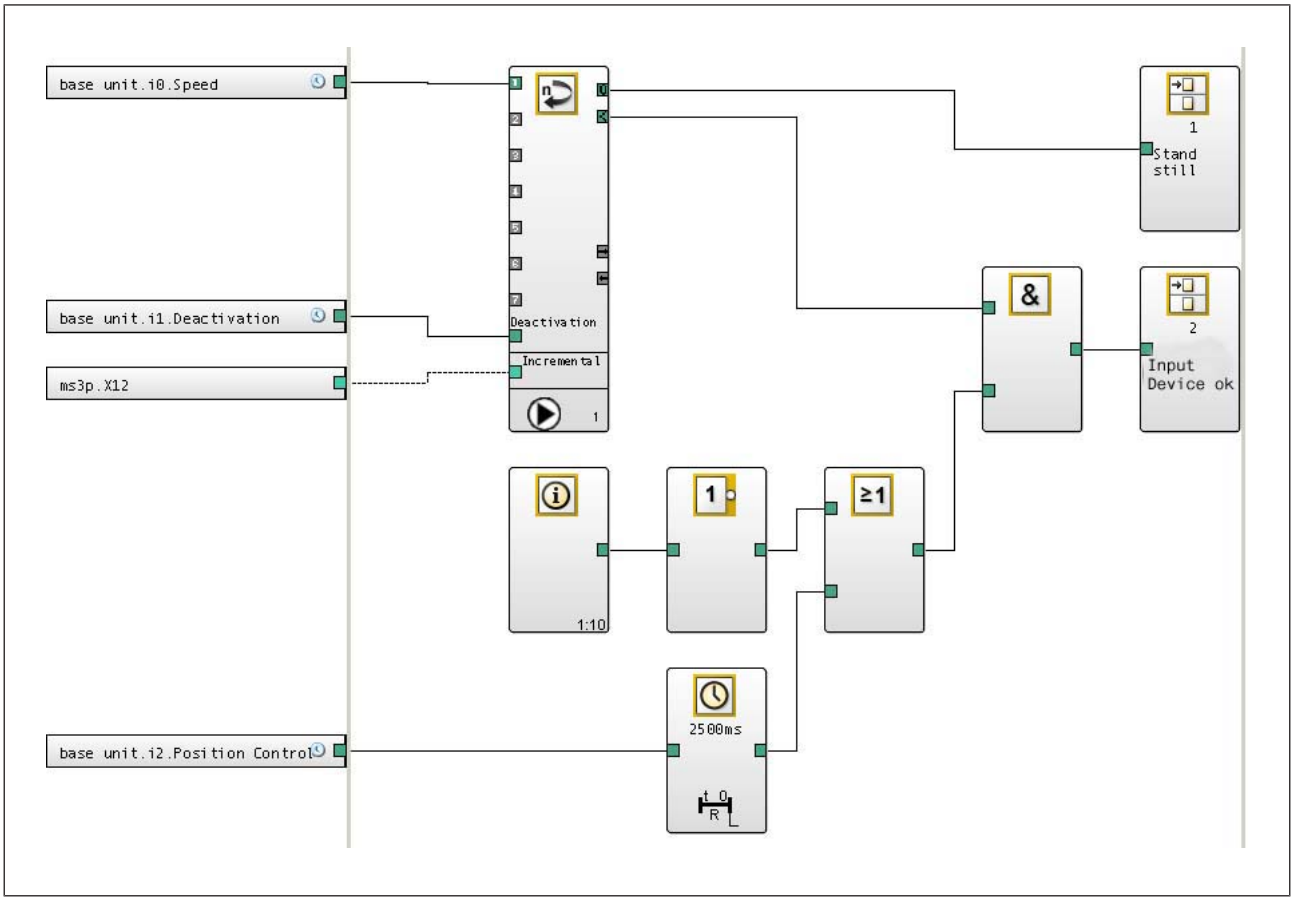

An additional "Position Control" signal is incorporated. This signal indicates whether the relevant axis is in position control (signal status = 1) or in operation (signal status = 0).

The time element with configured switch-off delay operates as a start-up suppressor, as the bit: "Unfeasible or single-channel signal from the incremental encoder" may still be present for 2 s after leaving standstill.

The connection point "Input Device OK" must be incorporated into the application and evaluated in such a way that a shutdown occurs if the connection point "Input Device OK"= 0.

Fieldbus modules
PNOZ mc0p



Overview

Unit features

Application of the product PNOZ mc0p:

Power supply used to supply voltage to the fieldbus modules PNOZ mc5p or PNOZ mc5.1p LWL.

The product has the following features:

- Interface to connect the base unit and a fieldbus module
- Galvanic isolation
- Max. 1 fieldbus module (PNOZ mc5p or PNOZ mc5.1p LWL) can be connected
- Supply voltage 24 V DC
- Status indicators
- Please refer to the document "PNOZmulti System Expansion" for the PNOZmulti base units that can be connected.

Fieldbus modules
PNOZ mc0p

Front view

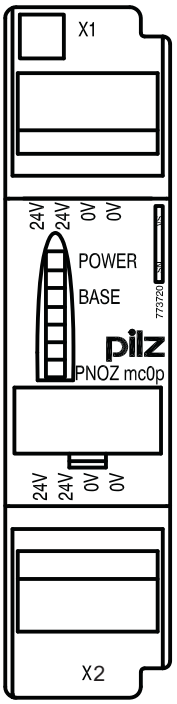

Function description

Functions

The PNOZ mc0p power supply provides the fieldbus module with the necessary internal supply voltage. This way the fieldbus module remains available even when the base unit is switched off. The power supply is connected to the base unit and fieldbus module via jumpers. When the 24 VDC supply voltage is applied, the “POWER” LED is lit. The “BASE” LED is lit when supply voltage is applied to the base unit.

Fieldbus modules
PNOZ mc0p

Block diagram

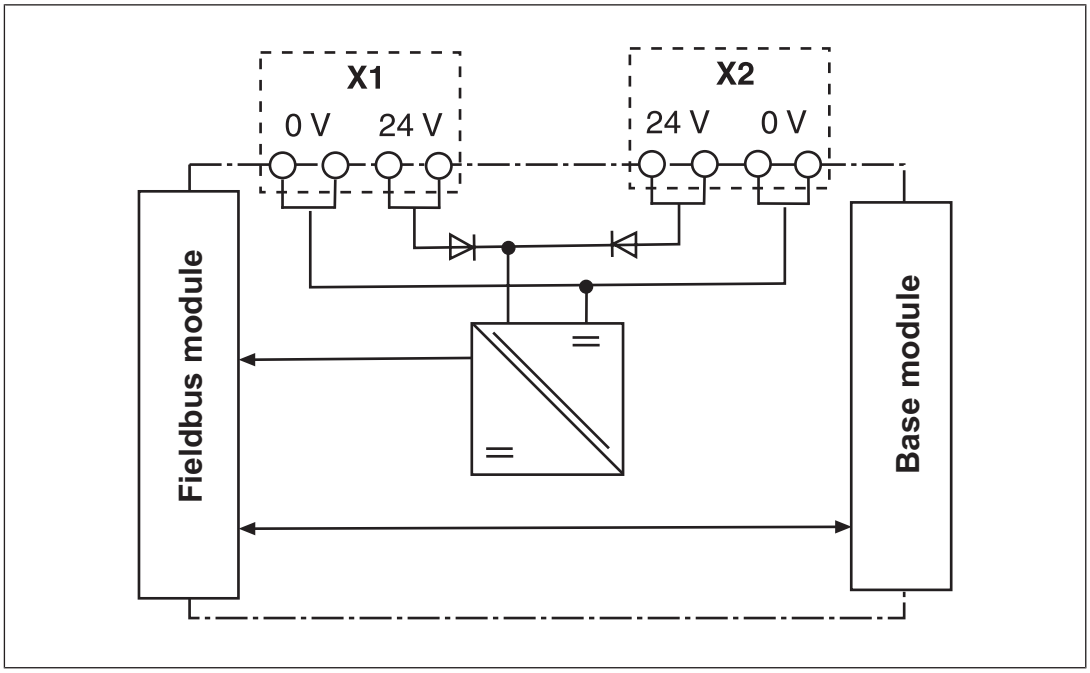

Installation

Dimensions in mm

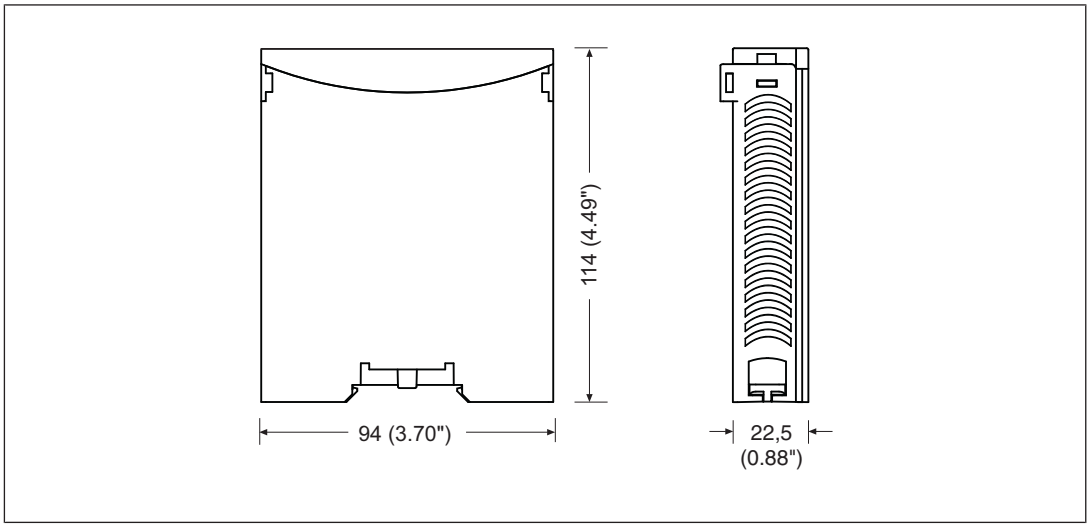

Fieldbus modules
PNOZ mc0p

Commissioning

General wiring guidelines

Please note:

- The PNOZ mc0p can be supplied by a separate power supply (see Connection example [📖 400]). The power supply must meet the regulations for extra low voltages with protective electrical separation (SELV, PELV).
- The torque setting of the screws on the connection terminals is specified under Technical details [📖 400].
- Use copper wiring with a temperature stability of 75 °C.
- Information given in the Technical details [📖 400] must be followed.

Connection

Supply voltage	AC	DC
Supply voltage from Interbus master only: Connect the supply voltage to **X1** or **X2**. The fieldbus connection is maintained if the base unit is switched off. When the Interbus master is restarted, the power supply to the base unit must be reset.	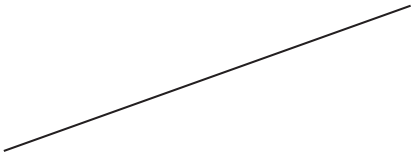	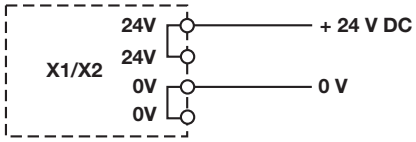
Supply voltage from Interbus master and base unit: Example: Connect the supply voltage from the base unit to **X1**. Connect the supply voltage from the Interbus master to **X2**. The fieldbus connection is maintained if the base unit is switched off. When the Interbus master is restarted, the fieldbus is available immediately.	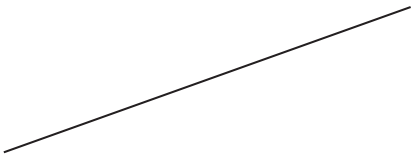	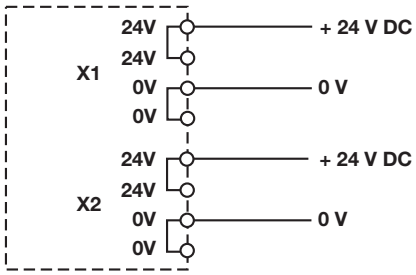

Fieldbus modules
PNOZ mc0p

Connection example

Redundant power supply

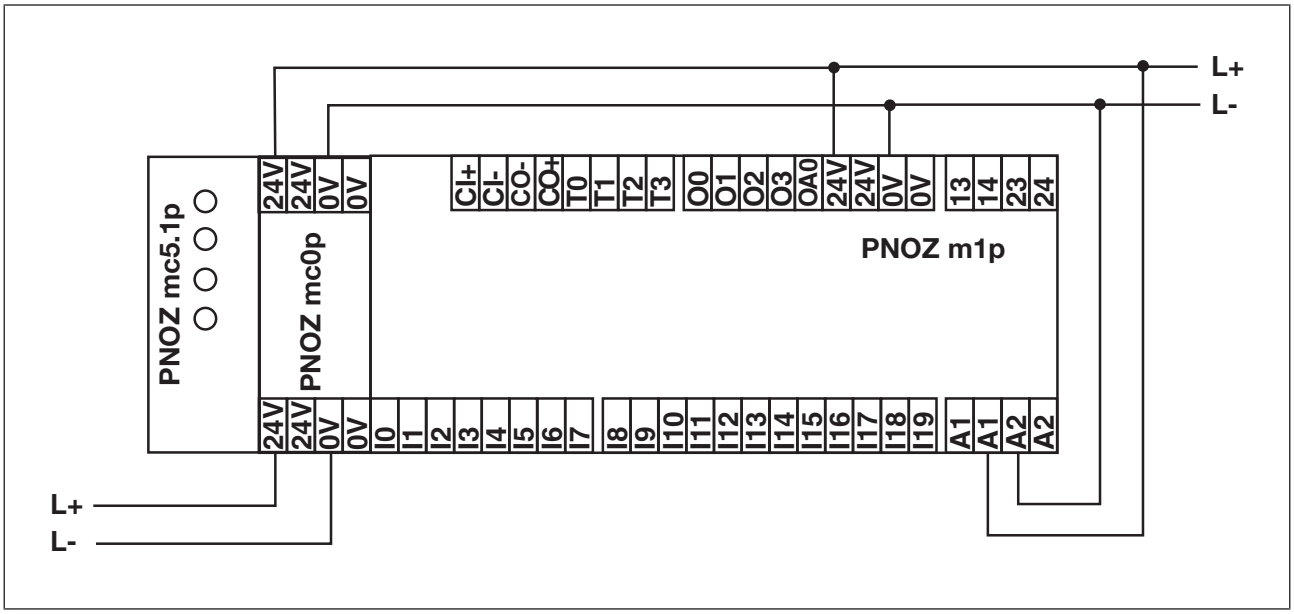

Technical details

General	
Certifications	**CCC, CE, EAC (Eurasian), cULus Listed**
Electrical data	
Supply voltage	
for	**Module supply**
Voltage	**24 V**
Kind	**DC**
Voltage tolerance	**-15 %/+20 %**
Output of external power supply (DC)	**5 W**
Residual ripple DC	**5 %**
Potential isolation	**yes**
Status indicator	**LED**
Times	
Supply interruption before de-energisation	**20 ms**
Environmental data	
Ambient temperature	
In accordance with the standard	**EN 60068-2-14**
Temperature range	**0 - 55 °C**

Fieldbus modules
PNOZ mc0p

Environmental data	
Storage temperature	
In accordance with the standard	**EN 60068-2-1/-2**
Temperature range	**-25 - 70 °C**
Climatic suitability	
In accordance with the standard	**EN 60068-2-30, EN 60068-2-78**
Humidity	**93 % r. h. at 40 °C**
Condensation during operation	**Not permitted**
EMC	**EN 61131-2**
Vibration	
In accordance with the standard	**EN 60068-2-6**
Frequency	**10 - 150 Hz**
Acceleration	**1g**
Shock stress	
In accordance with the standard	**EN 60068-2-27**
Acceleration	**15g**
Duration	**11 ms**
Max. operating height above sea level	**2000 m**
Airgap creepage	
In accordance with the standard	**EN 61131-2**
Overvoltage category	**III**
Pollution degree	**2**
Rated insulation voltage	**30 V**
Protection type	
In accordance with the standard	**EN 60529**
Mounting area (e.g. control cabinet)	**IP54**
Housing	**IP20**
Terminals	**IP20**
Potential isolation	
Potential isolation between	**Module and system voltage**
Type of potential isolation	**Functional insulation**
Rated surge voltage	**500 V**
Mechanical data	
Mounting position	**horizontally on mounting rail**
DIN rail	
Top hat rail	**35 x 7,5 EN 50022**
Recess width	**27 mm**
Material	
Bottom	**PPO UL 94 V0**
Front	**ABS UL 94 V0**
Connection type	**Spring-loaded terminal, screw terminal**

Fieldbus modules
PNOZ mc0p

Mechanical data	
Conductor cross section with screw terminals	
1 core flexible	**0,25 - 1,5 mm², 24 - 16 AWG**
2 core with the same cross section, flexible without crimp connectors or with TWIN crimp connectors	**0,25 - 0,75 mm², 24 - 20 AWG**
Torque setting with screw terminals	**0,25 Nm**
Stripping length with screw terminals	**7 mm**
Conductor cross section with spring-loaded terminals	
1 core flexible without crimp connector	**0,25 - 1,5 mm², 24 - 16 AWG**
1 core flexible with crimp connector	**0,25 - 0,75 mm², 24 - 20 AWG**
Spring-loaded terminals: Terminal points per connection	**1**
Stripping length with spring-loaded terminals	**9 mm**
Dimensions	
Height	**94 mm**
Width	**22,5 mm**
Depth	**121 mm**
Weight	**125 g**

Where standards are undated, the 2020-07 latest editions shall apply.

Order reference

Product

Product type	Features	Order No.
PNOZ mc0p	Expansion module, power supply for fieldbus modules	773 720

Accessories

Jumper

Product type	Features	Order No.
KOP-XE	Jumper	774 639

Connection terminals

Product type	Features	Order No.
Set spring terminals	1 set of spring-loaded terminals	783 400
Set screw terminals	1 set of screw terminals	793 400

Fieldbus modules
PNOZ mc1p



Overview

Unit features

Application of the product PNOZ mc1p:

Expansion module for connection to a base unit from the configurable control system PNOZmulti

The product has the following features:

- Can be configured in the PNOZmulti Configurator
- Semiconductor outputs:
  - 16 auxiliary outputs
- Status indicators
- Coated version:

  Increased environmental requirements (see Technical details [📖 407])
- Plug-in connection terminals:
  Either spring-loaded terminal or screw terminal available as an accessory (see Order references for accessories [📖 772]).
- Please refer to the document "PNOZmulti System Expansion" for details of the base units that can be connected.

Fieldbus modules
PNOZ mc1p

Front view

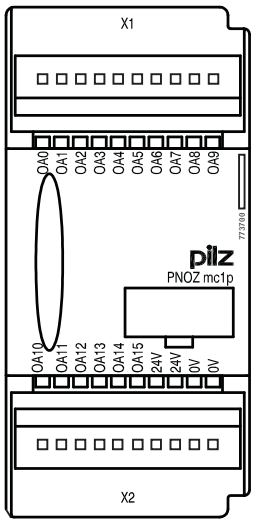

Function description

Functions

The expansion module operates as a signal module with non-safety-related outputs.

The function of the outputs on the safety system depends on the safety circuit created using the PNOZmulti Configurator. A chip card is used to download the safety circuit to the base unit. The base unit has 2 microcontrollers that monitor each other. They evaluate the input circuits on the base unit and expansion modules and switch the outputs on the base unit and expansion modules accordingly.

The online help on the PNOZmulti Configurator contains descriptions of the operating modes and all the functions of the PNOZmulti safety system, plus connection examples.

Fieldbus modules
PNOZ mc1p

Block diagram

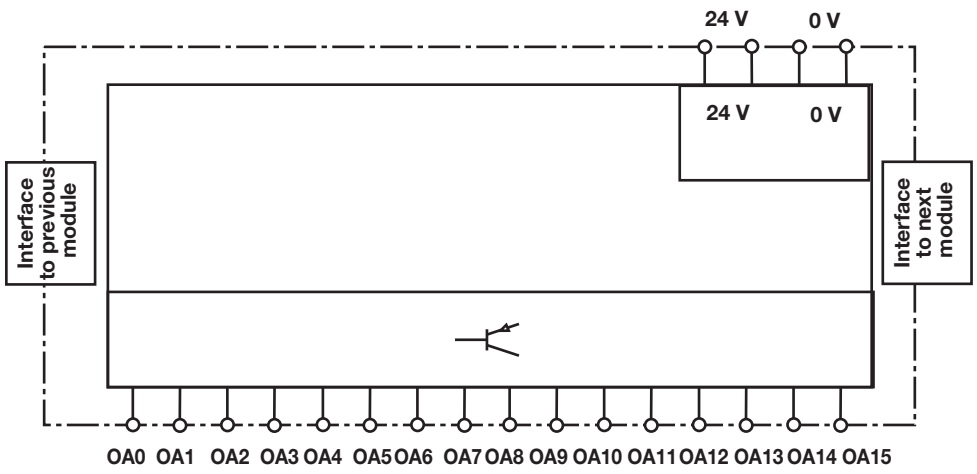

Installation

Dimensions

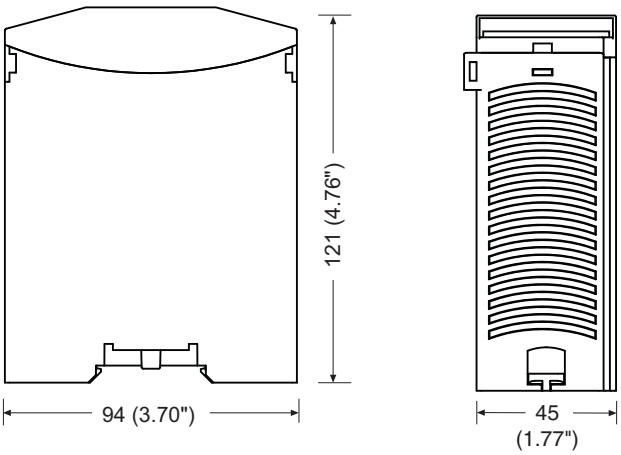

Fieldbus modules
PNOZ mc1p

Commissioning

General wiring guidelines

The wiring is defined in the circuit diagram in the Configurator.

Please note:

- 2 connection terminals are available for each of the supply connections 24 V and 0 V. This means that the supply voltage can be looped through several connections. The current at each terminal may not exceed 3 A.
- Outputs OA0 to OA15 are auxiliary outputs using semiconductor technology.
- Use copper wiring with a temperature stability of 75 °C.
- Information given in the Technical details [📖 407] must be followed.

Connection

Supply voltage	AC	DC
	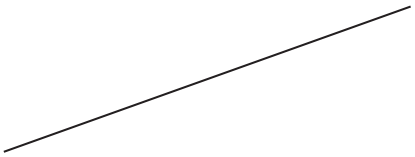	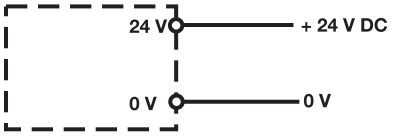

Supply voltage

	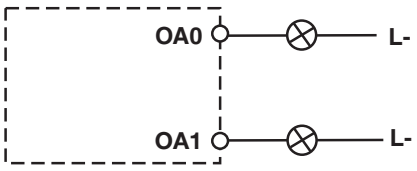	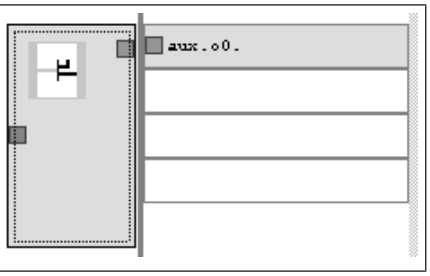

Semiconductor outputs

Fieldbus modules
PNOZ mc1p

Technical details

General	773700	773705
Certifications	BG, CCC, CE, EAC (Eurasian), KOSHA, TÜV, cULus Listed	BG, CCC, CE, EAC (Eurasian), KOSHA, TÜV, cULus Listed
Electrical data	**773700**	**773705**
Supply voltage		
for	Supply to the SC outputs	Supply to the SC outputs
Voltage	24 V	24 V
Kind	DC	DC
Voltage tolerance	-15 %/+20 %	-15 %/+20 %
Output of external power supply (DC)	192 W	192 W
Potential isolation	yes	yes
Supply voltage		
for	Module supply	Module supply
internal	Via base unit	Via base unit
Voltage	5 V	5 V
Kind	DC	DC
Voltage tolerance	-2 %/+2 %	-2 %/+2 %
Power consumption	0,6 W	0,6 W
Status indicator	LED	LED
Semiconductor outputs (standard)	**773700**	**773705**
Number	16	16
Switching capability		
Voltage	24 V	24 V
Current	0,5 A	0,5 A
Power	12 W	12 W
Max. permitted overall performance of semiconductor outputs at an ambient temperature of > 50 °C	–	144 W
Galvanic isolation	yes	yes
Short circuit-proof	yes	yes
Residual current at "0"	0,5 mA	0,5 mA
Signal level at "1"	UB - 0.5 VDC at 0.5 A	UB - 0.5 VDC at 0.5 A
Times	**773700**	**773705**
Switch-on delay	5 s	5 s
Supply interruption before de-energisation	20 ms	20 ms

Fieldbus modules
PNOZ mc1p

Environmental data	773700	773705
Ambient temperature		
In accordance with the standard	**EN 60068-2-14**	**EN 60068-2-14**
Temperature range	**0 - 60 °C**	**-25 - 60 °C**
Forced convection in control cabinet off	**55 °C**	–
Storage temperature		
In accordance with the standard	**EN 60068-2-1/-2**	**EN 60068-2-1/-2**
Temperature range	**-25 - 70 °C**	**-25 - 70 °C**
Climatic suitability		
In accordance with the standard	**EN 60068-2-30, EN 60068-2-78**	**EN 60068-2-30, EN 60068-2-78**
Humidity	**93 % r. h. at 40 °C**	**93 % r. h. at 40 °C**
Condensation during operation	**Not permitted**	**Short-term**
EMC	**EN 61131-2**	**EN 61131-2**
Vibration		
In accordance with the standard	**EN 60068-2-6**	**EN 60068-2-6**
Frequency	**10 - 150 Hz**	**10 - 150 Hz**
Acceleration	**1g**	**1g**
Corrosive gas check		
SO2: Concentration 10 ppm, duration 10 days, passive	–	**DIN V 40046-36**
H2S: Concentration 1 ppm, duration 10 days, passive	–	**DIN V 40046-37**
Shock stress		
In accordance with the standard	**EN 60068-2-27**	**EN 60068-2-27**
Acceleration	**15g**	**15g**
Duration	**11 ms**	**11 ms**
Max. operating height above sea level	**2000 m**	**2000 m**
Airgap creepage		
In accordance with the standard	**EN 61131-2**	**EN 61131-2**
Overvoltage category	**III**	**III**
Pollution degree	**2**	**2**
Rated insulation voltage	**30 V**	**30 V**
Protection type		
In accordance with the standard	**EN 60529**	**EN 60529**
Mounting area (e.g. control cabinet)	**IP54**	**IP54**
Housing	**IP20**	**IP20**
Terminals	**IP20**	**IP20**
Mechanical data	**773700**	**773705**
Mounting position	**horizontally on mounting rail**	**horizontally on mounting rail**

Fieldbus modules
PNOZ mc1p

Mechanical data	773700	773705
DIN rail		
Top hat rail	**35 x 7,5 EN 50022**	**35 x 7,5 EN 50022**
Recess width	**27 mm**	**27 mm**
Material		
Bottom	**PPO UL 94 V0**	**PPO UL 94 V0**
Front	**ABS UL 94 V0**	**ABS UL 94 V0**
Connection type	**Spring-loaded terminal, screw terminal**	**Spring-loaded terminal, screw terminal**
Conductor cross section with screw terminals		
1 core flexible	**0,25 - 1,5 mm², 24 - 16 AWG**	**0,25 - 1,5 mm², 24 - 16 AWG**
2 core with the same cross section, flexible without crimp connectors or with TWIN crimp connectors	**0,25 - 0,75 mm², 24 - 20 AWG**	**0,25 - 0,75 mm², 24 - 20 AWG**
Torque setting with screw terminals	**0,25 Nm**	**0,25 Nm**
Stripping length with screw terminals	**7 mm**	**7 mm**
Conductor cross section with spring-loaded terminals		
1 core flexible without crimp connector	**0,25 - 1,5 mm², 24 - 16 AWG**	**0,25 - 1,5 mm², 24 - 16 AWG**
1 core flexible with crimp connector	**0,25 - 0,75 mm², 24 - 20 AWG**	**0,25 - 0,75 mm², 24 - 20 AWG**
Spring-loaded terminals: Terminal points per connection	**1**	**1**
Stripping length with spring-loaded terminals	**9 mm**	**9 mm**
Dimensions		
Height	**94 mm**	**94 mm**
Width	**45 mm**	**45 mm**
Depth	**121 mm**	**121 mm**
Weight	**164 g**	**166 g**

Where standards are undated, the 2020-07 latest editions shall apply.

Fieldbus modules
PNOZ mc1p

Order reference

Product

Product type	Features	Order No.
PNOZ mc1p	Expansion module, 16 semiconductor outputs, standard	773 700
PNOZ mc1p coated version	Expansion module, 16 semiconductor outputs, standard, coated version	773 705

Accessories

Terminator, jumper

Product type	Features	Order No.
PNOZmulti bus terminator	Terminator	779 110
PNOZmulti bus terminator coated	Terminator, coated version	779 112
KOP-XE	Jumper	774 639
KOP-XE coated	Jumper, coated version	774 640

Connection terminals

Product type	Features	Order No.
Set spring terminals	1 set of spring-loaded terminals	783 700
Set screw terminals	1 set of screw terminals	793 700

Fieldbus modules
PNOZ mc2.1p



Overview

Unit features

Application of the product PNOZ mc2.1p:

Expansion module for connection to a base unit from the configurable control system PNOZmulti

The product has the following features:

- Can be configured in the PNOZmulti Configurator
- Network protocols: EtherCAT
- supports CANopen over EtherCAT (DS301 V4.02-compliant)
- Status indicators for communication with EtherCAT and for errors
- The data length and the content of the PDOs can be freely configured from EtherCAT-Master (max. 148 Bytes TxPDO and 20 Bytes RxPDO). The data are described in the document entitled "Communication Interfaces".
- 24 virtual inputs and outputs on the control system PNOZmulti can be defined in the PNOZmulti Configurator for communication with the fieldbus EtherCAT . The number of inputs and outputs can be extended to 128. Please note that when the extended inputs and outputs 24 - 127 are used they have different properties (see document entitled "Communication Interfaces").
- Max. 1 PNOZ mc2.1p can be connected to the base unit
- Please refer to the document "PNOZmulti System Expansion" for the PNOZmulti base units that can be connected.

Fieldbus modules
PNOZ mc2.1p

Front view

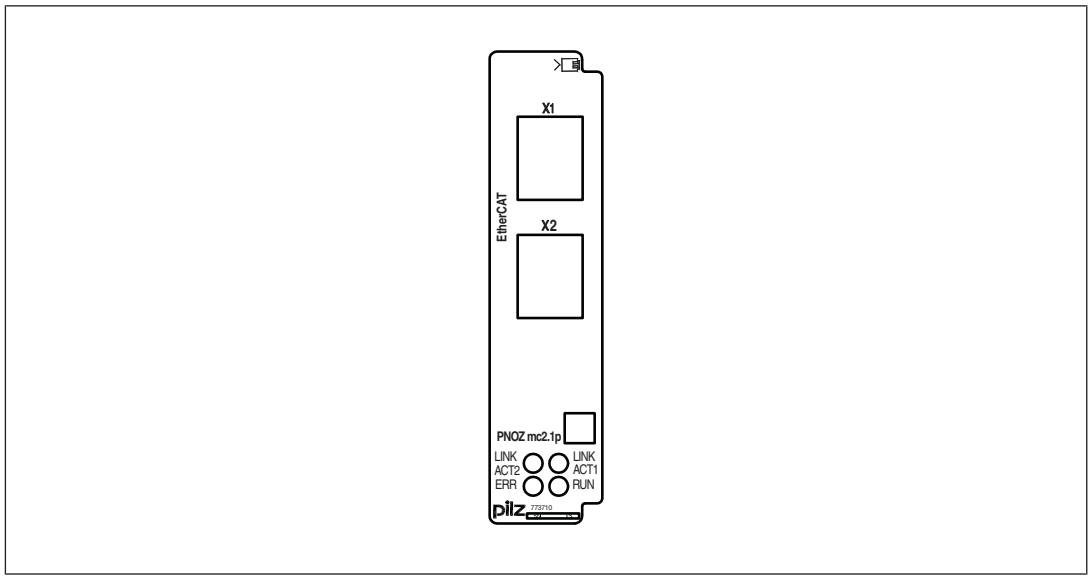

Legend:

- X1: EtherCAT IN
- X2: EtherCAT OUT
- LEDs:
  - LINK ACT1
  - LINK ACT2
  - ERR
  - RUN

EtherCAT® is registered trademark and patented technology, licensed by Beckhoff Automation GmbH, Germany

Function description

Operation

The virtual inputs and outputs that are to be transferred via EtherCAT are selected and configured in the PNOZmulti Configurator. The base unit and the expansion module PNOZ mc2.1p are connected via a jumper. After the supply voltage is switched on or the PNOZmulti control system is reset, the expansion module PNOZ mc2.1p is configured and started automatically.

The connection to EtherCAT is made via the two RJ45 sockets.

LEDs indicate the status of the expansion module on EtherCAT.

The configuration is described in detail in the PNOZmulti Configurator's online help.

Fieldbus modules
PNOZ mc2.1p

Input and output data

The data is structured as follows:

- Input area

  The inputs are defined in the master and transferred to the PNOZmulti. Each input has a number, e.g. input bit 4 of byte 1 has the number i12.

- Output range

  The outputs are defined in the PNOZmulti Configurator. Each output that is used is given a number there, e.g. o0, o5... The status of output o0 is stored in bit 0 of byte 0; the status of output o5 is stored in bit 5 of byte 0 etc.

- Output range only: Byte 3

  Bits 0 … 4: Status of LEDs on the PNOZmulti

  – Bit 0: OFAULT
  – Bit 1: IFAULT
  – Bit 2: FAULT
  – Bit 3: DIAG
  – Bit 4: RUN

  Bit 5: Data is being exchanged.

Detailed information on data exchange (tables, segments) is available in the document "Communication Interfaces" in the section entitled "Fieldbus modules".

Assigning the inputs/outputs in the PNOZmulti Configurator to the EtherCAT inputs/outputs

Virtual inputs on PNOZmulti Configurator	i0 ... I7	i8 ... i15	i16 ... i23
Input data EtherCAT	Byte 0: Bits 0 … 7	Byte 1: Bits 0 … 7	Byte 2: Bits 0 … 7
Virtual outputs on PNOZmulti Configurator	o0 ... o7	o8 ... o15	o16 ... o23
Output data EtherCAT	Byte 0: Bits 0 … 7	Byte 1: Bits 0 … 7	Byte 2: Bits 0 … 7

The number of virtual inputs and outputs can be extended to 128 (see document "Communication Interfaces" in the section entitled "Fieldbus modules")

Fieldbus modules
PNOZ mc2.1p

Block diagram

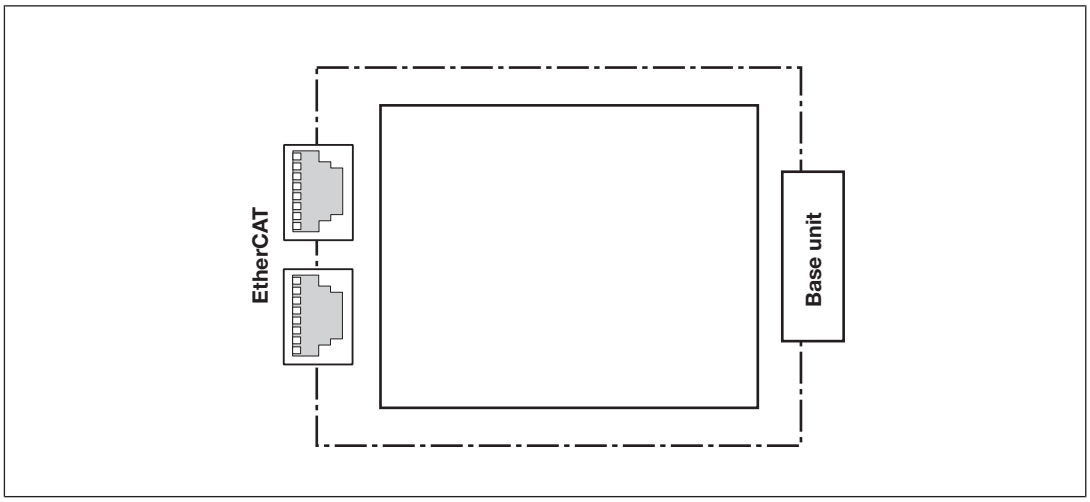

Installation

Dimensions in mm

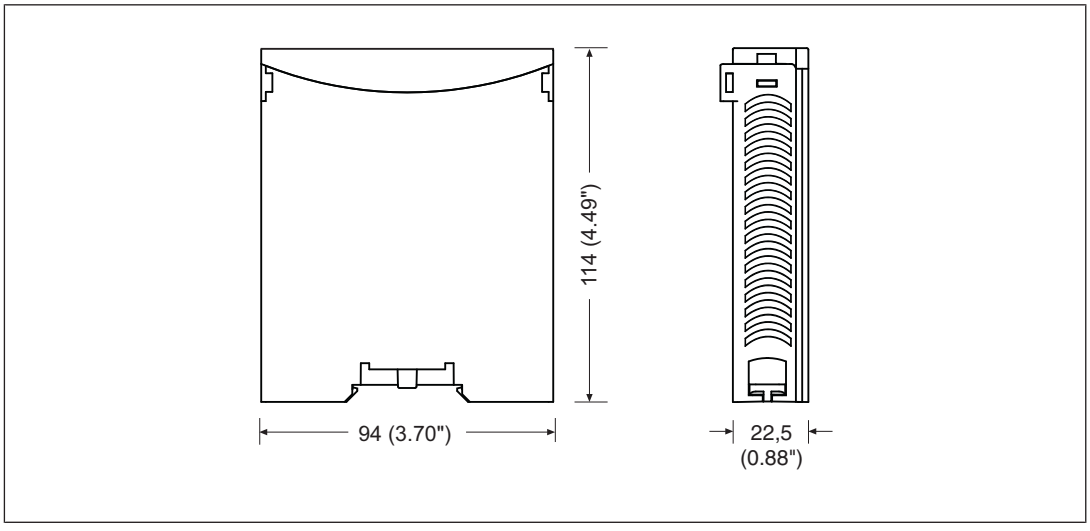

Commissioning

General wiring guidelines

The wiring is defined in the circuit diagram of the PNOZmulti Configurator.

It is possible to define which inputs and outputs on the safety system will communicate with EtherCAT.

Please note:

- Information given in the Technical details [416] must be followed.

- Use copper wiring with a temperature stability of 75 °C.

Please note the following when connecting to EtherCAT:

- The following minimum requirements of the connection cable and connector must be met:
  - Only use standard industrial Ethernet cable and connectors.
  - Only use double-shielded twisted pair cable and shielded RJ45 connectors (industrial connectors).
  - 100BaseTX cable in accordance with the Ethernet standard (min. Category 5)
- Measures to protect against interference:

  Ensure the requirements for the industrial use of EtherCAT are met, as stated in the Installation Manual published by the User Group.

Interface assignment

RJ45 socket 8-pin	PIN	Standard
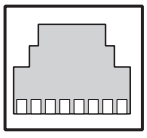	1	TD+ (Transmit+)
	2	TD- (Transmit-)
	3	RD+ (Receive+)
	4	n.c.
	5	n.c.
	6	RD- (Receive-)
	7	n.c.
	8	n.c.

n.c.: Not connected

Preparing for operation

- Install Device Description File

  Install the *Device Description File* in your configuration software. You can only then use the PNOZ mc2.1p.
- Connect the supply voltage to the base unit:

  Terminals **24 V** and **A1 (+)**: + 24 VDC

  Terminals **0 V** and **A2 (-)** : 0 V

Fieldbus modules
PNOZ mc2.1p

Connection example

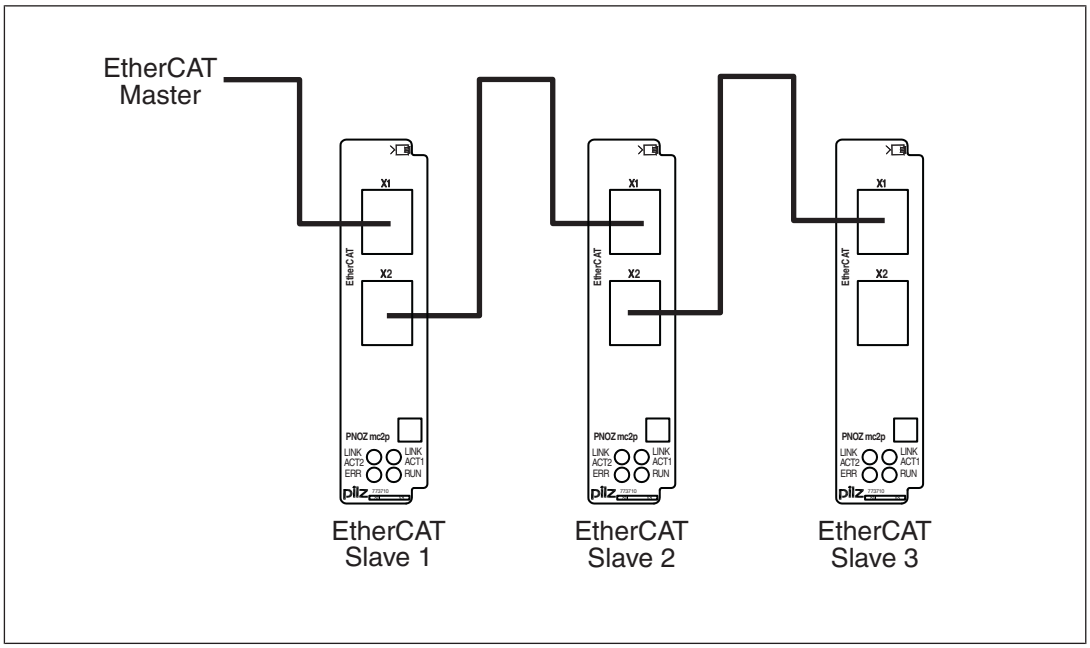

Technical details

General	
Certifications	**CCC, CE, EAC (Eurasian), cULus Listed**
Electrical data	
Supply voltage	
for	**Module supply**
internal	**Via base unit**
Voltage	**5 V**
Kind	**DC**
Voltage tolerance	**-2 %/+2 %**
Power consumption	**1,6 W**
Status indicator	**LED**
Fieldbus interface	
Fieldbus interface	**EtherCAT**
Device type	**Slave**
Log	**CANopen over EtherCAT**
Transmission rates	**100 MBit/s**
Connection	**RJ45**
Galvanic isolation	**yes**
Test voltage	**500 V AC**

Fieldbus modules
PNOZ mc2.1p

Times	
Supply interruption before de-energisation	**20 ms**
Environmental data	
Ambient temperature	
In accordance with the standard	**EN 60068-2-14**
Temperature range	**0 - 60 °C**
Storage temperature	
In accordance with the standard	**EN 60068-2-1/-2**
Temperature range	**-25 - 70 °C**
Climatic suitability	
In accordance with the standard	**EN 60068-2-30**
Humidity	**93 % r. h. at 40 °C**
Condensation during operation	**Not permitted**
EMC	**EN 61131-2**
Vibration	
In accordance with the standard	**EN 60068-2-6**
Frequency	**10 - 150 Hz**
Acceleration	**1g**
Shock stress	
In accordance with the standard	**EN 60068-2-27**
Acceleration	**15g**
Duration	**11 ms**
Max. operating height above sea level	**2000 m**
Airgap creepage	
In accordance with the standard	**EN 61131-2**
Overvoltage category	**III**
Pollution degree	**2**
Rated insulation voltage	**30 V**
Protection type	
In accordance with the standard	**EN 60529**
Mounting area (e.g. control cabinet)	**IP54**
Housing	**IP20**
Terminals	**IP20**
Mechanical data	
Mounting position	**horizontally on mounting rail**
DIN rail	
Top hat rail	**35 x 7,5 EN 50022**
Recess width	**27 mm**
Material	
Bottom	**PPO UL 94 V0**
Front	**ABS UL 94 V0**

Fieldbus modules
PNOZ mc2.1p

Mechanical data	
Dimensions	
Height	**94 mm**
Width	**22,5 mm**
Depth	**114 mm**
Weight	**114 g**

Where standards are undated, the 2020-07 latest editions shall apply.

Order reference

Product

Product type	Features	Order No.
PNOZ mc2.1p	Fieldbus module, EtherCAT	773 713

Accessories

Jumper

Product type	Features	Order No.
KOP-XE	Jumper	774 639

Fieldbus modules
PNOZ mc3p



Overview

Unit features

Application of the product PNOZ mc3p:

Expansion module for connection to a base unit from the configurable control system PNOZmulti

The product has the following features:

- Can be configured in the PNOZmulti Configurator
- Connection for PROFIBUS-DP
- Station addresses from 0 ... 99, selected via rotary switch
- Status indicators for communication with PROFIBUS-DP and for errors
- 24 virtual inputs and outputs on the control system PNOZmulti can be defined in the PNOZmulti Configurator for communication with the fieldbus PROFIBUS-DP . The number of inputs and outputs can be extended to 128. Please note that when the extended inputs and outputs 24 - 127 are used they have different properties (see document entitled "Communication Interfaces").
- Max. 1 PNOZ mc3p can be connected to the base unit
- Please refer to the document "PNOZmulti System Expansion" for the PNOZmulti base units that can be connected.

Fieldbus modules
PNOZ mc3p

Front view

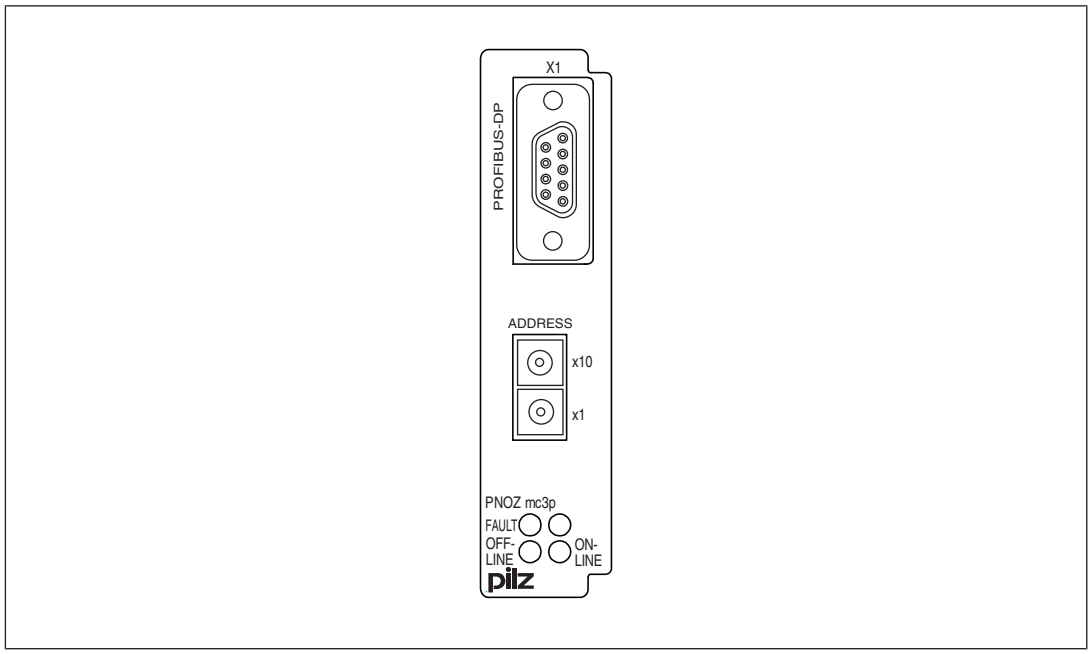

Key:

- X1:
  PROFIBUS-DP interface (female 9-pin D-Sub connector)
- LEDs:
  - FAULT
  - OFFLINE
  - ONLINE

Function description

Functions

The virtual inputs and outputs that are to be transferred via PROFIBUS are selected and configured in the PNOZmulti Configurator. The base unit and the expansion module PNOZ mc3p are connected via a jumper. The expansion module PNOZ mc3p is also supplied with voltage via this jumper.

The station address is set via rotary switches. After the supply voltage is switched on or the PNOZmulti control system is reset, the expansion module PNOZ mc3p is configured and started automatically.

LEDs indicate the status of the expansion module on PROFIBUS.

The configuration is described in detail in the PNOZmulti Configurator's online help.

Fieldbus modules
PNOZ mc3p

Input and output data

The data is structured as follows:

- Input area

  The inputs are defined in the master and transferred to the PNOZmulti. Each input has a number, e.g. input bit 4 of byte 1 has the number i12.

- Output range

  The outputs are defined in the PNOZmulti Configurator. Each output that is used is given a number there, e.g. o0, o5... The status of output o0 is stored in bit 0 of byte 0; the status of output o5 is stored in bit 5 of byte 0 etc.

- Output range only: Byte 3

  Bits 0 … 4: Status of LEDs on the PNOZmulti

  – Bit 0: OFAULT
  – Bit 1: IFAULT
  – Bit 2: FAULT
  – Bit 3: DIAG
  – Bit 4: RUN

  Bit 5: Data is being exchanged.

Detailed information on data exchange (tables, segments) is available in the document "Communication Interfaces" in the section entitled "Fieldbus modules".

Assigning the inputs/outputs in the PNOZmulti Configurator to the PROFIBUS-DP inputs/outputs

Virtual inputs on PNOZmulti Configurator	i0 ... I7	i8 ... i15	i16 ... i23
Input data PROFIBUS-DP	Byte 0: Bits 0 … 7	Byte 1: Bits 0 … 7	Byte 2: Bits 0 … 7
Virtual outputs on PNOZmulti Configurator	o0 ... o7	o8 ... o15	o16 ... o23
Output data PROFIBUS-DP	Byte 0: Bits 0 … 7	Byte 1: Bits 0 … 7	Byte 2: Bits 0 … 7

The number of virtual inputs and outputs can be extended to 128 (see document "Communication Interfaces" in the section entitled "Fieldbus modules")

Fieldbus modules
PNOZ mc3p

Block diagram

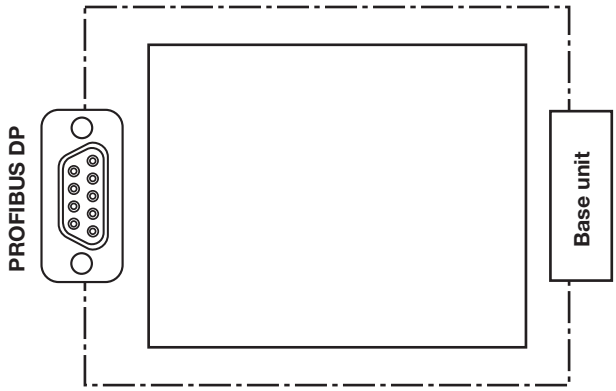

Installation

Dimensions in mm

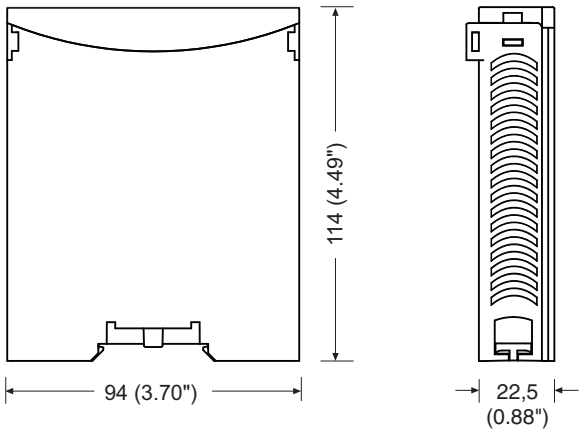

Commissioning

Wiring

General wiring guidelines

The wiring is defined in the circuit diagram of the PNOZmulti Configurator.

Please note:

- Information given in the Technical details [425] must be followed.
- The position of the expansion module is specified in the Hardware configuration of the PNOZmulti Configurator.
- Use copper wiring with a temperature stability of 75 °C.
- Always connect the mounting rail to the protective earth via an earthing terminal. This will be used to dissipate hazardous voltages in the case of a fault.
- The power supply must meet the regulations for extra low voltages with protective electrical separation (SELV, PELV).

Connecting the supply voltage

Connect the supply voltage to the base unit:

- Terminal **24 V** and **A1 (+)**: + 24 VDC
- Terminal **0 V** and **A2 (-)**: 0 V

PROFIBUS DP interface

It is possible to define which outputs on the control system will communicate with PROFIBUS-DP. The connection to PROFIBUS-DP is made via a female 9-pin D-Sub connector in accordance with the guidelines of the PROFIBUS User Group (PNO).

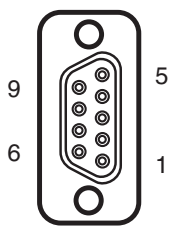

1: n.c.
2: n.c.
3: B (RxD/TxD-P)
4: CNTR-P
5: DGND
6: VP
7: n.c.
8: A (RxD/TxD-N)
9: n.c.

n.c. = not connected

Please note the following when connecting to PROFIBUS-DP:

- Only use metal plugs or metallised plastic plugs
- Twisted pair, screened cable must be used to connect the interfaces

Fieldbus modules
PNOZ mc3p

Preparing for operation

Setting the station address

The station address of the expansion module PNOZ mc3p is set between 0 ... 99 (decimal) via two rotary switches x1 and x10.

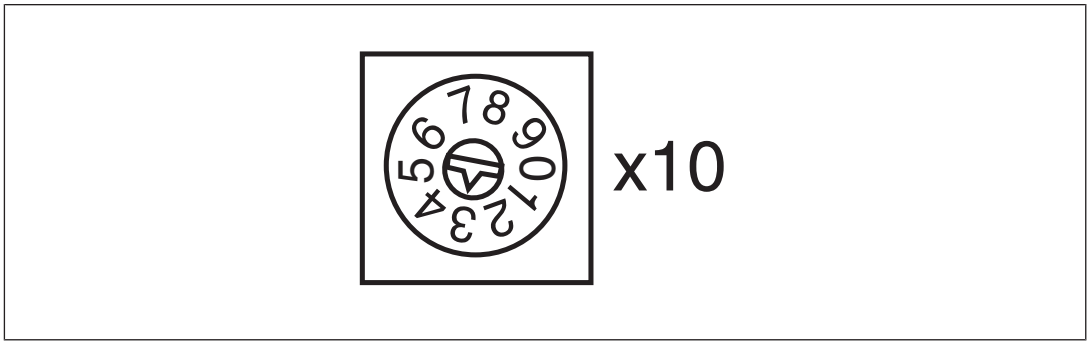

- On the upper rotary switch x10, use a small screwdriver to set the tens digit for the address (“3” in the example).

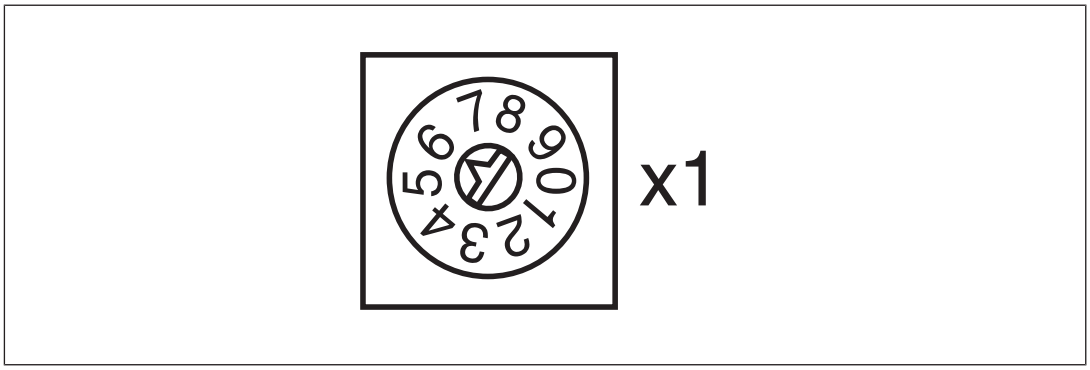

- On the lower rotary switch x1, set the ones digit for the address (“6” in the example).

Station address 36 is set in the diagrams as an example.

Download modified project to the control system PNOZmulti

As soon as an additional expansion module has been connected to the system, the project must be amended in the PNOZmulti Configurator and downloaded back into the base unit. Proceed as described in the operating manual for the base unit.

Fieldbus modules
PNOZ mc3p

Connection example

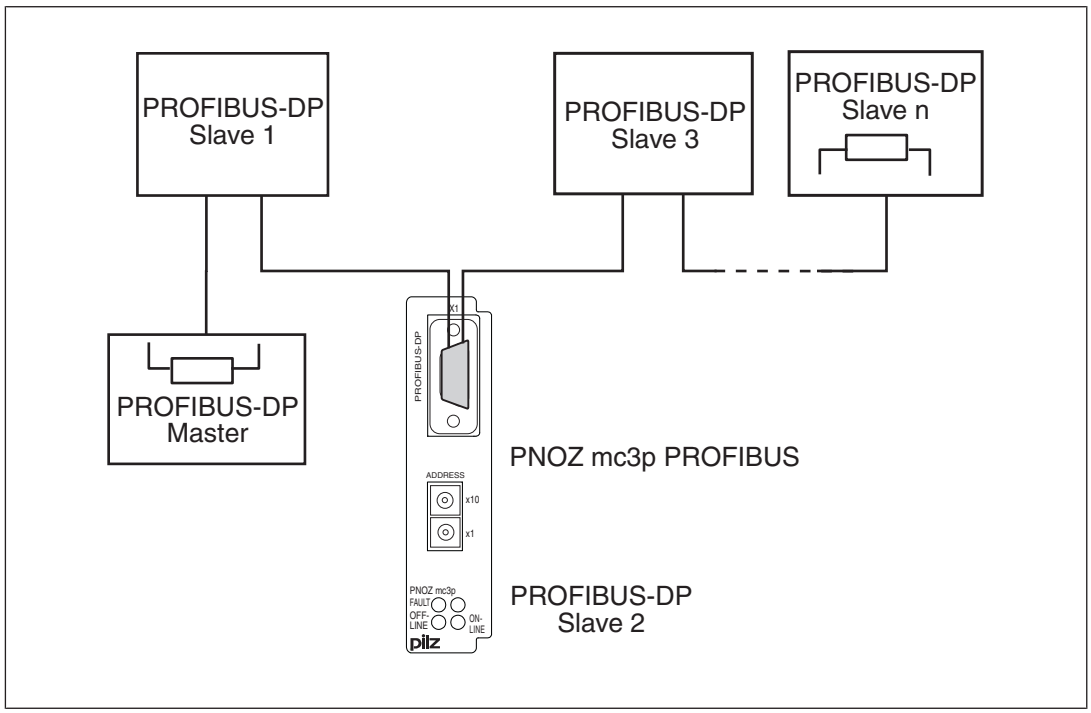

Technical details

General	
Certifications	**CCC, CE, EAC (Eurasian), KCC, KOSHA, TÜV, cU-Lus Listed**
Electrical data	
Supply voltage	
for	**Module supply**
internal	**Via base unit**
Voltage	**5 V**
Kind	**DC**
Voltage tolerance	**-2 %/+2 %**
Power consumption	**2,5 W**
Status indicator	**LED**
Fieldbus interface	
Fieldbus interface	**PROFIBUS-DP**
Device type	**Slave**
Station address	**0 - 99d**
Transmission rate	**9,6 kBit/s - 12 MBit/s**
Connection	**9-pin D-Sub female connector**
Galvanic isolation	**yes**

Fieldbus modules
PNOZ mc3p

Fieldbus interface	
Test voltage	**500 V AC**
Times	
Supply interruption before de-energisation	**20 ms**
Environmental data	
Ambient temperature	
In accordance with the standard	**EN 60068-2-14**
Temperature range	**0 - 60 °C**
Storage temperature	
In accordance with the standard	**EN 60068-2-1/-2**
Temperature range	**-25 - 70 °C**
Climatic suitability	
In accordance with the standard	**EN 60068-2-30, EN 60068-2-78**
Humidity	**93 % r. h. at 40 °C**
Condensation during operation	**Not permitted**
EMC	**EN 61131-2**
Vibration	
In accordance with the standard	**EN 60068-2-6**
Frequency	**10 - 150 Hz**
Acceleration	**1g**
Shock stress	
In accordance with the standard	**EN 60068-2-27**
Acceleration	**15g**
Duration	**11 ms**
Max. operating height above sea level	**2000 m**
Airgap creepage	
In accordance with the standard	**EN 61131-2**
Overvoltage category	**III**
Pollution degree	**2**
Rated insulation voltage	**30 V**
Protection type	
In accordance with the standard	**EN 60529**
Mounting area (e.g. control cabinet)	**IP54**
Housing	**IP20**
Terminals	**IP20**
Mechanical data	
Mounting position	**horizontally on mounting rail**
DIN rail	
Top hat rail	**35 x 7,5 EN 50022**
Recess width	**27 mm**

Fieldbus modules
PNOZ mc3p

Mechanical data	
Material	
Bottom	**PPO UL 94 V0**
Front	**ABS UL 94 V0**
Dimensions	
Height	**94 mm**
Width	**22,5 mm**
Depth	**119 mm**
Weight	**119 g**

Where standards are undated, the 2020-07 latest editions shall apply.

Order reference

Product

Product type	Features	Order No.
PNOZ mc3p	Fieldbus module, PROFIBUS-DP	773 732

Accessories

Jumper

Product type	Features	Order No.
KOP-XE	Jumper	774 639

Fieldbus modules
PNOZ mc4p



Overview

Unit features

Application of the product PNOZ mc4p:

Expansion module for connection to a base unit from the configurable control system PNOZmulti

The product has the following features:

- Can be configured in the PNOZmulti Configurator
- Connection for DeviceNet
- Station addresses from 0 ... 63 can be selected via DIP switches
- Status indicators for communication with DeviceNet and for errors
- Please refer to the document "PNOZmulti System Expansion" for the PNOZmulti base units that can be connected.
- Coated version:

  Increased environmental requirements (see Technical details [📖 434])

Fieldbus modules
PNOZ mc4p

Front view

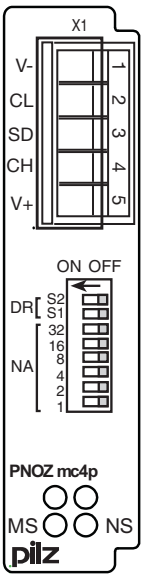

Legend:

- X1: DeviceNet interface (5-pin screw connector)
- LED:
  - Power
  - NS
  - MS

Function description

Operation

The virtual inputs and outputs that are to be transferred via DeviceNet are selected and configured in the PNOZmulti Configurator. The base unit and the expansion module PNOZ mc4p are connected via a jumper. The expansion module PNOZ mc4p is also supplied with voltage via this jumper.

The station address and the transmission rate are set using DIP switches. After the supply voltage is switched on or the PNOZmulti control system is reset, the expansion module PNOZ mc4p is configured and started automatically.

LEDs indicate the status of the expansion module on DeviceNet.

The configuration is described in detail in the PNOZmulti Configurator's online help.

Fieldbus modules
PNOZ mc4p

Input and output data

The data is structured as follows:

- Input area

  The inputs are defined in the master and transferred to the PNOZmulti. Each input has a number, e.g. input bit 4 of byte 1 has the number i12.

- Output range

  The outputs are defined in the PNOZmulti Configurator. Each output that is used is given a number there, e.g. o0, o5... The status of output o0 is stored in bit 0 of byte 0; the status of output o5 is stored in bit 5 of byte 0 etc.

- Output range only: Byte 3

  Bits 0 … 4: Status of LEDs on the PNOZmulti

  – Bit 0: OFAULT
  – Bit 1: IFAULT
  – Bit 2: FAULT
  – Bit 3: DIAG
  – Bit 4: RUN

  Bit 5: Data is being exchanged.

Detailed information on data exchange (tables, segments) is available in the document "Communication Interfaces" in the section entitled "Fieldbus modules".

Assigning the inputs/outputs in the PNOZmulti Configurator to the DeviceNet inputs/outputs

Virtual inputs on PNOZmulti Configurator	i0 ... I7	i8 ... i15	i16 ... i23
Input data DeviceNet	Byte 0: Bits 0 … 7	Byte 1: Bits 0 … 7	Byte 2: Bits 0 … 7
Virtual outputs on PNOZmulti Configurator	o0 ... o7	o8 ... o15	o16 ... o23
Output data DeviceNet	Byte 0: Bits 0 … 7	Byte 1: Bits 0 … 7	Byte 2: Bits 0 … 7

The number of virtual inputs and outputs can be extended to 128 (see document "Communication Interfaces" in the section entitled "Fieldbus modules")

Fieldbus modules
PNOZ mc4p

Block diagram

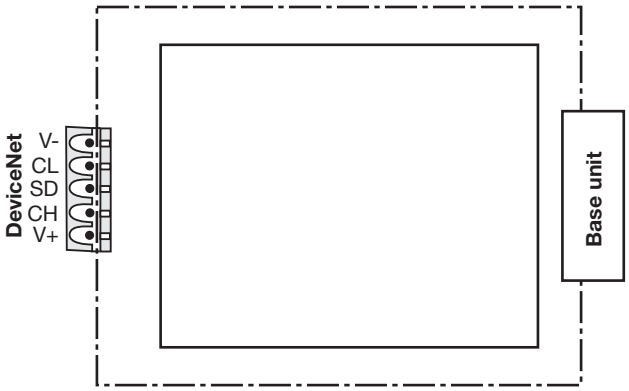

Installation

Dimensions in mm

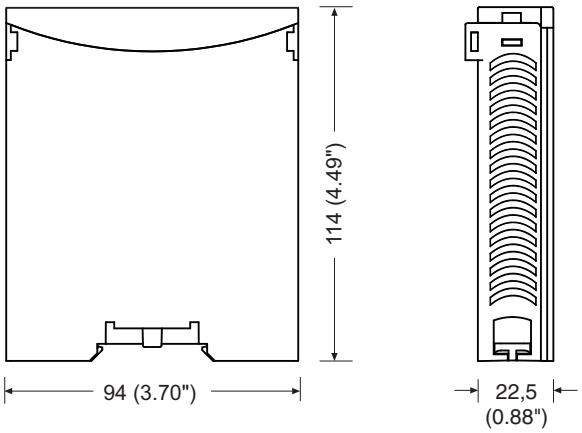

Commissioning

General wiring guidelines

The wiring is defined in the circuit diagram of the PNOZmulti Configurator.

Please note:

- Information given in the Technical details [📖 434] must be followed.
- The position of the expansion module is specified in the Hardware configuration of the PNOZmulti Configurator.

Fieldbus modules
PNOZ mc4p

- Use copper wiring with a temperature stability of 75 °C.
- The power supply must meet the regulations for extra low voltages with protective electrical separation (SELV, PELV).
- Always connect the mounting rail to the protective earth via an earthing terminal. This will be used to dissipate hazardous voltages in the case of a fault.

Connecting the supply voltage

Connect the supply voltage to the base unit:

- Terminal **24 V** and **A1 (+)**: + 24 VDC
- Terminal **0 V** and **A2 (-)**: 0 V

DeviceNet interface

It is possible to define which outputs on the control system will communicate with DeviceNet. The connection to DeviceNet is made via a 5-pin screw connector.

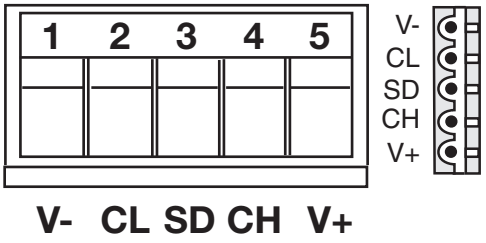

1: V-
2: CL (CAN_L)
3: Cable screening
4: CH (CAN_H)
5: V+

Termination DeviceNet

To minimise cable reflection and to guarantee a defined rest signal on the transmission line, DeviceNetmust be terminated at both ends.

Setting the transmission rate

Set the transmission rate using DIP switches S1 and S2 (DR).

Transmission rate	DIP switch	
	S1	S2
125 kBit/s	Off	Off
250 kBit/s	On	Off
500 kBit/s	Off	On
---	On	On

Fieldbus modules
PNOZ mc4p

Setting the station address

The station address of the expansion module PNOZ mc4p is set from 0 ... 63 (binary) using DIP switches 1 to 32.

Station address	DIP switch					
	32	**16**	**8**	**4**	**2**	**1**
0	Off	Off	Off	Off	Off	Off
1	Off	Off	Off	Off	Off	On
2	Off	Off	Off	Off	On	Off
3	Off	Off	Off	Off	On	On
...	...	...	...	...	...	...
62	On	On	On	On	On	Off
63	On	On	On	On	On	On

Download modified project to the PNOZmulti safety system

As soon as an additional expansion module has been connected to the system, the project must be amended in the PNOZmulti Configurator and downloaded back into the base unit. Proceed as described in the operating manual for the base unit.

Connection example

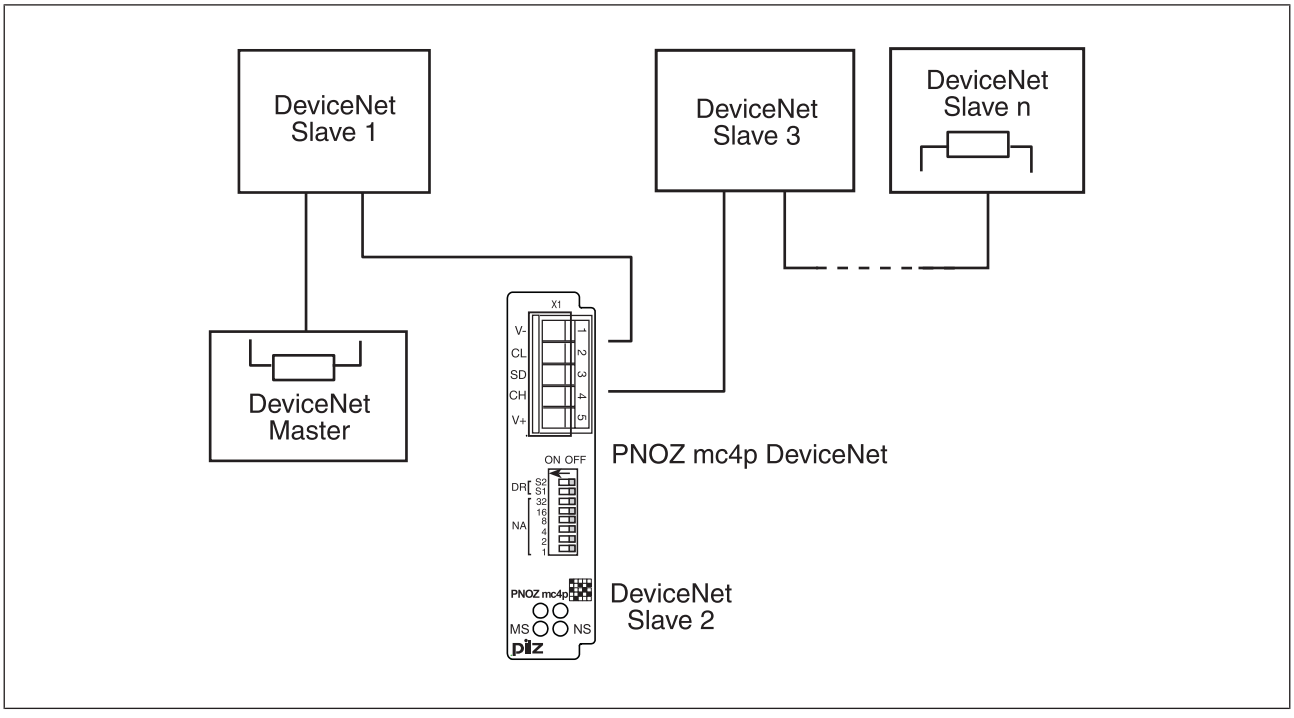

Fieldbus modules
PNOZ mc4p

Technical Details

General	773711	773729
Certifications	CCC, CE, EAC (Eurasian), KCC, KOSHA, TÜV, cULus Listed	CCC, CE, EAC (Eurasian), KCC, KOSHA, TÜV, cULus Listed
Electrical data	**773711**	**773729**
Supply voltage		
for	Module supply	Module supply
internal	Via base unit	Via base unit
Voltage	5 V	5 V
Kind	DC	DC
Voltage tolerance	-2 %/+2 %	-2 %/+2 %
Power consumption	1 W	1,6 W
Status indicator	LED	LED
Fieldbus interface	**773711**	**773729**
Fieldbus interface	DeviceNet	DeviceNet
External supply (DC)	24 V	24 V
Power consumption	0,75 W	0,75 W
Device type	Slave	Slave
Station address	0 ... 63d	0 ... 63d
Transmission rates	125 kBit/s, 250 kBit/s, 500 kBit/s	125 kBit/s, 250 kBit/s, 500 kBit/s
Connection	5-pin Combicon plug-in connector	5-pin Combicon plug-in connector
Galvanic isolation	yes	yes
Test voltage	500 V AC	500 V AC
Times	**773711**	**773729**
Supply interruption before de-energisation	20 ms	20 ms
Environmental data	**773711**	**773729**
Ambient temperature		
In accordance with the standard	EN 60068-2-14	EN 60068-2-14
Temperature range	0 - 60 °C	0 - 50 °C
Storage temperature		
In accordance with the standard	EN 60068-2-1/-2	EN 60068-2-1/-2
Temperature range	-25 - 70 °C	-25 - 70 °C
Climatic suitability		
In accordance with the standard	EN 60068-2-30, EN 60068-2-78	EN 60068-2-30, EN 60068-2-78
Humidity	93 % r. h. at 40 °C	93 % r. h. at 40 °C
Condensation during operation	Not permitted	Short-term
EMC	EN 61131-2	EN 61131-2

Fieldbus modules
PNOZ mc4p

Environmental data	773711	773729
Vibration		
In accordance with the standard	**EN 60068-2-6**	**EN 60068-2-6**
Frequency	**10 - 150 Hz**	**10 - 150 Hz**
Acceleration	**1g**	**1g**
Shock stress		
In accordance with the standard	**EN 60068-2-27**	**EN 60068-2-27**
Acceleration	**15g**	**15g**
Duration	**11 ms**	**11 ms**
Max. operating height above sea level	**2000 m**	**2000 m**
Airgap creepage		
In accordance with the standard	**EN 61131-2**	**EN 61131-2**
Overvoltage category	**III**	**III**
Pollution degree	**2**	**2**
Rated insulation voltage	**30 V**	**30 V**
Protection type		
In accordance with the standard	**EN 60529**	**EN 60529**
Mounting area (e.g. control cabinet)	**IP54**	**IP54**
Housing	**IP20**	**IP20**
Terminals	**IP20**	**IP20**
Mechanical data	**773711**	**773729**
Mounting position	**horizontally on mounting rail**	**horizontally on mounting rail**
DIN rail		
Top hat rail	**35 x 7,5 EN 50022**	**35 x 7,5 EN 50022**
Recess width	**27 mm**	**27 mm**
Material		
Bottom	**PPO UL 94 V0**	**PPO UL 94 V0**
Front	**ABS UL 94 V0**	**ABS UL 94 V0**
Dimensions		
Height	**94 mm**	**94 mm**
Width	**22,5 mm**	**22,5 mm**
Depth	**122 mm**	**122 mm**
Weight	**110 g**	**143 g**

Where standards are undated, the 2020-07 latest editions shall apply.

Fieldbus modules
PNOZ mc4p

Order reference

Product

Product type	Features	Order No.
PNOZ mc4p	Fieldbus module, DeviceNet	773 711
PNOZ mc4p coated version	Fieldbus module, DeviceNet, coated version	773 729

Accessories

Jumper

Product type	Features	Order No.
KOP-XE	Jumper	774 639

Fieldbus modules
PNOZ mc5p



Overview

Unit features

Application of the product PNOZ mc5p:

Expansion module for connection to a base unit from the PNOZmulti system.

The product has the following features:

- Can be configured in the PNOZmulti Configurator
- Connection for INTERBUS
- Transmission rate, selectable between 500 kBit/s and 2 MBit/s
- Status indicators for communication with INTERBUS and for errors
- Max. 1 PNOZ mc5p can be connected to the base unit
- In the PNOZmulti Configurator, 24 inputs (standard) and 24 outputs (standard) can be configured for communication via a fieldbus.
- Please refer to the document "PNOZmulti System Expansion" for the PNOZmulti base units that can be connected.

Fieldbus modules
PNOZ mc5p

Front view

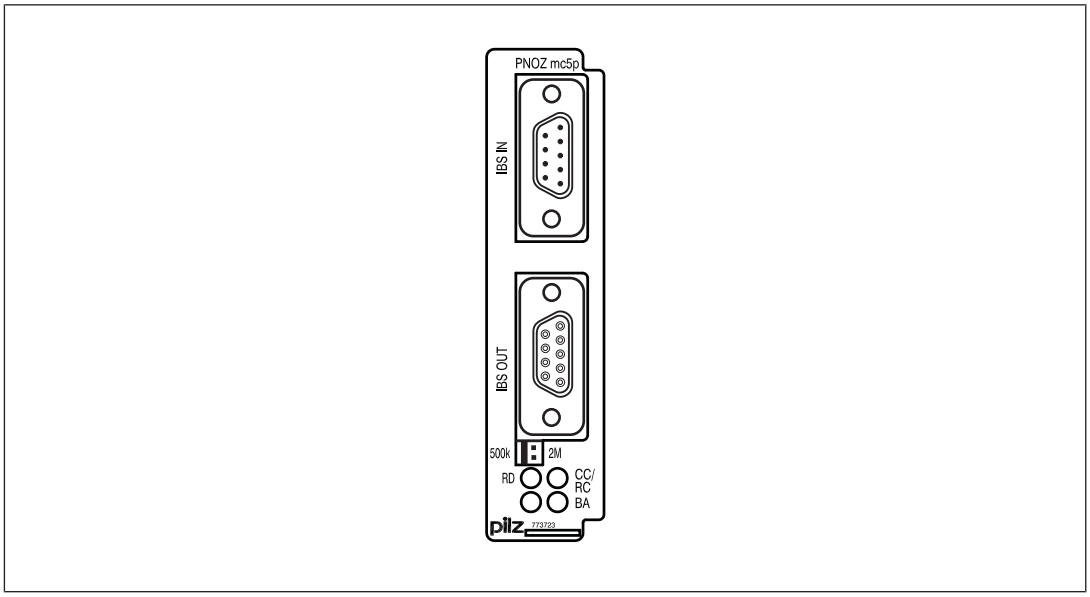

Function description

Functions

The data to be transferred via INTERBUS is selected and configured in the PNOZmulti Configurator. The base unit and PNOZ fieldbus module PNOZ mc5p are connected via a jumper. The fieldbus module is also supplied with voltage PNOZ mc5p via this jumper. After the supply voltage is switched on or the safety system PNOZmulti is reset, the fieldbus module PNOZ mc5p is configured and started automatically.

Input and output data

The data is structured as follows:

- Input area

  The inputs are defined in the master and transferred to the PNOZmulti. Each input has a number, e.g. input bit 4 of byte 1 has the number i12.

- Output range

  The outputs are defined in the PNOZmulti Configurator. Each output that is used is given a number there, e.g. o0, o5... The status of output o0 is stored in bit 0 of byte 0; the status of output o5 is stored in bit 5 of byte 0 etc.

- Output range only: Byte 3

  Bits 0 … 4: Status of LEDs on the PNOZmulti

  – Bit 0: OFAULT

  – Bit 1: IFAULT

Fieldbus modules
PNOZ mc5p

– Bit 2: FAULT
– Bit 3: DIAG
– Bit 4: RUN

Bit 5: Data is being exchanged.

Detailed information on data exchange (tables, segments) is available in the document "Communication Interfaces" in the section entitled "Fieldbus modules".

Assigning the inputs/outputs in the PNOZmulti Configurator to the INTERBUS inputs/outputs

Virtual inputs on PNOZmulti Configurator	i0 ... I7	i8 ... i15	i16 ... i23
Input data INTERBUS	Byte 0: Bits 0 … 7	Byte 1: Bits 0 … 7	Byte 2: Bits 0 … 7
Virtual outputs on PNOZmulti Configurator	o0 ... o7	o8 ... o15	o16 ... o23
Output data INTERBUS	Byte 0: Bits 0 … 7	Byte 1: Bits 0 … 7	Byte 2: Bits 0 … 7

The number of virtual inputs and outputs can be extended to 128 (see document "Communication Interfaces" in the section entitled "Fieldbus modules")

Block diagram

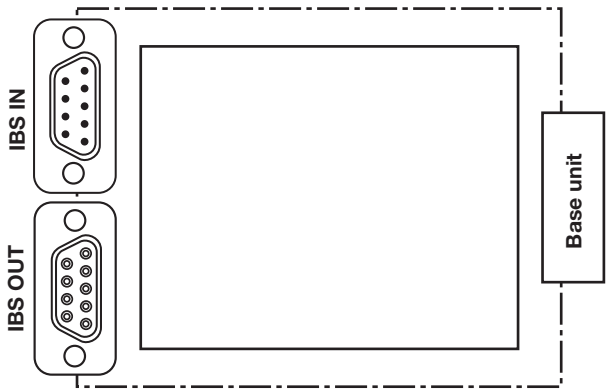

Fieldbus modules
PNOZ mc5p

Installation

Dimensions in mm

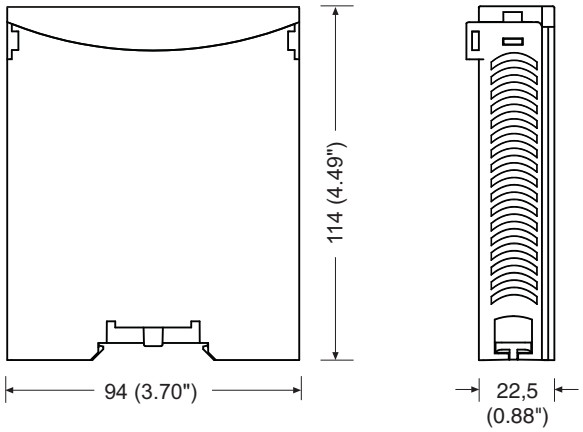

Commissioning

Preparing for commissioning

The wiring is defined in the circuit diagram of the PNOZmulti Configurator.

It is possible to define which outputs on the safety system will communicate with INTERBUS. The connection to INTERBUS is made via two female 9-pin D-Sub screw connectors

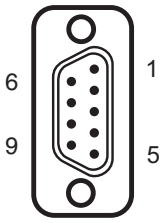

1: DO1
2: DI1
3: GND
4: n.c.
5: n.c.
6: /DO1
7: /DI1
8: n.c.
9: n.c.

IBS IN

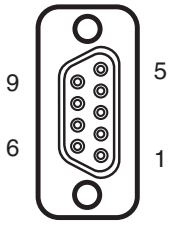

1: DO2
2: DI2
3: GND
4: n.c.
5: GND
6: /DO2
7: /DI2
8: n.c.
9: RBST

IBS OUT

n. c. = not connected

Fieldbus modules
PNOZ mc5p

Please note:

- Information given in the "Technical details" must be followed.
- Use copper wiring with a temperature stability of 75 °C.

Please note the following when connecting to INTERBUS:

- Only use metal plugs or metallised plastic plugs
- Twisted pair, screened cable must be used to connect the interfaces

Setting the transmission rate

The transmission rate is set using a jumper. You can choose between 500 kBit/s and 2 MBit/s.

500 kBit/s:	
2 MBit/s	

Connecting the supply voltage

Connect the supply voltage to the base unit:

- Terminal **24 V** and **A1 (+)**: + 24 VDC
- Terminal **0 V** and **A2 (-)**: 0 V

Download modified project to the PNOZmulti safety system

As soon as an additional expansion module has been connected to the system, the project must be amended in the PNOZmulti Configurator and downloaded back into the base unit. Proceed as described in the operating manual for the base unit.

Fieldbus modules
PNOZ mc5p

Connection example

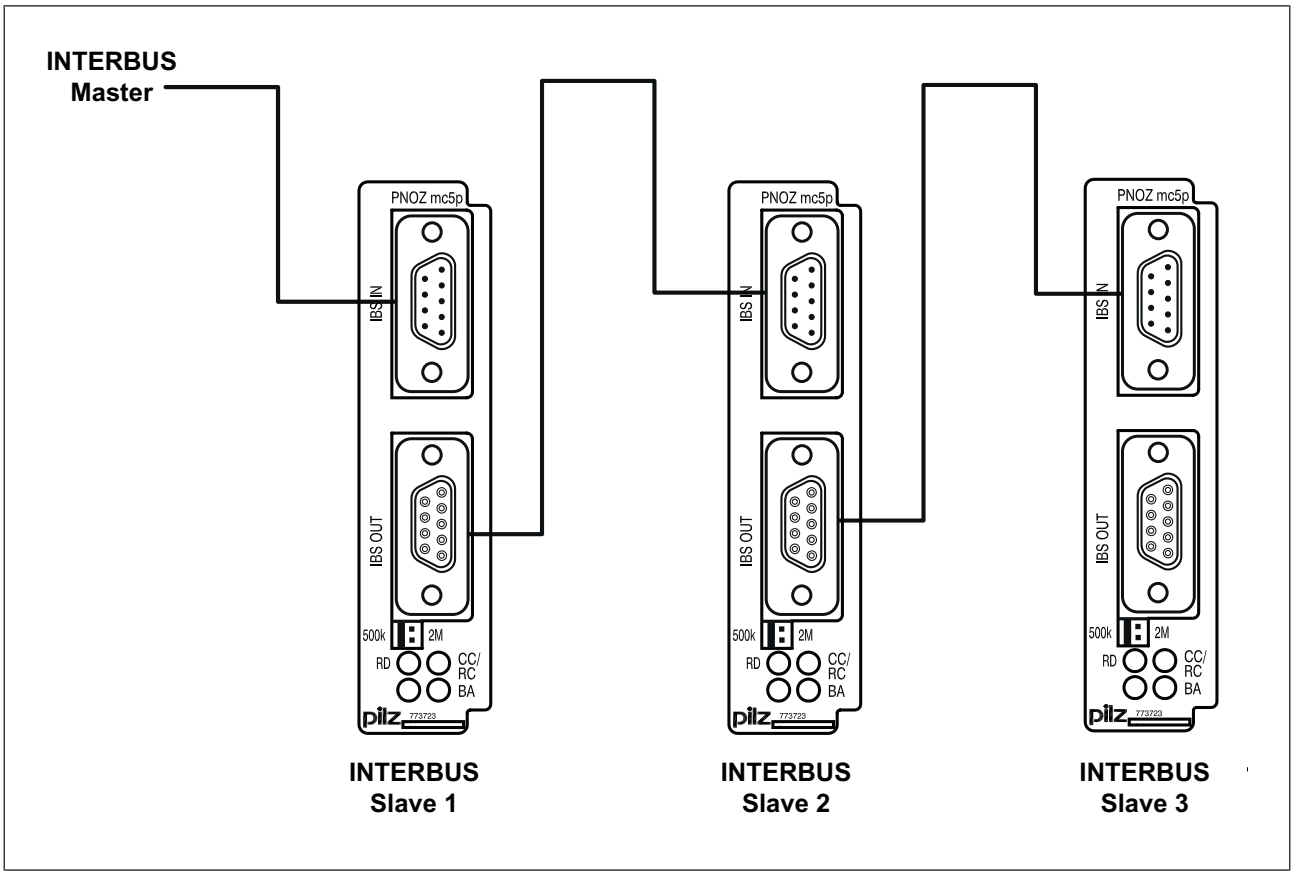

Technical Details

General	
Certifications	**CCC, CE, EAC (Eurasian), KCC, KOSHA, TÜV, cU-Lus Listed**
Electrical data	
Supply voltage	
for	**Module supply**
internal	**Via base unit**
Voltage	**5 V**
Kind	**DC**
Voltage tolerance	**-2 %/+2 %**
Power consumption	**2,5 W**
Status indicator	**LED**
Fieldbus interface	
Fieldbus interface	**INTERBUS-S**
Device type	**Slave**

Fieldbus modules
PNOZ mc5p

Fieldbus interface	
Transmission rates	**2 MBit/s, 500 kBit/s**
Connection IBS IN	**9-pin D-Sub male connector**
Connection IBS OUT	**9-pin D-Sub female connector**
Galvanic isolation	**yes**
Test voltage	**500 V AC**
Times	
Supply interruption before de-energisation	**20 ms**
Environmental data	
Ambient temperature	
In accordance with the standard	**EN 60068-2-14**
Temperature range	**0 - 55 °C**
Storage temperature	
In accordance with the standard	**EN 60068-2-1/-2**
Temperature range	**-25 - 70 °C**
Climatic suitability	
In accordance with the standard	**EN 60068-2-30, EN 60068-2-78**
Humidity	**93 % r. h. at 40 °C**
Condensation during operation	**Not permitted**
Max. operating height above sea level	**2000 m**
EMC	**EN 61131-2**
Vibration	
In accordance with the standard	**EN 60068-2-6**
Frequency	**10 - 150 Hz**
Acceleration	**1g**
Shock stress	
In accordance with the standard	**EN 60068-2-27**
Acceleration	**15g**
Duration	**11 ms**
Airgap creepage	
In accordance with the standard	**EN 61131-2**
Overvoltage category	**III**
Pollution degree	**2**
Rated insulation voltage	**30 V**
Protection type	
In accordance with the standard	**EN 60529**
Housing	**IP20**
Terminals	**IP20**
Mounting area (e.g. control cabinet)	**IP54**
Mechanical data	
Mounting position	**horizontally on mounting rail**

Fieldbus modules
PNOZ mc5p

Mechanical data	
DIN rail	
Top hat rail	**35 x 7,5 EN 50022**
Recess width	**27 mm**
Material	
Bottom	**PPO UL 94 V0**
Front	**ABS UL 94 V0**
Dimensions	
Height	**94 mm**
Width	**22,5 mm**
Depth	**119 mm**
Weight	**155 g**

Where standards are undated, the 2020-07 latest editions shall apply.

Order reference

Product

Product type	Features	Order No.
PNOZ mc5p	Fieldbus module, INTERBUS	773 723

Accessories

Jumper

Product type	Features	Order No.
KOP-XE	Jumper	774 639

Fieldbus modules
PNOZ mc5.1p



Overview

Unit features

Application of the product PNOZ mc5.1p:

Expansion module for connection to a base unit from the PNOZmulti system.

The product has the following features:

- Can be configured in the PNOZmulti Configurator
- Connection for INTERBUS with fibre-optic cable
- Transmission rate, selectable between 500 kBit/s and 2 MBit/s
- Status indicators for communication with INTERBUS and for errors
- F-SMA connection technology
- Max. 1 PNOZ mc5.1p can be connected to the base unit
- In the PNOZmulti Configurator, 24 inputs (standard) and 24 outputs (standard) can be configured for communication via a fieldbus.
- Please refer to the document "PNOZmulti System Expansion" for the PNOZmulti base units that can be connected.

Fieldbus modules
PNOZ mc5.1p

Front view

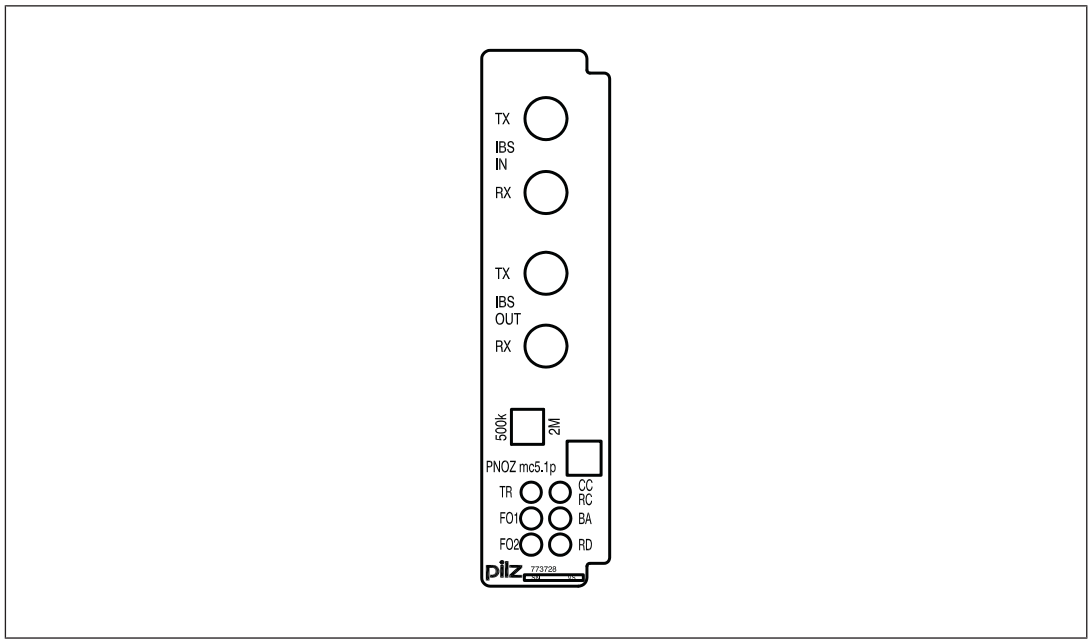

Legend

IBS IN	Remote bus IN
TX	Transmitter
RX	Receiver
IBS OUT	Remote bus OUT
TX	Transmitter
RX	Receiver
LEDs:	CR/CC, BA, RD, TR, FO1, FO2

Function description

Functions

The data to be transferred via INTERBUS LWL is selected and configured in the PNOZmulti Configurator. The base unit and PNOZ fieldbus module PNOZ mc5.1p are connected via a jumper. The fieldbus module is also supplied with voltage PNOZ mc5.1p via this jumper. After the supply voltage is switched on or the safety system PNOZmulti is reset, the fieldbus module PNOZ mc5.1p is configured and started automatically.

Fieldbus modules
PNOZ mc5.1p

Input and output data

The data is structured as follows:

- Input area

  The inputs are defined in the master and transferred to the PNOZmulti. Each input has a number, e.g. input bit 4 of byte 1 has the number i12.

- Output range

  The outputs are defined in the PNOZmulti Configurator. Each output that is used is given a number there, e.g. o0, o5... The status of output o0 is stored in bit 0 of byte 0; the status of output o5 is stored in bit 5 of byte 0 etc.

- Output range only: Byte 3

  Bits 0 … 4: Status of LEDs on the PNOZmulti

  – Bit 0: OFAULT
  – Bit 1: IFAULT
  – Bit 2: FAULT
  – Bit 3: DIAG
  – Bit 4: RUN

  Bit 5: Data is being exchanged.

Detailed information on data exchange (tables, segments) is available in the document "Communication Interfaces" in the section entitled "Fieldbus modules".

Assigning the inputs/outputs in the PNOZmulti Configurator to the INTERBUS inputs/outputs

Virtual inputs on PNOZmulti Configurator	i0 ... I7	i8 ... i15	i16 ... i23
Input data INTERBUS LWL	Byte 0: Bits 0 … 7	Byte 1: Bits 0 … 7	Byte 2: Bits 0 … 7
Virtual outputs on PNOZmulti Configurator	o0 ... o7	o8 ... o15	o16 ... o23
Output data INTERBUS LWL	Byte 0: Bits 0 … 7	Byte 1: Bits 0 … 7	Byte 2: Bits 0 … 7

The number of virtual inputs and outputs can be extended to 128 (see document "Communication Interfaces" in the section entitled "Fieldbus modules")

Fieldbus modules
PNOZ mc5.1p

Block diagram

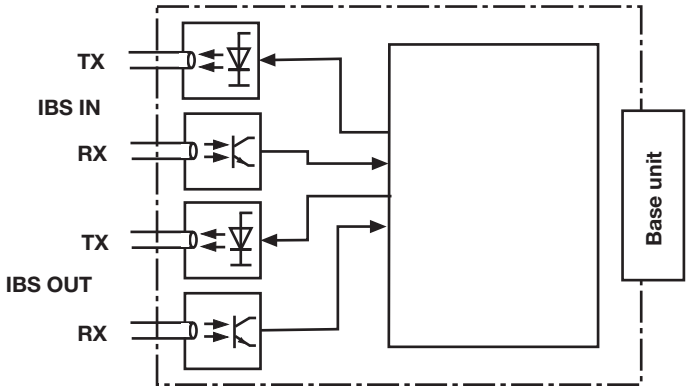

Installation

Dimensions in mm

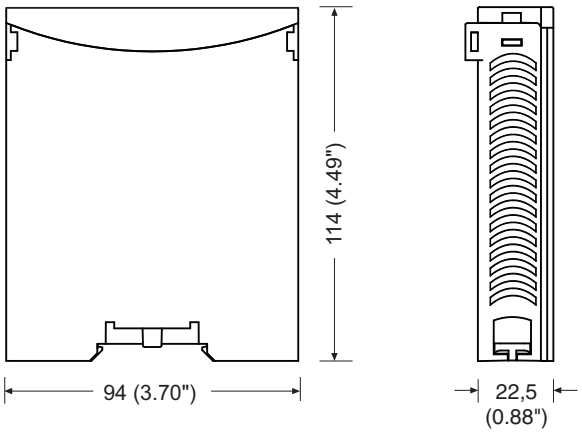

Commissioning

Preparing for commissioning

Please note the following when preparing for commissioning:

The fieldbus module PNOZ mc5.1p features F-SMA connection technology for fibre-optic cables. The visible light of the FO sender LED presents no danger to human skin or eyes. Do, however, avoid extended periods of direct eye contact with the LED.

Fieldbus modules
PNOZ mc5.1p

Use only the following fibre-optic cables:

- Polymer fibre, fibre type 980/1000 µm
- HCS fibre, fibre type 200/230 µm

Preparing for operation

- Connect fibre-optic cable
  - Connect the FO cable to the F-SMA plug-in connector on the transmitter and receiver.
  - Hand-tighten the union nut in a clockwise direction.

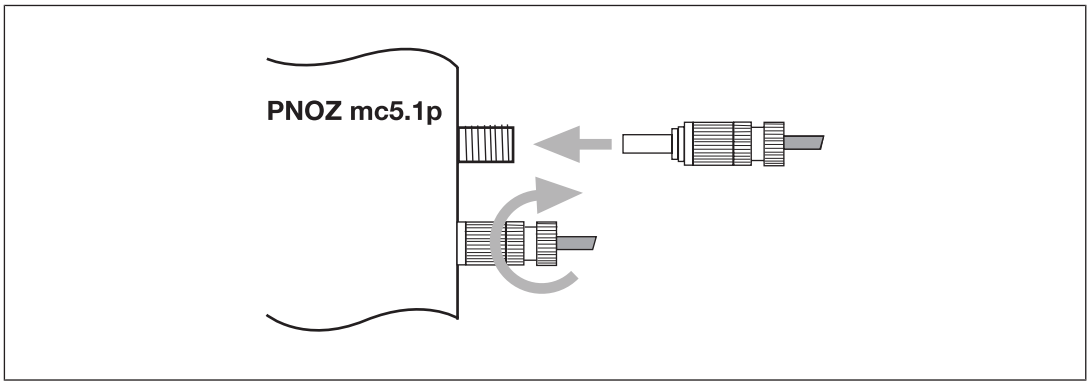

- Connect the TX transmitter of the IBS OUT remote bus to the RX receiver of the IBS IN remote bus.
- Connect the RX receiver of the IBS OUT remote bus to the TX transmitter of the IBS IN remote bus.

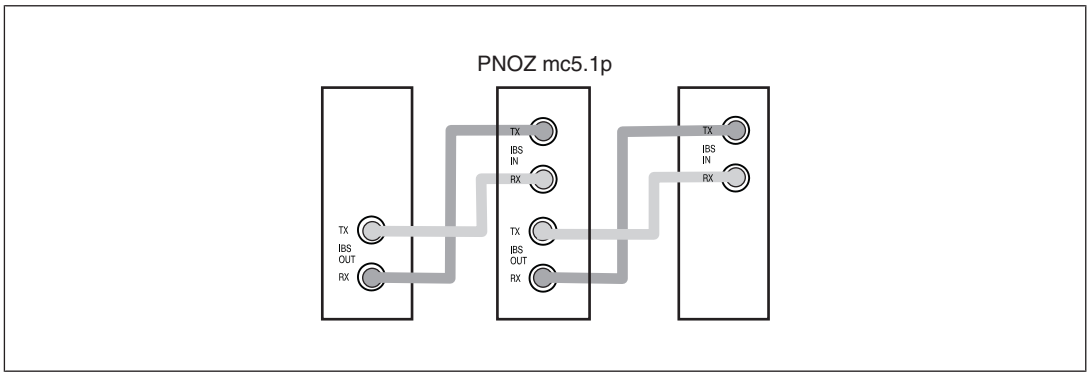

Fieldbus modules
PNOZ mc5.1p

INTERBUS interface

It is possible to define which inputs and outputs on the safety system will communicate with INTERBUS FO. The PNOZ mc5.1p features RX and TX F-SMA screw connections for IBS IN and RX and TX for IBS OUT for connecting to the INTERBUS FO.

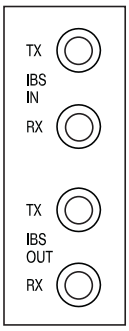

IBS IN: Remote bus IN
TX: Transmitter
RX: Receiver

IBS OUT: Remote bus OUT
TX: Transmitter
RX: Receiver

Setting the transmission rate

The transmission rate is set using a jumper. You can choose between 500 kBit/s and 2 MBit/s.

500 kBit/s:	500k  2M
2 MBit/s	500k  2M

Connecting the supply voltage

Connect the supply voltage to the base unit:

- Terminal **24 V** and **A1 (+)**: + 24 VDC
- Terminal **0 V** and **A2 (-)**: 0 V

Download modified project to the PNOZmulti safety system

As soon as an additional expansion module has been connected to the system, the project must be amended in the PNOZmulti Configurator and downloaded back into the base unit. Proceed as described in the operating manual for the base unit.

Fieldbus modules
PNOZ mc5.1p

Connection example

The sender and receiver of the incoming and outgoing remote buses are configured in a crossover formation. Cover unused connections with a protective cap.

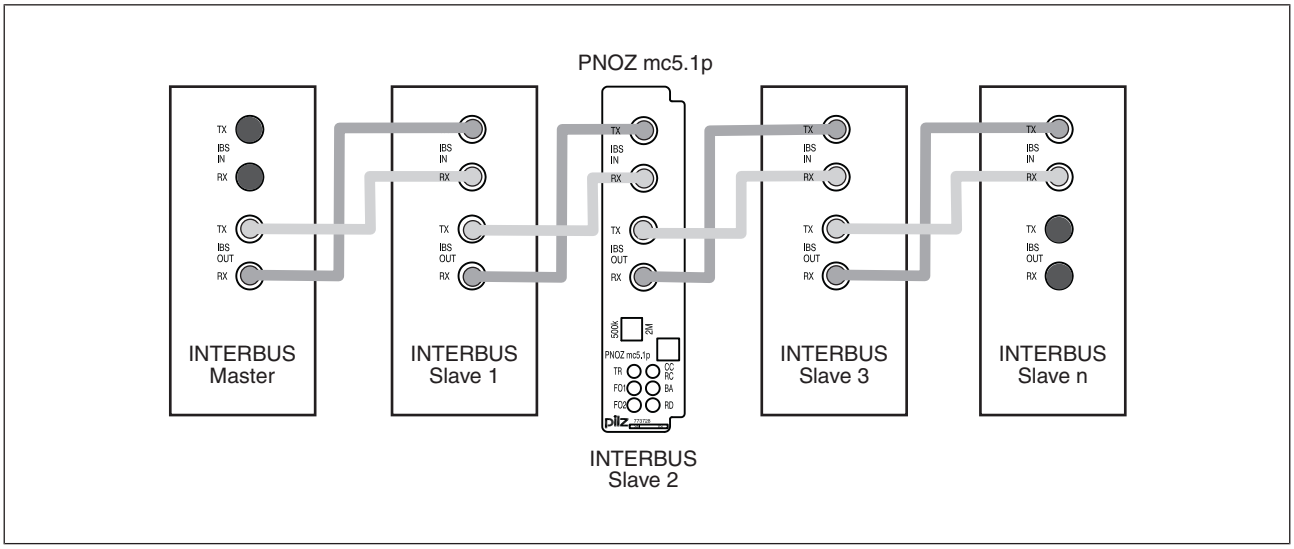

Technical Details

General	
Certifications	**CCC, CE, EAC (Eurasian), KCC, KOSHA, TÜV, cU-Lus Listed**
Electrical data	
Supply voltage	
for	**Module supply**
internal	**Via base unit**
Voltage	**5 V**
Kind	**DC**
Voltage tolerance	**-2 %/+2 %**
Power consumption	**2 W**
Status indicator	**LED**
Fieldbus interface	
Fieldbus interface	**INTERBUS LWL**
Device type	**Slave**
Transmission rates	**2 MBit/s, 500 kBit/s**
Connection	**F-SMA connector**
Times	
Supply interruption before de-energisation	**20 ms**

Fieldbus modules
PNOZ mc5.1p

Environmental data	
Ambient temperature	
In accordance with the standard	**EN 60068-2-14**
Temperature range	**0 - 55 °C**
Storage temperature	
In accordance with the standard	**EN 60068-2-1/-2**
Temperature range	**-25 - 70 °C**
Climatic suitability	
In accordance with the standard	**EN 60068-2-30, EN 60068-2-78**
Humidity	**93 % r. h. at 40 °C**
Condensation during operation	**Not permitted**
EMC	**EN 61131-2**
Vibration	
In accordance with the standard	**EN 60068-2-6**
Frequency	**10 - 150 Hz**
Acceleration	**1g**
Shock stress	
In accordance with the standard	**EN 60068-2-27**
Acceleration	**15g**
Duration	**11 ms**
Max. operating height above sea level	**2000 m**
Airgap creepage	
In accordance with the standard	**EN 61131-2**
Overvoltage category	**III**
Pollution degree	**2**
Rated insulation voltage	**30 V**
Protection type	
In accordance with the standard	**EN 60529**
Mounting area (e.g. control cabinet)	**IP54**
Housing	**IP20**
Terminals	**IP20**
Mechanical data	
Mounting position	**horizontally on mounting rail**
DIN rail	
Top hat rail	**35 x 7,5 EN 50022**
Recess width	**27 mm**
Material	
Bottom	**PPO UL 94 V0**
Front	**ABS UL 94 V0**

Fieldbus modules
PNOZ mc5.1p

Mechanical data	
Dimensions	
Height	**94 mm**
Width	**22,5 mm**
Depth	**121 mm**
Weight	**145 g**

Where standards are undated, the 2020-07 latest editions shall apply.

Order reference

Product

Product type	Features	Order No.
PNOZ mc5.1p	Fieldbus module, INTERBUS FO	773 728

Accessories

Jumper

Product type	Features	Order No.
KOP-XE	Jumper	774 639

Fieldbus modules
PNOZ mc6p/mc6.1p



Overview

Unit features

Application of the product PNOZ mc6p/mc6.1p:

Expansion module for connection to a base unit from the configurable control system PNOZmulti

The product has the following features:

- Can be configured in the PNOZmulti Configurator
- Connection for CANopen
- Station addresses from 0 ... 99, selected via rotary switch
- Transmission rate selected via rotary switch (1 MBit/s, 10 kbit/s, 125 kBit/s, 20 kbit/s, 250 kBit/s, 50 kbit/s, 500 kBit/s, 800 kbit/s)
- Status indicators for communication with CANopen and for errors
- Supported protocols:

  PNOZ mc6p: CiA DS-301 V3.0

  PNOZ mc6.1p: CiA DS-301 V4.0.2
- **PNOZ mc6.1p**: Default COB-ID has been adapted for RPDO 3 (400 h) and TPDO 3 (380 h)
- 24 virtual inputs and outputs on the control system PNOZmulti can be defined in the PNOZmulti Configurator for communication with the fieldbus CANopen . The number of inputs and outputs can be extended to 128. Please note that when the extended inputs and outputs 24 - 127 are used they have different properties (see document entitled "Communication Interfaces").
- Max. 1 PNOZ mc6p/mc6.1p can be connected to the base unit
- Please refer to the document "PNOZmulti System Expansion" for the PNOZmulti base units that can be connected.
- Coated version:

  Increased environmental requirements (see Technical details [📖 461])

Fieldbus modules
PNOZ mc6p/mc6.1p

Front view

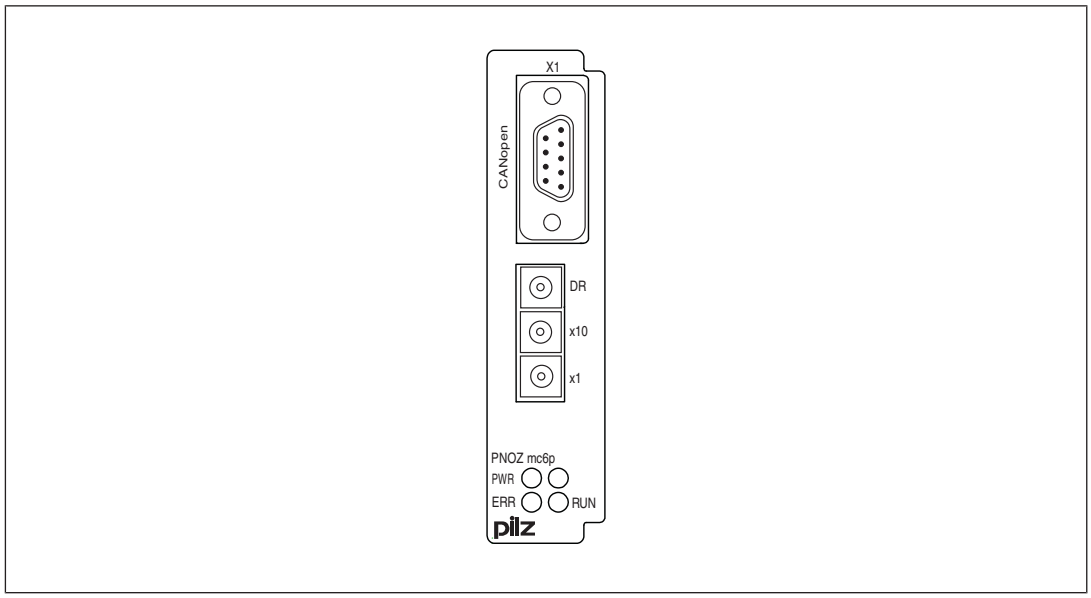

Key

- X1: CANopen interface (male 9-pin D-Sub connector)
- LED:
  - Power
  - Run
  - Error

Function description

Operation

The virtual inputs and outputs that are to be transferred via CANopen are selected and configured in the PNOZmulti Configurator. The base unit and the expansion module PNOZ mc6p/mc6.1p are connected via a jumper. The station address and the transmission rate are set using rotary switches. The fieldbus module is also supplied with voltage via this jumper. After the supply voltage is switched on or the PNOZmulti control system is reset, the expansion module PNOZ mc6p/mc6.1p is configured and started automatically.

LEDs indicate the status of the expansion module on CANopen.

The configuration is described in detail in the PNOZmulti Configurator's online help.

Fieldbus modules
PNOZ mc6p/mc6.1p

Input and output data

The data is structured as follows:

- Input area

  The inputs are defined in the master and transferred to the PNOZmulti. Each input has a number, e.g. input bit 4 of byte 1 has the number i12.

- Output range

  The outputs are defined in the PNOZmulti Configurator. Each output that is used is given a number there, e.g. o0, o5... The status of output o0 is stored in bit 0 of byte 0; the status of output o5 is stored in bit 5 of byte 0 etc.

- Output range only: Byte 3

  Bits 0 … 4: Status of LEDs on the PNOZmulti

  – Bit 0: OFAULT
  – Bit 1: IFAULT
  – Bit 2: FAULT
  – Bit 3: DIAG
  – Bit 4: RUN

  Bit 5: Data is being exchanged.

Detailed information on data exchange (tables, segments) is available in the document "Communication Interfaces" in the section entitled "Fieldbus modules".

Assigning the inputs/outputs in the PNOZmulti Configurator to the CANopen inputs/outputs

Virtual inputs on PNOZmulti Configurator	i0 ... I7	i8 ... i15	i16 ... i23
Input data CANopen	Byte 0: Bits 0 … 7	Byte 1: Bits 0 … 7	Byte 2: Bits 0 … 7
Virtual outputs on PNOZmulti Configurator	o0 ... o7	o8 ... o15	o16 ... o23
Output data CANopen	Byte 0: Bits 0 … 7	Byte 1: Bits 0 … 7	Byte 2: Bits 0 … 7

The number of virtual inputs and outputs can be extended to 128 (see document "Communication Interfaces" in the section entitled "Fieldbus modules")

Fieldbus modules
PNOZ mc6p/mc6.1p

Block diagram

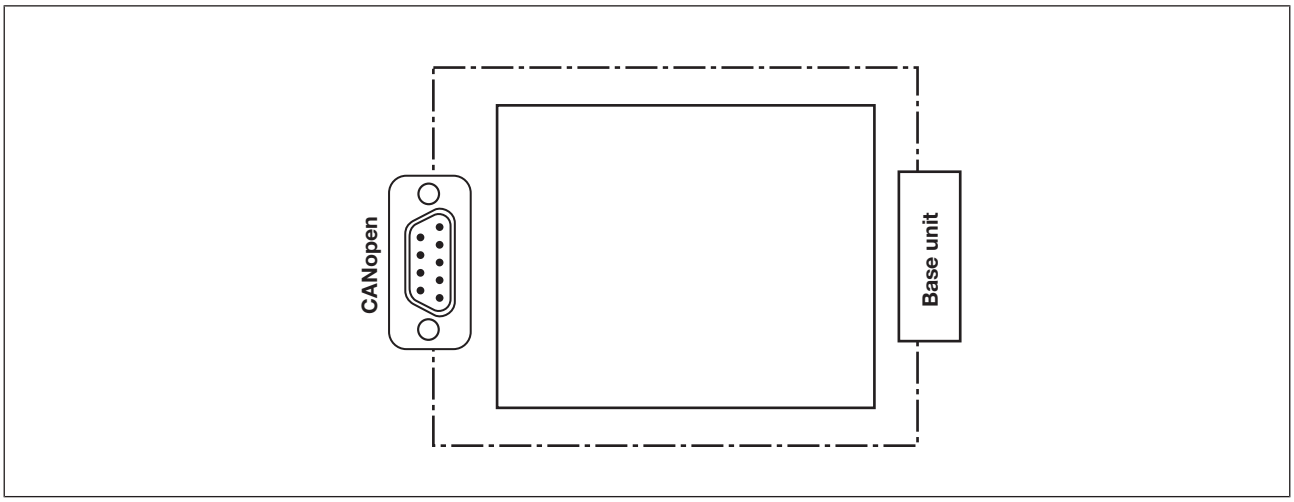

Installation

Dimensions in mm

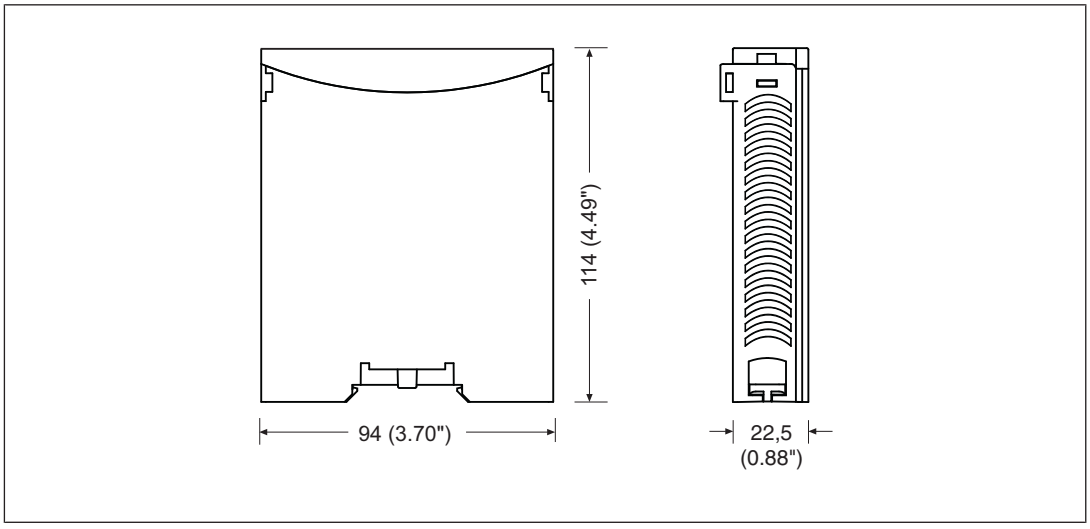

Commissioning

General wiring guidelines

The wiring is defined in the circuit diagram of the PNOZmulti Configurator.

Please note:

- Information given in the Technical details [📖 461] must be followed.
- The position of the expansion module is specified in the Hardware configuration of the PNOZmulti Configurator.
- Use copper wiring with a temperature stability of 75 °C.
- Always connect the mounting rail to the protective earth via an earthing terminal. This will be used to dissipate hazardous voltages in the case of a fault.
- The power supply must meet the regulations for extra low voltages with protective electrical separation (SELV, PELV).

Connecting the supply voltage

Connect the supply voltage to the base unit:

- Terminal **24 V** and **A1 (+)**: + 24 VDC
- Terminal **0 V** and **A2 (-)**: 0 V

CANopen interface

The connection to CANopen is made via a male 9-pin D-Sub connector.

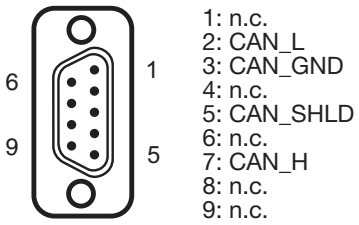

1: n.c.
2: CAN_L
3: CAN_GND
4: n.c.
5: CAN_SHLD
6: n.c.
7: CAN_H
8: n.c.
9: n.c.

n.c. = not connected

Please note the following when connecting to CANopen:

- Only use metal plugs or metallised plastic plugs
- Twisted pair, screened cable must be used to connect the interfaces

CANopen termination

To minimise cable reflection and to guarantee a defined rest signal on the transmission line, CANopen must be terminated at both ends.

Fieldbus modules
PNOZ mc6p/mc6.1p

Preparing for operation

Setting the transmission rate

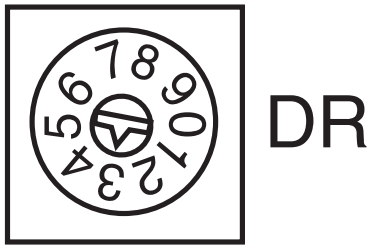

- On the upper rotary switch DR, use a small screwdriver to set the transmission rate (in the example, "3" corresponds to 50 kBit/s).

Switch setting	0	1	2	3	4	5	6	7	8	9
Transmission rate	-	10 kBit/s	20 kBit/s	50 kBit/s	125 kBit/s	250 kBit/s	500 kBit/s	800 kBit/s	1 MBit/s	-

Setting the station address

The station address of the expansion module PNOZ mc6p/mc6.1p is set between 0 ... 99 (decimal) via two rotary switches x1 and x10.

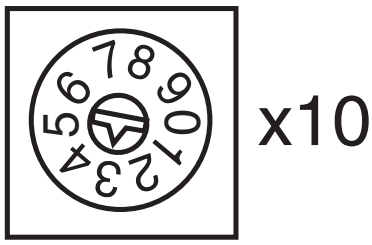

- On the middle rotary switch x10, use a small screwdriver to set the tens digit for the address (“3” in the example).

Fieldbus modules
PNOZ mc6p/mc6.1p

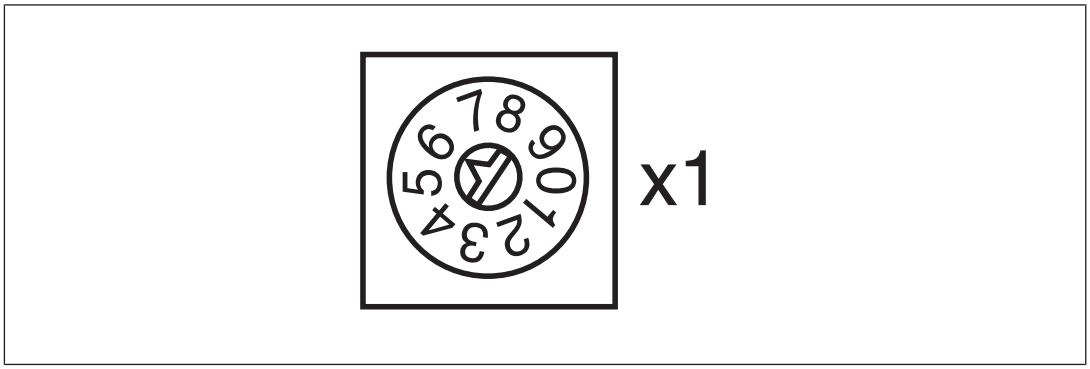

- On the lower rotary switch x1, set the ones digit for the address (“6” in the example).

Station address 36 is set in the diagrams as an example.

Download modified project to the PNOZmulti safety system

As soon as an additional expansion module has been connected to the system, the project must be amended in the PNOZmulti Configurator and downloaded back into the base unit. Proceed as described in the operating manual for the base unit.

Connection example

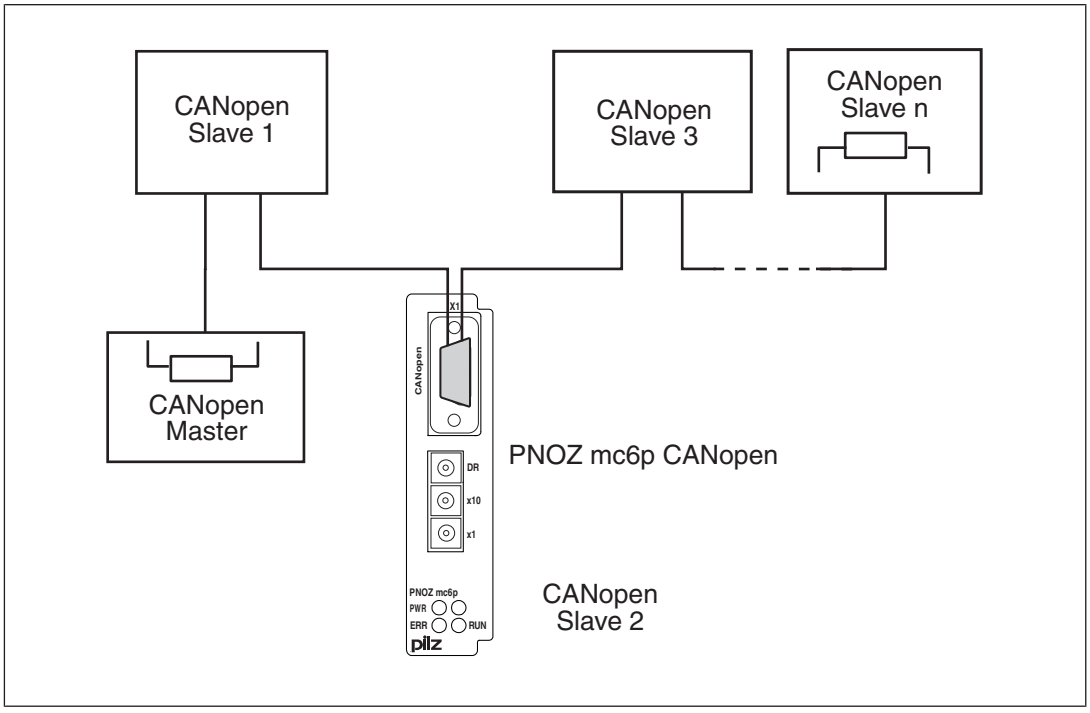

Fieldbus modules
PNOZ mc6p/mc6.1p

Technical details

General	773712	773727	773733
Certifications	CE, EAC (Eurasian), KCC, KOSHA, TÜV, cULus Listed	CCC, CE, EAC (Eurasian), KCC, KOSHA, TÜV, cULus Listed	CCC, CE, EAC (Eurasian), cULus Listed
Electrical data	**773712**	**773727**	**773733**
Supply voltage			
for	Module supply	Module supply	Module supply
internal	Via base unit	Via base unit	Via base unit
Voltage	5 V	5 V	5 V
Kind	DC	DC	DC
Voltage tolerance	-2 %/+2 %	-2 %/+2 %	-2 %/+2 %
Power consumption	1 W	2,5 W	1 W
Status indicator	LED	LED	LED
Fieldbus interface	**773712**	**773727**	**773733**
Fieldbus interface	CANopen	CANopen	CANopen
Device type	Slave	Slave	Slave
Log	CiA DS-301 V3.0	CiA DS-301 V3.0	CiA DS-301 V4.02
Station address	0 - 99d	0 - 99d	0 - 99d
Transmission rates	1 MBit/s, 10 kbit/s, 125 kBit/s, 20 kbit/s, 250 kBit/s, 50 kbit/s, 500 kBit/s, 800 kbit/s	1 MBit/s, 10 kbit/s, 125 kBit/s, 20 kbit/s, 250 kBit/s, 50 kbit/s, 500 kBit/s, 800 kbit/s	1 MBit/s, 10 kbit/s, 125 kBit/s, 20 kbit/s, 250 kBit/s, 50 kbit/s, 500 kBit/s, 800 kbit/s
Connection	9-pin D-Sub male connector	9-pin D-Sub male connector	9-pin D-Sub male connector
Galvanic isolation	yes	yes	yes
Test voltage	500 V AC	500 V AC	500 V AC
Times	**773712**	**773727**	**773733**
Supply interruption before de-energisation	20 ms	20 ms	20 ms
Environmental data	**773712**	**773727**	**773733**
Ambient temperature			
In accordance with the standard	EN 60068-2-14	EN 60068-2-14	EN 60068-2-14
Temperature range	0 - 60 °C	0 - 50 °C	0 - 60 °C
Storage temperature			
In accordance with the standard	EN 60068-2-1/-2	EN 60068-2-1/-2	EN 60068-2-1/-2
Temperature range	-25 - 70 °C	-25 - 70 °C	-25 - 70 °C

Fieldbus modules
PNOZ mc6p/mc6.1p

Environmental data	773712	773727	773733
Climatic suitability			
In accordance with the standard	**EN 60068-2-30, EN 60068-2-78**	**EN 60068-2-30, EN 60068-2-78**	**EN 60068-2-30, EN 60068-2-78**
Humidity	**93 % r. h. at 40 °C**	**93 % r. h. at 40 °C**	**93 % r. h. at 40 °C**
Condensation during operation	**Not permitted**	**Short-term**	**Not permitted**
EMC	**EN 61131-2**	**EN 61131-2**	**EN 61131-2**
Vibration			
In accordance with the standard	**EN 60068-2-6**	**EN 60068-2-6**	**EN 60068-2-6**
Frequency	**10 - 150 Hz**	**10 - 150 Hz**	**10 - 150 Hz**
Acceleration	**1g**	**1g**	**1g**
Corrosive gas check			
SO2: Concentration 10 ppm, duration 10 days, passive	–	**DIN V 40046-36**	–
H2S: Concentration 1 ppm, duration 10 days, passive	–	**DIN V 40046-37**	–
Shock stress			
In accordance with the standard	**EN 60068-2-27**	**EN 60068-2-27**	**EN 60068-2-27**
Acceleration	**15g**	**15g**	**15g**
Duration	**11 ms**	**11 ms**	**11 ms**
Max. operating height above sea level	**2000 m**	**2000 m**	**2000 m**
Airgap creepage			
In accordance with the standard	**EN 61131-2**	**EN 61131-2**	**EN 61131-2**
Overvoltage category	**III**	**III**	**III**
Pollution degree	**2**	**2**	**2**
Rated insulation voltage	**30 V**	**30 V**	**30 V**
Protection type			
In accordance with the standard	**EN 60529**	**EN 60529**	**EN 60529**
Mounting area (e.g. control cabinet)	**IP54**	**IP54**	**IP54**
Housing	**IP20**	**IP20**	**IP20**
Terminals	**IP20**	**IP20**	**IP20**
Mechanical data	**773712**	**773727**	**773733**
Mounting position	**horizontally on mounting rail**	**horizontally on mounting rail**	**horizontally on mounting rail**

Fieldbus modules
PNOZ mc6p/mc6.1p

Mechanical data	773712	773727	773733
DIN rail			
Top hat rail	**35 x 7,5 EN 50022**	**35 x 7,5 EN 50022**	**35 x 7,5 EN 50022**
Recess width	**27 mm**	**27 mm**	**27 mm**
Material			
Bottom	**PPO UL 94 V0**	**PPO UL 94 V0**	**PPO UL 94 V0**
Front	**ABS UL 94 V0**	**ABS UL 94 V0**	**ABS UL 94 V0**
Dimensions			
Height	**94 mm**	**94 mm**	**94 mm**
Width	**22,5 mm**	**22,5 mm**	**22,5 mm**
Depth	**119 mm**	**119 mm**	**119 mm**
Weight	**115 g**	**145 g**	**110 g**

Where standards are undated, the 2020-07 latest editions shall apply.

Order reference

Product

Product type	Features	Order No.
PNOZ mc6p	Fieldbus module, CANopen, protocol: CiA DS-301 V3.0	773 712
PNOZ mc6p coated version	Fieldbus module, CANopen, coated version, protocol: CiA DS-301 V3.0	773 727
PNOZ mc6.1p	Fieldbus module, CANopen, protocol: CiA DS-301 4.0.2	773 733

Accessories

Jumper

Product type	Features	Order No.
KOP-XE	Jumper	774 639
KOP-XE coated	Jumper, coated version	774 640

Fieldbus modules
PNOZ mc7p

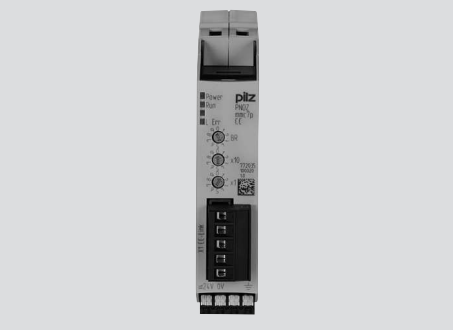

Overview

Unit features

Application of the product PNOZ mc7p:

Expansion module for connection to a base unit from the configurable control system PNOZmulti

The product has the following features:

- Can be configured in the PNOZmulti Configurator
- Connection for CC-Link
- Station addresses from 0 ... 63, selected via rotary switch
- Station type: Remote Device
- Occupied stations: 2
- 24 virtual inputs and outputs on the control system PNOZmulti can be defined in the PNOZmulti Configurator for communication with the fieldbus CC-Link . The number of inputs and outputs can be extended to 128. Please note that when the extended inputs and outputs 24 - 127 are used they have different properties (see document entitled "Communication Interfaces").
- Max. 1 PNOZ mc7p can be connected to the base unit
- Please refer to the document "PNOZmulti System Expansion" for the PNOZmulti base units that can be connected.

Fieldbus modules
PNOZ mc7p

Front view

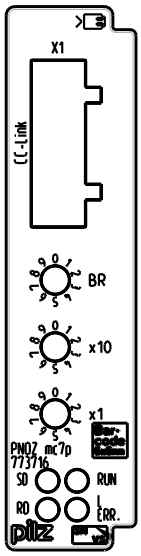

Legend:

- LED:
  - Run
  - SD
  - RD
  - L Err

Function description

Functions

The virtual inputs and outputs that are to be transferred via the fieldbus CC-Link are selected and configured in the PNOZmulti Configurator. The base unit and the fieldbus module PNOZ mc7p are connected via a jumper. The fieldbus module is also supplied with voltage via this jumper. After the supply voltage is switched on or the control system PNOZmulti is reset, the fieldbus module PNOZ mc7p is configured and started automatically.

LEDs indicate the status of the fieldbus module on the fieldbus CC-Link .

The configuration is described in detail in the PNOZmulti Configurator's online help.

Fieldbus modules
PNOZ mc7p

Input and output data

The data is structured as follows:

- Input area
  - Inputs on PNOZmulti Configurator: i00 … i23
  - Input data CC-Link: RY0n, RY1n with n = 0 … F

    Example: i23 -> RY17

n	F	E	D	C	B	A	9	8	7	6	5	4	3	2	1	0
RY0n	i15	i14	i13	i12	i11	i10	i09	i08	i07	i06	i05	i04	i03	i02	i01	i00
RY1n	-	-	-	-	-	-	-	-	i23	i22	i21	i20	i19	i18	i17	i16

- Output range
  - Outputs on PNOZmulti Configurator: o00 … o23
  - Output data CC-Link: RXn, RX1n with n = 0 … F

    Example: o22 -> Rx16

n	F	E	D	C	B	A	9	8	7	6	5	4	3	2	1	0
RX 0n	o15	o14	o13	o12	o11	o10	o09	o08	o07	o06	o05	o04	o03	o02	o01	o00
RX 1n	-	-	-	-	-	-	-	-	o23	o22	o21	o20	o19	o18	o17	o16

The number of virtual inputs and outputs can be extended to 128 (see document "Communication Interfaces" in the section entitled "Fieldbus modules")

Detailed information on data exchange is available in the document "Communication Interfaces PNOZmulti 2" in the section entitled "Fieldbus modules".

Block diagram

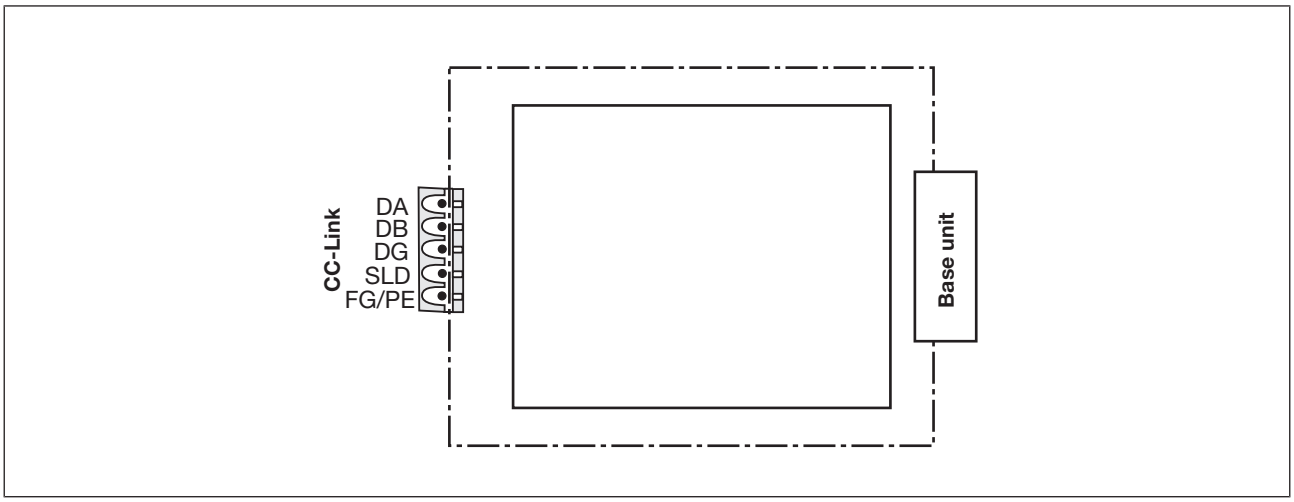

Fieldbus modules
PNOZ mc7p

Installation

Dimensions in mm

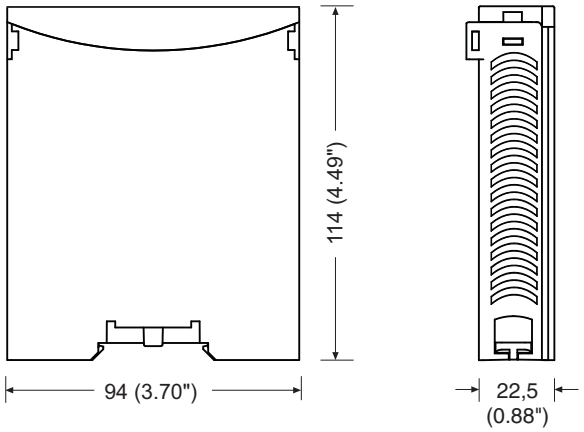

Commissioning

General wiring guidelines

The wiring is defined in the circuit diagram of the PNOZmulti Configurator.

Please note:

- Information given in the Technical details [📖 469] must be followed.
- The position of the expansion module is specified in the Hardware configuration of the PNOZmulti Configurator.
- Use copper wiring with a temperature stability of 75 °C.
- Always connect the mounting rail to the protective earth via an earthing terminal. This will be used to dissipate hazardous voltages in the case of a fault.
- The power supply must meet the regulations for extra low voltages with protective electrical separation (SELV, PELV).

Fieldbus modules
PNOZ mc7p

Interface assignment

It is possible to define which outputs on the safety system will communicate with CC-Link. The connection to CC-Link is made via a 5-pin screw connector.

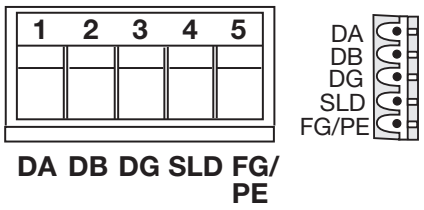

1: DA (Channel A)

2: DB (Channel B)

3: DG (Earth)

4: SLD (Cable shield)

5: FG/PE (Functional earth)

Download modified project to the PNOZmulti safety system

As soon as an additional expansion module has been connected to the system, the project must be amended in the PNOZmulti Configurator and downloaded back into the base unit. Proceed as described in the operating manual for the base unit.

Fieldbus modules
PNOZ mc7p

Connection example

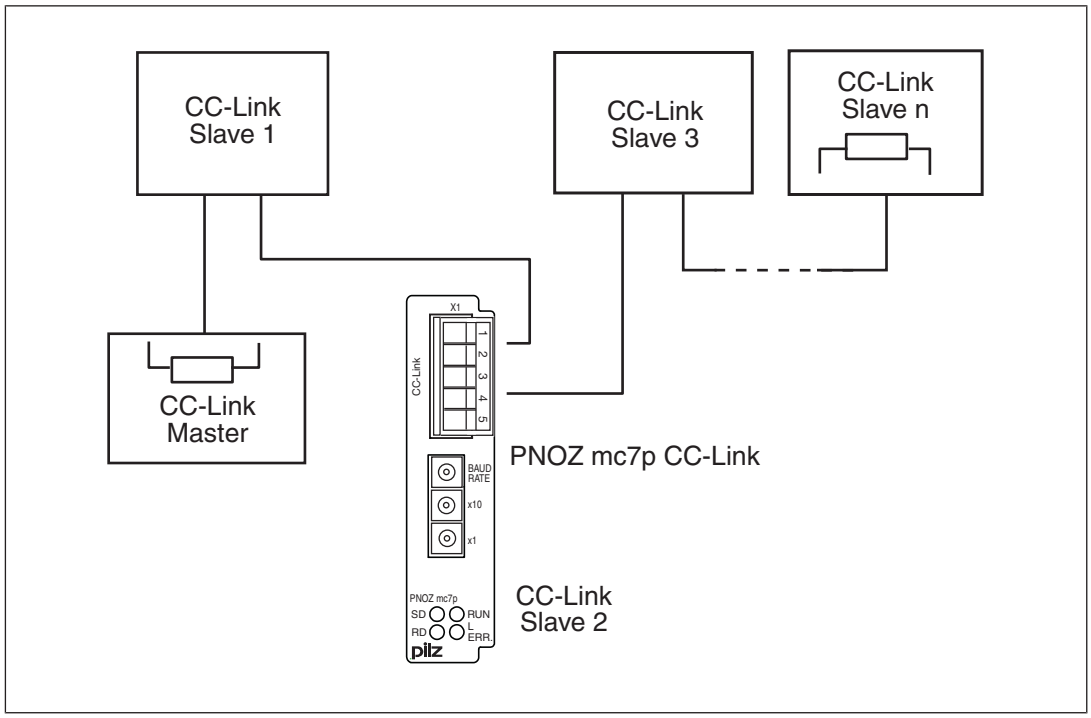

Technical Details

General	
Certifications	**CCC, CE, EAC (Eurasian), cULus Listed**
Electrical data	
Supply voltage	
for	**Module supply**
Voltage	**5 V**
Kind	**DC**
Voltage tolerance	**-2 %/+2 %**
Power consumption	**2,5 W**
Status indicator	**LED**
Fieldbus interface	
Fieldbus interface	**CC-Link V1.10**
Device type	**Slave**
Station address	**0 ... 63d**
Transmission rates	**10 MBit/s, 156 kbit/s, 2,5 MBit/s, 5 MBit/s, 625 kbit/s**
Connection	**5-pin Combicon plug-in connector**
Assigned stations	**2**
Galvanic isolation	**yes**

Fieldbus modules
PNOZ mc7p

Fieldbus interface	
Test voltage	**500 V AC**
Times	
Supply interruption before de-energisation	**20 ms**
Environmental data	
Ambient temperature	
In accordance with the standard	**EN 60068-2-14**
Temperature range	**0 - 60 °C**
Storage temperature	
In accordance with the standard	**EN 60068-2-1/-2**
Temperature range	**-25 - 70 °C**
Climatic suitability	
In accordance with the standard	**EN 60068-2-30, EN 60068-2-78**
Humidity	**93 % r. h. at 40 °C**
Condensation during operation	**Not permitted**
EMC	**EN 61131-2**
Vibration	
In accordance with the standard	**EN 60068-2-6**
Frequency	**10 - 150 Hz**
Acceleration	**1g**
Shock stress	
In accordance with the standard	**EN 60068-2-27**
Acceleration	**15g**
Duration	**11 ms**
Max. operating height above sea level	**2000 m**
Airgap creepage	
In accordance with the standard	**EN 61131-2**
Overvoltage category	**III**
Pollution degree	**2**
Rated insulation voltage	**30 V**
Protection type	
In accordance with the standard	**EN 60529**
Mounting area (e.g. control cabinet)	**IP54**
Housing	**IP20**
Terminals	**IP20**
Potential isolation	
Potential isolation between	**Fieldbus and module voltage**
Type of potential isolation	**Functional insulation**
Rated surge voltage	**500 V**
Mechanical data	
Mounting position	**horizontally on mounting rail**

Fieldbus modules
PNOZ mc7p

Mechanical data	
DIN rail	
Top hat rail	**35 x 7,5 EN 50022**
Recess width	**27 mm**
Material	
Bottom	**PPO UL 94 V0**
Front	**ABS UL 94 V0**
Dimensions	
Height	**94 mm**
Width	**22,5 mm**
Depth	**122 mm**
Weight	**110 g**

Where standards are undated, the 2020-07 latest editions shall apply.

Order reference

Product

Product type	Features	Order no.
PNOZ mc7p	Fieldbus module, CC-Link	773 716

Accessories

Jumper

Product type	Features	Order No.
KOP-XE	Jumper	774 639

Fieldbus modules
PNOZ mc8p



Overview

Unit features

Application of the product PNOZ mc8p:

Expansion module for connection to a base unit from the PNOZmulti system.

The product has the following features:

- Can be configured in the PNOZmulti Configurator
- Connection for Ethernet/IP and Modbus TCP
- Transmission rate 10 MBit/s (10BaseT) and 100 MBit/s (100BaseTX), full and half duplex
- IP address is set via DIP switches on the front of the unit
- Status indicators for communication and for errors
- 24 virtual inputs and outputs on the control system PNOZmulti can be defined in the PNOZmulti Configurator for communication with the fieldbus EtherNet/IP, Modbus TCP . The number of inputs and outputs can be extended to 128. Please note that when the extended inputs and outputs 24 - 127 are used they have different properties (see document entitled "Communication Interfaces").
- Max. 1 PNOZ mc8p can be connected to the base unit
- Please refer to the document "PNOZmulti System Expansion" for details of the base units PNOZmulti that can be connected.

Fieldbus modules
PNOZ mc8p

Front view

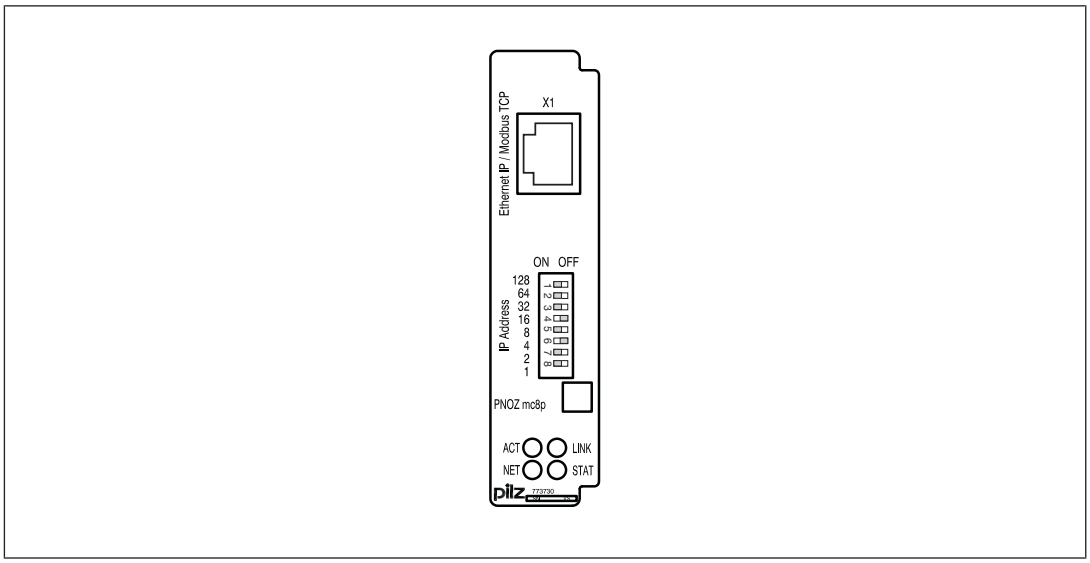

Legend

X1:	EtherNet/IP, Modbus TCP interface
IP address:	for setting the IP address
LEDs:	ACT, LINK, STAT, NET

EtherNet/IP™ is registered trademark and patented technology, licensed by ODVA.

Function description

Functions

The virtual inputs and outputs that are to be transferred via the fieldbus EtherNet/IP, Modbus TCP are selected and configured in the PNOZmulti Configurator. The base unit and the fieldbus module PNOZ mc8p are connected via a jumper. The fieldbus module is also supplied with voltage via this jumper. After the supply voltage is switched on or the control system PNOZmulti is reset, the fieldbus module PNOZ mc8p is configured and started automatically.

LEDs indicate the status of the fieldbus module on the fieldbus EtherNet/IP, Modbus TCP .

The configuration is described in detail in the PNOZmulti Configurator's online help.

Fieldbus modules
PNOZ mc8p

Data exchange

Twenty bytes always must be sent and received for communication with the PNOZmulti.

Ethernet/IP

The input/output data from the PNOZmulti can be polled using the assembly object (Class 04h).

- Data from the PNOZmulti are requested with instance 64h.
- Instance 96h writes the data from the Ethernet IP scanner to the PNOZmulti.

Modbus TCP

No connection needs to be configured for the PNOZ mc8p. Port 502 is used in accordance with the Modbus TCP specification.

The Modbus TCP supports the following function codes:

3,16 and 23 (refer to the document "PNOZmulti Communication Interfaces" for details of additional function codes)

The address input range begins with Register 0. The address output range begins with Register 1024. The Byte sequence for a Word is High Byte/Low Byte

Word	
Left Byte	**Right Byte**
Low Byte (Bit 7 ... 00)	High Byte (Bit 15 ... 08)

Input and output data

The data is structured as follows:

Input area

The inputs are defined in the master and transferred to the PNOZmulti. Each input has a number, e.g. input bit 4 of byte 1 has the number I12.

Virtual inputs PNOZmulti Configurator	I0 … I7	I8 … I15	I16 … I23	...	I120…I127
EtherNet/IP, Modbus TCP	Byte 0: Bit 0 … 7	Byte 1: Bit 0 … 7	Byte 2: Bit 0 … 7	...	Byte 15: Bit 0 … 7

Fieldbus modules
PNOZ mc8p

Output range

The outputs are defined in the PNOZmulti Configurator. Each output that is used is given a number there, e.g. O0, O5... .
The status of output O0 is stored in bit 0 of byte 0; the status of output O5 is stored in bit 5 of byte 0 etc.

Virtual inputs PNOZmulti Configurator	O0 … O7	O8 … O15	O16 … O23	...	O120… O127
EtherNet/IP, Modbus TCP	Byte 0: Bit 0 … 7	Byte 1: Bit 0 … 7	Byte 2: Bit 0 … 7	...	Byte 15: Bit 0 … 7

- Bits 0 … 4: Status of LEDs on the PNOZmulti
  Bit 0: OFAULT
  Bit 1: IFAULT
  Bit 2: FAULT
  Bit 3: DIAG
  Bit 4: RUN
- Data exchange is displayed in Bit 5.
- Polling the payload data: 2 Bytes with the table number and segment number are sent by the Master for access to the payload data table (15 Bytes are returned to the Master).

Detailed information on data exchange is available in the document "Communication Interfaces", under "Fieldbus modules".

The number of virtual inputs and outputs can be extended to 128 (see document "Communication Interfaces", under "Fieldbus modules").

Block diagram

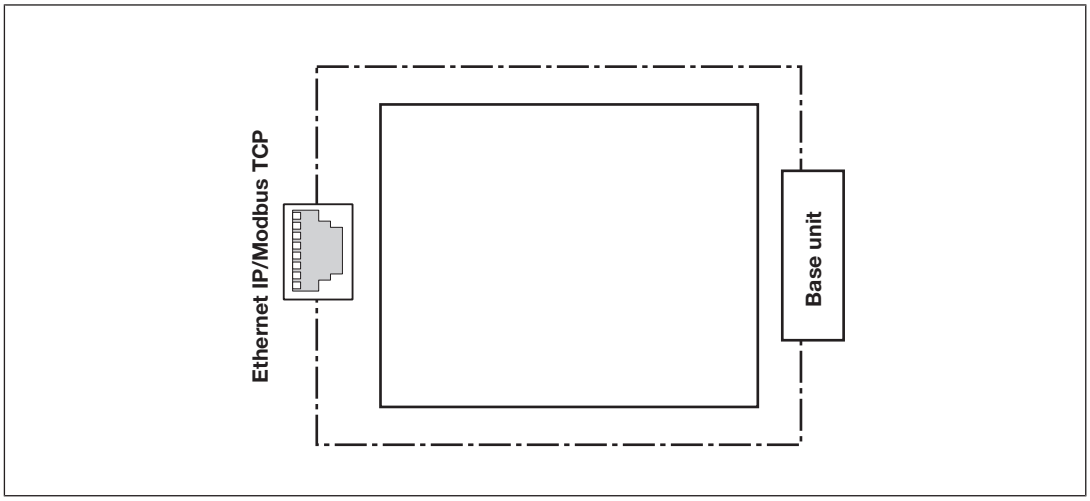

Fieldbus modules
PNOZ mc8p

Installation

Dimensions in mm

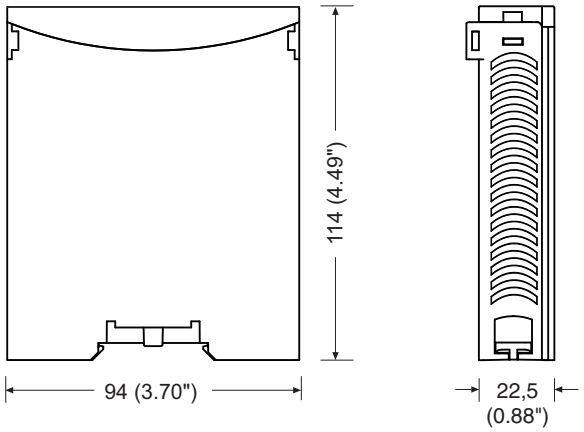

Commissioning

General wiring guidelines

The wiring is defined in the circuit diagram of the PNOZmulti Configurator. It is possible to define which inputs and outputs on the safety system will communicate with EtherNet/IP, Modbus TCP.

Please note:

- Information given in the "Technical details [📖 479]" must be followed.
- Use copper wiring with a temperature stability of 75 °C.

Please note the following when connecting to EtherNet/IP, Modbus TCP:

- The following minimum requirements of the connection cable and connector must be met:
  - Only use standard industrial Ethernet cable and connectors.
  - Only use double-shielded twisted pair cable and shielded RJ45 connectors (industrial connectors).
  - 100BaseTX cable in accordance with the Ethernet standard (min. Category 5)
- Measures to protect against interference:

  Ensure the requirements for the industrial use of EtherNet/IP, Modbus TCP are met, as stated in the Installation Manual published by the User Group.
- Always connect the mounting rail to the protective earth via an earthing terminal. This will be used to dissipate hazardous voltages in the case of a fault.

Fieldbus modules
PNOZ mc8p

- The power supply must meet the regulations for extra low voltages with protective electrical separation (SELV, PELV).

Connecting the supply voltage

Connect the supply voltage to the base unit:

- Terminal **24 V** and **A1 (+)**: + 24 VDC
- Terminal **0 V** and **A2 (-)**: 0 V

Interface assignment

RJ45 socket 8-pin	PIN	Standard
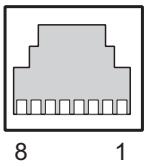	1	TD+ (Transmit+)
	2	TD- (Transmit-)
	3	RD+ (Receive+)
	4	n.c.
	5	n.c.
	6	RD- (Receive-)
	7	n.c.
	8	n.c.

n.c.: Not connected

Set IP address

The IP address of the fieldbus module PNOZ mc8p is set using the DIP switch on the front.

- The first three bytes of the IP address are: 192.168.0.
- Subnet mask: 255.255.255.0.
- The last byte of the IP address is configured (value range: 1 ...255).

Example: DIP switch: 00010100 (20 decimal)

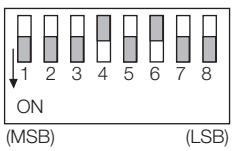

IP address: 192.168.0.20

Fieldbus modules
PNOZ mc8p

Change IP settings

Once the IP addresses of the computer and PNOZ mc8p have been configured, you can change the IP settings of the PNOZ mc8p.

- Connect the PNOZ mc8p to the computer.
- Call up the following html page: http://192.168.0.20/config.htm
- Configure the settings for the PNOZ mc8p.
  Example:
  IP address: 172.16.216.139
  Subnet mask: 255.255.0.0
  Gateway address: --
  DNS1 address: --
  DNS1 address: --
  Host name: ---
  Domain name: --
  SMTP server: --
  DHCP enabled: No
- Click on ***Store Configuration***. The settings are transferred to the expansion module.
- Switch off the supply voltage.
- Set all DIP switches to zero.
- Switch on the supply voltage. The new IP address for the unit is now set.

Connection example

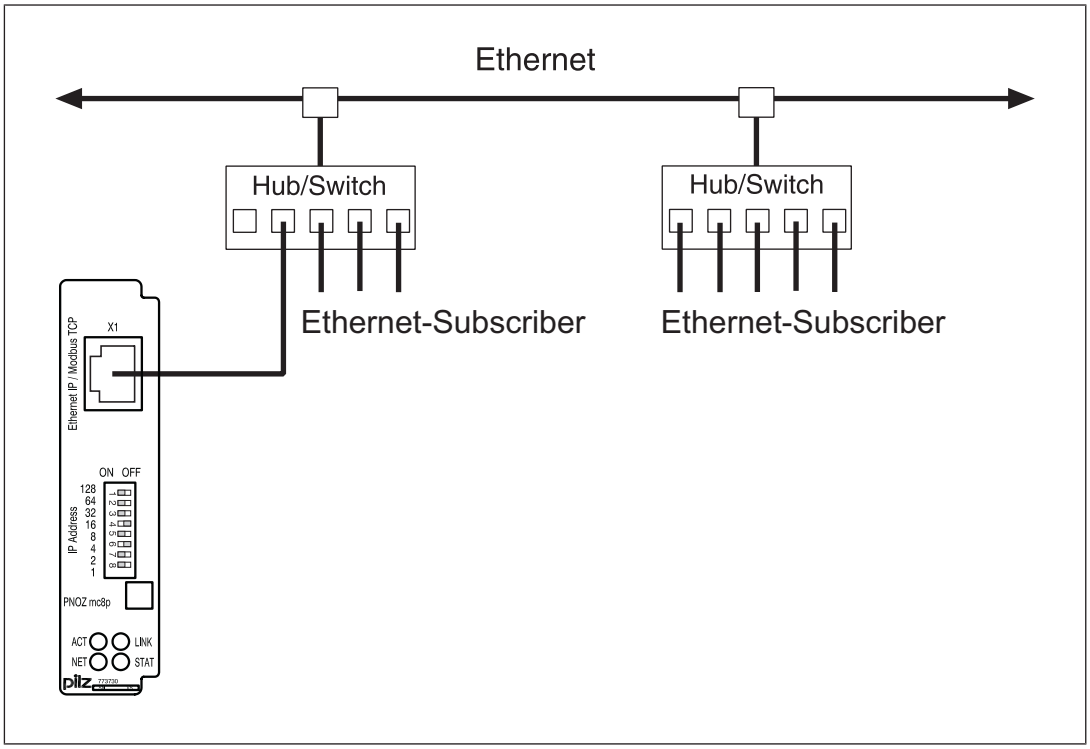

Fieldbus modules
PNOZ mc8p

Technical Details

General	773730	773734
Certifications	CCC, CE, EAC (Eurasian), KCC, KOSHA, TÜV, cULus Listed	CCC, CE, EAC (Eurasian), KOSHA, TÜV, cULus Listed
Electrical data	**773730**	**773734**
Supply voltage		
for	Module supply	Module supply
internal	Via base unit	Via base unit
Voltage	5 V	5 V
Kind	DC	DC
Voltage tolerance	-2 %/+2 %	-2 %/+2 %
Power consumption	2,5 W	2,5 W
Status indicator	LED	LED
Fieldbus interface	**773730**	**773734**
Fieldbus interface	EtherNet/IP (TM), Modbus/TCP	EtherNet/IP (TM), Modbus/TCP
Device type	Slave	Slave
Transmission rates	10 MBit/s, 100 MBit/s	10 MBit/s, 100 MBit/s
Connection	RJ45	RJ45
Galvanic isolation	yes	yes
Test voltage	500 V AC	500 V AC
Times	**773730**	**773734**
Supply interruption before de-energisation	20 ms	20 ms
Environmental data	**773730**	**773734**
Ambient temperature		
In accordance with the standard	EN 60068-2-14	EN 60068-2-14
Temperature range	0 - 60 °C	-25 - 60 °C
Forced convection in control cabinet off	50 °C	50 °C
Storage temperature		
In accordance with the standard	EN 60068-2-1/-2	EN 60068-2-1/-2
Temperature range	-25 - 70 °C	-25 - 70 °C
Climatic suitability		
In accordance with the standard	EN 60068-2-30, EN 60068-2-78	EN 60068-2-30, EN 60068-2-78
Humidity	93 % r. h. at 40 °C	93 % r. h. at 40 °C
Condensation during operation	Not permitted	Short-term
EMC	EN 61131-2	EN 61131-2

Fieldbus modules
PNOZ mc8p

Environmental data	773730	773734
Vibration		
In accordance with the standard	**EN 60068-2-6**	**EN 60068-2-6**
Frequency	**5 - 500 Hz**	**5 - 500 Hz**
Acceleration	**1g**	**1g**
Broadband noise		
In accordance with the standard	–	**EN 60068-2-64**
Frequency	–	**5 - 500 Hz**
Acceleration	–	**1,9grms**
Shock stress		
In accordance with the standard	**EN 60068-2-27**	**EN 60068-2-27**
Acceleration	**15g**	**15g**
Duration	**11 ms**	**11 ms**
Max. operating height above sea level	**2000 m**	**2000 m**
Airgap creepage		
In accordance with the standard	**EN 61131-2**	**EN 61131-2**
Overvoltage category	**III**	**III**
Pollution degree	**2**	**2**
Rated insulation voltage	**30 V**	**30 V**
Protection type		
In accordance with the standard	**EN 60529**	**EN 60529**
Mounting area (e.g. control cabinet)	**IP54**	**IP54**
Housing	**IP20**	**IP20**
Terminals	**IP20**	**IP20**
Mechanical data	**773730**	**773734**
Mounting position	**horizontally on mounting rail**	**horizontally on mounting rail**
DIN rail		
Top hat rail	**35 x 7,5 EN 50022**	**35 x 7,5 EN 50022**
Recess width	**27 mm**	**27 mm**
Material		
Bottom	**PPO UL 94 V0**	**PPO UL 94 V0**
Front	**ABS UL 94 V0**	**ABS UL 94 V0**
Dimensions		
Height	**94 mm**	**94 mm**
Width	**22,5 mm**	**22,5 mm**
Depth	**114 mm**	**114 mm**
Weight	**137 g**	**140 g**

Where standards are undated, the 2020-07 latest editions shall apply.

Fieldbus modules
PNOZ mc8p

Order reference

Product

Product type	Features	Order No.
PNOZ mc8p	Fieldbus module, Ethernet/IP, Modbus TCP	773 730
PNOZ mc8p coated version	Fieldbus module, Ethernet/IP, Modbus TCP	773 734

Accessories

Jumper

Product type	Features	Order No.
KOP-XE	Jumper	774 639
KOP-XE coated	Jumper, coated version	774 640

Fieldbus modules
PNOZ mc9p



Overview

Unit features

Application of the product PNOZ mc9p:

Expansion module for connection to a base unit from the PNOZmulti system.

The product has the following features:

- Can be configured in the PNOZmulti Configurator
- Connection for PROFINET IO
- Transmission rate 100 MBit/s (100BaseTX), full and half duplex
- Status indicators for communication and for errors
- 24 virtual inputs and outputs on the control system PNOZmulti can be defined in the PNOZmulti Configurator for communication with the fieldbus PROFINET . The number of inputs and outputs can be extended to 128. Please note that when the extended inputs and outputs 24 - 127 are used they have different properties (see document entitled "Communication Interfaces").
- Max. 1 PNOZ mc9p can be connected to the base unit
- Please refer to the document "PNOZmulti System Expansion" for details of the base units PNOZmulti that can be connected.

Fieldbus modules
PNOZ mc9p

Front view

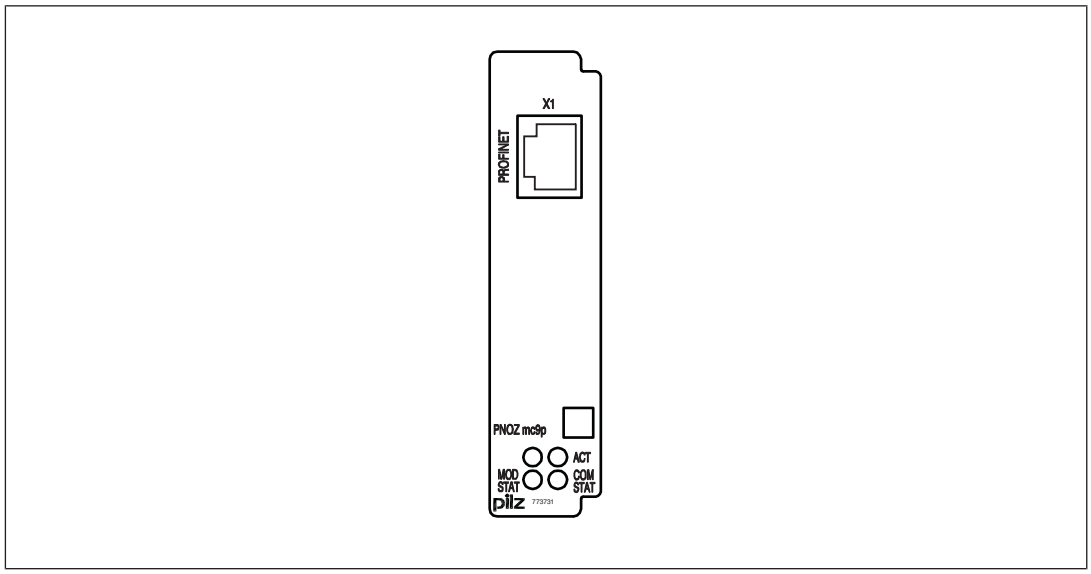

Legend:

- X1: Profinet interface
- LED:
  - ACT
  - COM STAT
  - MOD STAT

Function description

Functions

The virtual inputs and outputs that are to be transferred via the fieldbus PROFINET are selected and configured in the PNOZmulti Configurator. The base unit and the fieldbus module PNOZ mc9p are connected via a jumper. The fieldbus module is also supplied with voltage via this jumper. After the supply voltage is switched on or the control system PNOZmulti is reset, the fieldbus module PNOZ mc9p is configured and started automatically.

LEDs indicate the status of the fieldbus module on the fieldbus PROFINET .

The configuration is described in detail in the PNOZmulti Configurator's online help.

Fieldbus modules
PNOZ mc9p

Input and output data

32 bytes must always be sent and received for communication with the PNOZmulti. Only the first 20 bytes are used (see document "PNOZmulti Communication Interfaces").

The data is structured as follows:

Input area

The inputs are defined in the master and transferred to the PNOZmulti. Each input has a number, e.g. input bit 4 of byte 1 has the number I12.

Virtual inputs PNOZmulti Configurator	I0 … I7	I8 … I15	I16 … I23	...	I120…I127
PROFINET	Byte 0: Bit 0 … 7	Byte 1: Bit 0 … 7	Byte 2: Bit 0 … 7	...	Byte 15: Bit 0 … 7

Output range

The outputs are defined in the PNOZmulti Configurator. Each output that is used is given a number there, e.g. O0, O5... .
The status of output O0 is stored in bit 0 of byte 0; the status of output O5 is stored in bit 5 of byte 0 etc.

Virtual inputs PNOZmulti Configurator	O0 … O7	O8 … O15	O16 … O23	...	O120… O127
PROFINET	Byte 0: Bit 0 … 7	Byte 1: Bit 0 … 7	Byte 2: Bit 0 … 7	...	Byte 15: Bit 0 … 7

- Bits 0 … 4: Status of LEDs on the PNOZmulti
  Bit 0: OFAULT
  Bit 1: IFAULT
  Bit 2: FAULT
  Bit 3: DIAG
  Bit 4: RUN
- Data exchange is displayed in Bit 5.
- Polling the payload data: 2 Bytes with the table number and segment number are sent by the Master for access to the payload data table (15 Bytes are returned to the Master).

Detailed information on data exchange is available in the document "Communication Interfaces", under "Fieldbus modules".

The number of virtual inputs and outputs can be extended to 128 (see document "PNOZmulti Communication Interfaces", under "Fieldbus modules")

Fieldbus modules
PNOZ mc9p

Block diagram

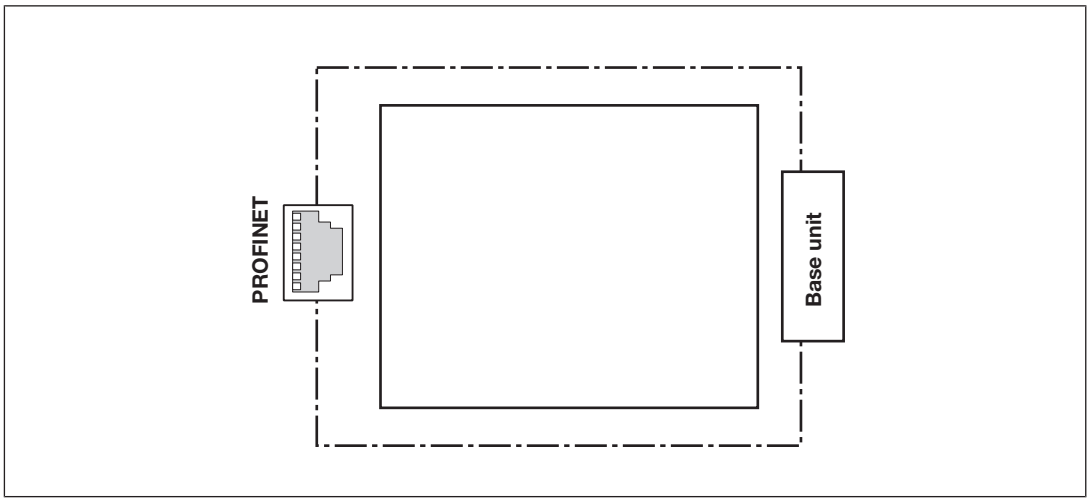

Installation

Dimensions in mm

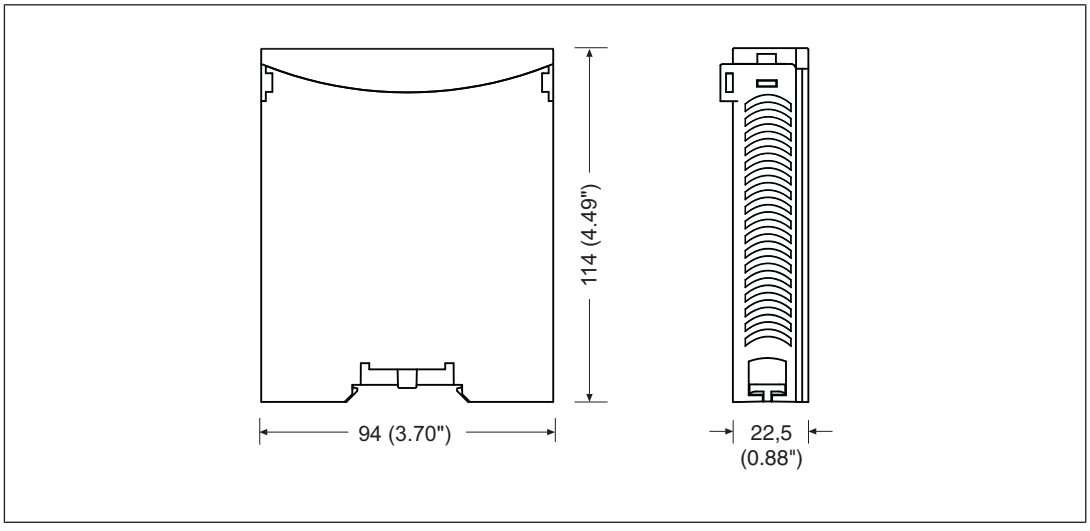

Commissioning

General wiring guidelines

The wiring is defined in the circuit diagram of the PNOZmulti Configurator. It is possible to define which inputs and outputs on the safety system will communicate with PROFINET.

Please note:

- Information given in the "Technical details [📖 488]" must be followed.
- Use copper wiring with a temperature stability of 75 °C.

Fieldbus modules
PNOZ mc9p

Please note the following when connecting to PROFINET:

- The following minimum requirements of the connection cable and connector must be met:
  - Only use standard industrial Ethernet cable and connectors.
  - Only use double-shielded twisted pair cable and shielded RJ45 connectors (industrial connectors).
  - 100BaseTX cable in accordance with the Ethernet standard (min. Category 5)
- Measures to protect against interference:

  Ensure the requirements for the industrial use of PROFINET are met, as stated in the Installation Manual published by the User Group.
- Always connect the mounting rail to the protective earth via an earthing terminal. This will be used to dissipate hazardous voltages in the case of a fault.
- The power supply must meet the regulations for extra low voltages with protective electrical separation (SELV, PELV).

Interface assignment

RJ45 socket 8-pin	PIN	Standard
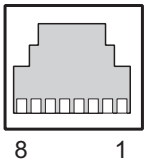	1	TD+ (Transmit+)
	2	TD- (Transmit-)
	3	RD+ (Receive+)
	4	n.c.
	5	n.c.
	6	RD- (Receive-)
	7	n.c.
	8	n.c.

n.c.: Not connected

Preparing for operation

Assign unit name

The unit name is assigned in the PNOZmulti Configurator. When selecting the PNOZ mc9p, enter the unit name under ***Equipment Identifier***.

- You can also assign the unit name through the IO Controller. In this case, insert a "$" symbol in front of the unit name in the PNOZmulti Configurator, under ***Equipment Identifier***.

- The unit name on the Ethernet subnet must be unique. It must comply with the DNS conventions:
  - Max. 127 characters (letters, numbers, hyphen or period)
  - Max. 63 characters between two periods
- The following characters are invalid: ä ö ü ( ) _ / space
- The unit name may not
  - Begin or end with the "-" character.
  - Have the form n.n.n.n (n = 0 ... 999).
  - Start with the sequence "port-xyz-" (x, y, z = 0 ... 9).

Install GSD file

Install the GSD file. The GSD file is available on the Internet at www.pilz.de.

Set IP address

There are two options:

- Automatic assignment of the IP address with the Dynamic Host Configuration Protocol (DHCP)
- Assignment of the IP address by the IO controller before system startup based on the unique unit name.

Connecting the supply voltage

Connect the supply voltage to the base unit:

- Terminal **24 V** and **A1 (+)**: + 24 VDC
- Terminal **0 V** and **A2 (-)**: 0 V

Fieldbus modules
PNOZ mc9p

Connection example

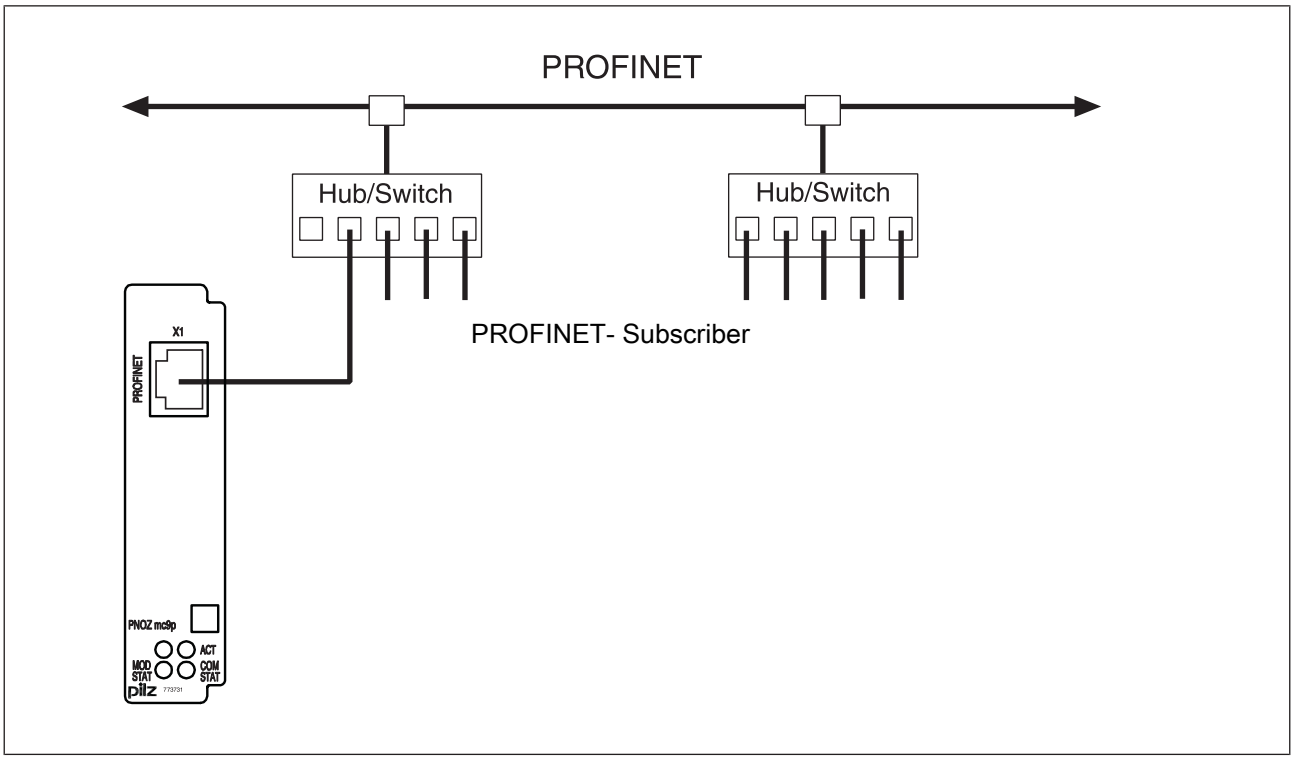

Technical details

General	
Certifications	**CCC, CE, EAC (Eurasian), KCC, KOSHA, TÜV, cU-Lus Listed**
Electrical data	
Supply voltage	
for	**Module supply**
internal	**Via base unit**
Voltage	**5 V**
Kind	**DC**
Voltage tolerance	**-2 %/+2 %**
Power consumption	**2,5 W**
Status indicator	**LED**
Fieldbus interface	
Fieldbus interface	**PROFINET IO**
Device type	**Slave**
Transmission rates	**100 MBit/s**
Connection	**RJ45**
Galvanic isolation	**yes**

Fieldbus modules
PNOZ mc9p

Fieldbus interface	
Test voltage	**500 V AC**
Times	
Supply interruption before de-energisation	**20 ms**
Environmental data	
Ambient temperature	
In accordance with the standard	**EN 60068-2-14**
Temperature range	**0 - 60 °C**
Forced convection in control cabinet off	**50 °C**
Storage temperature	
In accordance with the standard	**EN 60068-2-1/-2**
Temperature range	**-25 - 70 °C**
Climatic suitability	
In accordance with the standard	**EN 60068-2-30, EN 60068-2-78**
Humidity	**93 % r. h. at 40 °C**
Condensation during operation	**Not permitted**
EMC	**EN 61131-2**
Vibration	
In accordance with the standard	**EN 60068-2-6**
Frequency	**10 - 150 Hz**
Acceleration	**1g**
Shock stress	
In accordance with the standard	**EN 60068-2-27**
Acceleration	**15g**
Duration	**11 ms**
Max. operating height above sea level	**2000 m**
Airgap creepage	
In accordance with the standard	**EN 61131-2**
Overvoltage category	**III**
Pollution degree	**2**
Rated insulation voltage	**30 V**
Protection type	
In accordance with the standard	**EN 60529**
Mounting area (e.g. control cabinet)	**IP54**
Housing	**IP20**
Terminals	**IP20**
Mechanical data	
Mounting position	**horizontally on mounting rail**
DIN rail	
Top hat rail	**35 x 7,5 EN 50022**
Recess width	**27 mm**

Fieldbus modules
PNOZ mc9p

Mechanical data	
Material	
Bottom	**PPO UL 94 V0**
Front	**ABS UL 94 V0**
Dimensions	
Height	**94 mm**
Width	**22,5 mm**
Depth	**114 mm**
Weight	**135 g**

Where standards are undated, the 2020-07 latest editions shall apply.

Order reference

Product

Product type	Features	Order No.
PNOZ mc9p	Fieldbus module, PROFINET IO	773 731

Accessories

Jumper

Product type	Features	Order No.
KOP-XE	Jumper	774 639

Fieldbus modules
PNOZ mc10p



Overview

Unit features

Application of the product PNOZ mc10p:

Expansion module for connection to a base unit from the configurable control system PNOZmulti

The product has the following features:

- Can be configured in the PNOZmulti Configurator
- Connection for sercos III
- Status indicators for communication with sercos III and for errors
- Delivery configuration with IP address: 192.168.1.64 and Sercos address: 64
- 24 virtual inputs and outputs on the control system PNOZmulti can be defined in the PNOZmulti Configurator for communication with the fieldbus sercos III . The number of inputs and outputs can be extended to 128. Please note that when the extended inputs and outputs 24 - 127 are used they have different properties (see document entitled "Communication Interfaces").
- Max. 1 PNOZ mc10p can be connected to the base unit
- Please refer to the document "PNOZmulti System Expansion" for the PNOZmulti base units that can be connected.

Fieldbus modules
PNOZ mc10p

Front view

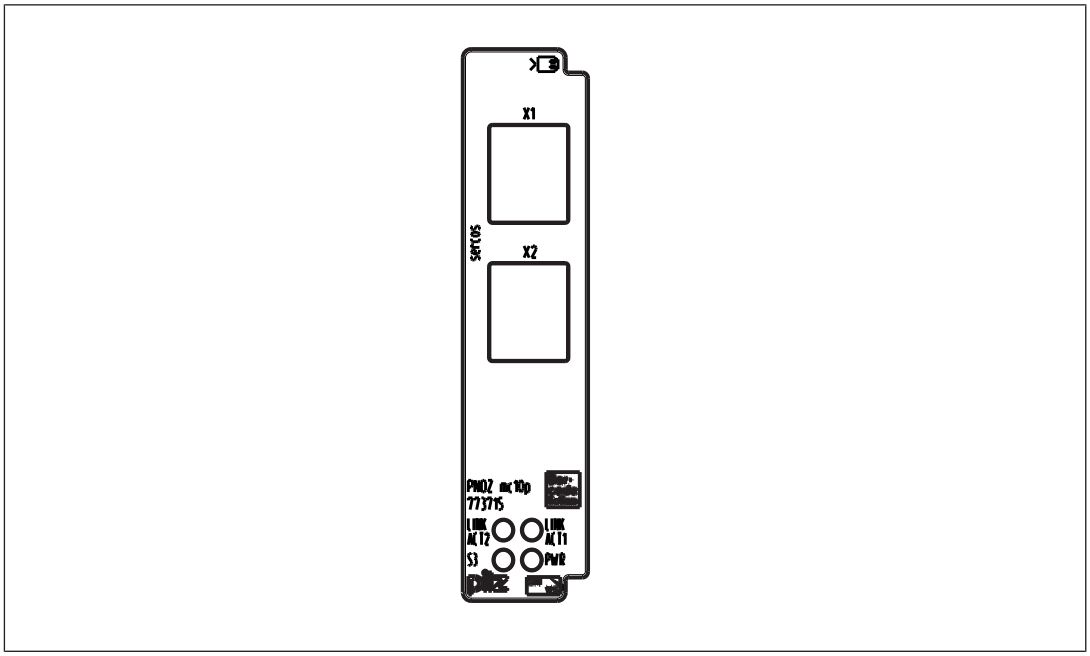

Legend

- X1, X2: sercos III interfaces
- LED:
  - LINK ACT1
  - LINK ACT2
  - PWR
  - S3

Function description

Functions

The virtual inputs and outputs that are to be transferred via the fieldbus sercos III are selected and configured in the PNOZmulti Configurator. The base unit and the fieldbus module PNOZ mc10p are connected via a jumper. The fieldbus module is also supplied with voltage via this jumper. After the supply voltage is switched on or the control system PNOZmulti is reset, the fieldbus module PNOZ mc10p is configured and started automatically.

LEDs indicate the status of the fieldbus module on the fieldbus sercos III .

The configuration is described in detail in the PNOZmulti Configurator's online help.

Fieldbus modules
PNOZ mc10p

Input and output data

The data is structured as follows:

- Input area

  The inputs are defined in the master and transferred to the PNOZmulti. Each input has a number, e.g. input bit 4 of byte 1 has the number i12.

- Output range

  The outputs are defined in the PNOZmulti Configurator. Each output that is used is given a number there, e.g. o0, o5... The status of output o0 is stored in bit 0 of byte 0; the status of output o5 is stored in bit 5 of byte 0 etc.

- Output range only: Byte 3

  Bits 0 … 4: Status of LEDs on the PNOZmulti

  – Bit 0: OFAULT
  – Bit 1: IFAULT
  – Bit 2: FAULT
  – Bit 3: DIAG
  – Bit 4: RUN

  Bit 5: Data is being exchanged.

Detailed information on data exchange (tables, segments) is available in the document "Communication Interfaces" in the section entitled "Fieldbus modules".

Assigning the inputs/outputs in the PNOZmulti Configurator to the sercos III inputs/outputs

Virtual inputs on PNOZmulti Configurator	i0 ... I7	i8 ... i15	i16 ... i23
Input data sercos III	Byte 0: Bits 0 … 7	Byte 1: Bits 0 … 7	Byte 2: Bits 0 … 7
Virtual outputs on PNOZmulti Configurator	o0 ... o7	o8 ... o15	o16 ... o23
Output data sercos III	Byte 0: Bits 0 … 7	Byte 1: Bits 0 … 7	Byte 2: Bits 0 … 7

The number of virtual inputs and outputs can be extended to 128 (see document "Communication Interfaces" in the section entitled "Fieldbus modules")

Fieldbus modules
PNOZ mc10p

Block diagram

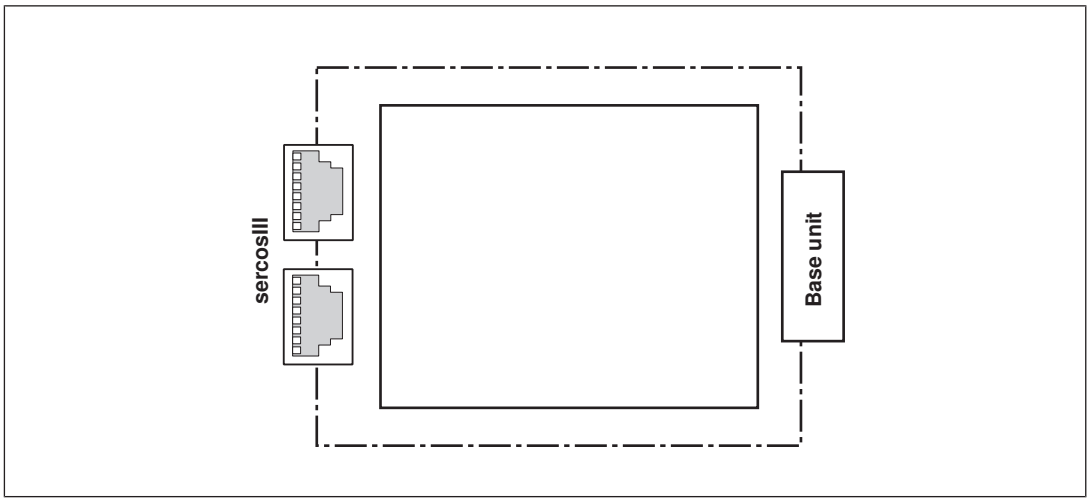

Installation

Dimensions in mm

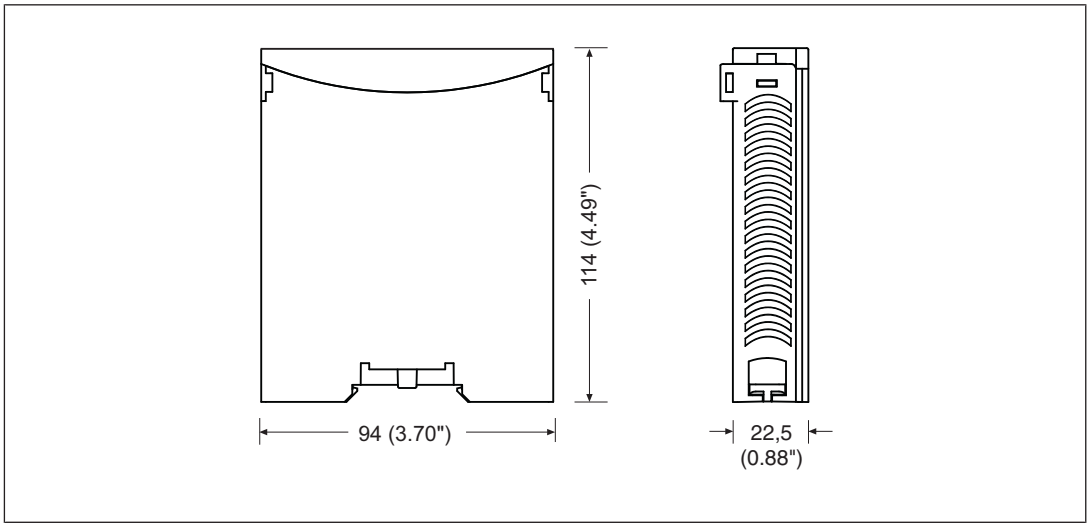

Fieldbus modules
PNOZ mc10p

Commissioning

General wiring guidelines

The wiring is defined in the circuit diagram of the PNOZmulti Configurator.

It is possible to define which inputs and outputs on the safety system will communicate with sercos III.

Please note:

- Information given in the “Technical details” must be followed.
- Use copper wire that can withstand 75 °C.

Please note the following when connecting to sercos III:

- The following minimum requirements of the connection cable and connector must be met:
  - Only use standard industrial Ethernet cable and connectors.
  - Only use double-shielded twisted pair cable and shielded RJ45 connectors (industrial connectors).
  - 100BaseTX cable in accordance with the Ethernet standard (min. Category 5)
- Measures to protect against interference:

  Ensure the requirements for the industrial use of sercos III are met, as stated in the Installation Manual published by the User Group.

Interface assignment

RJ45 socket 8-pin	PIN	Standard
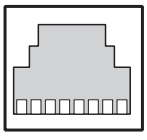	1	TD+ (Transmit+)
	2	TD- (Transmit-)
	3	RD+ (Receive+)
	4	n.c.
	5	n.c.
	6	RD- (Receive-)
	7	n.c.
	8	n.c.

n.c.: Not connected

Fieldbus modules
PNOZ mc10p

Connection example

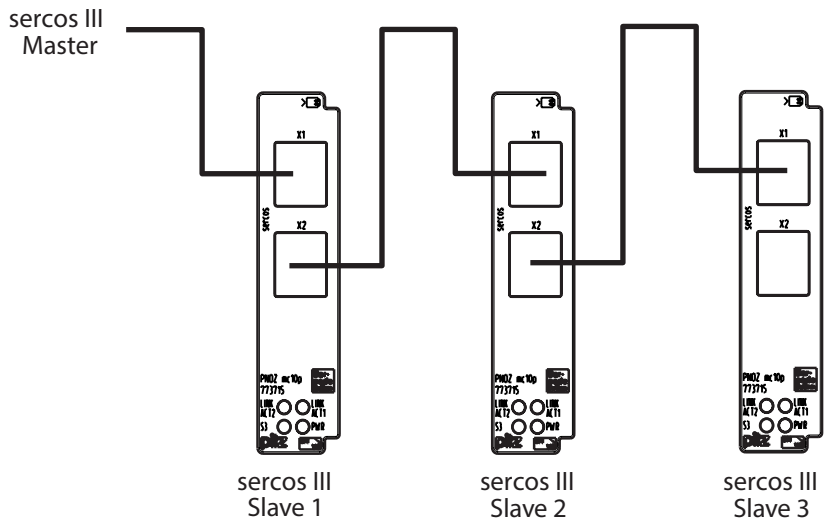

Technical details

General	
Certifications	**CCC, CE, EAC (Eurasian), cULus Listed**
Electrical data	
Supply voltage	
for	**Module supply**
internal	**Via base unit**
Voltage	**5 V**
Kind	**DC**
Voltage tolerance	**-2 %/+2 %**
Power consumption	**2,5 W**
Status indicator	**LED**
Fieldbus interface	
Fieldbus interface	**sercos III**
Device type	**Slave**
Transmission rates	**100 MBit/s**
Connection	**RJ45**
Galvanic isolation	**yes**
Test voltage	**500 V AC**
Times	
Supply interruption before de-energisation	**20 ms**

Fieldbus modules
PNOZ mc10p

Environmental data	
Ambient temperature	
In accordance with the standard	**EN 60068-2-14**
Temperature range	**0 - 60 °C**
Storage temperature	
In accordance with the standard	**EN 60068-2-1/-2**
Temperature range	**-25 - 70 °C**
Climatic suitability	
In accordance with the standard	**EN 60068-2-30, EN 60068-2-78**
Humidity	**93 % r. h. at 40 °C**
Condensation during operation	**Not permitted**
EMC	**EN 61131-2**
Vibration	
In accordance with the standard	**EN 60068-2-6**
Frequency	**10 - 150 Hz**
Acceleration	**1g**
Shock stress	
In accordance with the standard	**EN 60068-2-27**
Acceleration	**15g**
Duration	**11 ms**
Max. operating height above sea level	**2000 m**
Airgap creepage	
In accordance with the standard	**EN 61131-2**
Overvoltage category	**III**
Pollution degree	**2**
Rated insulation voltage	**30 V**
Protection type	
In accordance with the standard	**EN 60529**
Mounting area (e.g. control cabinet)	**IP54**
Housing	**IP20**
Terminals	**IP20**
Mechanical data	
Mounting position	**horizontally on mounting rail**
DIN rail	
Top hat rail	**35 x 7,5 EN 50022**
Recess width	**27 mm**
Material	
Bottom	**PPO UL 94 V0**
Front	**ABS UL 94 V0**

Fieldbus modules
PNOZ mc10p

Mechanical data	
Dimensions	
Height	**94 mm**
Width	**22,5 mm**
Depth	**114 mm**
Weight	**125 g**

Where standards are undated, the 2020-07 latest editions shall apply.

Order reference

Product type	Features	Order no.
PNOZ mc10p	Fieldbus module, sercos III	773 715

Terminator, jumper

Product type	Features	Order no.
PNOZmulti bus terminator	Terminator	779 110
KOP-XE	Jumper	774 639

Fieldbus modules
PNOZ mc12p



Overview

Unit features

Application of the product PNOZ mc12p:

Expansion module for connection to a base unit from the configurable control system PNOZmulti

The product has the following features:

- Can be configured in the PNOZmulti Configurator
- Connection for Ethernet POWERLINK (Ethernet POWERLINK V 2 protocol)
- Station addresses from 1 ... 239, selected via rotary switch
- The minimum cycle time for an application of 20 Byte Output and 50 Byte Input is 350µs. The minimum cycle time is 500 µs at the maximum PDO size of 240 Byte Input and 20 Byte Output (the inputs and outputs in this case are viewed from the Managing Node).
- 24 virtual inputs and outputs on the control system PNOZmulti can be defined in the PNOZmulti Configurator for communication with the fieldbus Ethernet POWERLINK . The number of inputs and outputs can be extended to 128. Please note that when the extended inputs and outputs 24 - 127 are used they have different properties (see document entitled "Communication Interfaces").
- Max. 1 PNOZ mc12p can be connected to the base unit
- Please refer to the document "PNOZmulti System Expansion" for the PNOZmulti base units that can be connected.

Fieldbus modules
PNOZ mc12p

Front view

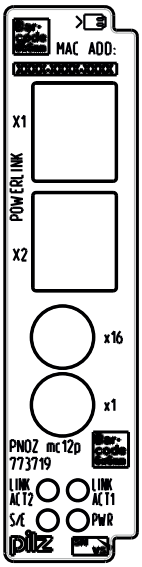

Legend:

- X1, X2 Ethernet POWERLINK interfaces
- LED:
  - LINK ACT1
  - LINK ACT2
  - PWR
  - S/E (Status/Error)

Function description

Functions

The virtual inputs and outputs that are to be transferred via the fieldbus Ethernet POWERLINK are selected and configured in the PNOZmulti Configurator. The base unit and the fieldbus module PNOZ mc12p are connected via a jumper. The fieldbus module is also supplied with voltage via this jumper. After the supply voltage is switched on or the control system PNOZmulti is reset, the fieldbus module PNOZ mc12p is configured and started automatically.

LEDs indicate the status of the fieldbus module on the fieldbus Ethernet POWERLINK .

The configuration is described in detail in the PNOZmulti Configurator's online help.

Fieldbus modules
PNOZ mc12p

Input and output data

The data is structured as follows:

- Input area

  The inputs are defined in the Managing Node and transferred to the PNOZmulti. Each input has a number, e.g. input bit 4 of SDO 2100:02 has the number i12.

Virtual inputs PNOZmulti Configurator	I0 … I7	I8 … I15	I16 … I23
Ethernet POWERLINK	SDO 2100:01: Bit 0 … 7	SDO 2100:02: Bit 0 … 7	SDO 2100:03: Bit 0 … 7

- Output range

  The outputs are defined in the PNOZmulti Configurator. Each output that is used is given a number there, e.g. o0, o5... The state of output o0 is stored in Bit 0 of SDO 2000:01.

Virtual outputs PNOZmulti Configurator	O0 … O7	O8 … O15	O16 … O23
Ethernet POWERLINK	SDO 2000:01: Bit 0 … 7	SDO 2000:02: Bit 0 … 7	SDO 2000:03: Bit 0 … 7

Detailed information on data exchange is available in the document "Communication Interfaces" in the section entitled "Fieldbus modules".

The number of virtual inputs and outputs can be extended to 128 (see document "Communication Interfaces" in the section entitled "Fieldbus modules")

Block diagram

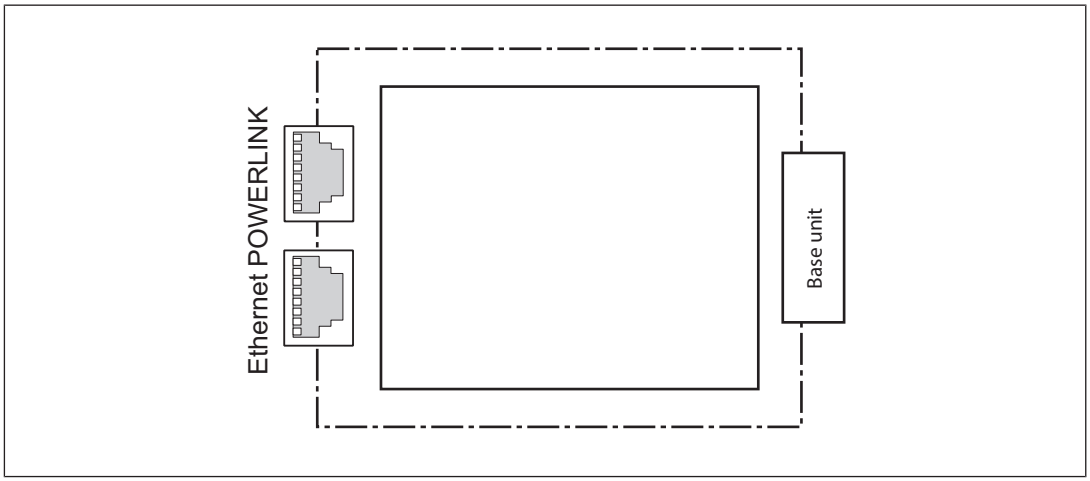

Fieldbus modules
PNOZ mc12p

Installation

Dimensions in mm

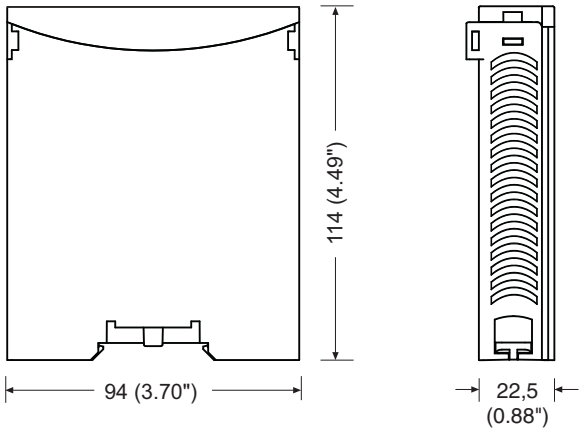

Commissioning

Wiring

The wiring is defined in the circuit diagram of the PNOZmulti Configurator. It is possible to define which inputs and outputs on the safety system will communicate with Ethernet POWERLINK.

Please note:

- Information given in the Technical details [📖 504] must be followed.
- Use copper wiring with a temperature stability of 75 °C.

Please note the following when connecting to Ethernet POWERLINK:

- The following minimum requirements of the connection cable and connector must be met:
  - Only use standard industrial Ethernet cable and connectors.
  - Only use double-shielded twisted pair cable and shielded RJ45 connectors (industrial connectors).
  - 100BaseTX cable in accordance with the Ethernet standard (min. Category 5)
- Measures to protect against interference:

  Ensure the requirements for the industrial use of Ethernet POWERLINK are met, as stated in the Installation Manual published by the User Group.

Fieldbus modules
PNOZ mc12p

Interface assignment

RJ45 socket 8-pin	PIN	Standard
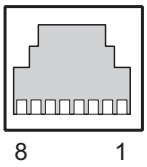	1	TD+ (Transmit+)
	2	TD- (Transmit-)
	3	RD+ (Receive+)
	4	n.c.
	5	n.c.
	6	RD- (Receive-)
	7	n.c.
	8	n.c.

n.c.: Not connected

Connection example

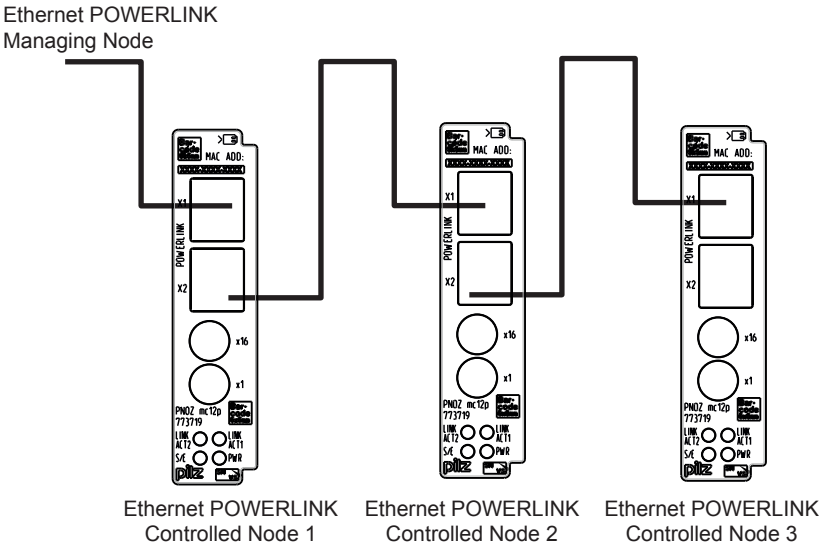

Fieldbus modules
PNOZ mc12p

Technical Details

General	
Certifications	**CCC, CE, EAC (Eurasian), cULus Listed**
Electrical data	
Supply voltage	
for	**Module supply**
internal	**Via base unit**
Voltage	**5 V**
Kind	**DC**
Voltage tolerance	**-2 %/+2 %**
Power consumption	**1,6 W**
Status indicator	**LED**
Fieldbus interface	
Fieldbus interface	**Ethernet POWERLINK V2**
Device type	**Controlled Node**
Transmission rates	**100 MBit/s**
Connection	**RJ45**
Galvanic isolation	**yes**
Times	
Supply interruption before de-energisation	**20 ms**
Environmental data	
Ambient temperature	
In accordance with the standard	**EN 60068-2-14**
Temperature range	**0 - 60 °C**
Storage temperature	
In accordance with the standard	**EN 60068-2-1/-2**
Temperature range	**-25 - 70 °C**
Climatic suitability	
In accordance with the standard	**EN 60068-2-30**
Humidity	**93 % r. h. at 40 °C**
Condensation during operation	**Not permitted**
EMC	**EN 61131-2**
Vibration	
In accordance with the standard	**EN 60068-2-6**
Frequency	**10 - 150 Hz**
Acceleration	**1g**
Shock stress	
In accordance with the standard	**EN 60068-2-27**
Acceleration	**15g**
Duration	**11 ms**

Fieldbus modules
PNOZ mc12p

Environmental data	
Max. operating height above sea level	**2000 m**
Airgap creepage	
In accordance with the standard	**EN 61131-2**
Overvoltage category	**III**
Pollution degree	**2**
Rated insulation voltage	**25 V**
Protection type	
In accordance with the standard	**EN 60529**
Mounting area (e.g. control cabinet)	**IP54**
Housing	**IP20**
Terminals	**IP20**
Potential isolation	
Potential isolation between	**Fieldbus and module voltage**
Type of potential isolation	**Functional insulation**
Rated surge voltage	**500 V**
Mechanical data	
Mounting position	**horizontally on mounting rail**
DIN rail	
Top hat rail	**35 x 7,5 EN 50022**
Recess width	**27 mm**
Material	
Bottom	**PPO UL 94 V0**
Front	**ABS UL 94 V0**
Dimensions	
Height	**94 mm**
Width	**22,5 mm**
Depth	**114 mm**
Weight	**115 g**

Where standards are undated, the 2020-07 latest editions shall apply.

Fieldbus modules
PNOZ mc12p

Order reference

Product

Product type	Features	Order No.
PNOZ mc12p	Fieldbus module, Ethernet POWERLINK	773 719

Accessories

Terminator, jumper

Product type	Features	Order no.
PNOZmulti bus terminator	Terminator	779 110
KOP-XE	Jumper	774 639

Contents	Page
Base units	509
Link modules	577
Communication modules	601
Fieldbus modules	617

Base units
PNOZ mm0p



Overview

Unit features

Application of the product PNOZ mm0p:

Base unit from the configurable control system PNOZmulti

The product has the following features:

- Can be configured in the PNOZmulti Configurator
- Semiconductor outputs:

  4 safety outputs
  Depending on the application, up to PL e of EN ISO 13849-1 and up to SIL CL 3 of EN IEC 62061
- 12 inputs for connecting, for example:
  - E-STOP pushbuttons
  - Two-hand button
  - Safety gate limit switches
  - Start buttons
  - Light beam devices
  - Scanners
  - Enabling switches
  - PSEN
  - Operating mode selector switches
  - Safety mats
- 8 configurable inputs/outputs

  Can be configured as:
  - Inputs (see above for connection options)

  or
  - Outputs for standard applications

Base units
PNOZ mm0p

- 4 configurable outputs
  Can be configured as:
  – Outputs for standard applications
  or
  – Test pulse outputs
- LED indicator for:
  – Error messages
  – Diagnostics
  – Supply voltage
  – Output circuits
  – Input circuits
- Display for:
  – Error messages
  – State of supply voltage
  – State of the inputs and outputs
  – Status information
  – Unit information
- Test pulse outputs used to monitor shorts across the inputs
- Monitoring of shorts between the safety outputs
- Plug-in connection terminals:
  Either spring-loaded terminal or screw terminal available as an accessory (see order reference)
- Rotary knob for menu control

Chip card

To be able to use the product you will need a chip card.

Chip cards are available with memories of 8 kByte and 32 kByte. For large-scale projects we recommend the 32 kByte chip card (see Technical Catalogue: Accessories chapter).

Base units
PNOZ mm0p

Front view

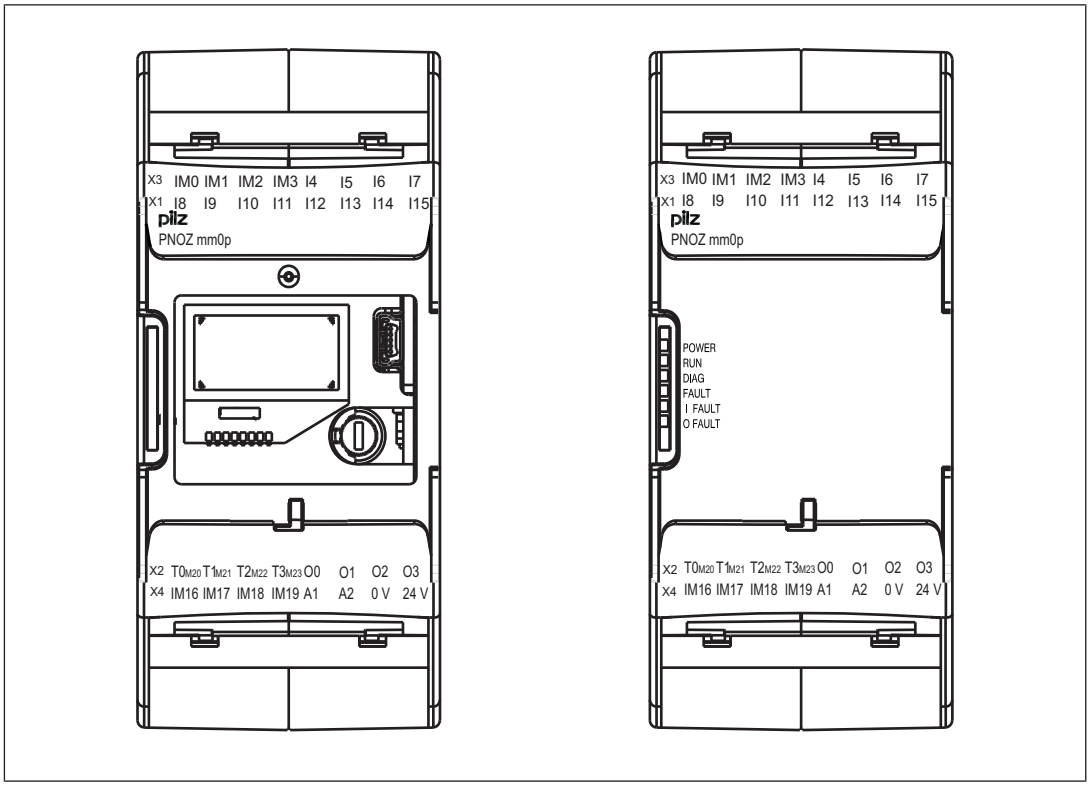

Front view with and without cover

Legend

X1:	Inputs I8 ... I15
X2:	Configurable test pulse/auxiliary outputs T0M20 ... T3M23
	Semiconductor outputs O0 ... O3
X3:	Configurable inputs/outputs IM0 – IM3
	Inputs I4 ... I7
X4:	Configurable inputs/outputs IM16 – IM19
	Supply connections
LEDs:	PWR
	RUN
	DIAG
	FAULT
	I FAULT
	O FAULT

Base units
PNOZ mm0p

Function description

Functions

The function of the safety system's inputs and outputs depends on the safety circuit created using the PNOZmulti Configurator. A chip card is used to download the safety circuit to the base unit. The base unit has 2 microcontrollers that monitor each other. They evaluate the input circuits and switch the outputs accordingly.

The LEDs indicate the status of the PNOZmulti safety system.

The LC display indicates the status of the inputs/outputs and the supply voltage.

The online help on the PNOZmulti Configurator contains descriptions of the operating modes and all the functions of the PNOZmulti safety system, plus connection examples.

System reaction time

Calculation of the maximum reaction time between an input switching off and a linked output in the system switching off is described in the document "PNOZmulti System Expansion [30]".

Block diagram

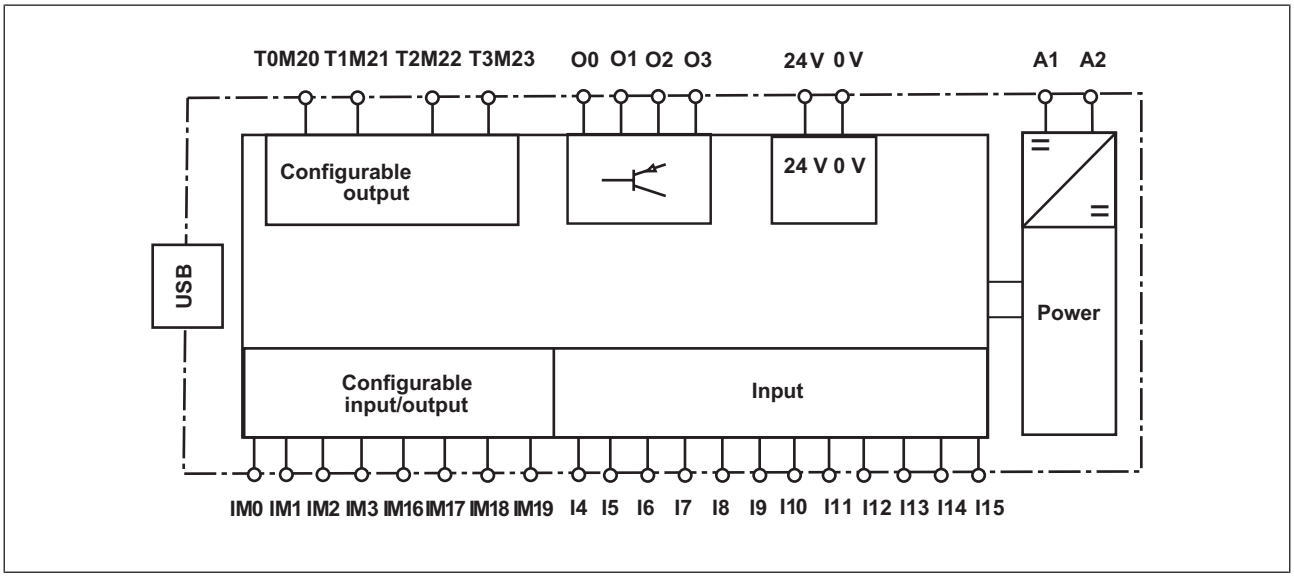

Base units
PNOZ mm0p

Installation

Dimensions

*with spring-loaded terminals

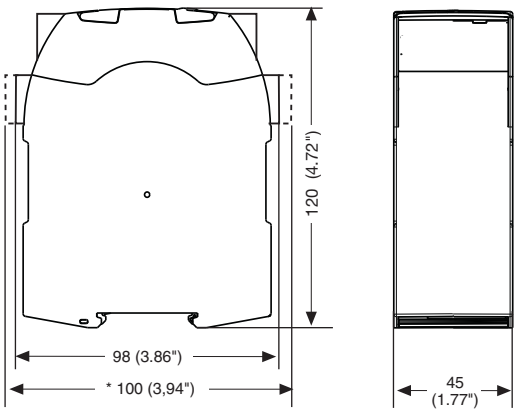

Commissioning

General wiring guidelines

The wiring is defined in the circuit diagram in the Configurator. There you can select the inputs that are to perform a safety function and the outputs that are to switch this safety function.

Please note:

- Information given in the Technical details [518] must be followed.
- Outputs O0 to O3 are semiconductor outputs
- Use copper wiring with a temperature stability of 75 °C.
- Adequate protection must be provided on all output contacts with inductive loads.
- The safety system and input circuits must always be supplied by a single power supply. The power supply must meet the regulations for extra low voltages with protective separation.
- Test pulse outputs must exclusively be used to test the inputs. They must not be used to drive loads.
  Do not route the test pulse lines together with actuator cables within an unprotected multicore cable.
- Test pulse outputs are also used to supply safety mats that trigger a short circuit.
  Test pulses that are used for the safety mat may not be reused for other purposes.

Base units
PNOZ mm0p

Preparing for operation

Function test during commissioning

Using the chip card

Make sure that you do not bend the chip card as you insert it into the chip card slot.

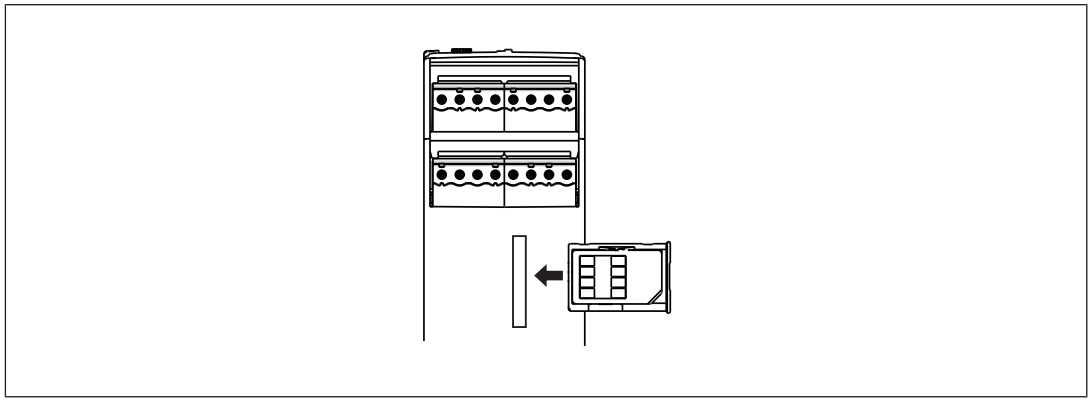

Commissioning the PNOZmulti safety system

Procedure:

- Wire the inputs and outputs on the base unit in accordance with the circuit diagram.
- Connect the supply voltage:
  - Supply voltage for the control system:
  - Terminal A1: + 24 VDC
  - Terminal A2: 0 V
  - Supply voltage for the semiconductor outputs:
  - 24 V terminal: + 24 VDC
  - 0V terminal: 0 V

Please note: The supply voltage for the semiconductor outputs must always be present, even if you are not using the semiconductor outputs.

Load project from chip card

Procedure:

- Insert the chip card containing the current project into the card slot on the base unit.
- Switch on the supply voltage. The LC display shows the project name, CRC sum and the date the project was created. Please check this information.
- Load the project by pressing the rotary knob. For the project to be downloaded, the rotary knob must be held down for between 3 and 8 seconds. Once the project has been successfully downloaded, the status of the inputs and outputs will be shown on the display.

Base units
PNOZ mm0p

Load project via USB port

Procedure:

- Insert a chip card into the card slot on the base unit.
- Connect the computer containing the PNOZmulti Configurator to the base unit via the USB port.
- Switch on the supply voltage.
- Download the project (see PNOZmulti Configurator's online help).
- Once the project has been successfully downloaded, the status of the inputs and outputs and the supply voltage will be shown on the display. The "RUN" LED will be lit.

Connection

Supply voltage	AC	DC
For the safety system	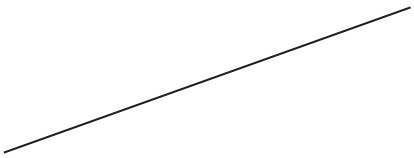	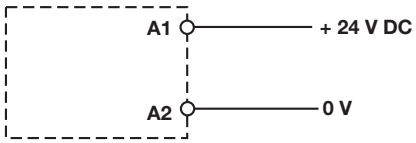
For the semiconductor outputs Must always be present, even if the semiconductor outputs are not used	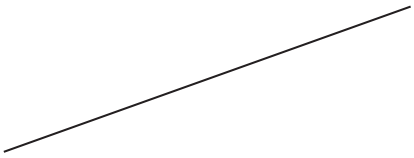	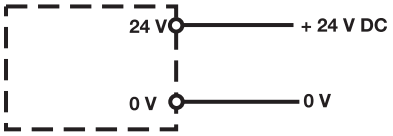

Input circuit	Single-channel	Dual-channel
E-STOP **without** detection of shorts across contacts	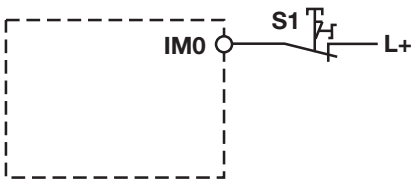	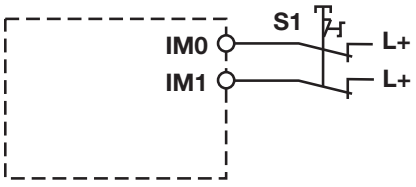
E-STOP **with** detection of shorts across contacts	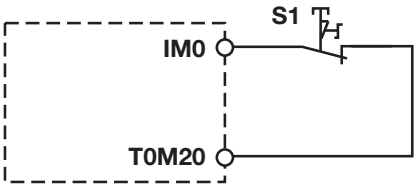	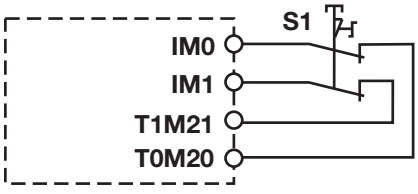

Base units
PNOZ mm0p

Start circuit	Input circuit without detection of shorts across contacts	Input circuit with detection of shorts across contacts
	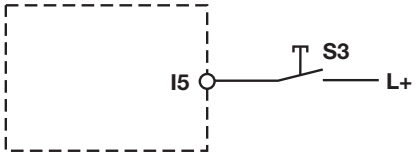	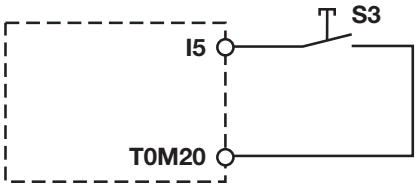
Redundant output	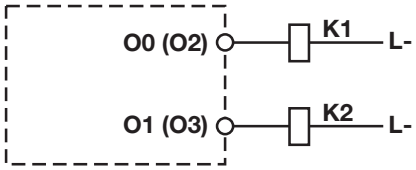	
Single output	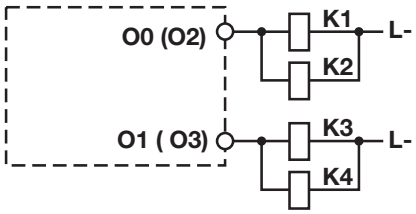	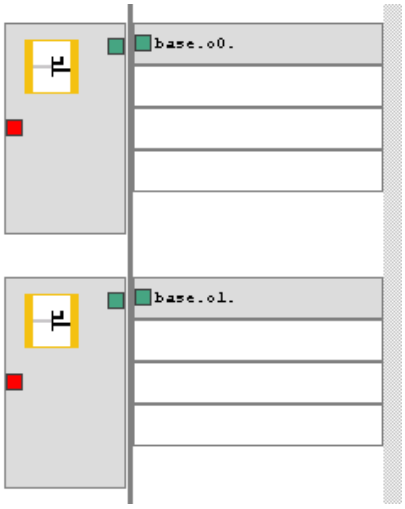
Single output with advanced fault detection*	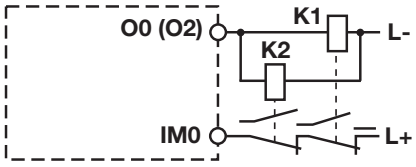	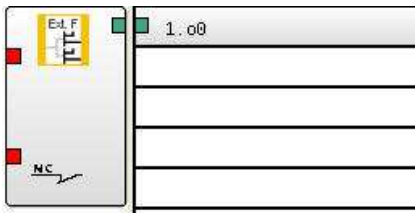

*Two loads may be connected to each safety output with advanced fault detection, even on applications in accordance with EN IEC 62061, SIL CL 3. Prerequisite: Feedback loop is connected, shorts across contacts and external power sources are excluded (e.g. through separate multicore cables). Please note that, in the event of an error in the feedback loop, the safety system switches to a safe condition and shuts down **all** the outputs.

Base units
PNOZ mm0p

Feedback loop	Redundant output	
Contacts from external contactors	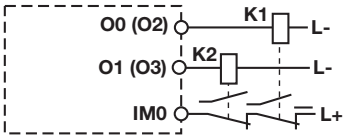	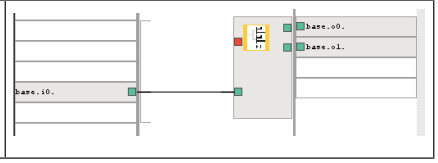

Connection example

Dual-channel E-STOP and safety gate wiring, monitored start (IM18), feedback loop (IM16)

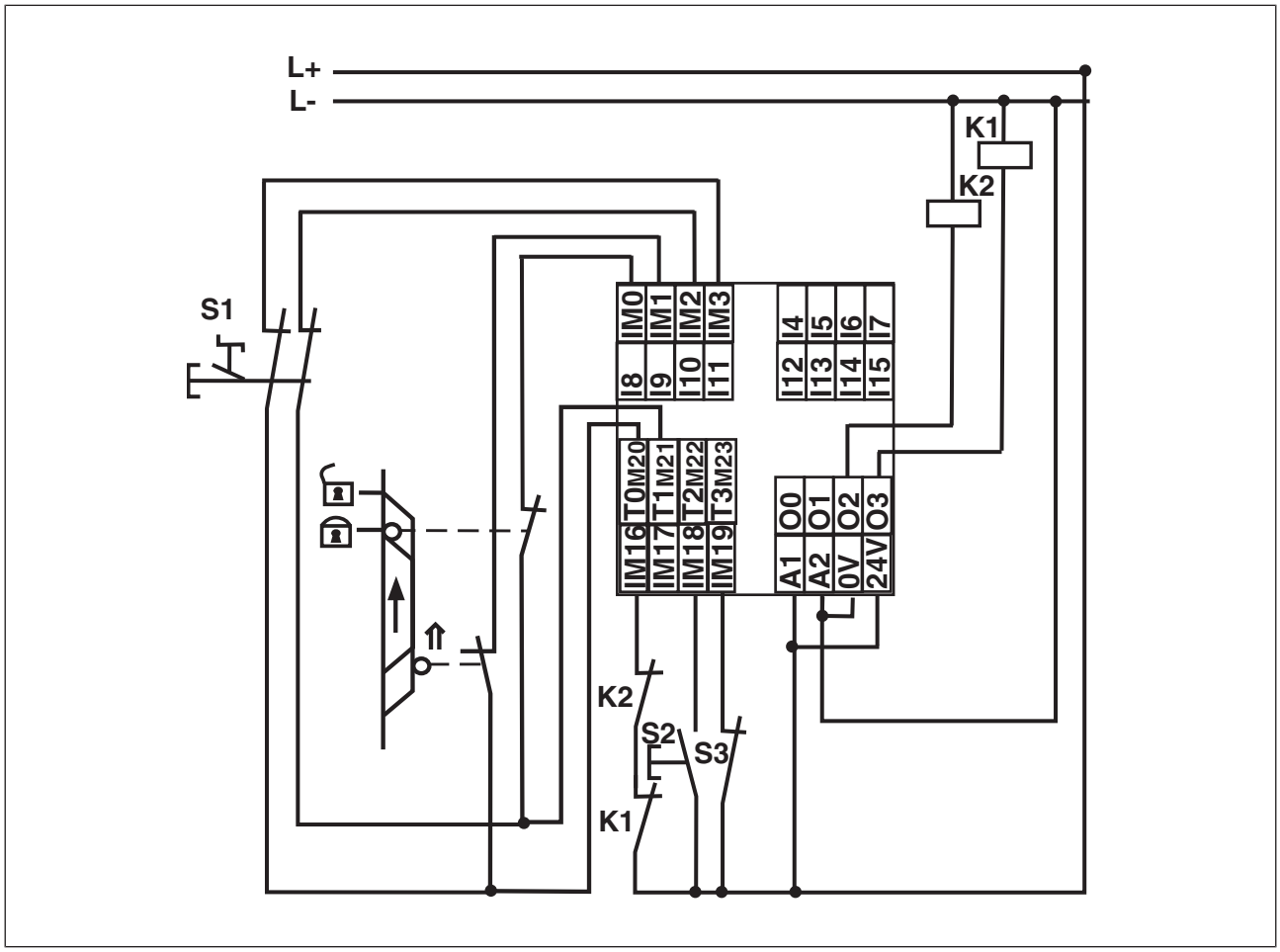

Base units
PNOZ mm0p

Technical details

General	
Certifications	**BG, CCC, CE, EAC (Eurasian), KCC, TÜV, cULus Listed**
Electrical data	
Supply voltage	
for	**Supply to the system**
Voltage	**24,0 V**
Kind	**DC**
Voltage tolerance	**-15 %/+20 %**
Output of external power supply (DC)	**35,0 W**
Output of external power supply (DC) at no load	**8,0 W**
Residual ripple DC	**5 %**
Supply voltage	
for	**Supply to the SC outputs**
Voltage	**24 V**
Kind	**DC**
Voltage tolerance	**-15 %/+20 %**
Output of external power supply (DC)	**192,0 W**
Status indicator	**Display, LED**
Configurable inputs/outputs (inputs or auxiliary outputs)	
Number	**8**
Galvanic isolation	**No**
Configurable inputs	
Input voltage in accordance with EN 61131-2 Type 1	**24,0 V**
Input current at rated voltage	**5 mA**
Min. pulse duration	**16 ms**
Pulse suppression	**0,6 ms**
Signal level at "1"	**15 ... 30 V DC**
Signal level at "0"	**-3 ... +5 V DC**
Maximum input delay	**4,0 ms**
Configurable auxiliary outputs	
Voltage	**24,0 V**
Output current	**75 mA**
Power	**1,8 W**
Short circuit-proof	**yes**
Residual current at "0"	**0,5 mA**
Voltage at "1"	**UB - 2 V at 0.1 A**

Base units
PNOZ mm0p

Inputs	
Number	**12**
Signal level at "0"	**-3 - +5 V DC**
Signal level at "1"	**15 - 30 V DC**
Input voltage in accordance with EN 61131-2 Type 1	**24 V DC**
Input current at rated voltage	**5 mA**
Min. pulse duration	**16 ms**
Pulse suppression	**0,6 ms**
Maximum input delay	**4 ms**
Potential isolation	**No**
Semiconductor outputs	
Number	**4**
Switching capability	
Voltage	**24 V**
Current	**2,0 A**
Power	**48 W**
Signal level at "1"	**UB - 0.5 VDC at 2 A**
Residual current at "0"	**0,5 mA**
Max. capacitive load	**1 µF**
Max. duration of off time during self test	**330 µs**
Switch-off delay	**30 ms**
Potential isolation	**yes**
Short circuit-proof	**yes**
Test pulse outputs	
Number of test pulse outputs	**4**
Voltage	**24 V**
Current	**0,1 A**
Max. duration of off time during self test	**5 ms**
Short circuit-proof	**yes**
Potential isolation	**No**
Times	
Switch-on delay	**5,00 s**
Supply interruption before de-energisation	**20 ms**
Simultaneity, channel 1 and 2 max.	**3 s**
Simultaneity in the two-hand circuit	**0,5 s**
Environmental data	
Ambient temperature	
In accordance with the standard	**EN 60068-2-14**
Temperature range	**0 - 60 °C**
Forced convection in control cabinet off	**55 °C**

Base units
PNOZ mm0p

Environmental data	
Storage temperature	
In accordance with the standard	**EN 60068-2-1/-2**
Temperature range	**-25 - 70 °C**
Climatic suitability	
In accordance with the standard	**EN 60068-2-30, EN 60068-2-78**
Humidity	**93 % r. h. at 40 °C**
Condensation during operation	**Not permitted**
EMC	**EN 61131-2**
Vibration	
In accordance with the standard	**EN 60068-2-6**
Frequency	**10,0 - 150,0 Hz**
Acceleration	**1 g**
Shock stress	
In accordance with the standard	**EN 60068-2-27**
Acceleration	**15 g**
Duration	**11 ms**
Max. operating height above sea level	**2000 m**
Airgap creepage	
In accordance with the standard	**EN 61131-2**
Overvoltage category	**II**
Pollution degree	**2**
Rated insulation voltage	**30 V**
Rated impulse withstand voltage	**2,50 kV**
Protection type	
In accordance with the standard	**EN 60529**
Mounting area (e.g. control cabinet)	**IP54**
Housing	**IP20**
Terminals	**IP20**
Potential isolation	
Potential isolation between	**SC output and system voltage**
Type of potential isolation	**Basic insulation**
Rated surge voltage	**2500 V**
Mechanical data	
Mounting position	**horizontally on mounting rail**
DIN rail	
Top hat rail	**35 x 7,5 EN 50022**
Recess width	**27 mm**
Max. cable length	
Max. cable length per input	**1,0 km**
Sum of individual cable lengths at the test pulse output	**2 km**

Base units
PNOZ mm0p

Mechanical data	
Material	
Bottom	**PC**
Front	**PC**
Top	**PC**
1 core flexible	**0,25 - 2,50 mm², 24 - 12 AWG**
2 core with the same cross section, flexible without crimp connectors or with TWIN crimp connectors	**0,20 - 1,50 mm², 24 - 16 AWG**
Torque setting with screw terminals	**0,50 Nm**
Connection type	**Spring-loaded terminal, screw terminal**
Conductor cross section with spring-loaded terminals: Flexible with/without crimp connector	**0,20 - 2,50 mm², 24 - 12 AWG**
Spring-loaded terminals: Terminal points per connection	**2**
Stripping length with spring-loaded terminals	**9,0 mm**
Dimensions	
Height	**100,0 mm**
Width	**45,0 mm**
Depth	**120,0 mm**
Weight	**226 g**

Where standards are undated, the 2010-08 latest editions shall apply.

Safety characteristic data

Unit	Operating mode	EN ISO 13849-1: 2015 PL	EN ISO 13849-1: 2015 Category	EN 62061 SIL CL	EN 62061 PFH_D [1/h]	EN ISO 13849-1: 2015 T_M [year]
Logic						
CPU	**2-channel**	**PL e**	**Cat. 4**	**SIL CL 3**	**1,54E-09**	**20**
Input						
SC inputs	**1-channel**	**PL d**	**Cat. 2**	**SIL CL 2**	**3,95E-09**	**20**
SC inputs	**2-channel**	**PL e**	**Cat. 4**	**SIL CL 3**	**4,61E-10**	**20**
SC inputs	**Short circuit-forming safety mats**	**PL d**	**Cat. 3**	**SIL CL 2**	**1,86E-09**	**20**
SC inputs	**1-ch., pulsed light barrier**	**PL e**	**Cat. 4**	**SIL CL 3**	**3,95E-10**	**20**

Base units
PNOZ mm0p

Output						
SC outputs	**1-channel with advanced fault detection**	**PL e**	**Cat. 4**	**SIL CL 3**	**7,65E-10**	**20**
SC outputs	**1-channel**	**PL d**	**Cat. 2**	**SIL CL 2**	**8,90E-10**	**20**
SC outputs	**2-channel**	**PL e**	**Cat. 4**	**SIL CL 3**	**7,86E-10**	**20**

Explanatory notes for the safety-related characteristic data:

- The SIL CL value in accordance with EN 62061 corresponds to the SIL value in accordance with EN 61508.
- T_M is the maximum mission time in accordance with EN ISO 13849-1. The value also applies as the retest interval in accordance with EN 61508-6 and IEC 61511 and as the proof test interval and mission time in accordance with EN 62061.

All the units used within a safety function must be considered when calculating the safety characteristic data.

Supplementary data

Maximum capacitive load C (µF) with load current I (A) at the semiconductor outputs

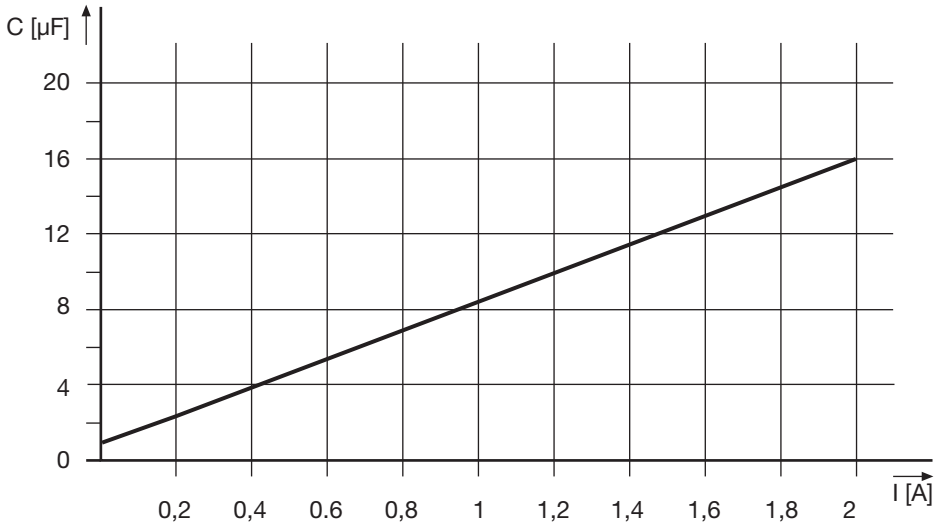

Base units
PNOZ mm0p

Maximum permitted total current of the semiconductor outputs

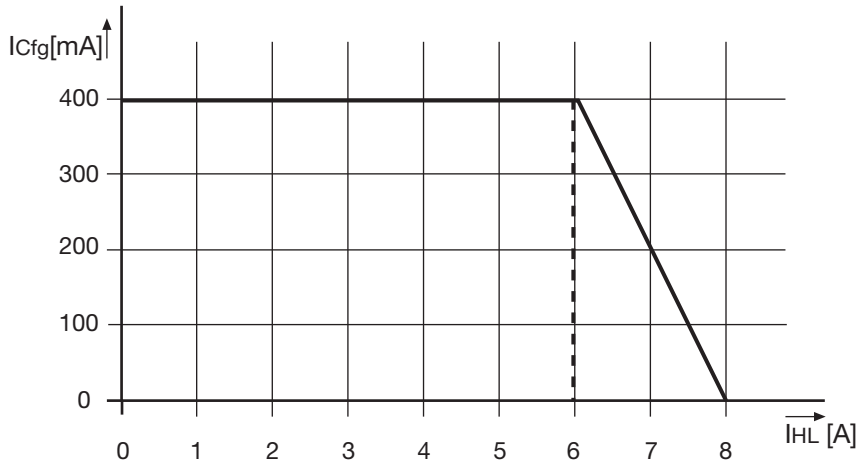

I_{Cfg}: Total current of the configurable semiconductor outputs (auxiliary outputs)

I_{HL}: Total current: Semiconductor outputs (safety outputs)

Order reference

Order reference		

Product type	Features	Order no.
PNOZ mm0p	Base unit	772 000

Terminals

Product type	Features	Order no.
PNOZ s Set1 spring loaded terminals	1 set of spring-loaded terminals	751 008
PNOZ s Set1 screw terminals	1 set of screw terminals	750 008

Cable

Product type	Features	Order no.
PSSu A USB-CAB03	Mini USB cable, 3 m	312 992
PSSu A USB-CAB05	Mini USB cable, 5 m	312 993

Base units
PNOZ mm0p-T



Overview

Unit features

Application of the product PNOZ mm0p-T:

Base unit from the configurable control system PNOZmulti

The product has the following features:

- Can be configured in the PNOZmulti Configurator
- Semiconductor outputs:

  4 safety outputs
  Depending on the application, up to PL e of EN ISO 13849-1 and up to SIL CL 3 of EN IEC 62061
- 12 inputs for connecting, for example:
  - E-STOP pushbuttons
  - Two-hand pushbuttons
  - Safety gate limit switches
  - Reset buttons
  - Light beam devices
  - Scanners
  - Enabling switches
  - PSEN
  - Operating mode selector switches
  - Pressure sensitive mats
- 8 configurable inputs/outputs

  Can be configured as:
  - Inputs (see above for connection options)

  or
  - Outputs for standard applications

Base units
PNOZ mm0p-T

- 4 configurable outputs
  Can be configured as:
  – Outputs for standard applications
  or
  – Test pulse outputs
- LED for:
  – Error messages
  – Diagnostics
  – Supply voltage
  – State of the inputs
  – State of the outputs
- Test pulse outputs used to monitor shorts across the inputs
- Monitoring of shorts between the safety outputs
- Plug-in connection terminals:
  Either spring-loaded terminal or screw terminal available as an accessory (see order reference)
- Pushbutton to change the operating status and download the project.
- Coated version:
  Increased environmental requirements (see Technical details [📖 533])

Chip card

To be able to use the product you will need a chip card.

Chip cards are available with memories of 8 kByte and 32 kByte. For large-scale projects we recommend the 32 kByte chip card (see Technical Catalogue: Accessories chapter).

Base units
PNOZ mm0p-T

Front view

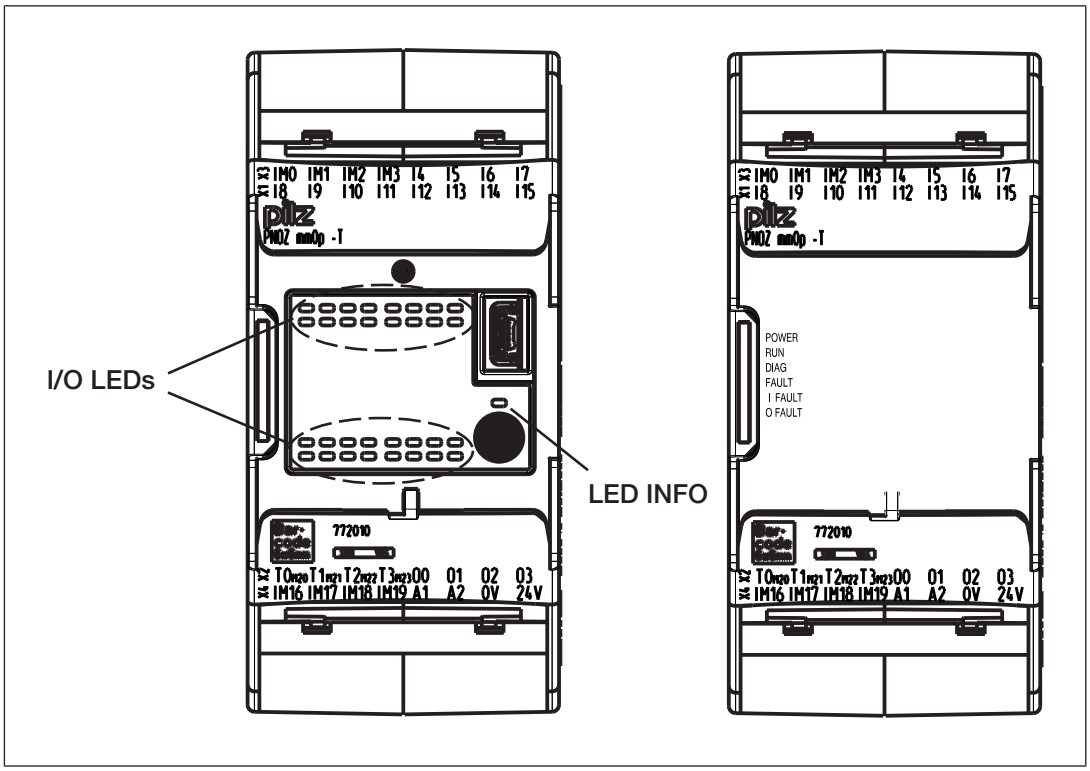

Front view with and without cover

Legend

- X1:
  - Inputs I8 ... I15
- X2:
  - Configurable test pulse/auxiliary outputs T0M20 ... T3M23
  - Semiconductor outputs O0 ... O3
- X3:
  - Configurable inputs/outputs IM0 – IM3
  - Inputs I4 ... I7
- X4:
  - Configurable inputs/outputs IM16 – IM19
  - Supply connections
- LEDs:
  - POWER
  - RUN
  - DIAG

– FAULT
– I FAULT
– O FAULT
– INFO
– I/O

Function description

Functions

The function of the safety system's inputs and outputs depends on the safety circuit created using the PNOZmulti Configurator. A chip card is used to download the safety circuit to the base unit. The base unit has 2 microcontrollers that monitor each other. They evaluate the input circuits and switch the outputs accordingly.

The LEDs indicate the status of the safety system plus the inputs and outputs.

The online help on the PNOZmulti Configurator contains descriptions of the operating modes and all the functions of the PNOZmulti safety system, plus connection examples.

System reaction time

Calculation of the maximum reaction time between an input switching off and a linked output in the system switching off is described in the document "PNOZmulti System Expansion [📖 30]".

Block diagram

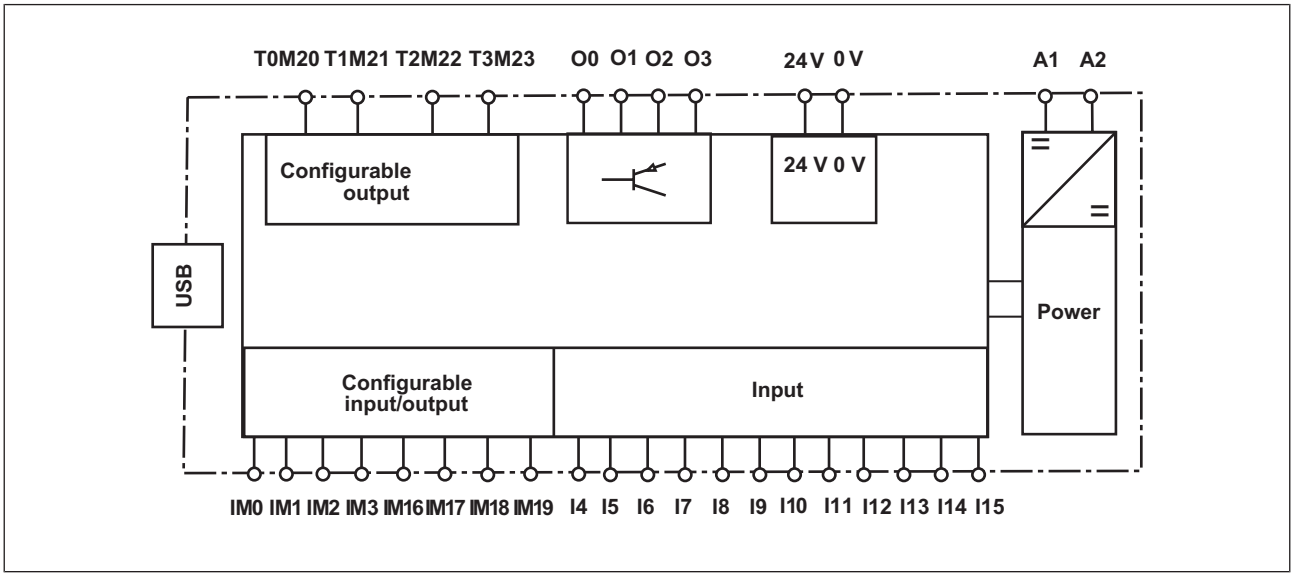

Base units
PNOZ mm0p-T

Installation

Dimensions

*with spring-loaded terminals

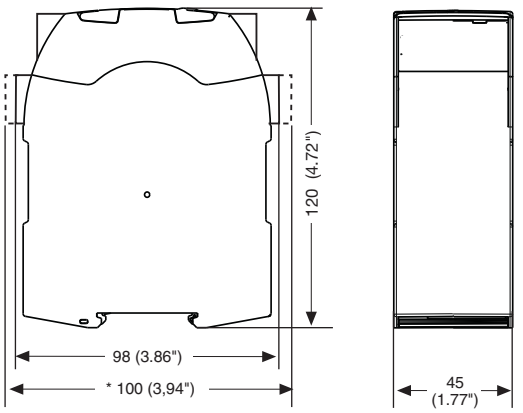

Commissioning

General wiring guidelines

The wiring is defined in the circuit diagram in the Configurator. There you can select the inputs that are to perform a safety function and the outputs that are to switch this safety function.

Please note:

- Information given in the Technical details [533] must be followed.
- Outputs O0 to O3 are semiconductor outputs
- Use copper wiring with a temperature stability of 75 °C.
- Adequate protection must be provided on all output contacts with inductive loads.
- The safety system and input circuits must always be supplied by a single power supply. The power supply must meet the regulations for extra low voltages with protective separation.
- Test pulse outputs must exclusively be used to test the inputs. They must not be used to drive loads.
  Do not route the test pulse lines together with actuator cables within an unprotected multicore cable.
- Test pulse outputs are also used to supply safety mats that trigger a short circuit.
  Test pulses that are used for the safety mat may not be reused for other purposes.

Base units
PNOZ mm0p-T

Preparing for operation

Function test during commissioning

Using the chip card

Make sure that you do not bend the chip card as you insert it into the chip card slot.

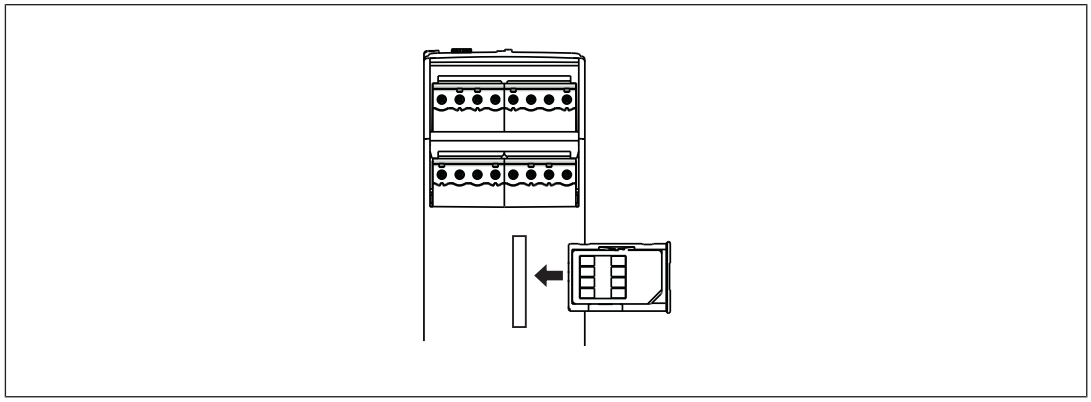

Commissioning the PNOZmulti safety system

Procedure:

- Wire the inputs and outputs on the base unit in accordance with the circuit diagram.
- Connect the supply voltage:
  - Supply voltage for the control system:
  - Terminal A1: + 24 VDC
  - Terminal A2: 0 V
  - Supply voltage for the semiconductor outputs:
  - 24 V terminal: + 24 VDC
  - 0V terminal: 0 V

Please note: The supply voltage for the semiconductor outputs must always be present, even if you are not using the semiconductor outputs.

Load project from chip card

Procedure:

- Insert the chip card containing the current project into the card slot on the base unit.
- Switch on the supply voltage. The INFO LED lights when a new or modified project is present.

Base units
PNOZ mm0p-T

- Load the project by pressing the pushbutton. For the project to be downloaded, the pushbutton must be held down for between 4 and 8 seconds. Release the pushbutton while the INFO LED flashes rapidly.
  If you hold the pushbutton down for too long, the process will be aborted and the project will not be downloaded.

Load project via USB port

Procedure:

- Insert a chip card into the card slot on the base unit.
- Connect the computer containing the PNOZmulti Configurator to the base unit via the USB port.
- Switch on the supply voltage.
- Download the project (see PNOZmulti Configurator's online help).
- Once the project has been successfully downloaded, the status of the inputs and outputs and the supply voltage will be shown via the LEDs. The "RUN" LED is lit.

Connection

Supply voltage	AC	DC
For the safety system	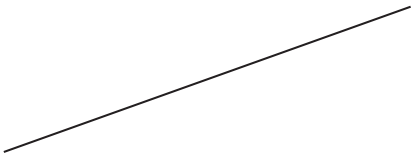	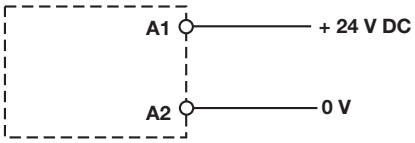
For the semiconductor outputs Must always be present, even if the semiconductor outputs are not used	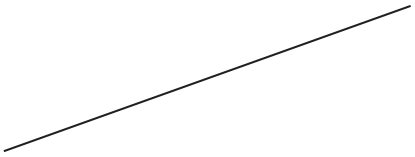	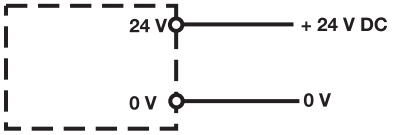

Input circuit	Single-channel	Dual-channel
E-STOP **without** detection of shorts across contacts	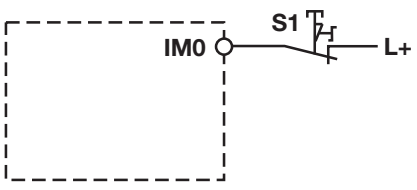	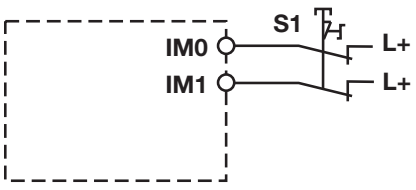
E-STOP **with** detection of shorts across contacts	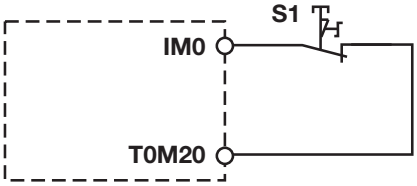	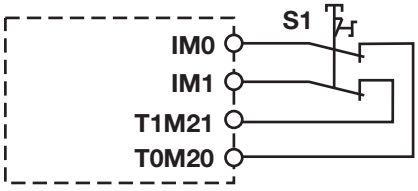

Base units
PNOZ mm0p-T

Start circuit	Input circuit without detection of shorts across contacts	Input circuit with detection of shorts across contacts
	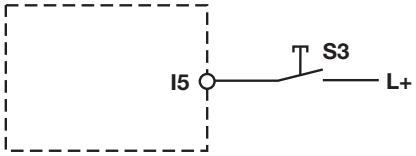	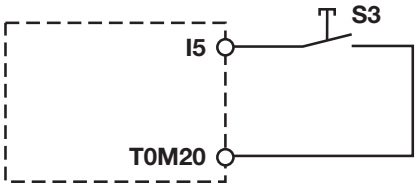
Redundant output	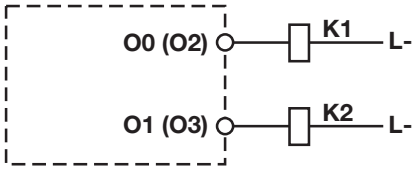	
Single output	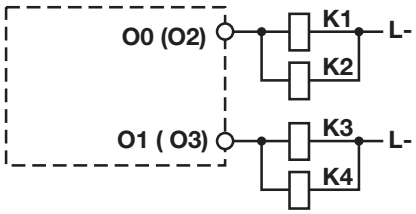	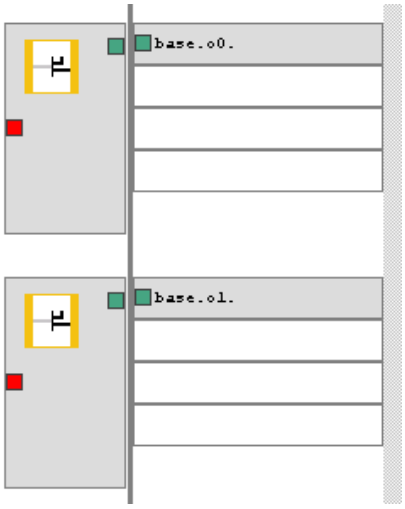
Single output with advanced fault detection*	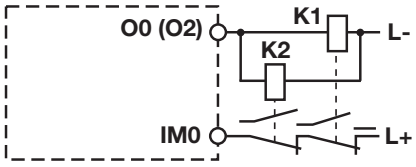	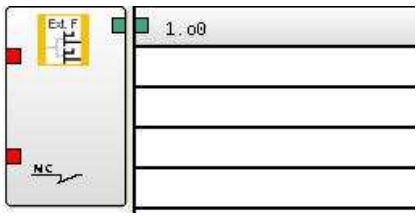

*Two loads may be connected to each safety output with advanced fault detection, even on applications in accordance with EN IEC 62061, SIL CL 3. Prerequisite: Feedback loop is connected, shorts across contacts and external power sources are excluded (e.g. through separate multicore cables). Please note that, in the event of an error in the feedback loop, the safety system switches to a safe condition and shuts down **all** the outputs.

Base units
PNOZ mm0p-T

Feedback loop	Redundant output	
Contacts from external contactors	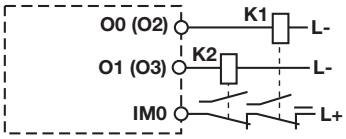	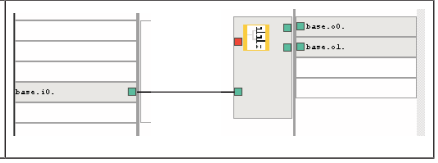

Connection example

Dual-channel E-STOP and safety gate wiring, monitored start (IM18), feedback loop (IM16)

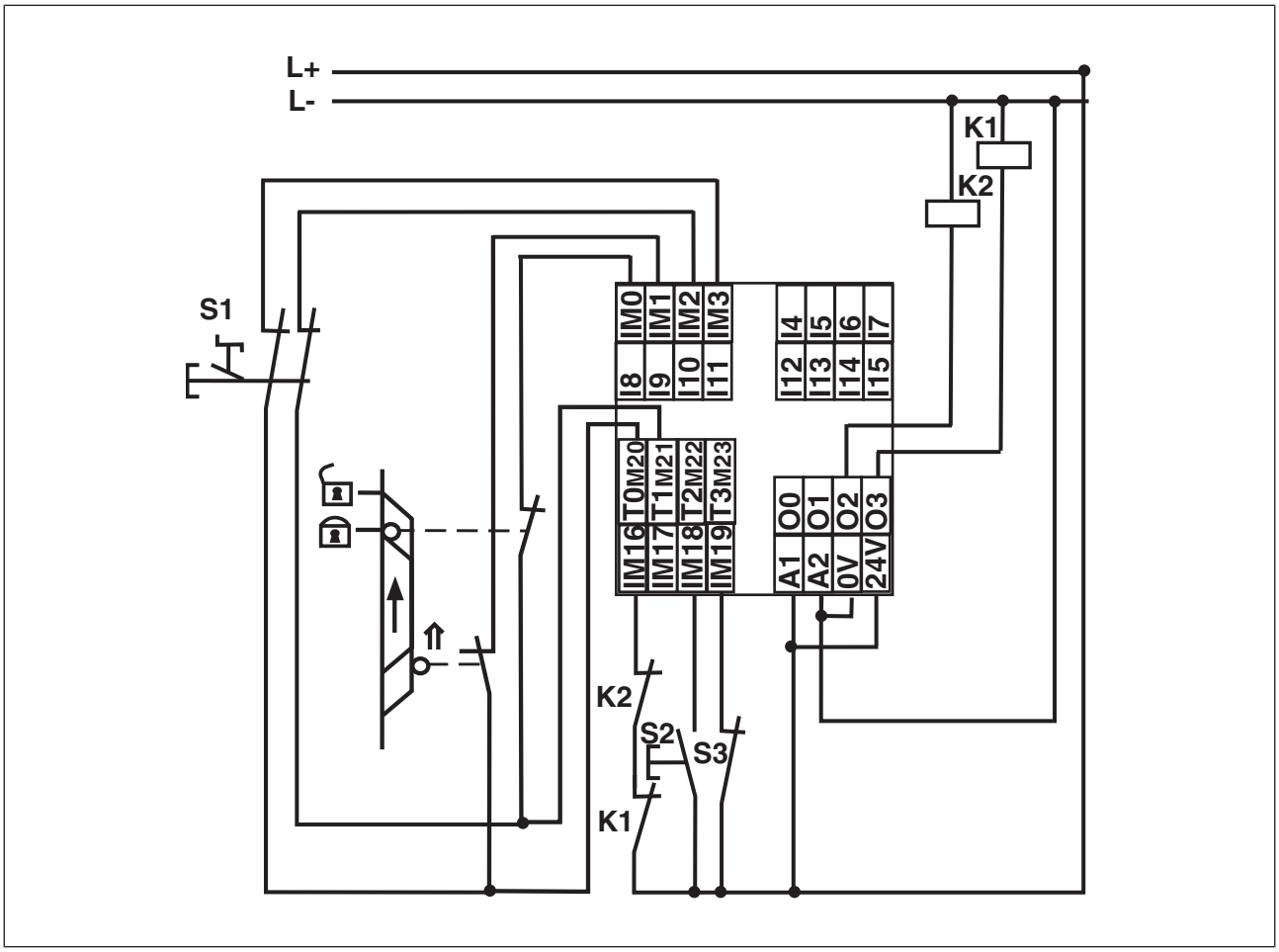

Base units
PNOZ mm0p-T

Technical details

General	
Certifications	**BG, CCC, CE, EAC (Eurasian), TÜV, cULus Listed**
Electrical data	
Supply voltage	
for	**Supply to the system**
Voltage	**24,0 V**
Kind	**DC**
Voltage tolerance	**-15 %/+20 %**
Output of external power supply (DC)	**35,0 W**
Output of external power supply (DC) at no load	**8,0 W**
Residual ripple DC	**5 %**
Supply voltage	
for	**Supply to the SC outputs**
Voltage	**24 V**
Kind	**DC**
Voltage tolerance	**-15 %/+20 %**
Output of external power supply (DC)	**192,0 W**
Potential isolation	**yes**
Status indicator	**LED**
Configurable inputs/outputs (inputs or auxiliary outputs)	
Number	**8**
Potential isolation	**No**
Galvanic isolation	**No**
Configurable inputs	
Input voltage in accordance with EN 61131-2 Type 1	**24,0 V**
Input current at rated voltage	**5 mA**
Min. pulse duration	**16 ms**
Pulse suppression	**0,6 ms**
Signal level at "1"	**15 ... 30 V DC**
Signal level at "0"	**-3 ... +5 V DC**
Maximum input delay	**4,0 ms**
Configurable auxiliary outputs	
Voltage	**24,0 V**
Output current	**75 mA**
Power	**1,8 W**
Short circuit-proof	**yes**
Residual current at "0"	**0,5 mA**
Voltage at "1"	**UB - 2 V at 0.1 A**

Base units
PNOZ mm0p-T

Inputs	
Number	**12**
Signal level at "0"	**-3 - +5 V DC**
Signal level at "1"	**15 - 30 V DC**
Input voltage in accordance with EN 61131-2 Type 1	**24 V DC**
Input current at rated voltage	**5 mA**
Input current range	**2,5 - 5,3 mA**
Min. pulse duration	**16 ms**
Pulse suppression	**0,6 ms**
Maximum input delay	**4 ms**
Potential isolation	**No**
Semiconductor outputs	
Number	**4**
Switching capability	
Voltage	**24 V**
Current	**2,0 A**
Power	**48 W**
Voltage	**24 V**
Current	**1 A**
Power	**24 W**
Signal level at "1"	**UB - 0.5 VDC at 2 A**
Residual current at "0"	**0,5 mA**
Max. capacitive load	**1 µF**
Max. duration of off time during self test	**330 µs**
Switch-off delay	**30 ms**
Potential isolation	**yes**
Short circuit-proof	**yes**
Test pulse outputs	
Number of test pulse outputs	**4**
Voltage	**24 V**
Current	**0,1 A**
Max. duration of off time during self test	**5 ms**
Short circuit-proof	**yes**
Potential isolation	**No**
Times	
Switch-on delay	**5,00 s**
Supply interruption before de-energisation	**20 ms**
Simultaneity, channel 1 and 2 max.	**3 s**
Simultaneity in the two-hand circuit	**0,5 s**

Base units
PNOZ mm0p-T

Environmental data	
Ambient temperature	
In accordance with the standard	**EN 60068-2-14**
Temperature range	**-25 - 60 °C**
Storage temperature	
In accordance with the standard	**EN 60068-2-1/-2**
Temperature range	**-25 - 70 °C**
Climatic suitability	
In accordance with the standard	**EN 60068-2-30, EN 60068-2-78**
Humidity	**93 % r. h. at 40 °C**
Condensation during operation	**Short-term (only with separated extra low voltage)**
EMC	**EN 61131-2**
Vibration	
In accordance with the standard	**EN 60068-2-6**
Frequency	**10,0 - 150,0 Hz**
Acceleration	**1 g**
Shock stress	
In accordance with the standard	**EN 60068-2-27**
Number of shocks	**3**
Acceleration	**15 g**
Duration	**11 ms**
In accordance with the standard	**EN 60068-2-27**
Number of shocks	**500**
Acceleration	**25 g**
Duration	**6 ms**
Max. operating height above sea level	**2000 m**
Airgap creepage	
In accordance with the standard	**EN 61131-2**
Overvoltage category	**II**
Pollution degree	**2**
Rated insulation voltage	**30 V**
Rated impulse withstand voltage	**2,50 kV**
Protection type	
In accordance with the standard	**EN 60529**
Mounting area (e.g. control cabinet)	**IP54**
Housing	**IP20**
Terminals	**IP20**
Potential isolation	
Potential isolation between	**SC output and system voltage**
Type of potential isolation	**Basic insulation**
Rated surge voltage	**2500 V**

Base units
PNOZ mm0p-T

Mechanical data	
Mounting position	**horizontally on mounting rail**
DIN rail	
Top hat rail	**35 x 7,5 EN 50022**
Recess width	**27 mm**
Max. cable length	
Max. cable length per input	**1,0 km**
Sum of individual cable lengths at the test pulse output	**2 km**
Material	
Bottom	**PC**
Front	**PC**
Top	**PC**
1 core flexible	**0,25 - 2,50 mm², 24 - 12 AWG**
2 core with the same cross section, flexible without crimp connectors or with TWIN crimp connectors	**0,20 - 1,50 mm², 24 - 16 AWG**
Torque setting with screw terminals	**0,50 Nm**
Connection type	**Spring-loaded terminal, screw terminal**
Conductor cross section with spring-loaded terminals: Flexible with/without crimp connector	**0,20 - 2,50 mm², 24 - 12 AWG**
Spring-loaded terminals: Terminal points per connection	**2**
Stripping length with spring-loaded terminals	**9,0 mm**
Dimensions	
Height	**100,0 mm**
Width	**45,0 mm**
Depth	**120,0 mm**
Weight	**230 g**

Where standards are undated, the 2012-07 latest editions shall apply.

Base units
PNOZ mm0p-T

Safety characteristic data

Unit	Operating mode	EN ISO 13849-1: 2015 PL	EN ISO 13849-1: 2015 Category	EN 62061 SIL CL	EN 62061 PFH_D [1/h]	EN ISO 13849-1: 2015 T_M [year]
Logic						
CPU	**2-channel**	**PL e**	**Cat. 4**	**SIL CL 3**	**1,54E-09**	**20**
Input						
SC inputs	**1-channel**	**PL d**	**Cat. 2**	**SIL CL 2**	**3,95E-09**	**20**
SC inputs	**2-channel**	**PL e**	**Cat. 4**	**SIL CL 3**	**4,61E-10**	**20**
SC inputs	**1-ch., pulsed light barrier**	**PL e**	**Cat. 4**	**SIL CL 3**	**3,95E-10**	**20**
Output						
SC outputs	**1-channel with advanced fault detection**	**PL e**	**Cat. 4**	**SIL CL 3**	**7,65E-10**	**20**
SC outputs	**1-channel**	**PL d**	**Cat. 2**	**SIL CL 2**	**8,90E-10**	**20**
SC outputs	**2-channel**	**PL e**	**Cat. 4**	**SIL CL 3**	**7,86E-10**	**20**

Explanatory notes for the safety-related characteristic data:

- The SIL CL value in accordance with EN 62061 corresponds to the SIL value in accordance with EN 61508.
- T_M is the maximum mission time in accordance with EN ISO 13849-1. The value also applies as the retest interval in accordance with EN 61508-6 and IEC 61511 and as the proof test interval and mission time in accordance with EN 62061.

All the units used within a safety function must be considered when calculating the safety characteristic data.

Base units
PNOZ mm0p-T

Supplementary data

Maximum capacitive load C (µF) with load current I (A) at the semiconductor outputs

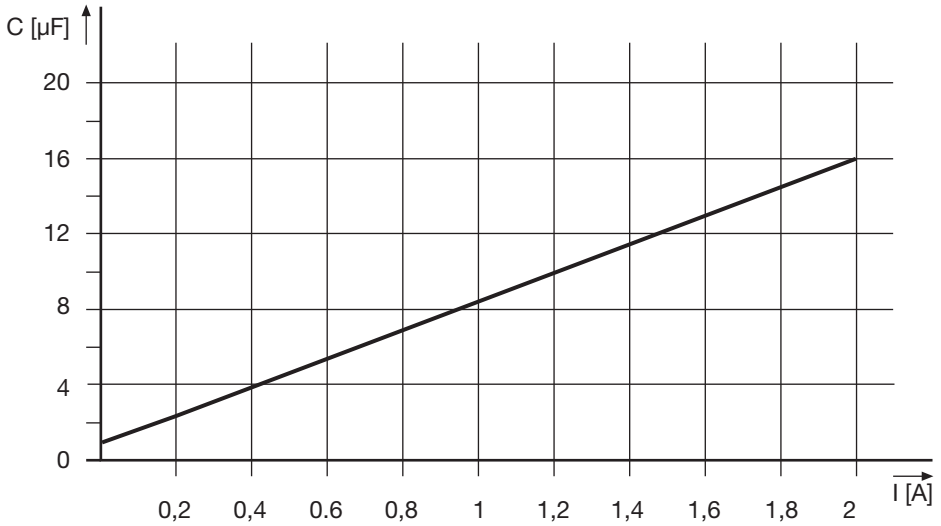

Maximum permitted total current of the semiconductor outputs

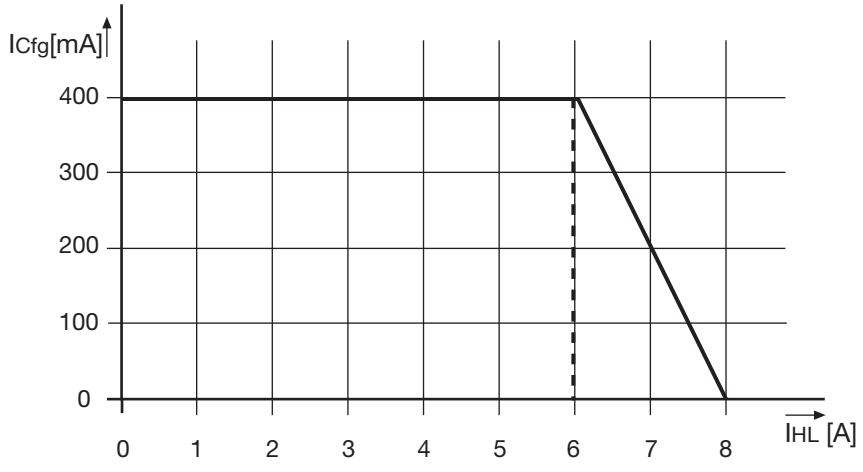

I_{Cfg}: Total current of the configurable semiconductor outputs (auxiliary outputs)

I_{HL}: Total current: Semiconductor outputs (safety outputs)

Base units
PNOZ mm0p-T

Order reference

Order reference		

Product type	Features	Order no.
PNOZ mm0p-T	Base unit	772 010

Terminals

Product type	Features	Order no.
PNOZ s Set1 spring loaded terminals	1 set of spring-loaded terminals	751 008
PNOZ s Set1 screw terminals	1 set of screw terminals	750 008

Cable

Product type	Features	Order no.
PSSu A USB-CAB03	Mini USB cable, 3 m	312 992
PSSu A USB-CAB05	Mini USB cable, 5 m	312 993

Base units
PNOZ mm0.1p



Overview

Unit features

Application of the product PNOZ mm0.1p:

PNOZmulti Mini base unit

The product has the following features:

- Can be configured in the PNOZmulti Configurator
- Semiconductor outputs:

  4 safety outputs
  Depending on the application, up to PL e of EN ISO 13849-1 and up to SIL CL 3 of EN IEC 62061
- 12 inputs for connecting, for example:
  - E-STOP pushbuttons
  - Two-hand button
  - Safety gate limit switches
  - Start buttons
  - Light beam devices
  - Scanners
  - Enabling switches
  - PSEN
  - Operating mode selector switches
  - Safety mats
- 8 configurable inputs/outputs

  Can be configured as:
  - Inputs (see above for connection options)

  or
  - Outputs for standard applications

Base units
PNOZ mm0.1p

- 4 configurable outputs
  Can be configured as:
  – Outputs for standard applications
  or
  – Test pulse outputs
- LED indicator for:
  – Error messages
  – Diagnostics
  – Supply voltage
  – Output circuits
  – Input circuits
- Display for:
  – Error messages
  – State of supply voltage
  – State of the inputs and outputs
  – Status information
  – Unit information
- Test pulse outputs used to monitor shorts across the inputs
- Monitoring of shorts between the safety outputs
- Plug-in connection terminals:
  Either spring-loaded terminal or screw terminal available as an accessory (see order reference)
- Rotary knob for menu control
- Expansion modules can be connected
  (please refer to the document "PNOZmulti System Expansion" for details of the type and number that can be connected)

Chip card

To be able to use the product you will need a chip card.

Chip cards are available with memories of 8 kByte and 32 kByte. For large-scale projects we recommend the 32 kByte chip card (see Technical Catalogue: Accessories chapter).

Base units
PNOZ mm0.1p

Front view

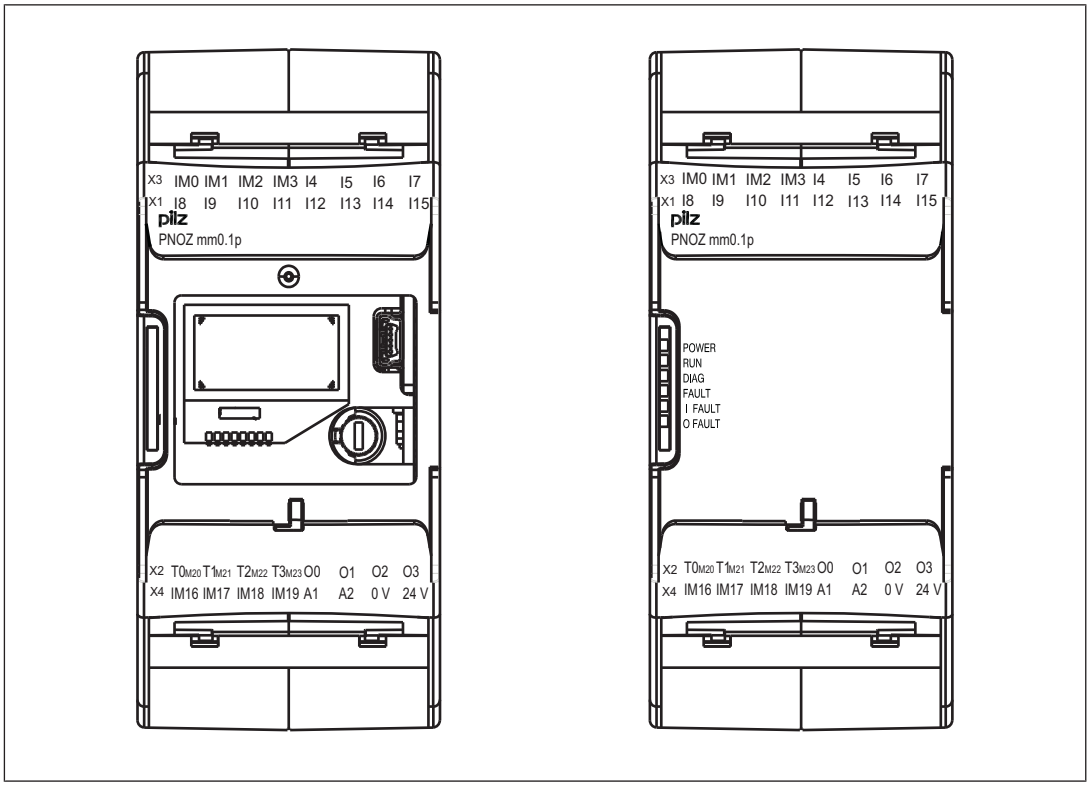

Front view with and without cover

Legend

X1:	Inputs I8 ... I15
X2:	Configurable test pulse/auxiliary outputs T0M20 ... T3M23
	Semiconductor outputs O0 ... O3
X3:	Configurable inputs/outputs IM0 – IM3
	Inputs I4 ... I7
X4:	Configurable inputs/outputs IM16 – IM19
	Supply connections
LEDs:	PWR
	RUN
	DIAG
	FAULT
	I FAULT
	O FAULT

Base units
PNOZ mm0.1p

Function description

Functions

The function of the inputs and outputs on the control system depends on the safety circuit created using the PNOZmulti Configurator. A chip card is used to download the safety circuit to the base unit. The base unit has 2 microcontrollers that monitor each other. They evaluate the input circuits on the base unit and expansion modules and switch the outputs on the base unit and expansion modules accordingly.

The LEDs on the base unit and expansion modules indicate the status of the configurable control system PNOZmulti.

The online help on the PNOZmulti Configurator contains descriptions of the operating modes and all the functions of the control system, plus connection examples.

System reaction time

Calculation of the maximum reaction time between an input switching off and a linked output in the system switching off is described in the document "PNOZmulti System Expansion [30]".

Block diagram

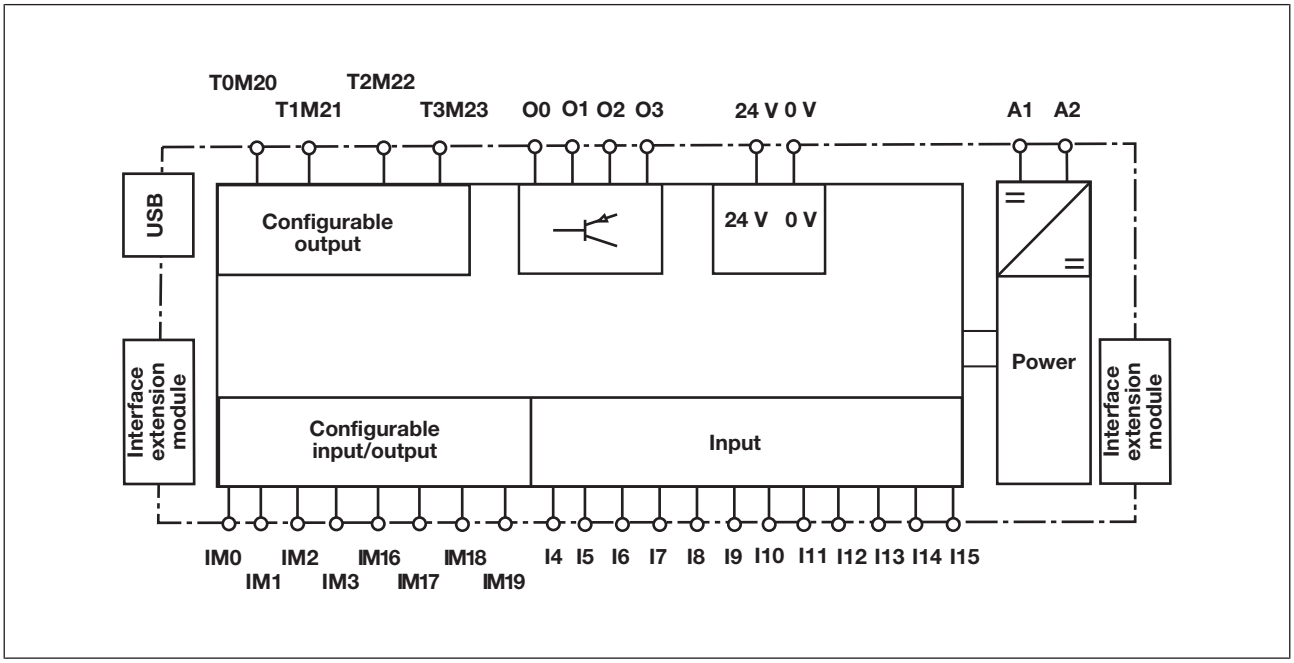

Base units
PNOZ mm0.1p

Installation

Dimensions

*with spring-loaded terminals

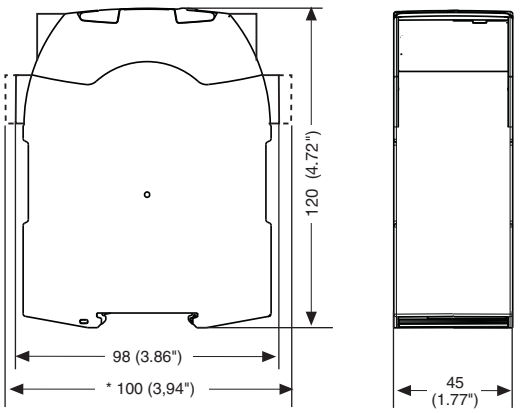

Commissioning

General wiring guidelines

The wiring is defined in the circuit diagram in the Configurator. There you can select the inputs that are to perform a safety function and the outputs that are to switch this safety function.

Please note:

- Information given in the Technical details [549] must be followed.
- Outputs O0 to O3 are semiconductor outputs
- Use copper wiring with a temperature stability of 75 °C.
- Adequate protection must be provided on all output contacts with inductive loads.
- The safety system and input circuits must always be supplied by a single power supply. The power supply must meet the regulations for extra low voltages with protective separation.
- Test pulse outputs must exclusively be used to test the inputs. They must not be used to drive loads.
  Do not route the test pulse lines together with actuator cables within an unprotected multicore cable.
- Test pulse outputs are also used to supply safety mats that trigger a short circuit.
  Test pulses that are used for the safety mat may not be reused for other purposes.

Base units
PNOZ mm0.1p

Preparing for operation

Function test during commissioning

Using the chip card

Make sure that you do not bend the chip card as you insert it into the chip card slot.

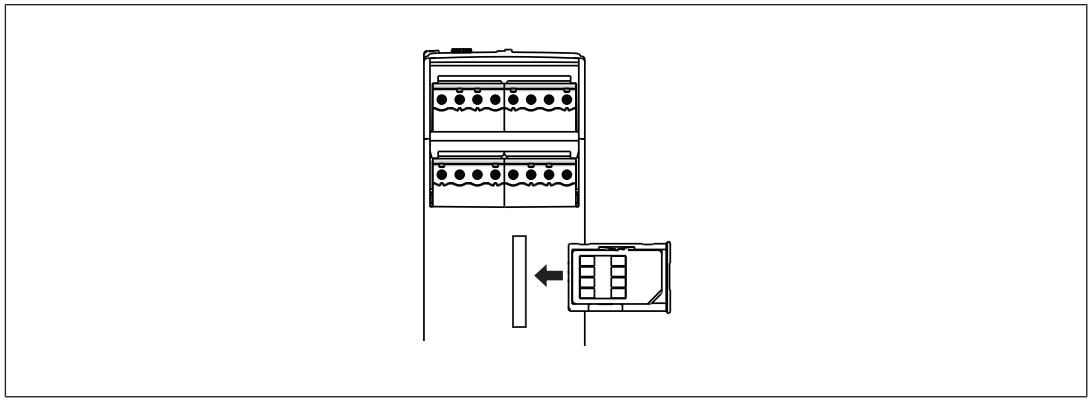

Commissioning the PNOZmulti safety system

Procedure:

- Wire the inputs and outputs on the base unit in accordance with the circuit diagram.
- Connect the supply voltage:
  - Supply voltage for the control system:
  - Terminal A1: + 24 VDC
  - Terminal A2: 0 V
  - Supply voltage for the semiconductor outputs:
  - 24 V terminal: + 24 VDC
  - 0V terminal: 0 V

Please note: The supply voltage for the semiconductor outputs must always be present, even if you are not using the semiconductor outputs.

Load project from chip card

Procedure:

- Insert the chip card containing the current project into the card slot on the base unit.
- Switch on the supply voltage. The LC display shows the project name, CRC sum and the date the project was created. Please check this information.
- Load the project by pressing the rotary knob. For the project to be downloaded, the rotary knob must be held down for between 3 and 8 seconds. Once the project has been successfully downloaded, the status of the inputs and outputs will be shown on the display.

Base units
PNOZ mm0.1p

Load project via USB port

Procedure:

- Insert a chip card into the card slot on the base unit.
- Connect the computer containing the PNOZmulti Configurator to the base unit via the USB port.
- Switch on the supply voltage.
- Download the project (see PNOZmulti Configurator's online help).
- Once the project has been successfully downloaded, the status of the inputs and outputs and the supply voltage will be shown on the display. The "RUN" LED will be lit.

Connection

Supply voltage	AC	DC
For the safety system	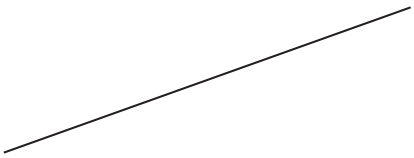	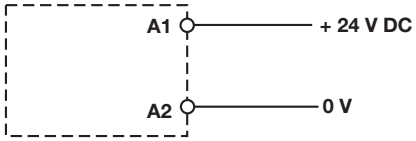
For the semiconductor outputs Must always be present, even if the semiconductor outputs are not used	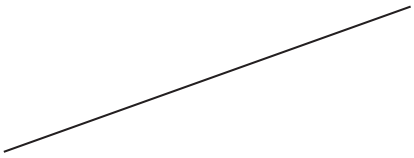	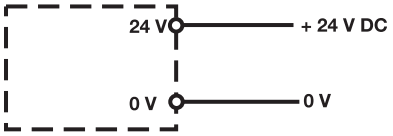

Input circuit	Single-channel	Dual-channel
E-STOP **without** detection of shorts across contacts	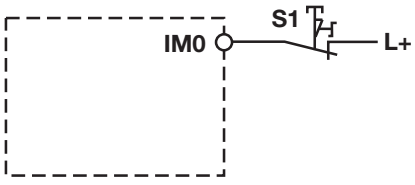	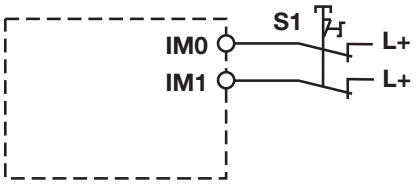
E-STOP **with** detection of shorts across contacts	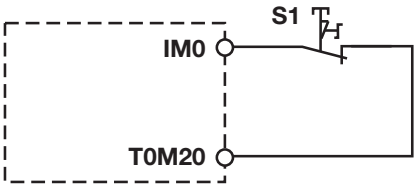	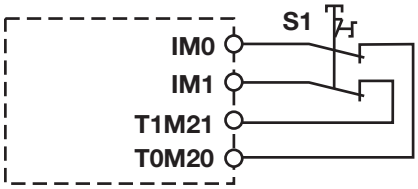

Base units
PNOZ mm0.1p

Start circuit	Input circuit without detection of shorts across contacts	Input circuit with detection of shorts across contacts
	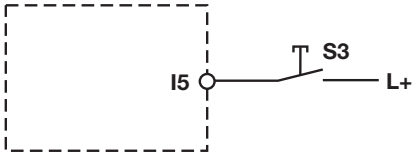	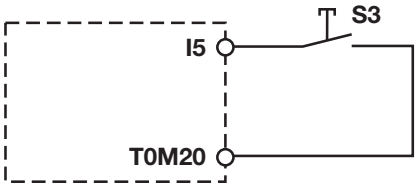
Redundant output	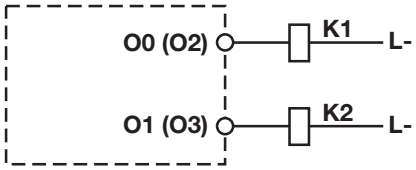	
Single output	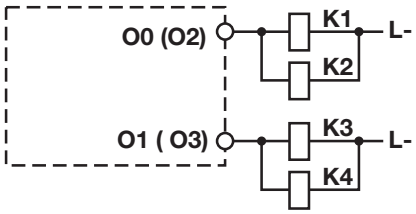	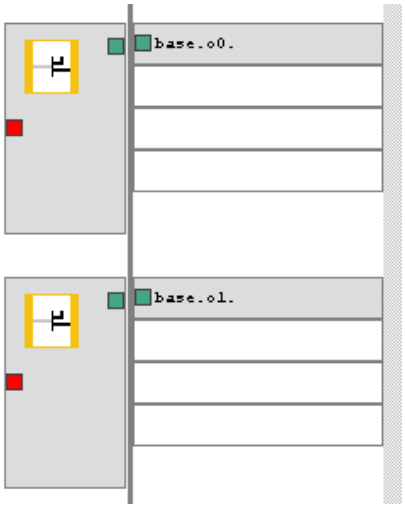
Single output with advanced fault detection*	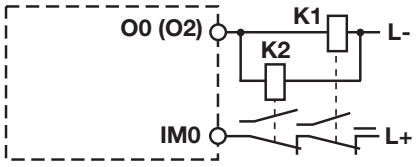	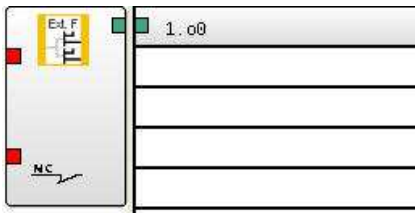

*Two loads may be connected to each safety output with advanced fault detection, even on applications in accordance with EN IEC 62061, SIL CL 3. Prerequisite: Feedback loop is connected, shorts across contacts and external power sources are excluded (e.g. through separate multicore cables). Please note that, in the event of an error in the feedback loop, the safety system switches to a safe condition and shuts down **all** the outputs.

Base units
PNOZ mm0.1p

Feedback loop	Redundant output	
Contacts from external contactors	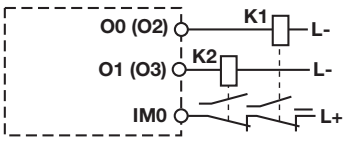	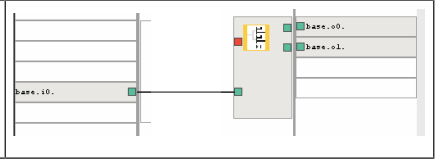

Connection example

Dual-channel E-STOP and safety gate wiring, monitored start (IM18), feedback loop (IM16)

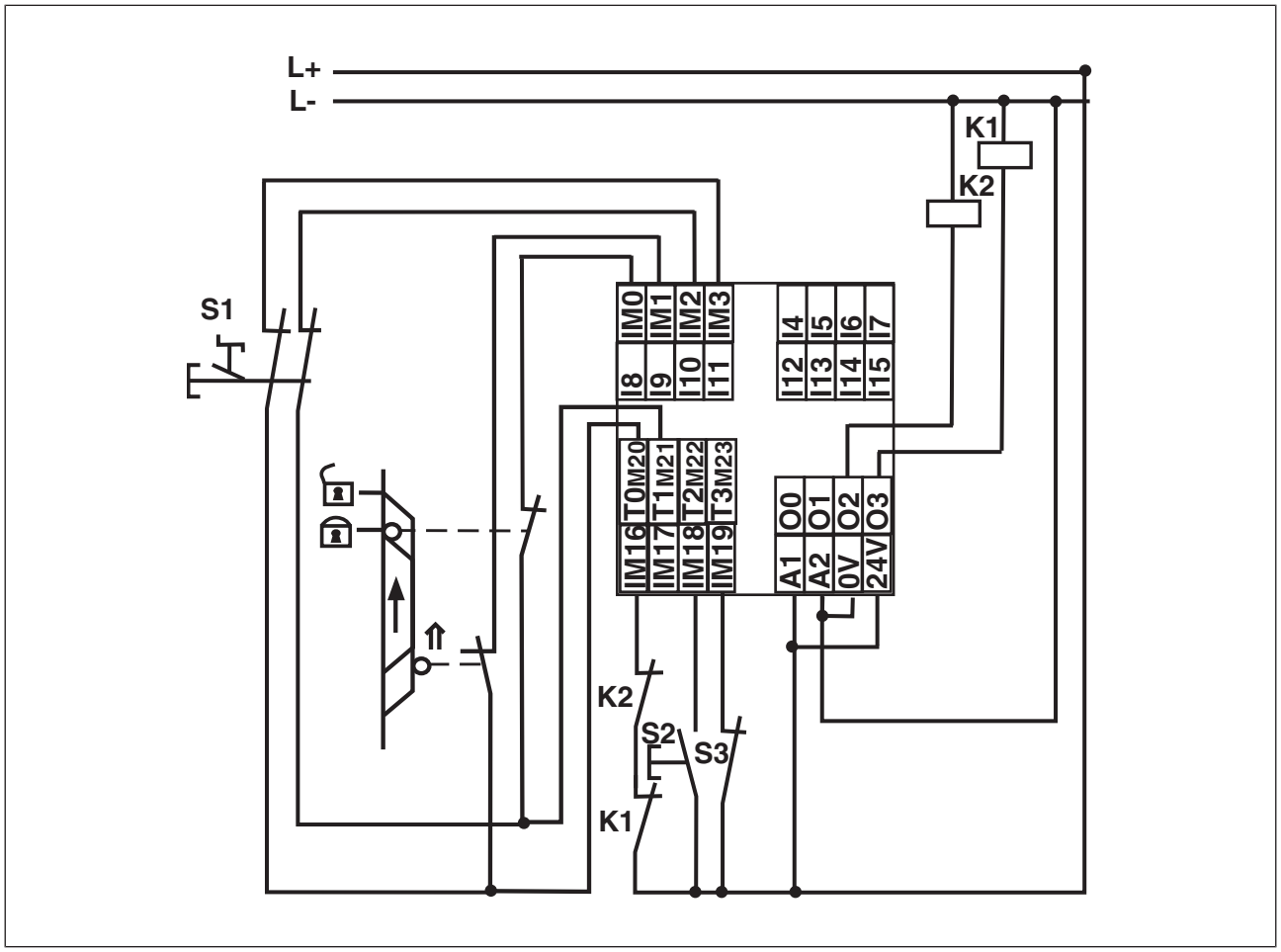

Base units
PNOZ mm0.1p

Technical details

General	
Certifications	**BG, CCC, CE, EAC (Eurasian), KCC, TÜV, cULus Listed**
Electrical data	
Supply voltage	
for	**Supply to the system**
Voltage	**24,0 V**
Kind	**DC**
Voltage tolerance	**-15 %/+20 %**
Output of external power supply (DC)	**35,0 W**
Output of external power supply (DC) at no load	**8,0 W**
Residual ripple DC	**5 %**
Supply voltage	
for	**Supply to the SC outputs**
Voltage	**24 V**
Kind	**DC**
Voltage tolerance	**-15 %/+20 %**
Output of external power supply (DC)	**192,0 W**
Status indicator	**Display, LED**
Configurable inputs/outputs (inputs or auxiliary outputs)	
Number	**8**
Galvanic isolation	**No**
Configurable inputs	
Input voltage in accordance with EN 61131-2 Type 1	**24,0 V**
Input current at rated voltage	**5 mA**
Min. pulse duration	**16 ms**
Pulse suppression	**0,6 ms**
Signal level at "1"	**15 ... 30 V DC**
Signal level at "0"	**-3 ... +5 V DC**
Maximum input delay	**4,0 ms**
Configurable auxiliary outputs	
Voltage	**24,0 V**
Output current	**75 mA**
Power	**1,8 W**
Short circuit-proof	**yes**
Residual current at "0"	**0,5 mA**
Voltage at "1"	**UB - 2 V at 0.1 A**

Base units
PNOZ mm0.1p

Inputs	
Number	**12**
Signal level at "0"	**-3 - +5 V DC**
Signal level at "1"	**15 - 30 V DC**
Input voltage in accordance with EN 61131-2 Type 1	**24 V DC**
Input current at rated voltage	**5 mA**
Min. pulse duration	**16 ms**
Pulse suppression	**0,6 ms**
Maximum input delay	**4 ms**
Potential isolation	**No**
Semiconductor outputs	
Number	**4**
Switching capability	
Voltage	**24 V**
Current	**2,0 A**
Power	**48 W**
Signal level at "1"	**UB - 0.5 VDC at 2 A**
Residual current at "0"	**0,5 mA**
Max. capacitive load	**1 µF**
Max. duration of off time during self test	**330 µs**
Switch-off delay	**30 ms**
Potential isolation	**yes**
Short circuit-proof	**yes**
Test pulse outputs	
Number of test pulse outputs	**4**
Voltage	**24 V**
Current	**0,1 A**
Max. duration of off time during self test	**5 ms**
Short circuit-proof	**yes**
Potential isolation	**No**
Times	
Switch-on delay	**5,00 s**
Supply interruption before de-energisation	**20 ms**
Simultaneity, channel 1 and 2 max.	**3 s**
Simultaneity in the two-hand circuit	**0,5 s**
Environmental data	
Ambient temperature	
In accordance with the standard	**EN 60068-2-14**
Temperature range	**0 - 60 °C**
Forced convection in control cabinet off	**55 °C**

Base units
PNOZ mm0.1p

Environmental data	
Storage temperature	
In accordance with the standard	**EN 60068-2-1/-2**
Temperature range	**-25 - 70 °C**
Climatic suitability	
In accordance with the standard	**EN 60068-2-30, EN 60068-2-78**
Humidity	**93 % r. h. at 40 °C**
Condensation during operation	**Not permitted**
EMC	**EN 61131-2**
Vibration	
In accordance with the standard	**EN 60068-2-6**
Frequency	**10,0 - 150,0 Hz**
Acceleration	**1g**
Shock stress	
In accordance with the standard	**EN 60068-2-27**
Acceleration	**15g**
Duration	**11 ms**
Max. operating height above sea level	**2000 m**
Airgap creepage	
In accordance with the standard	**EN 61131-2**
Overvoltage category	**II**
Pollution degree	**2**
Rated insulation voltage	**30 V**
Rated impulse withstand voltage	**2,50 kV**
Protection type	
In accordance with the standard	**EN 60529**
Mounting area (e.g. control cabinet)	**IP54**
Housing	**IP20**
Terminals	**IP20**
Potential isolation	
Potential isolation between	**SC output and system voltage**
Type of potential isolation	**Basic insulation**
Rated surge voltage	**2500 V**
Mechanical data	
Mounting position	**horizontally on mounting rail**
DIN rail	
Top hat rail	**35 x 7,5 EN 50022**
Recess width	**27 mm**
Max. cable length	
Max. cable length per input	**1,0 km**
Sum of individual cable lengths at the test pulse output	**2 km**

Base units
PNOZ mm0.1p

Mechanical data	
Material	
Bottom	**PC**
Front	**PC**
Top	**PC**
Connection type	**Spring-loaded terminal, screw terminal**
Conductor cross section with screw terminals	
1 core flexible	**0,25 - 2,50 mm², 24 - 12 AWG**
2 core with the same cross section, flexible without crimp connectors or with TWIN crimp connectors	**0,20 - 1,50 mm², 24 - 16 AWG**
Torque setting with screw terminals	**0,50 Nm**
Conductor cross section with spring-loaded terminals: Flexible with/without crimp connector	**0,20 - 2,50 mm², 24 - 12 AWG**
Spring-loaded terminals: Terminal points per connection	**2**
Stripping length with spring-loaded terminals	**9 mm**
Dimensions	
Height	**100,0 mm**
Width	**45,0 mm**
Depth	**120,0 mm**
Weight	**231 g**

Where standards are undated, the 2010-08 latest editions shall apply.

Safety characteristic data

Unit	Operating mode	EN ISO 13849-1: 2015 PL	EN ISO 13849-1: 2015 Category	EN 62061 SIL CL	EN 62061 PFH_D [1/h]	EN ISO 13849-1: 2015 T_M [year]
Logic						
CPU	**2-channel**	**PL e**	**Cat. 4**	**SIL CL 3**	**1,54E-09**	**20**
Expansion right	–	**PL e**	**Cat. 4**	**SIL CL 3**	**2,13E-10**	**20**
Expansion left	–	**PL e**	**Cat. 4**	**SIL CL 3**	**2,38E-10**	**20**
Input						
SC inputs	**1-channel**	**PL d**	**Cat. 2**	**SIL CL 2**	**3,95E-09**	**20**
SC inputs	**2-channel**	**PL e**	**Cat. 4**	**SIL CL 3**	**4,61E-10**	**20**
SC inputs	**Short circuit-forming safety mats**	**PL d**	**Cat. 3**	**SIL CL 2**	**1,86E-09**	**20**

Base units
PNOZ mm0.1p

Input						
SC inputs	**1-ch., pulsed light barrier**	**PL e**	**Cat. 4**	**SIL CL 3**	**3,95E-10**	**20**
Output						
SC outputs	**1-channel with advanced fault detection**	**PL e**	**Cat. 4**	**SIL CL 3**	**7,65E-10**	**20**
SC outputs	**1-channel**	**PL d**	**Cat. 2**	**SIL CL 2**	**8,90E-10**	**20**
SC outputs	**2-channel**	**PL e**	**Cat. 4**	**SIL CL 3**	**7,86E-10**	**20**

Explanatory notes for the safety-related characteristic data:

- The SIL CL value in accordance with EN 62061 corresponds to the SIL value in accordance with EN 61508.
- T_M is the maximum mission time in accordance with EN ISO 13849-1. The value also applies as the retest interval in accordance with EN 61508-6 and IEC 61511 and as the proof test interval and mission time in accordance with EN 62061.

All the units used within a safety function must be considered when calculating the safety characteristic data.

Supplementary data

Maximum capacitive load C (µF) with load current I (A) at the semiconductor outputs

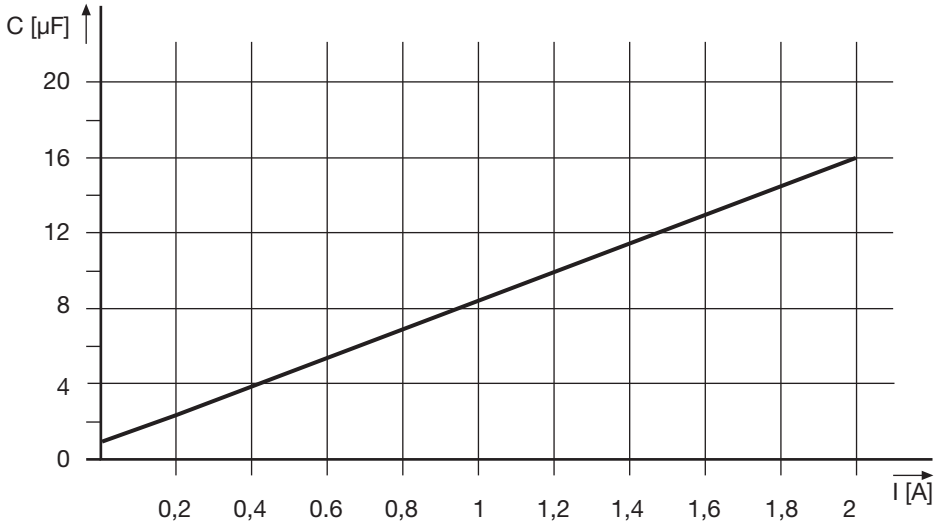

Base units
PNOZ mm0.1p

Maximum permitted total current of the semiconductor outputs

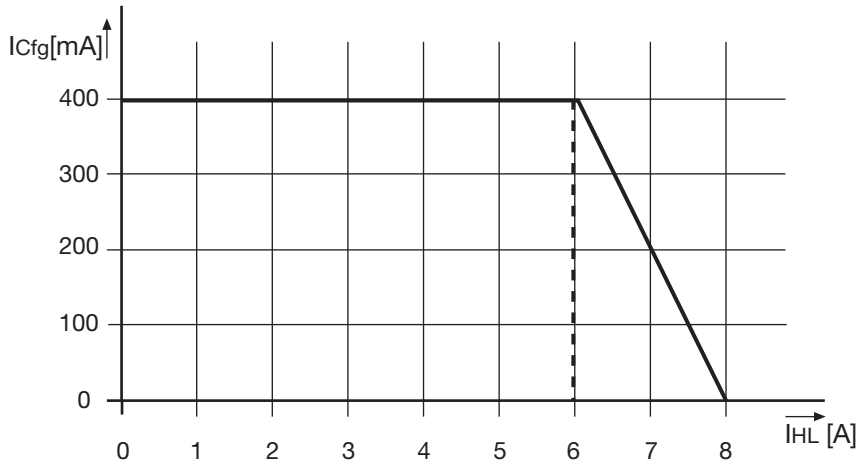

I_{Cfg}: Total current of the configurable semiconductor outputs (auxiliary outputs)

I_{HL}: Total current: Semiconductor outputs (safety outputs)

Order reference

Product

Product type	Features	Order No.
PNOZ mm0.1p	Base unit	772 001

Accessories

Terminator

Product type	Features	Order No.
PNOZ s terminator plug	Right terminator, yellow, x10	750 010
PNOZ mm0.xp terminator left	Left terminator, black/yellow, x1	779 261

Cable

Product type	Features	Order no.
PSSu A USB-CAB03	Mini USB cable, 3 m	312 992
PSSu A USB-CAB05	Mini USB cable, 5 m	312 993

Base units
PNOZ mm0.1p

Terminals

Product type	Features	Order no.
PNOZ s Set1 spring loaded terminals	1 set of spring-loaded terminals	751 008
PNOZ s Set1 screw terminals	1 set of screw terminals	750 008

Base units
PNOZ mm0.2p



Overview

Unit features

Application of the product PNOZ mm0.2p:

PNOZmulti Mini base unit

The product has the following features:

- Can be configured in the PNOZmulti Configurator
- Semiconductor outputs:

  4 safety outputs
  Depending on the application, up to PL e of EN ISO 13849-1 and up to SIL CL 3 of EN IEC 62061
- 12 inputs for connecting, for example:
  - E-STOP pushbuttons
  - Two-hand button
  - Safety gate limit switches
  - Start buttons
  - Light beam devices
  - Scanners
  - Enabling switches
  - PSEN
  - Operating mode selector switches
  - Safety mats
- 8 configurable inputs/outputs

  Can be configured as:
  - Inputs (see above for connection options)

  or
  - Outputs for standard applications

Base units
PNOZ mm0.2p

- 4 configurable outputs
  Can be configured as:
  – Outputs for standard applications
  or
  – Test pulse outputs
- LED indicator for:
  – Error messages
  – Diagnostics
  – Supply voltage
  – Output circuits
  – Input circuits
- Display for:
  – Error messages
  – State of supply voltage
  – State of the inputs and outputs
  – Status information
  – Unit information
- Test pulse outputs used to monitor shorts across the inputs
- Monitoring of shorts between the safety outputs
- Plug-in connection terminals:
  Either spring-loaded terminal or screw terminal available as an accessory (see order reference)
- Rotary knob for menu control
- Expansion modules can be connected
  (please refer to the document "PNOZmulti System Expansion" for details of the type and number that can be connected)
- Integrated interface (RJ45 socket) for safe connection of two configurable control systems:
  – Connection options:
    - Two PNOZmulti Mini base units
    or
    - One PNOZmulti Mini base unit with one PNOZmulti base unit
    (both the units to be connected need either an integrated interface or a link module)
  – Point-to-point connection via 4-core shielded, twisted-pair cable
  – 32 virtual inputs and 32 virtual outputs for data transfer

Base units
PNOZ mm0.2p

Chip card

To be able to use the product you will need a chip card.

Chip cards are available with memories of 8 kByte and 32 kByte. For large-scale projects we recommend the 32 kByte chip card (see Technical Catalogue: Accessories chapter).

Front view

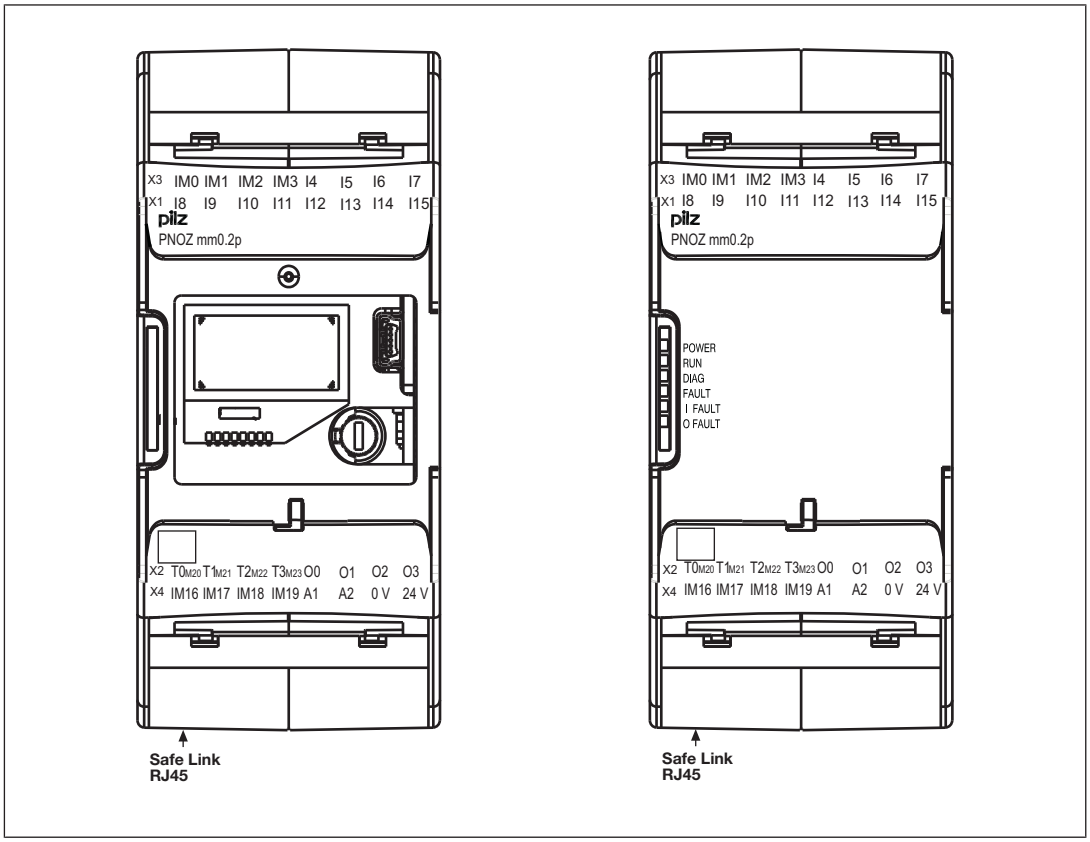

Front view with and without cover

Legend

X1:	Inputs I8 ... I15
X2:	Configurable test pulse/auxiliary outputs T0M20 ... T3M23
	Semiconductor outputs O0 ... O3
X3:	Configurable inputs/outputs IM0 – IM3
	Inputs I4 ... I7
X4:	Configurable inputs/outputs IM16 – IM19
	Supply connections

Base units
PNOZ mm0.2p

LEDs: PWR
RUN
DIAG
FAULT
I FAULT
O FAULT

- Safe Link RJ45
  RJ45 socket for connection of 2 base units

Function description

Functions

The function of the inputs and outputs on the control system depends on the safety circuit created using the PNOZmulti Configurator. A chip card is used to download the safety circuit to the base unit. The base unit has 2 microcontrollers that monitor each other. They evaluate the input circuits on the base unit and expansion modules and switch the outputs on the base unit and expansion modules accordingly.

The LEDs on the base unit and expansion modules indicate the status of the configurable control system PNOZmulti.

The online help on the PNOZmulti Configurator contains descriptions of the operating modes and all the functions of the control system, plus connection examples.

System reaction time

Calculation of the maximum reaction time between an input switching off and a linked output in the system switching off is described in the document "PNOZmulti System Expansion [📖 30]".

Connection of two base units

The integrated interface for connection of 2 base units is used to safely transfer the input information from 32 virtual inputs and 32 virtual outputs between two PNOZmulti systems.

Each base unit needs either an integrated interface or a link module for the connection.

Data exchange:

- Data is exchanged cyclically.
- At the end of the PNOZmulti cycle, each base unit sends its output data to the other base unit or to the link module on the other base unit.
- At the same time the base unit reads the input data from the other base unit.

Base units
PNOZ mm0.2p

Connection of multiple base units:

Any number of base units can be connected via link modules or via the integrated interface. Each base unit needs a link module or an integrated interface for the connection between two base units.
However, only a maximum of 4 link modules may be connected to any one base unit.

Data transmission time:

The t_{BUS} data transmission time is the time between the virtual output at base unit 1 being set and the virtual input at base unit 2 becoming available (see "Technical details").

The maximum reaction time for series connection of n base units

This is the time between the activation of a safety function at the input on one base unit and the switching of an output on the connected base unit.

- The maximum reaction time t_{SUM} includes the following times:

  t_{ON}: Input delay = 4 ms

  t_{COND}: Switch-off delay of semiconductor output = 30 ms

  t_{REL}: Switch-off delay of relay output = 50 ms

  t_{BUS}: Data transmission time between two base units = 35 ms

  n: Number of connections between base units

The maximum reaction time t_{SUM} for series connection of n base units

- On semiconductor outputs:

  $tS_{UM} = t_{ON} + (n * t_{BUS}) + t_{COND}$

- On relay outputs:

  $t_{SUM} = t_{ON} + (n * t_{BUS}) + t_{REL}$

- Input delay and switch-off delay are only included once in the reaction time. The data transmission time is multiplied by the number of connections.
- Please refer to the connection examples under "Preparing for operation".

Virtual inputs and outputs:

Inputs and outputs for both PNOZmulti systems are assigned in the PNOZmulti Configurator. Inputs and outputs with the same number are assigned to each other, e.g. output o5 on one PNOZmulti system to input i5 on the other PNOZmulti system.

Base units
PNOZ mm0.2p

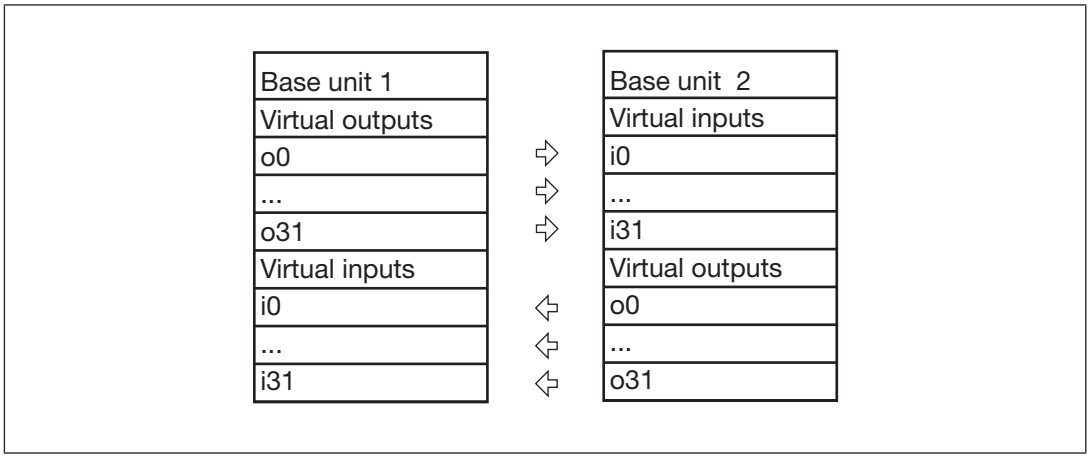

Block diagram

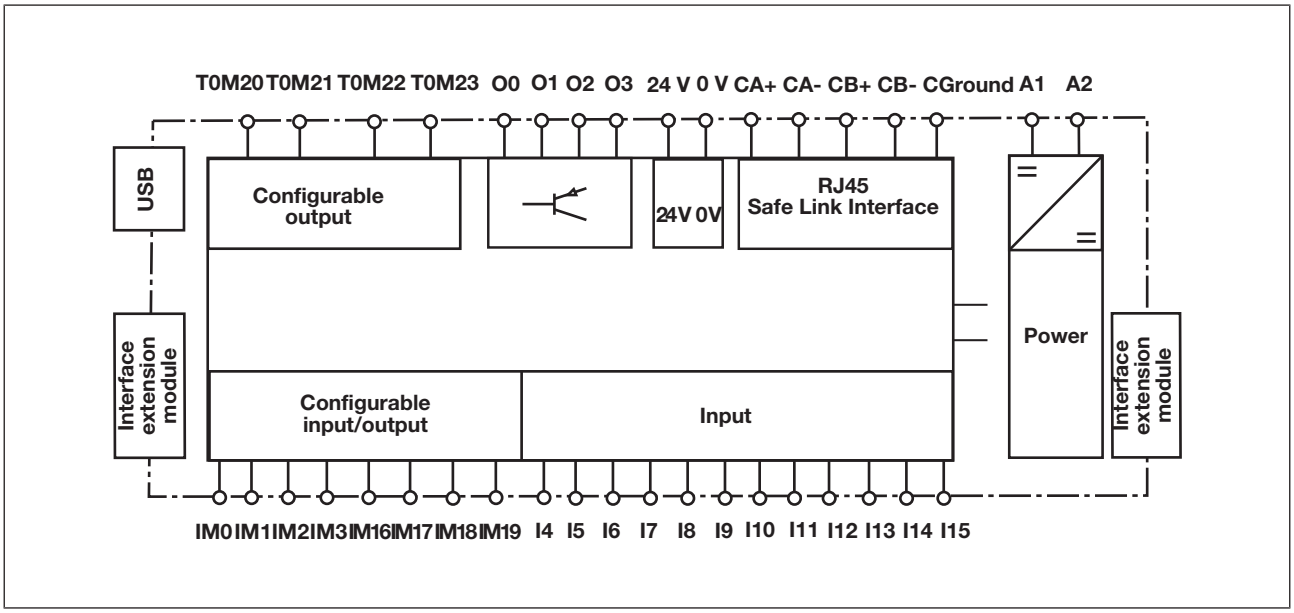

Base units
PNOZ mm0.2p

Installation

Dimensions

*with spring-loaded terminals

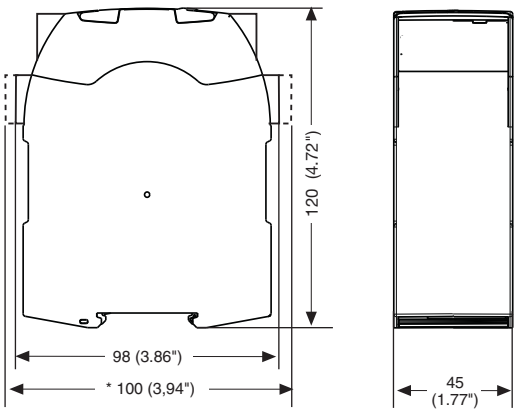

Commissioning

General wiring guidelines

The wiring is defined in the circuit diagram in the Configurator. There you can select the inputs that are to perform a safety function and the outputs that are to switch this safety function.

Please note:

- Information given in the Technical details [570] must be followed.
- Outputs O0 to O3 are semiconductor outputs
- Use copper wiring with a temperature stability of 75 °C.
- Adequate protection must be provided on all output contacts with inductive loads.
- The safety system and input circuits must always be supplied by a single power supply. The power supply must meet the regulations for extra low voltages with protective separation.
- Test pulse outputs must exclusively be used to test the inputs. They must not be used to drive loads.
  Do not route the test pulse lines together with actuator cables within an unprotected multicore cable.
- Test pulse outputs are also used to supply safety mats that trigger a short circuit.
  Test pulses that are used for the safety mat may not be reused for other purposes.

Base units
PNOZ mm0.2p

When connecting two base units via the integrated interface please note:

- The max. cable length between two base units on a connection with
  - one link module PNOZ ml1p <V2.0: 100 m
  - one link module PNOZ ml1p from V2.0, PNOZ mml1p or one base unit PNOZ mm0.2p: 1000 m
- Connect the inputs and outputs via the two interfaces using 4-core shielded cable. The cables must be twisted in pairs (see "Preparing for operation").
- Note the crossover cabling, e.g. CA+ with CB+.
- The cables must be classified into a minimum of Category 5 in accordance with ISO/IEC 11801.

Preparing for operation

Function test during commissioning

Using the chip card

Make sure that you do not bend the chip card as you insert it into the chip card slot.

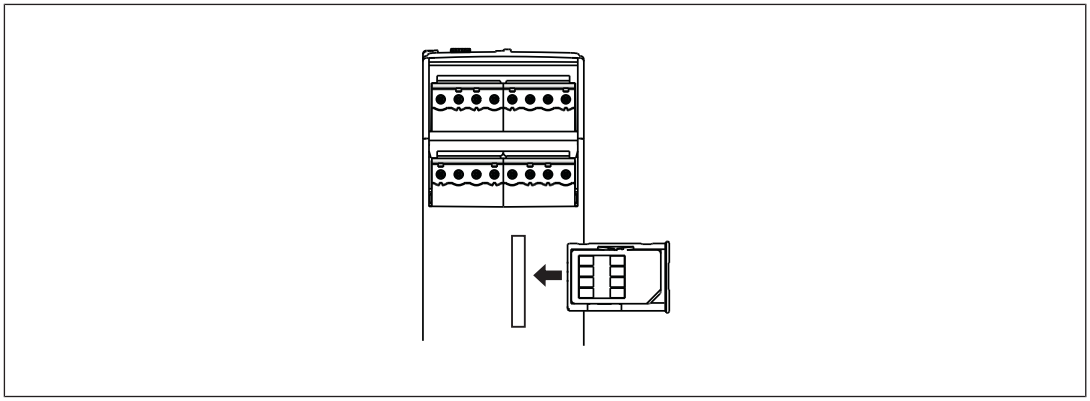

Commissioning the PNOZmulti safety system

Procedure:

- Wire the inputs and outputs on the base unit in accordance with the circuit diagram.
- Connect the supply voltage:
  - Supply voltage for the control system:
  - Terminal A1: + 24 VDC
  - Terminal A2: 0 V
  - Supply voltage for the semiconductor outputs:
  - 24 V terminal: + 24 VDC
  - 0V terminal: 0 V

Base units
PNOZ mm0.2p

Please note: The supply voltage for the semiconductor outputs must always be present, even if you are not using the semiconductor outputs.

Load project from chip card

Procedure:

- Insert the chip card containing the current project into the card slot on the base unit.
- Switch on the supply voltage. The LC display shows the project name, CRC sum and the date the project was created. Please check this information.
- Load the project by pressing the rotary knob. For the project to be downloaded, the rotary knob must be held down for between 3 and 8 seconds. Once the project has been successfully downloaded, the status of the inputs and outputs will be shown on the display.

Load project via USB port

Procedure:

- Insert a chip card into the card slot on the base unit.
- Connect the computer containing the PNOZmulti Configurator to the base unit via the USB port.
- Switch on the supply voltage.
- Download the project (see PNOZmulti Configurator's online help).
- Once the project has been successfully downloaded, the status of the inputs and outputs and the supply voltage will be shown on the display. The "RUN" LED will be lit.

Connection

Supply voltage	AC	DC
For the safety system	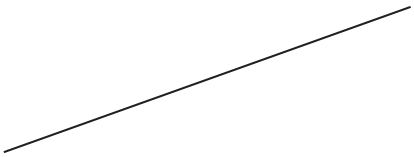	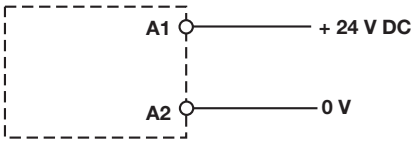
For the semiconductor outputs Must always be present, even if the semiconductor outputs are not used	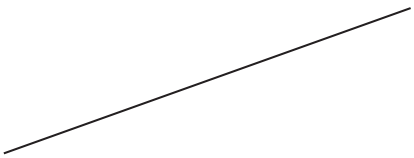	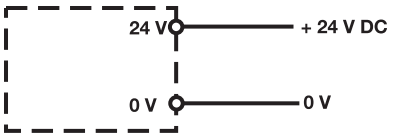

Base units
PNOZ mm0.2p

Input circuit	Single-channel	Dual-channel
E-STOP **without** detection of shorts across contacts	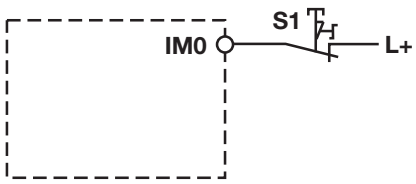	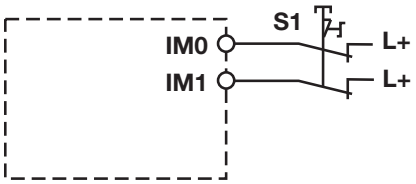
E-STOP **with** detection of shorts across contacts	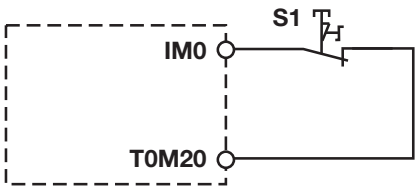	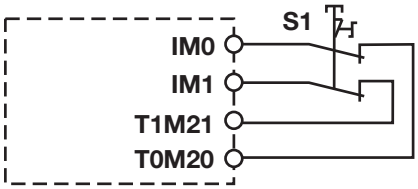

Start circuit	Input circuit without detection of shorts across contacts	Input circuit with detection of shorts across contacts
	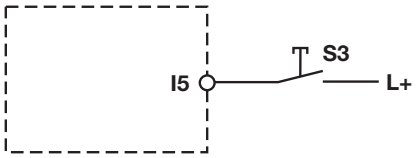	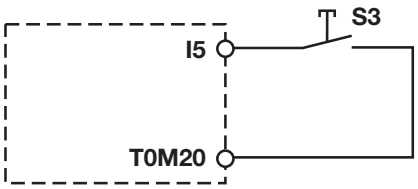
Redundant output	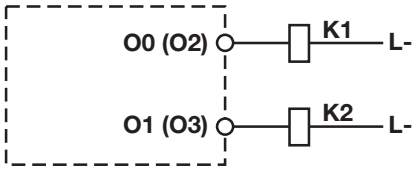	
Single output	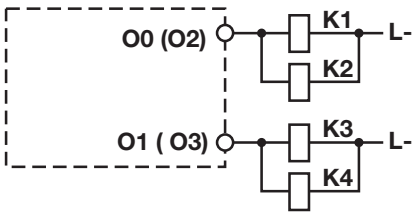	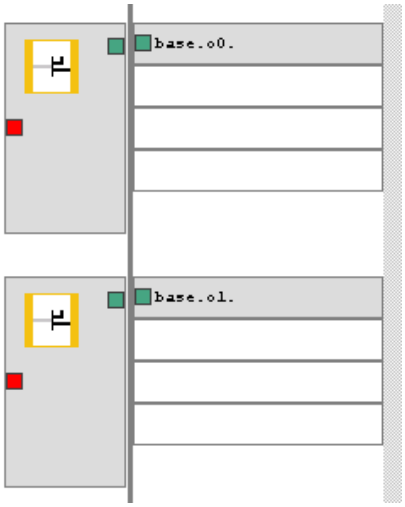

Base units
PNOZ mm0.2p

Single output with advanced fault detection*	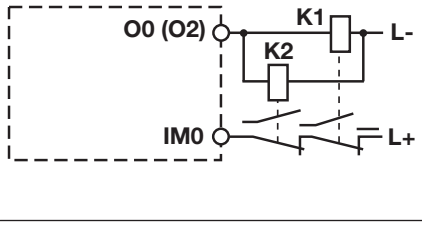	

*Two loads may be connected to each safety output with advanced fault detection, even on applications in accordance with EN IEC 62061, SIL CL 3. Prerequisite: Feedback loop is connected, shorts across contacts and external power sources are excluded (e.g. through separate multicore cables). Please note that, in the event of an error in the feedback loop, the safety system switches to a safe condition and shuts down **all** the outputs.

Feedback loop	Redundant output	
Contacts from external contactors	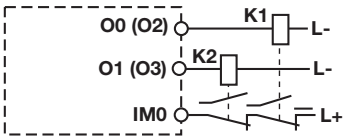	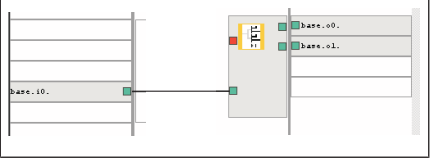

Connection of two base units

Interface assignment

RJ45 socket 8-pin	PIN	Layout
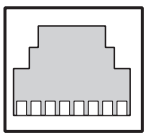	1	CA+
	2	CA-
	3	CB+
	4	n.c.
	5	n.c.
	6	CB-
	7	n.c.
	8	n.c.
	Shield	CGround

Base units
PNOZ mm0.2p

Connection

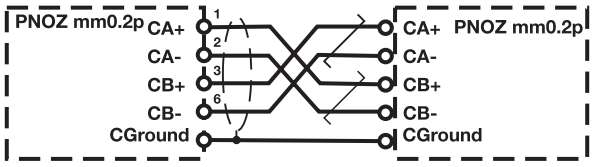

Connection of two base units PNOZmulti Mini via the integrated interface

Connection examples

Dual-channel E-STOP and safety gate wiring, monitored start (IM18), feedback loop (IM16)

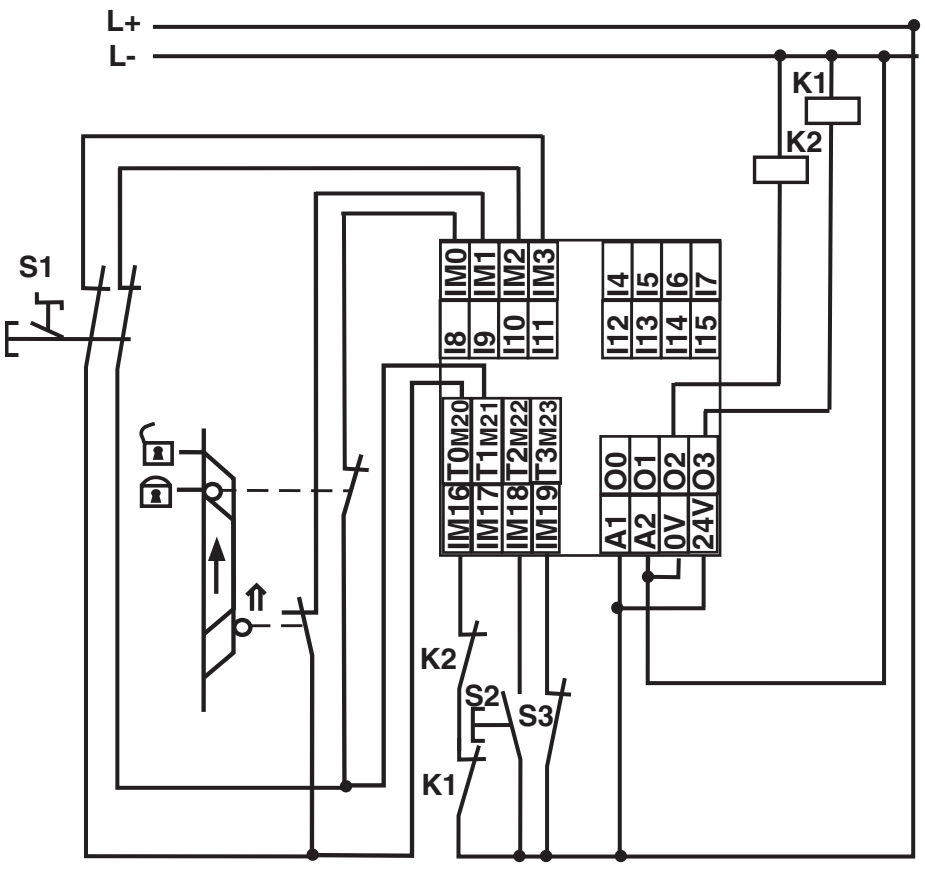

Base units
PNOZ mm0.2p

Connection of multiple base units via the integrated interface

Example 1: Series connection of 3 base units

Reaction time t_{SUM} between base unit Base 1 and Base 2:
Input delay t_{ON} at I4 and I6 + data transmission time1 * t_{BUS} through link module/interface + switch-off delay t_{COND} of the semiconductor output at O0
$t_{SUM} = t_{ON} + (n * t_{BUS}) + t_{COND}$
t_{SUM} = 4 ms + (1 * 35 ms) + 30 ms = 69 ms
Reaction time t_{SUM} between base unit Base 1 and Base 3:
Input delay t_{ON} at I4 und I6 + data transmission time 2 * t_{BUS} through link modules/interfaces + switch-off delay t_{COND} of the semiconductor output at O1
$t_{SUM} = t_{ON} + (n * t_{BUS}) + t_{COND}$
t_{SUM} = 4 ms + (2 * 35 ms) + 30 ms = 104 ms

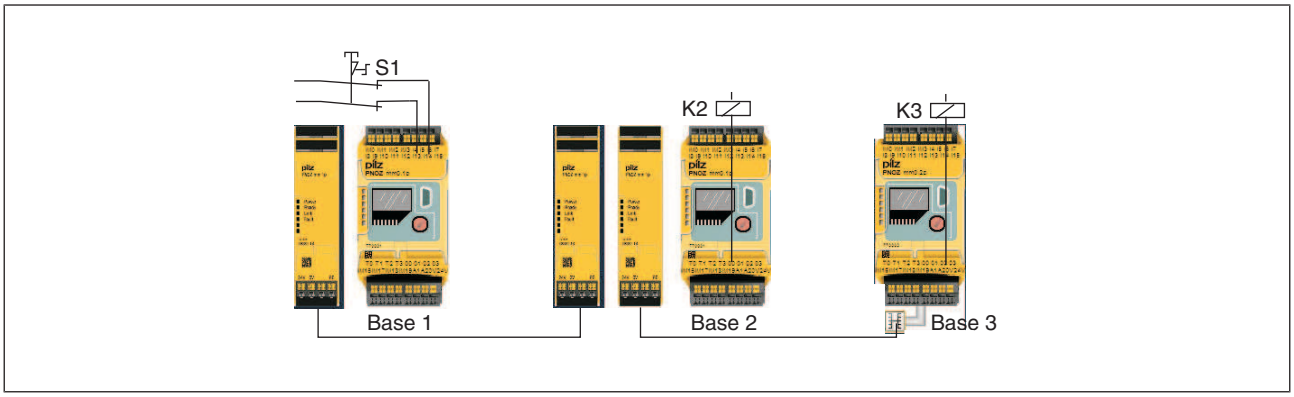

Example 2: Connection of 5 base units

The reaction times are calculated in the same way as application example 1. After pressing S1 on Base 1, the semiconductor outputs switch after the following reaction times t_{SUM}:
O0 on Base 2: 69 ms
O1 on Base 3: 104 ms
O0 on Base 4: 139 ms
O0 on Base 5: 104 ms

Base units
PNOZ mm0.2p

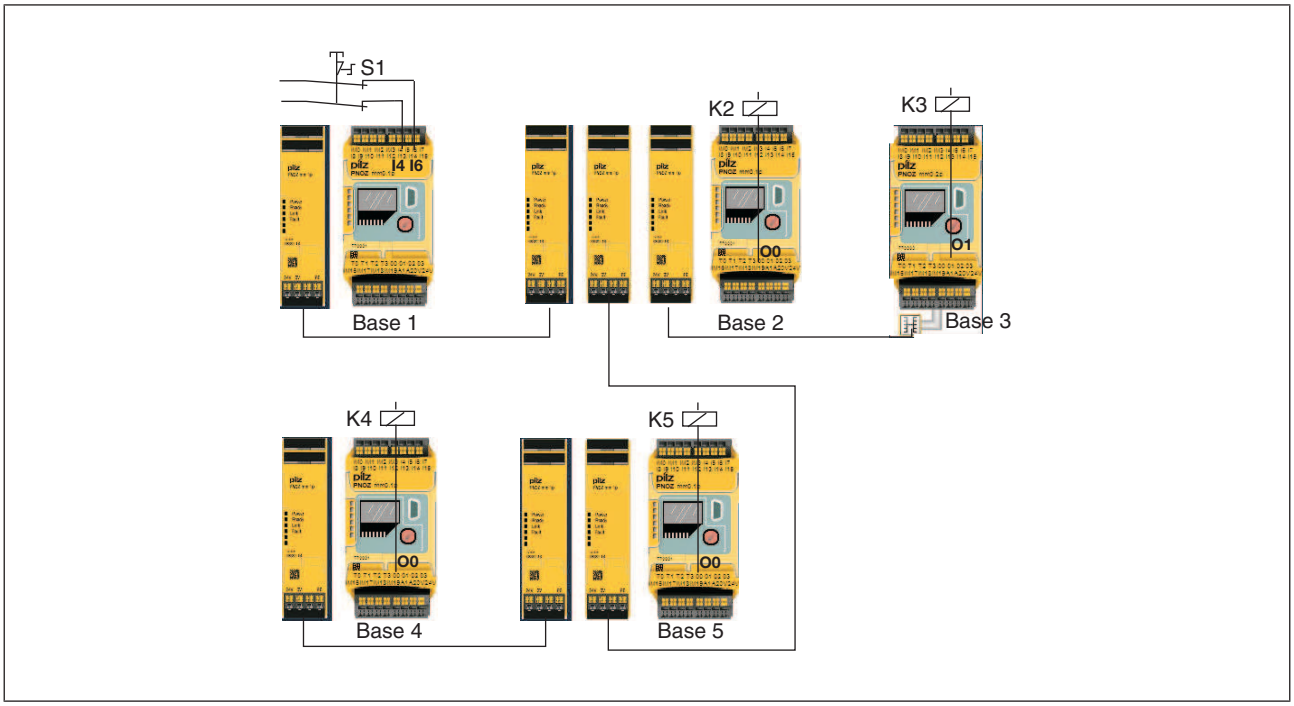

Base units
PNOZ mm0.2p

Technical details

General	
Certifications	**BG, CCC, CE, EAC (Eurasian), KCC, TÜV, cULus Listed**
Electrical data	
Supply voltage	
for	**Supply to the system**
Voltage	**24,0 V**
Kind	**DC**
Voltage tolerance	**-15 %/+20 %**
Output of external power supply (DC)	**35,0 W**
Output of external power supply (DC) at no load	**8,0 W**
Residual ripple DC	**5 %**
Supply voltage	
for	**Supply to the SC outputs**
Voltage	**24 V**
Kind	**DC**
Voltage tolerance	**-15 %/+20 %**
Output of external power supply (DC)	**192,0 W**
Status indicator	**Display, LED**
Configurable inputs/outputs (inputs or auxiliary outputs)	
Number	**8**
Galvanic isolation	**No**
Configurable inputs	
Input voltage in accordance with EN 61131-2 Type 1	**24,0 V**
Input current at rated voltage	**5 mA**
Min. pulse duration	**16 ms**
Pulse suppression	**0,6 ms**
Signal level at "1"	**15 ... 30 V DC**
Signal level at "0"	**-3 ... +5 V DC**
Maximum input delay	**4,0 ms**
Configurable auxiliary outputs	
Voltage	**24,0 V**
Output current	**75 mA**
Power	**1,8 W**
Short circuit-proof	**yes**
Residual current at "0"	**0,5 mA**
Voltage at "1"	**UB - 2 V at 0.1 A**

Base units
PNOZ mm0.2p

Virtual inputs	
Number of virtual inputs	**32**
Inputs	
Number	**12**
Signal level at "0"	**-3 - +5 V DC**
Signal level at "1"	**15 - 30 V DC**
Input voltage in accordance with EN 61131-2 Type 1	**24 V DC**
Input current at rated voltage	**5 mA**
Min. pulse duration	**16 ms**
Pulse suppression	**0,6 ms**
Maximum input delay	**4 ms**
Potential isolation	**No**
Virtual outputs	
Number of virtual outputs	**32**
Semiconductor outputs	
Number	**4**
Switching capability	
Voltage	**24 V**
Current	**2,0 A**
Power	**48 W**
Signal level at "1"	**UB - 0.5 VDC at 2 A**
Residual current at "0"	**0,5 mA**
Max. capacitive load	**1 µF**
Max. duration of off time during self test	**330 µs**
Switch-off delay	**30 ms**
Potential isolation	**yes**
Short circuit-proof	**yes**
Test pulse outputs	
Number of test pulse outputs	**4**
Voltage	**24 V**
Current	**0,1 A**
Max. duration of off time during self test	**5 ms**
Short circuit-proof	**yes**
Potential isolation	**No**
Times	
Switch-on delay	**5,00 s**
Supply interruption before de-energisation	**20 ms**
Simultaneity, channel 1 and 2 max.	**3 s**
Simultaneity in the two-hand circuit	**0,5 s**
Max. data transmission time	**35 ms**

Base units
PNOZ mm0.2p

Environmental data	
Ambient temperature	
In accordance with the standard	**EN 60068-2-14**
Temperature range	**0 - 60 °C**
Forced convection in control cabinet off	**55 °C**
Storage temperature	
In accordance with the standard	**EN 60068-2-1/-2**
Temperature range	**-25 - 70 °C**
Climatic suitability	
In accordance with the standard	**EN 60068-2-30, EN 60068-2-78**
Humidity	**93 % r. h. at 40 °C**
Condensation during operation	**Not permitted**
Max. operating height above sea level	**2000 m**
EMC	**EN 61131-2**
Vibration	
In accordance with the standard	**EN 60068-2-6**
Frequency	**10,0 - 150,0 Hz**
Acceleration	**1 g**
Shock stress	
In accordance with the standard	**EN 60068-2-27**
Acceleration	**15 g**
Duration	**11 ms**
Airgap creepage	
In accordance with the standard	**EN 61131-2**
Overvoltage category	**II**
Pollution degree	**2**
Rated insulation voltage	**30 V**
Rated impulse withstand voltage	**2,50 kV**
Protection type	
In accordance with the standard	**EN 60529**
Mounting area (e.g. control cabinet)	**IP54**
Housing	**IP20**
Terminals	**IP20**
Potential isolation	
Potential isolation between	**SC output and system voltage**
Type of potential isolation	**Basic insulation**
Rated surge voltage	**2500 V**
Mechanical data	
Mounting position	**horizontally on mounting rail**
DIN rail	
Top hat rail	**35 x 7,5 EN 50022**
Recess width	**27 mm**

Base units
PNOZ mm0.2p

Mechanical data	
Max. cable length	
Max. cable length per input	**1,0 km**
Sum of individual cable lengths at the test pulse output	**2 km**
Max. cable length between two link modules	**1 km**
Material	
Bottom	**PC**
Front	**PC**
Top	**PC**
Connection type	**Spring-loaded terminal, screw terminal**
Conductor cross section with screw terminals	
1 core flexible	**0,25 - 2,50 mm², 24 - 12 AWG**
2 core with the same cross section, flexible without crimp connectors or with TWIN crimp connectors	**0,20 - 1,50 mm², 24 - 16 AWG**
Torque setting with screw terminals	**0,50 Nm**
Conductor cross section with spring-loaded terminals: Flexible with/without crimp connector	**0,20 - 2,50 mm², 24 - 12 AWG**
Spring-loaded terminals: Terminal points per connection	**2**
Stripping length with spring-loaded terminals	**9,0 mm**
Dimensions	
Height	**100,0 mm**
Width	**45,0 mm**
Depth	**120,0 mm**
Weight	**236 g**

Where standards are undated, the 2011-01 latest editions shall apply.

Safety characteristic data

Unit	Operating mode	EN ISO 13849-1: 2015 PL	EN ISO 13849-1: 2015 Category	EN 62061 SIL CL	EN 62061 PFH_D [1/h]	EN ISO 13849-1: 2015 T_M [year]
Logic						
CPU	**2-channel**	**PL e**	**Cat. 4**	**SIL CL 3**	**1,54E-09**	**20**
Expansion right	–	**PL e**	**Cat. 4**	**SIL CL 3**	**2,13E-10**	**20**
Expansion left	–	**PL e**	**Cat. 4**	**SIL CL 3**	**2,38E-10**	**20**
Link interface	–	**PL e**	**Cat. 4**	**SIL CL 3**	**6,53E-10**	**20**

Base units
PNOZ mm0.2p

Input						
SC inputs	**1-channel**	**PL d**	**Cat. 2**	**SIL CL 2**	**3,95E-09**	**20**
SC inputs	**2-channel**	**PL e**	**Cat. 4**	**SIL CL 3**	**4,61E-10**	**20**
SC inputs	**Short circuit-forming safety mats**	**PL d**	**Cat. 3**	**SIL CL 2**	**1,86E-09**	**20**
SC inputs	**1-ch., pulsed light barrier**	**PL e**	**Cat. 4**	**SIL CL 3**	**3,95E-10**	**20**
Output						
SC outputs	**1-channel with advanced fault detection**	**PL e**	**Cat. 4**	**SIL CL 3**	**7,65E-10**	**20**
SC outputs	**1-channel**	**PL d**	**Cat. 2**	**SIL CL 2**	**8,90E-10**	**20**
SC outputs	**2-channel**	**PL e**	**Cat. 4**	**SIL CL 3**	**7,86E-10**	**20**

Explanatory notes for the safety-related characteristic data:

- The SIL CL value in accordance with EN 62061 corresponds to the SIL value in accordance with EN 61508.
- T_M is the maximum mission time in accordance with EN ISO 13849-1. The value also applies as the retest interval in accordance with EN 61508-6 and IEC 61511 and as the proof test interval and mission time in accordance with EN 62061.

All the units used within a safety function must be considered when calculating the safety characteristic data.

Base units
PNOZ mm0.2p

Supplementary data

Maximum capacitive load C (µF) with load current I (A) at the semiconductor outputs

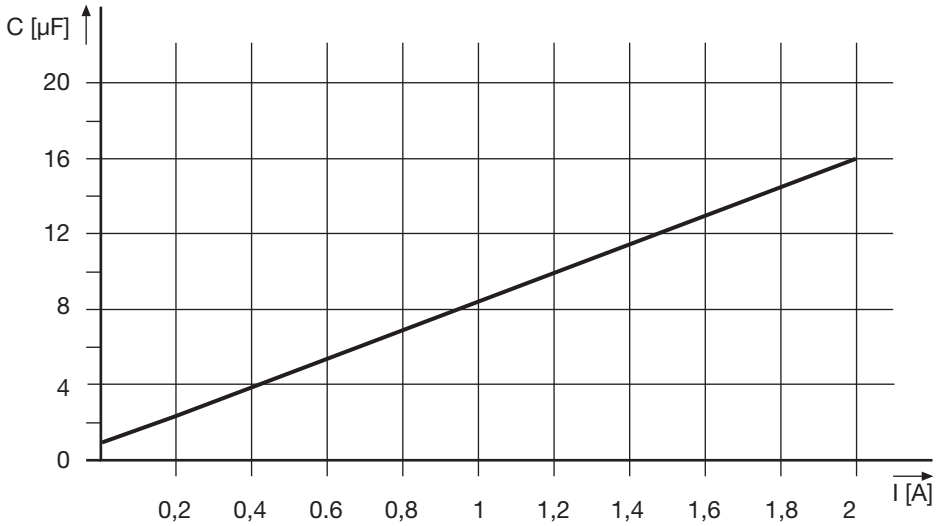

Maximum permitted total current of the semiconductor outputs

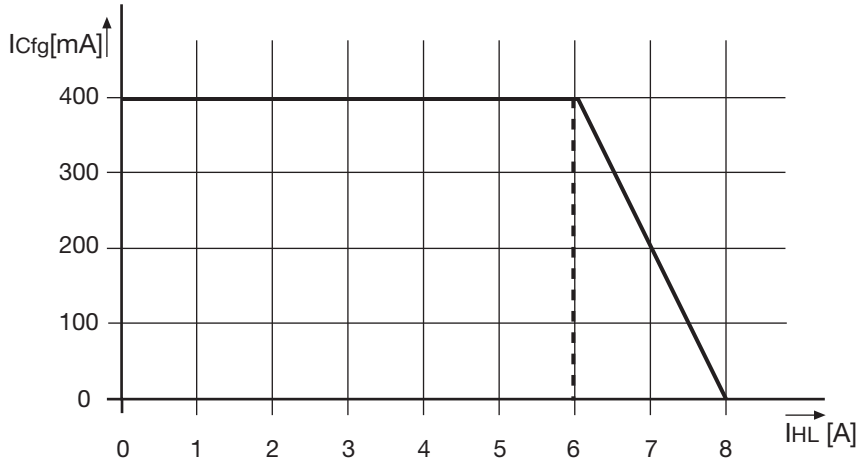

I_{Cfg}: Total current of the configurable semiconductor outputs (auxiliary outputs)

I_{HL}: Total current: Semiconductor outputs (safety outputs)

Base units
PNOZ mm0.2p

Order reference

Product

Product type	Features	Order no.
PNOZ mm0.2p	Base unit	772 002

Accessories

Terminals

Product type	Features	Order no.
PNOZ s Set1 spring loaded terminals	1 set of spring-loaded terminals	751 008
PNOZ s Set1 screw terminals	1 set of screw terminals	750 008

Terminator

Product type	Features	Order No.
PNOZ s terminator plug	Right terminator, yellow, x10	750 010
PNOZ mm0.xp terminator left	Left terminator, black/yellow, x1	779 261

Cable

Product type	Features	Order no.
PSSu A USB-CAB03	Mini USB cable, 3 m	312 992
PSSu A USB-CAB05	Mini USB cable, 5 m	312 993

Link modules
PNOZ mml1p



Overview

Unit features

Application of the product PNOZ mml1p:

Link module to safely connect two configurable small control systems PNOZmulti.

The product has the following features:

- Connection options:
  - Two PNOZmulti Mini base units

    or
  - One PNOZmulti Mini base unit with one PNOZmulti base unit
- Can be configured in the PNOZmulti Configurator
- Point-to-point connection via 4-core shielded and twisted-pair cable
- 32 virtual inputs and 32 virtual outputs
- Status indicators
- LED indicators for
  - Operating status
  - Error
  - Connection status
- Plug-in connection terminals:
  Either spring-loaded terminal or screw terminal available as an accessory (see Order references for accessories [📖 772]).

Link modules
PNOZ mml1p

Front view

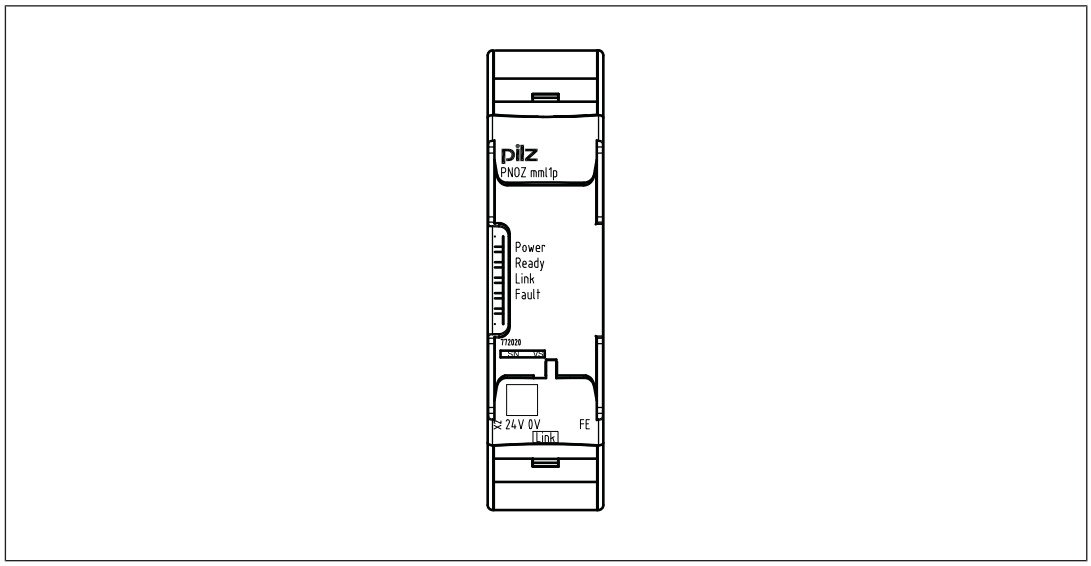

Key:

- X2:
  - 0 V, 24 V:Supply connections
  - FE: Functional earth
- Link:
  Connection
- LEDs:
  - Power
  - Ready
  - Link
  - Fault

Function Description

Functions

The link module PNOZ mml1p is used to safely transfer the input information from 32 virtual inputs and 32 virtual outputs between two PNOZmulti systems. One link module is assigned to each base unit. Data is exchanged cyclically.

The function of the inputs and outputs on the control system depends on the safety circuit created using the PNOZmulti Configurator. A chip card is used to download the safety circuit to the base unit. The base unit has 2 microcontrollers that monitor each other. They evaluate the input circuits on the base unit and expansion modules and switch the outputs on the base unit and expansion modules accordingly.

Link modules
PNOZ mml1p

The LEDs on the base unit and expansion modules indicate the status of the configurable control system PNOZmulti.

The online help on the PNOZmulti Configurator contains descriptions of the operating modes and all the functions of the control system, plus connection examples.

Data exchange:

- Data is exchanged cyclically.
- After the end of a PNOZmulti cycle, each base unit sends its output data to its link module. This output data is immediately sent to the link module on the other base unit.
- At the same time, the base unit reads the input data from the link module.

Connection of multiple base units:

Any number of base units can be connected via link modules. Two link modules are required for a connection between two base units. However, only a maximum of 4 link modules may be connected to any one base unit.

Data transmission time:

The t_{BUS} data transmission time is the time between the virtual output at base unit 1 being set and the virtual input at base unit 2 becoming available (see "Technical details").

The maximum reaction time for series connection of n base units

This is the time between the activation of a safety function at the input on one base unit and the switching of an output on the connected base unit.

- The maximum reaction time t_{SUM} includes the following times:

  t_{ON}: Input delay = 4 ms

  t_{COND}: Switch-off delay of semiconductor output = 30 ms

  t_{REL}: Switch-off delay of relay output = 50 ms

  t_{BUS}: Data transmission time between two base units = 35 ms

  n: Number of connections between base units

The maximum reaction time t_{SUM} for series connection of n base units

- On semiconductor outputs:

  $t_{SUM} = t_{ON} + (n * t_{BUS}) + t_{COND}$
- On relay outputs:

  $t_{SUM} = t_{ON} + (n * t_{BUS}) + t_{REL}$
- Input delay and switch-off delay are only included once in the reaction time. The data transmission time between the link modules is multiplied by the number of connections.
- Please refer to the connection examples under "Preparing for operation".

Link modules
PNOZ mml1p

Virtual inputs and outputs:

Inputs and outputs for both PNOZmulti systems are assigned in the PNOZmulti Configurator. Inputs and outputs with the same number are assigned to each other, e.g. output o5 on one PNOZmulti system to input i5 on the other PNOZmulti system.

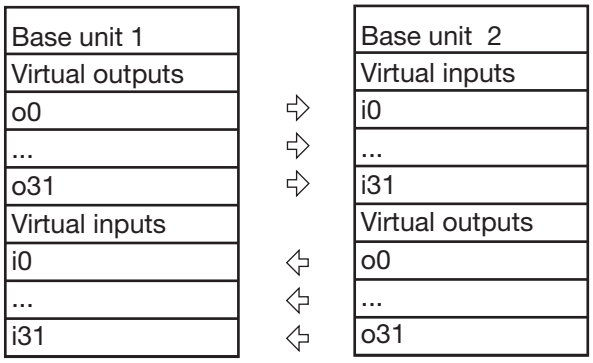

Block diagram

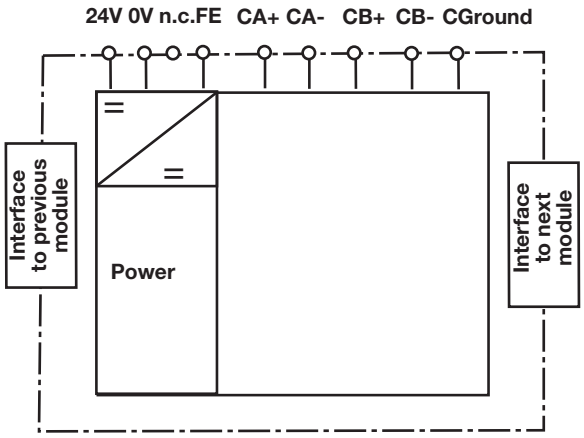

Link modules
PNOZ mml1p

Installation

Dimensions

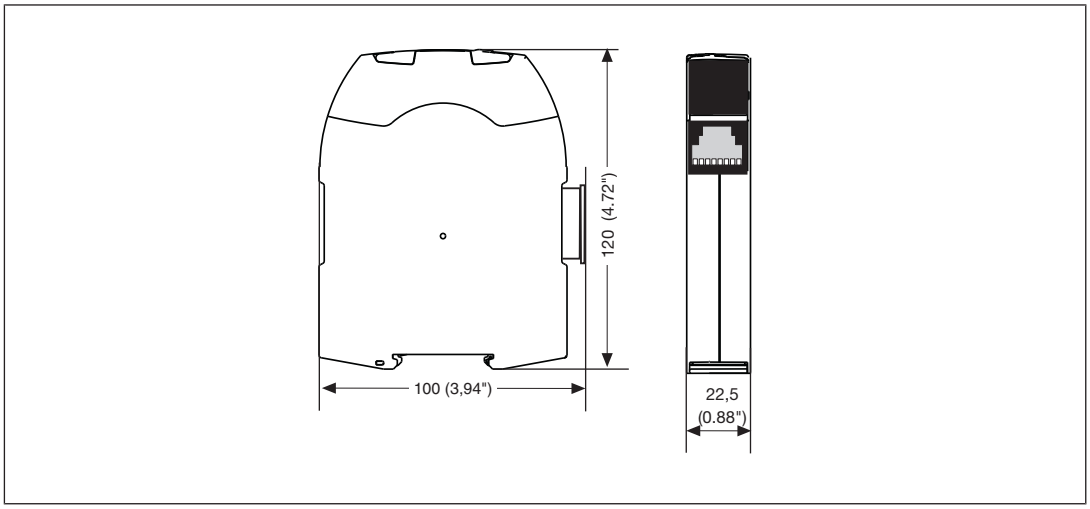

Commissioning

General wiring guidelines

The wiring is defined in the circuit diagram of the PNOZmulti Configurator.

Please note:

- Information given in the Technical details [📖 584] must be followed.
- The position of the expansion module is specified in the Hardware configuration of the PNOZmulti Configurator.
- Use copper wiring with a temperature stability of 75 °C.
- The power supply must meet the regulations for extra low voltages with protective electrical separation (SELV, PELV).
- 2 connection terminals are available for each of the supply connections 24 V and 0 V. This means that the supply voltage can be looped through several connections. The current at each terminal may not exceed 3 A.
- The max. cable length between two link modules on a connection with one link module
  - PNOZ ml1p <V2.0: 100 m
  - PNOZ ml1p from V2.0, PNOZ mml1p: 1000 m
- Connect the inputs and outputs from two link modules with 4-core shielded cable. The cables must be twisted in pairs.
- Note the crossover cabling, e.g. CA+ with CB+.
- The cables must be classified into a minimum of Category 5 in accordance with ISO/IEC 11801.

Link modules
PNOZ mml1p

Connection

RJ45 socket 8-pin	PIN	Layout
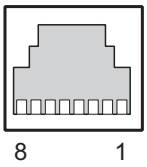	1	CA+
	2	CA-
	3	CB+
	4	n.c.
	5	n.c.
	6	CB-
	7	n.c.
	8	n.c.
	Shield	CGround

Supply voltage	AC	DC
	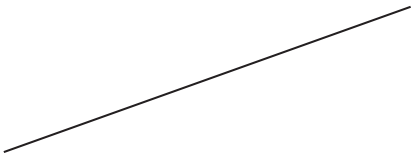	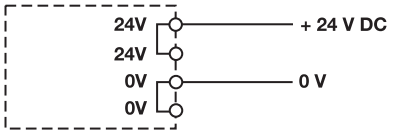

Supply voltage

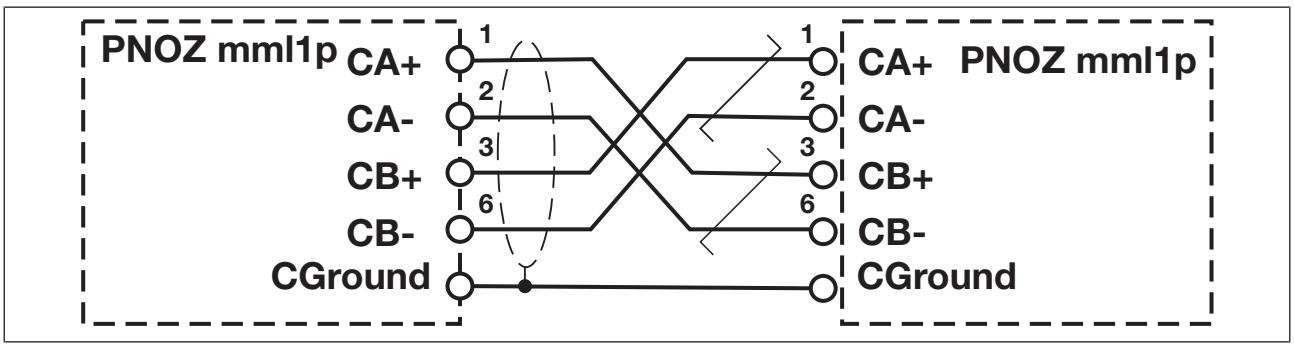

Connection of two base units PNOZmulti Mini via PNOZ mml1p

Link modules
PNOZ mml1p

Connection examples

Example: Series connection of 3 base units

Reaction time t_{SUM} between base unit Base 1 and Base 2:
Input delay t_{ON} at I4 and I6 + data transmission time1 * t_{BUS} through link module/interface + switch-off delay t_{COND} of the semiconductor output at O0
$t_{SUM} = t_{ON} + (n * t_{BUS}) + t_{COND}$
t_{SUM} = 4 ms + (1 * 35 ms) + 30 ms = 69 ms
Reaction time t_{SUM} between base unit Base 1 and Base 3:
Input delay t_{ON} at I4 und I6 + data transmission time 2 * t_{BUS} through link modules/interfaces + switch-off delay t_{COND} of the semiconductor output at O1
$t_{SUM} = t_{ON} + (n * t_{BUS}) + t_{COND}$
t_{SUM} = 4 ms + (2 * 35 ms) + 30 ms = 104 ms

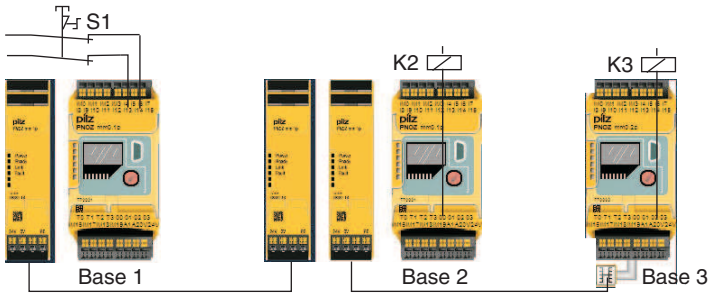

Link modules
PNOZ mml1p

Example: Connection of 5 base units

The reaction times are calculated in the same way as application example 1. After pressing S1 on Base 1, the semiconductor outputs switch after the following reaction times t_{SUM}:
O0 on Base 2: 69 ms
O1 on Base 3: 104 ms
O0 on Base 4: 139 ms
O0 on Base 5: 104 ms

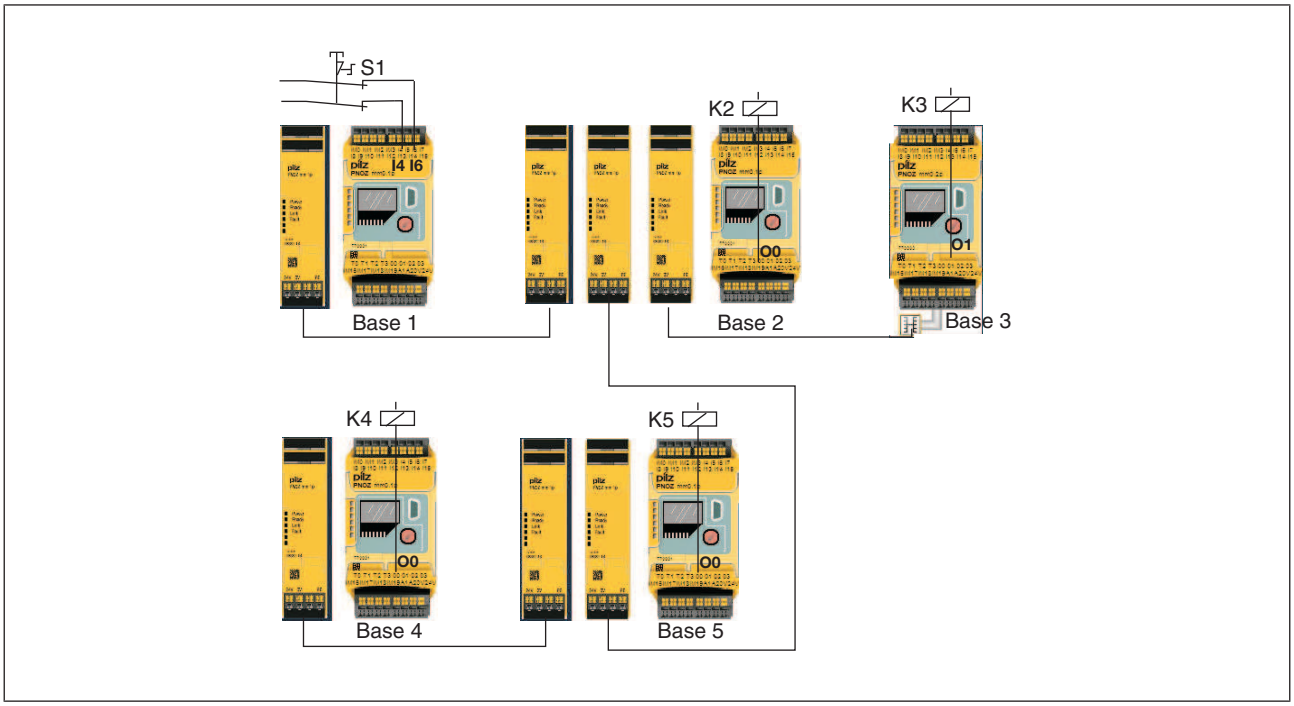

Technical details

General	
Certifications	**BG, CCC, CE, EAC (Eurasian), TÜV, cULus Listed**
Electrical data	
Supply voltage	
for	**Module supply**
Voltage	**24,0 V**
Kind	**DC**
Voltage tolerance	**-15 %/+20 %**
Output of external power supply (DC)	**5,0 W**
Residual ripple DC	**5 %**
Status indicator	**LED**
Virtual inputs	
Number of virtual inputs	**32**

Link modules
PNOZ mml1p

Virtual outputs	
Number of virtual outputs	**32**
Times	
Switch-on delay	**5,00 s**
Supply interruption before de-energisation	**20 ms**
Max. data transmission time	**35 ms**
Environmental data	
Ambient temperature	
In accordance with the standard	**EN 60068-2-14**
Temperature range	**0 - 60 °C**
Storage temperature	
In accordance with the standard	**EN 60068-2-1/-2**
Temperature range	**-25 - 70 °C**
Climatic suitability	
In accordance with the standard	**EN 60068-2-30, EN 60068-2-78**
Humidity	**93 % r. h. at 40 °C**
Condensation during operation	**Not permitted**
EMC	**EN 61131-2**
Vibration	
In accordance with the standard	**EN 60068-2-6**
Frequency	**10,0 - 150,0 Hz**
Acceleration	**1g**
Shock stress	
In accordance with the standard	**EN 60068-2-27**
Acceleration	**15g**
Duration	**11 ms**
Max. operating height above sea level	**2000 m**
Airgap creepage	
Overvoltage category	**II**
Pollution degree	**2**
Rated insulation voltage	**30 V**
Rated impulse withstand voltage	**2,50 kV**
Protection type	
In accordance with the standard	**EN 60529**
Mounting area (e.g. control cabinet)	**IP54**
Housing	**IP20**
Terminals	**IP20**
Mechanical data	
Mounting position	**horizontally on mounting rail**

Link modules
PNOZ mml1p

Mechanical data	
DIN rail	
Top hat rail	**35 x 7,5 EN 50022**
Recess width	**27 mm**
Max. cable length between two link modules	**1 km**
Material	
Bottom	**PC**
Front	**PC**
Top	**PC**
Connection type	**Spring-loaded terminal, screw terminal**
Conductor cross section with screw terminals	
1 core flexible	**0,25 - 2,50 mm², 24 - 12 AWG**
2 core with the same cross section, flexible without crimp connectors or with TWIN crimp connectors	**0,20 - 1,50 mm², 24 - 16 AWG**
Torque setting with screw terminals	**0,50 Nm**
Conductor cross section with spring-loaded terminals: Flexible with/without crimp connector	**0,20 - 2,50 mm², 24 - 12 AWG**
Spring-loaded terminals: Terminal points per connection	**2**
Stripping length with spring-loaded terminals	**9 mm**
Dimensions	
Height	**100,0 mm**
Width	**22,5 mm**
Depth	**120,0 mm**
Weight	**95 g**

Where standards are undated, the 2011-01 latest editions shall apply.

Link modules
PNOZ mml1p

Order reference

Product

Product type	Features	Order No.
PNOZ mml1p	Expansion module	772 020

Accessories

Connection terminals

Product type	Features	Order no.
Spring terminals PNOZ mmc2p, mml1p 1 pc.	Spring-loaded terminals, 1 piece	783 538
Spring terminals PNOZ mmc2p,mml1p 10 pcs	Spring-loaded terminals, 10 pieces	783 539
Screw terminals PNOZ mmc2p, mml1p 1 pc.	Screw terminals, 1 piece	793 538
Screw terminals PNOZ mmc2p,mml1p 10 pcs.	Screw terminals, 10 piece	793 539

Terminator, jumper

Product type	Features	Order no.
PNOZ mm0.xp connector left	Jumper yellow/black to connect the modules, 10 pieces	779 260

Link modules
PNOZ mml2p



Overview

Unit features

Application of the product PNOZ mml2p:

Link module to safely connect decentralised input/output modules to a configurable control system PNOZmulti Mini.

The product has the following features:

- Can be configured in the PNOZmulti Configurator
- Max. 4 PNOZ mml2p can be connected to the base unit
- Max. 4 decentralised modules can be connected to the link module PNOZ mml2p
- LEDs for
  - Operating state
  - Error
  - Connection status
- Plug-in connection terminals:
  Either spring-loaded terminal or screw terminal available as an accessory (see Order references for accessories [📖 772]).

Link modules
PNOZ mml2p

Front view

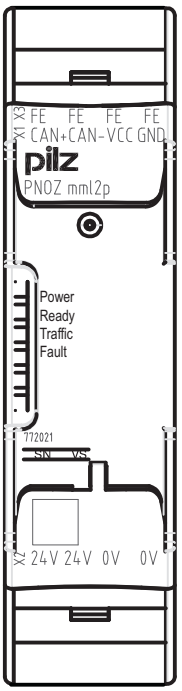

Key:

- 0 V, 24 V:
  Supply connections
- CAN+, CAN-, VCC, GND:
  Connection for decentralised modules
- FE:
  Functional earth

Function description

Operation

The link module PNOZ mml2p is used to safely transfer the input information from decentralised modules to the safety system PNOZmulti.

The function of the inputs and outputs on the control system depends on the safety circuit created using the PNOZmulti Configurator. A chip card is used to download the safety circuit to the base unit. The base unit has 2 microcontrollers that monitor each other. They evaluate the input circuits on the base unit and expansion modules and switch the outputs on the base unit and expansion modules accordingly.

The LEDs on the base unit and expansion modules indicate the status of the configurable control system PNOZmulti.

Link modules
PNOZ mml2p

The online help on the PNOZmulti Configurator contains descriptions of the operating modes and all the functions of the control system, plus connection examples.

Data exchange:

- Communication with the decentralised modules is via a safe data link.
- The link module PNOZ mml2p reads the input information from the decentralised modules as part of each cycle and then forwards it to the base unit.
- At the end of a PNOZmulti cycle, the base unit sends its output data to its link module. This output data is immediately sent to the decentralised modules.

Linking several decentralised modules:

- A maximum of 4 link modules can be connected to a base unit PNOZmulti Mini.
- A maximum of 4 decentralised modules can be connected to a link module PNOZ mml2p.
- If a decentralised module receives data intended for a different decentralised module that is connected, the data is forwarded without being processed.

Block diagram

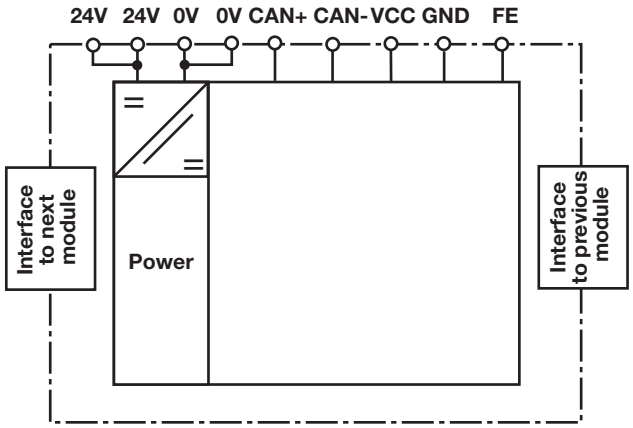

Link modules
PNOZ mml2p

Installation

Dimensions

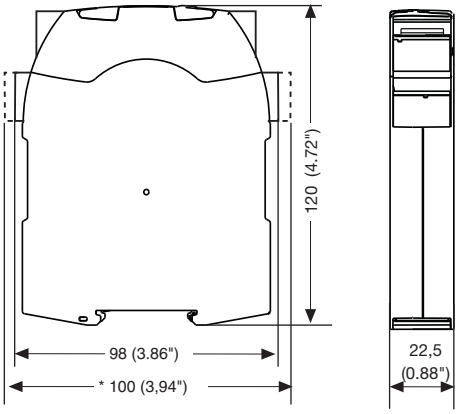

Commissioning

General wiring guidelines

The wiring is defined in the circuit diagram of the PNOZmulti Configurator.

Please note:

- Information given in the Technical details [📖 596] must be followed.
- The position of the expansion module is specified in the Hardware configuration of the PNOZmulti Configurator.
- Use copper wiring with a temperature stability of 75 °C.
- External measures must be used to connect the FE terminal to the function earth (e.g. mounting rail).
- The power supply must meet the regulations for extra low voltages with protective electrical separation (SELV, PELV).
- Two connection terminals are available for each of the supply connections 24 V and 0 V (semiconductor outputs), plus A1 and A2 (power supply). This means that the supply voltage can be looped through several connections. When the supply voltage is looped, the current at each terminal may not exceed 3 A.
- Please refer to the technical details for information on the maximum cable length. Please also read the section entitled Voltage drop [📖 593].
- With a cable length of 30 m or above, or in environments with strong interfaces, shielded cables must be used.

Link modules
PNOZ mml2p

- If there are signal interferences/EMC problems that are to be expected or present, we recommend that you use a shielded cable from the beginning. In addition, you can place the braided shield of the cables directly next to the device via a shielded terminal to the functional earth (mounting rail).
- Pilz pre-assembled cables can be used to connect the decentralised modules (see Order references [598]).
- The plug-in connection terminals are either designed as cage clamp terminals or screw terminals (see Order references [598]).

Insulation voltage test

The product PNOZ mml2p is connected to functional earth ⏚ via protection elements on the supply voltage. Insulation voltage tests are only possible with voltages up to ca. 42 V.

Connection

Supply voltage	AC	DC
	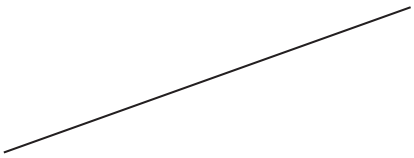	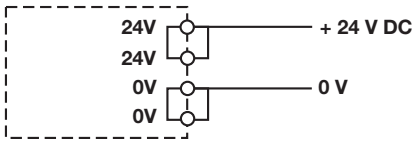

Supply voltage

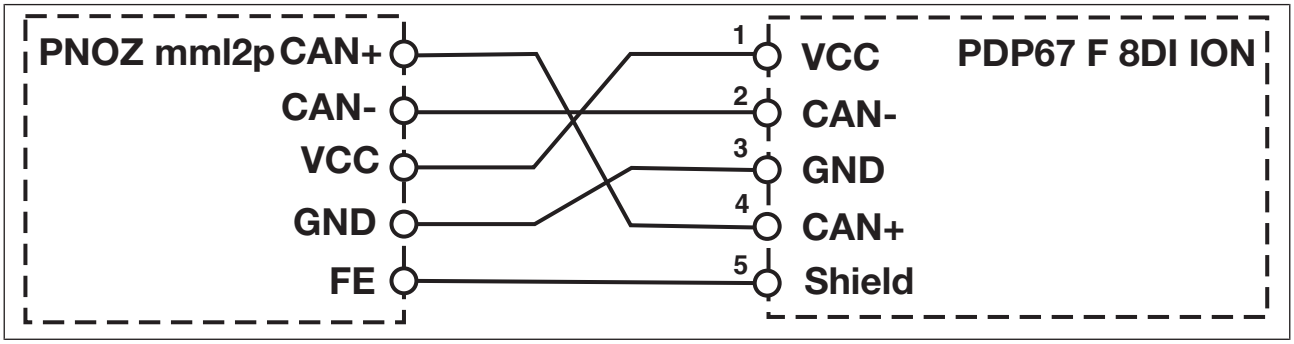

Connection to a decentralised input module PDP67

Link modules
PNOZ mml2p

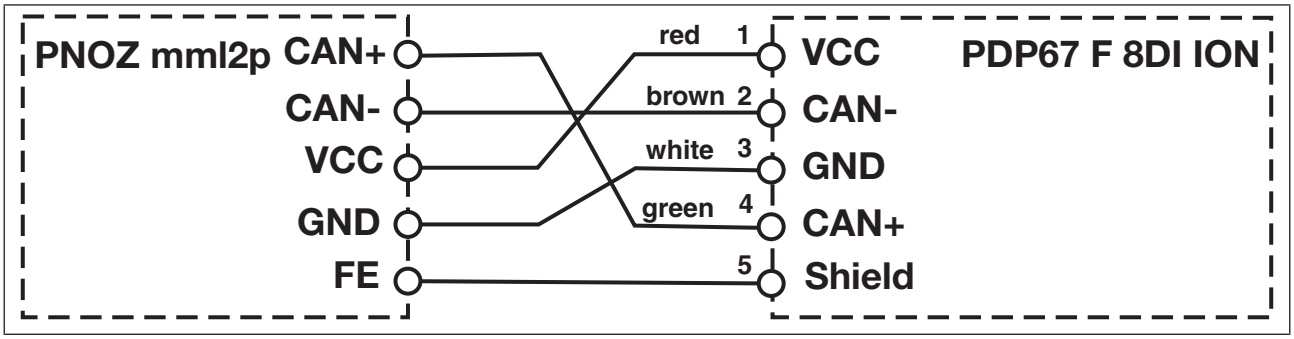

Connection when using the PSS SB BUSCABLE LC in conjunction with a Pilz self-assembly "PSS67 M12 connector" (see order reference in the Technical Catalogue)

Series connection of 4 decentralised modules

You can connect up to 4 decentralised modules in series to a PNOZmulti link module.

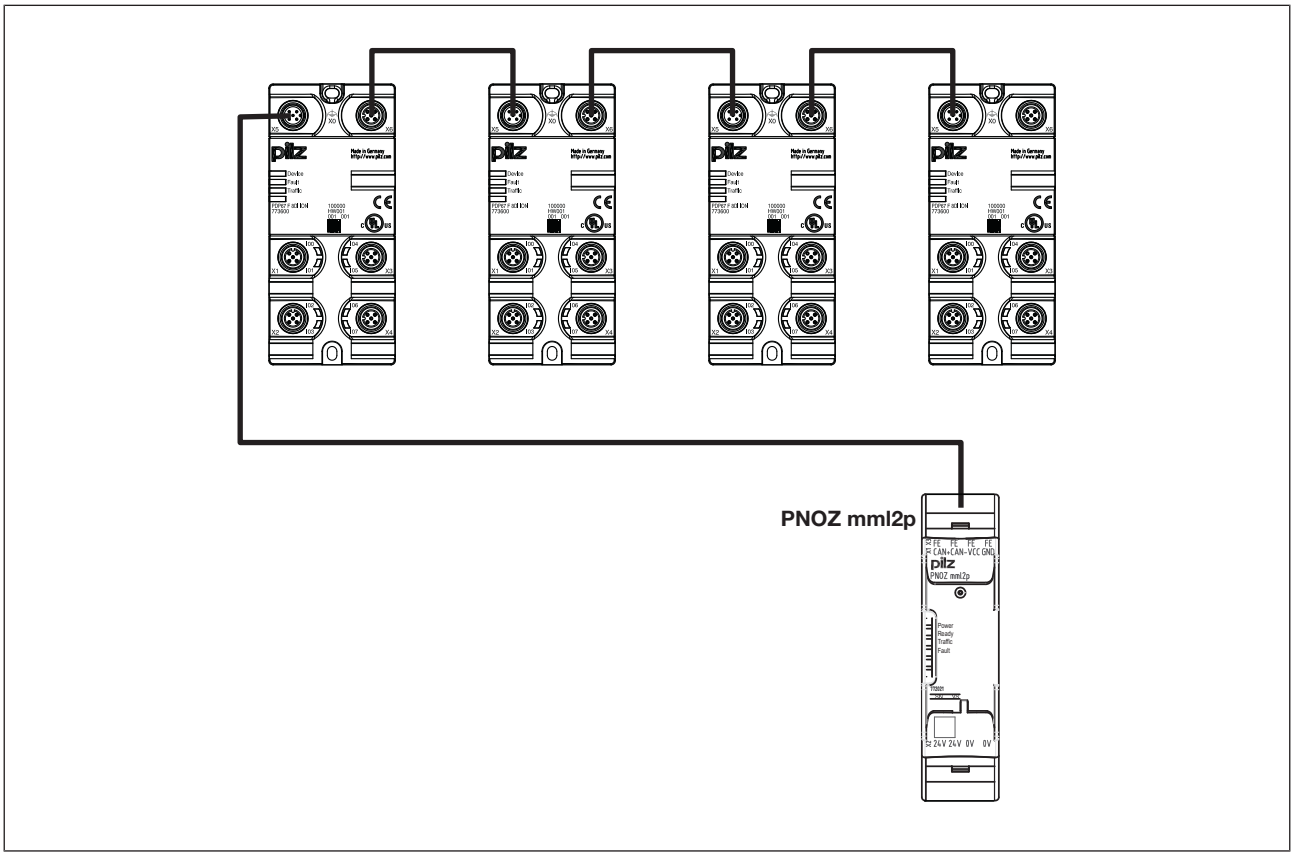

Voltage drop

The max. cable length depends on the voltage drop in the supply voltage cables. The level of voltage drop is determined by the:

- Cable resistance on the supply voltage cables
- Operating current of the modules

Link modules
PNOZ mml2p

- Load on the modules

To increase the max. cable length, the input voltage can be permanently increased by the voltage tolerance (see Technical Details).

Guidelines for various cable types

Cable type	Voltage drop per 10 m and per 100 mA
PSS SB BUSCABLE LC	0.1 V
Sensor cable 0.25 mm^2	0.15 V
Sensor cable 0.34 mm^2	0.11 V
Sensor cable 0.5 mm^2	0.07 V

Calculation example

- The PSS SB BUSCABLE LC is used in accordance with the pin assignment in section 6.2.2.
  Voltage drop per 10 m and per 100 mA: 0.1 V

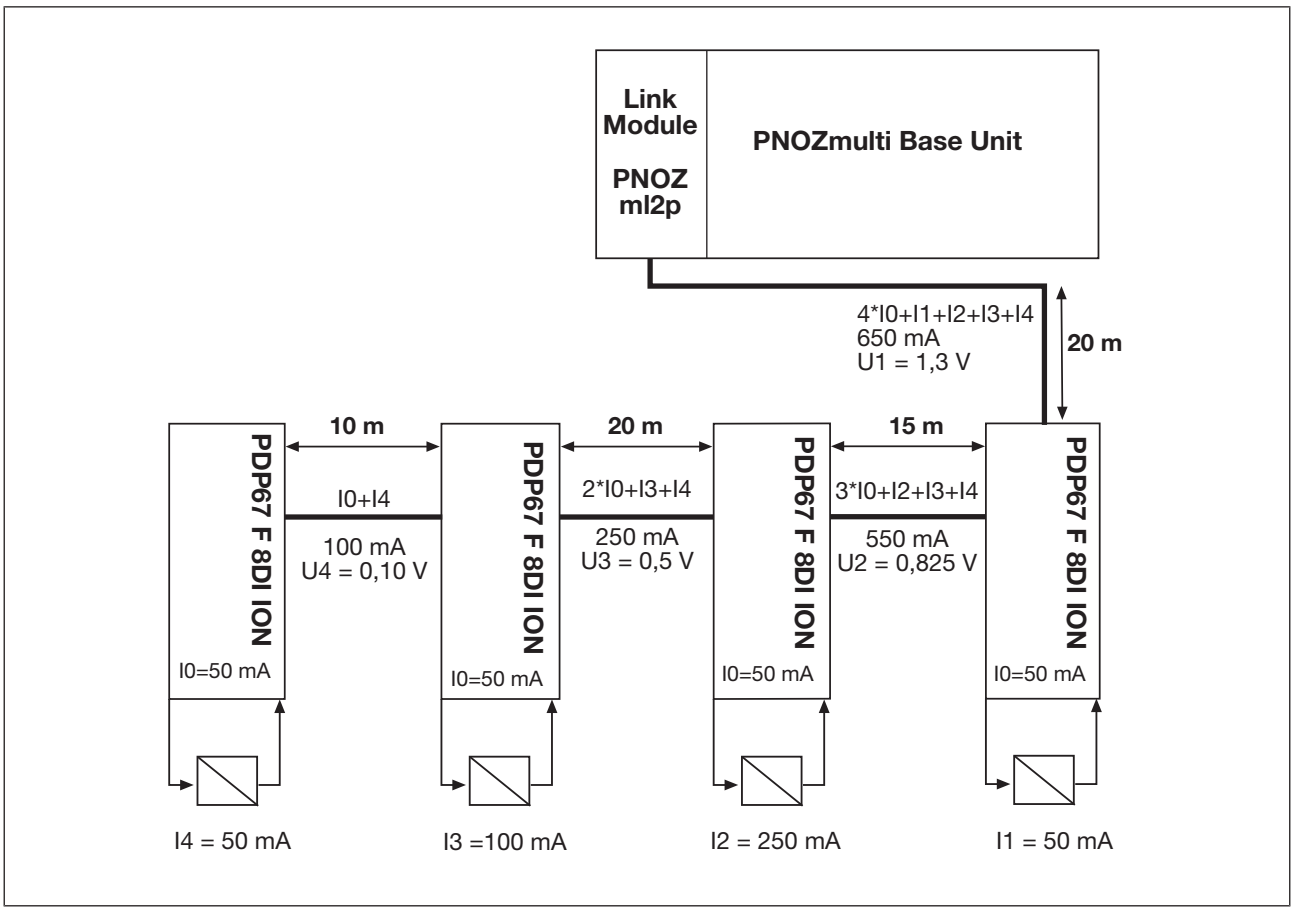

Link modules
PNOZ mml2p

Key:

- I0: Module's consumption.
- I1 ... I5: Load current taken from the module
- U1 … U4: Voltage drop on the respective connection path

Total voltage drop from the link module PNOZ mml2p to the final PDP67 F 8DI ION:
$U_{total} = U_1 + U_2 + U_3 + U_4$
$U_{total} = 1.3\ V + 0.825\ V + 0.5\ V + 0.10\ V = 2.725\ V$

Link modules
PNOZ mml2p

Technical details

General	
Certifications	**BG, CCC, CE, EAC (Eurasian), TÜV, cULus Listed**
Electrical data	
Supply voltage	
for	**Module supply**
Voltage	**24,0 V**
Kind	**DC**
Voltage tolerance	**-15 %/+20 %**
Output of external power supply (DC)	**101,0 W**
Output of external power supply (DC) at no load	**5,0 W**
Residual ripple DC	**5 %**
Status indicator	**LED**
Inputs	
Maximum input delay	**15 ms**
Semiconductor outputs	
Switch-off delay	**35 ms**
Test pulse outputs	
Maximum output current, decentralised module supply	**4 A**
Short circuit protection of decentralised module supply	**yes**
Times	
Switch-on delay	**5,00 s**
Supply interruption before de-energisation	**20 ms**
Environmental data	
Ambient temperature	
In accordance with the standard	**EN 60068-2-14**
Temperature range	**0 - 60 °C**
Storage temperature	
In accordance with the standard	**EN 60068-2-1/-2**
Temperature range	**-25 - 70 °C**
Climatic suitability	
In accordance with the standard	**EN 60068-2-30, EN 60068-2-78**
Humidity	**93 % r. h. at 40 °C**
Condensation during operation	**Not permitted**
EMC	**EN 61131-2**

Link modules
PNOZ mml2p

Environmental data	
Vibration	
In accordance with the standard	**EN 60068-2-6**
Frequency	**10,0 - 150,0 Hz**
Acceleration	**1g**
Shock stress	
In accordance with the standard	**EN 60068-2-27**
Number of shocks	**3**
Acceleration	**15g**
Duration	**11 ms**
In accordance with the standard	**EN 60068-2-27**
Number of shocks	**500**
Acceleration	**25g**
Duration	**6 ms**
Max. operating height above sea level	**2000 m**
Airgap creepage	
Overvoltage category	**II**
Pollution degree	**2**
Rated insulation voltage	**30 V**
Rated impulse withstand voltage	**0,50 kV**
Protection type	
In accordance with the standard	**EN 60529**
Mounting area (e.g. control cabinet)	**IP54**
Housing	**IP20**
Terminals	**IP20**
Mechanical data	
Mounting position	**horizontally on mounting rail**
DIN rail	
Top hat rail	**35 x 7,5 EN 50022**
Recess width	**27 mm**
Max. cable length unshielded	**30 m**
Max. cable length shielded	**100 m**
Material	
Bottom	**PC**
Front	**PC**
Top	**PC**
Connection type	**Spring-loaded terminal, screw terminal**
Conductor cross section with screw terminals	
1 core flexible	**0,25 - 2,50 mm², 24 - 12 AWG**
2 core with the same cross section, flexible without crimp connectors or with TWIN crimp connectors	**0,20 - 1,50 mm², 24 - 16 AWG**
Torque setting with screw terminals	**0,50 Nm**

Link modules
PNOZ mml2p

Mechanical data	
Conductor cross section with spring-loaded terminals: Flexible with/without crimp connector	**0,20 - 2,50 mm², 24 - 12 AWG**
Spring-loaded terminals: Terminal points per connection	**2**
Stripping length with spring-loaded terminals	**9 mm**
Dimensions	
Height	**100,0 mm**
Width	**22,5 mm**
Depth	**120,0 mm**
Weight	**98 g**

Where standards are undated, the 2011-01 latest editions shall apply.

Order reference

Product

Product type	Features	Order No.
PNOZ mml2p	Link Module	772 021

Accessories

Adapter

Product type	Features	Order No.
PSEN ma adapter	Adapter for connection to safety switch PSENmag	380 300
PSEN cs adapter	Adapter for connection to safety switch PSENcode	380 301
PSEN sl adapter	Adapter for connection to safety switch PSENslock	380 325

Cable

Product type	Features	Order No.
PSS SB BUSCABLE LC	Cable, shielded, 1 - 100 m	311074
PSS67 I/O Cable	Cable, 1 - 30 m	380 320
PSS67 Cable M8sf M12sm	Cable, straight M12 connector, straight M8 socket, 4-pin, 3 m	380 200
PSS67 Cable M8sf M12sm	Cable, straight M12 connector, straight M8 socket, 4-pin, 5 m	380 201
PSS67 Cable M8sf M12sm	Cable, straight M12 connector, straight M8 socket, 4-pin, 10 m	380 202

Link modules
PNOZ mml2p

Product type	Features	Order No.
PSS67 Cable M8sf M12sm	Cable, straight M12 connector, straight M8 socket, 4-pin, 30 m	380 203
PSS67 Cable M8af M12sm	Cable, straight M12 connector, angled M8 socket, 4-pin, 3m	380 204
PSS67 Cable M8af M12sm	Cable, straight M12 connector, angled M8 socket, 4-pin, 5 m	380 205
PSS67 Cable M8af M12sm	Cable, straight M12 connector, angled M8 socket, 4-pin, 10 m	380 206
PSS67 Cable M8af M12sm	Cable, straight M12 connector, angled M8 socket, 4-pin, 30 m	380 207
PSS67 Cable M12sf M12sm	Cable, straight M12 connector, straight M12 socket, 5-pin, 3m	380 208
PSS67 Cable M12sf M12sm	Cable, straight M12 connector, straight M12 socket, 5-pin, 5 m	380 209
PSS67 Cable M12sf M12sm	Cable, straight M12 connector, straight M12 socket, 5-pin, 10 m	380 210
PSS67 Cable M12sf M12sm	Cable, straight M12 connector, straight M12 socket, 5-pin, 20 m	380 220
PSS67 Cable M12sf M12sm	Cable, straight M12 connector, straight M12 socket, 5-pin, 30 m	380 211
PSS67 Cable M12af M12am	Cable, angled M12 connector, angled M12 socket, 5-pin, 3m	380 212
PSS67 Cable M12af M12am	Cable, angled M12 connector, angled M12 socket, 5-pin, 5 m	380 213
PSS67 Cable M12af M12am	Cable, angled M12 connector, angled M12 socket, 5-pin, 10 m	380 214
PSS67 Cable M12af M12am	Cable, angled M12 connector, angled M12 socket, 5-pin, 30 m	380 215
PSEN op cable axial M12 5-pole 3m	Cable, straight, M12, 5-pin, open-ended socket, 3 m	630310
PSEN op cable axial M12 5-pole 5m	Cable, straight, M12, 5-pin, open-ended socket, 5 m	630311
PSEN op cable axial M12 5-pole 10m	Cable, straight, M12, 5-pin, open-ended socket, 10 m	630312
PSEN op cable axial M12 5-pole 20m	Cable, straight, M12, 5-pin, open-ended socket, 20 m	630298
PSEN op cable axial M12 5-pole 30m	Cable, straight, M12, 5-pin, open-ended socket, 30 m	630297

Link modules
PNOZ mml2p

Connection terminals

Product type	Features	Order No.
Spring terminals PNOZ mml2p 1 pc.	Spring-loaded terminals, 1 piece	783 540
Spring terminals PNOZ mml2p 10 pcs.	Spring-loaded terminals, 10 pieces	783 541
Screw terminals PNOZ mml2p 1 pc.	Screw terminals, 1 piece	793 540
Screw terminals PNOZ mml2p 10 pcs.	Screw terminals, 10 pieces	793 541

Terminator, jumper

Product type	Features	Order no.
PNOZ mm0.xp connector left	Jumper yellow/black to connect the modules, 10 pieces	779 260

Connector

Product type	Features	Order No.
PSS67 M12 connector	Connector, M12, straight, 5-pin, A-coded	380 308
PSS67 M12 connector	Socket, M12, straight, 5-pin, A-coded	380 309
PSS67 M12 connector	Connector, M12, angled, 5-pin, A-coded	380 310
PSS67 M12 connector	Socket, M12, angled, 5-pin, A-coded	380 311
PSS67 M8 connector	Connector, M8, straight, 4-pin	380 316
PSS67 M8 connector	Socket, M8, straight, 4-pin	380 317
PSS67 M8 connector	Connector, M8, angled, 4-pin	380 318
PSS67 M8 connector	Socket, M8, angled, 4-pin	380 319

Communication modules
PNOZ mmc1p



Overview

Unit features

Application of the product PNOZ mmc1p:

Communication module for connection to a base unit from the configurable control systems PNOZmultiMini.

The product has the following features:

- Can be configured in the PNOZmulti Configurator
- 2 Ethernet interfaces
- Status indicators for supply voltage, communication and errors
- Max. 1 communication module can be connected to the left of the base unit PNOZmulti Mini

Communication modules
PNOZ mmc1p

Front view

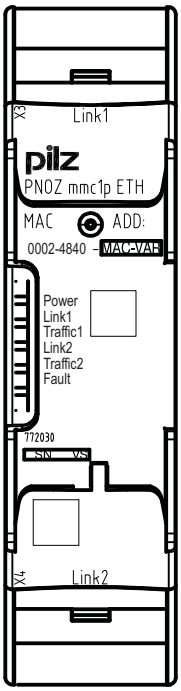

Legend:

- Link1, Link2:
  Ethernet interfaces
- LEDs:
  - Power
  - Link1
  - Traffic1
  - Link2
  - Traffic2
  - Fault

Function description

Unit properties

The product PNOZ mmc1p has two Ethernet interfaces to

- Download the project
- Read the diagnostic data

Communication modules
PNOZ mmc1p

- Set virtual inputs for standard functions
- Read virtual outputs for standard functions

via Ethernet (TCP/IP, Modbus/TCP).

Information on diagnostics via the Ethernet interfaces can be found in the document entitled " PNOZmulti Mini communication interfaces".

The connection to Ethernet is made via the two 8-pin RJ45 sockets.

The Ethernet interface is configured in the PNOZmulti Configurator and is described in the online help for the PNOZmulti Configurator.

Block diagram

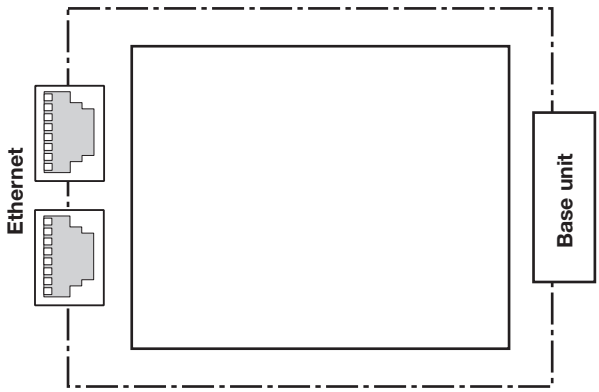

Installation

Dimensions

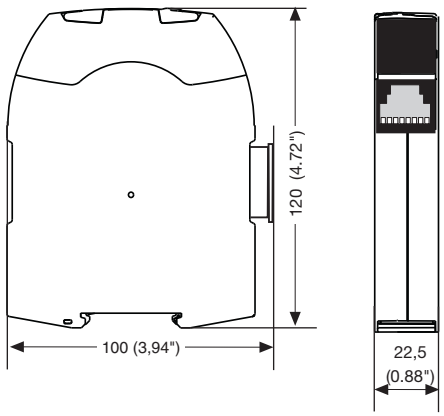

Communication modules
PNOZ mmc1p

Commissioning

General wiring guidelines

The wiring is defined in the circuit diagram of the PNOZmulti Configurator.

Please note:

- Information given in the Technical details [607] must be followed.
- The position of the expansion module is specified in the Hardware configuration of the PNOZmulti Configurator.
- Use copper wiring with a temperature stability of 75 °C.

Preparing for operation

Detection and activation of the Ethernet interface, depending on the USB interface on the base unit:

- **USB interface on the base unit not connected**

  If the USB interface on the base unit is not connected, the Ethernet interface will be detected and activated by the base unit as soon as the communication module has been connected to the base unit.
- **USB interface on the base unit connected**

  If the USB interface on the base unit is already connected, the "Ethernet" interface will first need to be selected on the base unit display to enable the Ethernet interface on the base unit to be detected and activated (see operating manual for the base unit for details of the setting).

Download modified project to the PNOZmulti safety system

As soon as an additional expansion module has been connected to the system, the project must be amended in the PNOZmulti Configurator and downloaded back into the base unit. Proceed as described in the operating manual for the base unit.

Ethernet interfaces

RJ45 interfaces ("Ethernet")

Two free switch ports are provided as Ethernet interfaces via an internal autosensing switch. The autosensing switch automatically detects whether data transfer is occurring at 10 Mbit/s or 100 Mbit/s.

The switch's automatic crossover function means there is no need to distinguish on the connection cable between patch cable (uncrossed data line connection) and crossover cable (crossover data line connection). The switch automatically creates the correct data line connection internally. Patch cable can therefore be used as the connection cable for end devices as well as cascading.

Both Ethernet interfaces use RJ45 technology.

Communication modules
PNOZ mmc1p

Requirements of the connection cable and connector

The following minimum requirements must be met:

- Ethernet standards (min. Category 5) 10BaseT or 100BaseTX
- Double-shielded twisted pair cable for industrial Ethernet use
- Shielded RJ45 connectors (industrial connectors)

Interface configuration

RJ45 socket 8-pin	PIN	Standard	Crossover
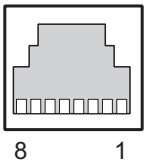	1	TD+ (Transmit+)	RD+ (Receive+)
	2	TD- (Transmit-)	RD- (Receive-)
	3	RD+ (Receive+)	TD+ (Transmit+)
	4	n.c.	n.c.
	5	n.c.	n.c.
	6	RD- (Receive-)	TD- (Transmit-)
	7	n.c.	n.c.
	8	n.c.	n.c.

RJ45 connection cable

RJ45 connector 8-pin
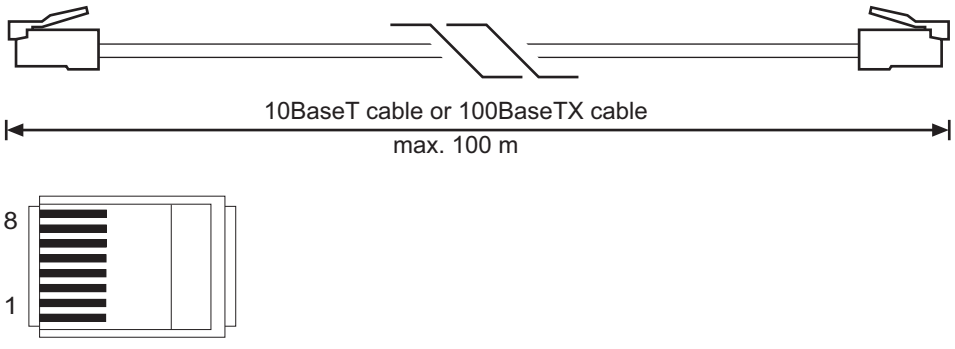

Process data exchange

The RJ45 interfaces on the internal autosensing switch enable process data to be exchanged with other Ethernet subscribers within a network.

The product PNOZ mmc1p can also be connected to Ethernet via a hub (hub or switch).

Communication modules
PNOZ mmc1p

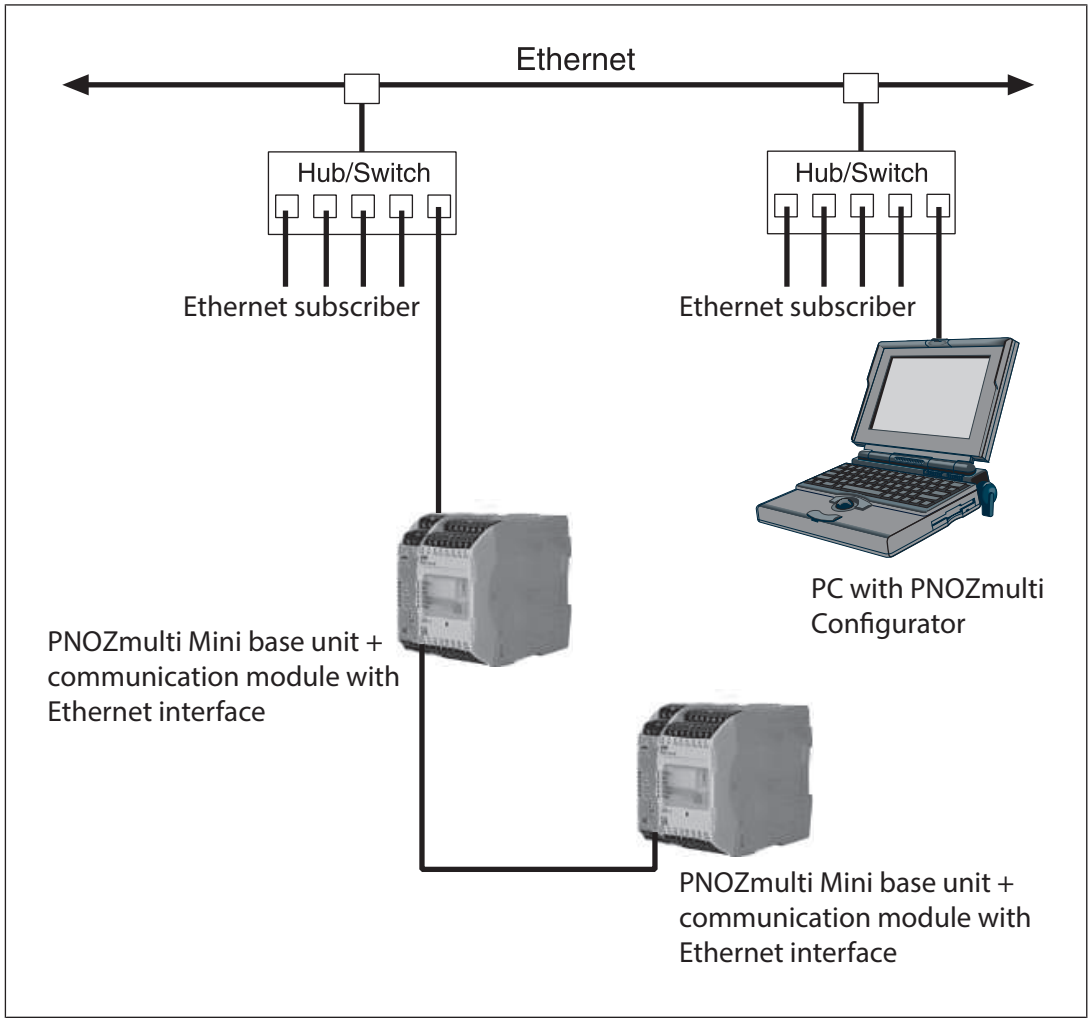

Fig.: PNOZmulti as Ethernet subscriber - possible topologies

Communication modules
PNOZ mmc1p

Technical details

General	
Certifications	**CCC, CE, EAC (Eurasian), KCC, cULus Listed**
Electrical data	
Supply voltage	
for	**Module supply**
internal	**Via base unit**
Voltage	**3,3 V**
Kind	**DC**
Voltage tolerance	**-2 %/+2 %**
Power consumption	**1,0 W**
Status indicator	**LED**
Ethernet interface	
Number	**2**
Fieldbus interface	
Fieldbus interface	**Modbus TCP**
Device type	**Slave**
Connection	**RJ45**
Galvanic isolation	**yes**
Environmental data	
Ambient temperature	
In accordance with the standard	**EN 60068-2-14**
Temperature range	**0 - 60 °C**
Storage temperature	
In accordance with the standard	**EN 60068-2-1/-2**
Temperature range	**-25 - 70 °C**
Climatic suitability	
In accordance with the standard	**EN 60068-2-30, EN 60068-2-78**
Humidity	**93 % r. h. at 40 °C**
Condensation during operation	**Not permitted**
EMC	**EN 61131-2**
Vibration	
In accordance with the standard	**EN 60068-2-6**
Frequency	**10,0 - 150,0 Hz**
Acceleration	**1g**
Shock stress	
In accordance with the standard	**EN 60068-2-27**
Acceleration	**15g**
Duration	**11 ms**
Max. operating height above sea level	**2000 m**

Communication modules
PNOZ mmc1p

Environmental data	
Airgap creepage	
Overvoltage category	**II**
Pollution degree	**2**
Rated insulation voltage	**30 V**
Protection type	
In accordance with the standard	**EN 60529**
Mounting area (e.g. control cabinet)	**IP54**
Housing	**IP20**
Terminals	**IP20**
Mechanical data	
Mounting position	**horizontally on mounting rail**
DIN rail	
Top hat rail	**35 x 7,5 EN 50022**
Recess width	**27 mm**
Max. cable length	
Max. cable length per input	**0,1 km**
Material	
Bottom	**PC**
Front	**PC**
Top	**PC**
Dimensions	
Height	**100,0 mm**
Width	**22,5 mm**
Depth	**120,0 mm**
Weight	**100 g**

Where standards are undated, the 07/2010 latest editions shall apply.

Communication modules
PNOZ mmc1p

Order reference

Product

Product type	Features	Order No.
PNOZ mmc1p ETH	Expansion module	772 030

Accessories

Terminator, jumper

Product type	Features	Order No.
PNOZ s terminator plug	Terminator, yellow, 10 pieces	750 010
PNOZ s connector	Jumper, 10 pieces	750 020

Communication modules
PNOZ mmc2p



Overview

Unit features

Application of the product PNOZ mmc2p:

Communication module for connection to a base unit from the configurable control systems PNOZmultiMini.

The product has the following features:

- Can be configured in the PNOZmulti Configurator
- 1 serial interface RS232
- Status indicator for supply voltage
- Max. 1 communication module can be connected to the left of the base unit PNOZmulti Mini
- Plug-in connection terminals (either cage clamp terminals or screw terminals)

Communication modules
PNOZ mmc2p

Front view

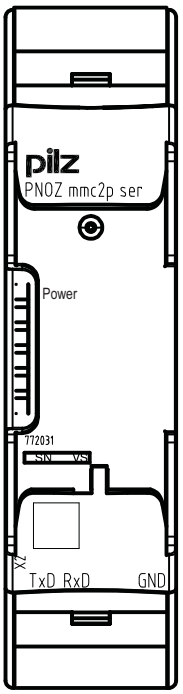

Legend:

- X2: Serial interface RS232
- LED:
  - Power

Function description

Functions

The product PNOZ mmc2p has a serial interface RS232 interface to

- Download the project
- Read the diagnostic data
- Set virtual inputs for standard functions
- Read virtual outputs for standard functions.

Information on diagnostics can be found in the document "Communication Interfaces".

Communication modules
PNOZ mmc2p

Block diagram

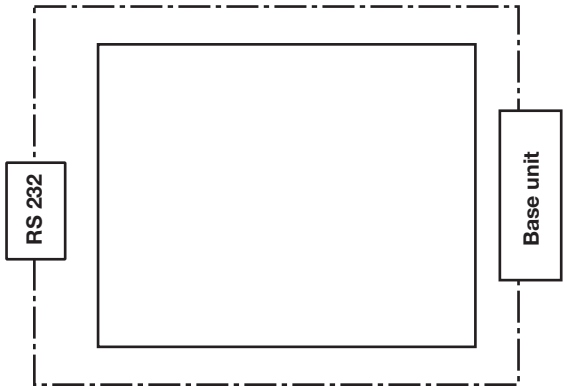

Installation

Dimensions

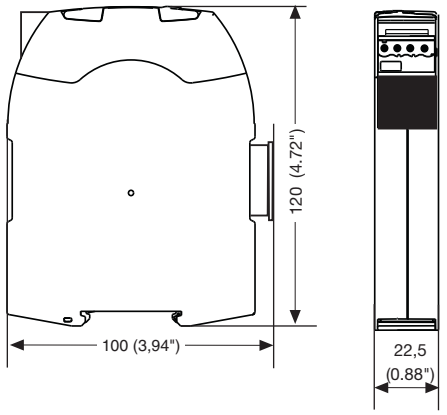

Commissioning

General wiring guidelines

The wiring is defined in the circuit diagram of the PNOZmulti Configurator.

Please note:

- Information given in the Technical details [📖 613] must be followed.
- The position of the expansion module is specified in the Hardware configuration of the PNOZmulti Configurator.

Communication modules
PNOZ mmc2p

- Use copper wiring with a temperature stability of 75 °C.

Interface configuration

Serial interface RS232	Standard
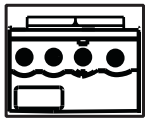 TxD RxD GND	TxD (Transmit)
	RxD (Receive)
	GND (Ground)

Preparing for operation

The serial interface RS 232 is activated and detected depending on the USB interface on the base unit:

- **USB interface on the base unit not connected**

  In this case, the serial interface RS 232 will be detected and activated by the base unit as soon as the communication module has been connected to the base unit.

- **USB interface on the base unit connected**

  If the USB interface on the base unit is already connected, the "External" interface will first need to be selected on the base unit display to enable the serial interface RS 232 on the base unit to be detected and activated (see operating manual for the base unit for details of the setting).

Technical details

General	
Certifications	**CCC, CE, EAC (Eurasian), KCC, cULus Listed**
Electrical data	
Supply voltage	
for	**Module supply**
internal	**Via base unit**
Voltage	**3,3 V**
Kind	**DC**
Voltage tolerance	**-2 %/+2 %**
Power consumption	**30,0 mW**
Status indicator	**LED**
Fieldbus interface	
Galvanic isolation	**No**
Serial interface	
Number of RS232 interfaces	**1**

Communication modules
PNOZ mmc2p

Environmental data	
Ambient temperature	
In accordance with the standard	**EN 60068-2-14**
Temperature range	**0 - 60 °C**
Storage temperature	
In accordance with the standard	**EN 60068-2-1/-2**
Temperature range	**-25 - 70 °C**
Climatic suitability	
In accordance with the standard	**EN 60068-2-30, EN 60068-2-78**
Humidity	**93 % r. h. at 40 °C**
Condensation during operation	**Not permitted**
EMC	**EN 61131-2**
Vibration	
In accordance with the standard	**EN 60068-2-6**
Frequency	**10,0 - 150,0 Hz**
Acceleration	**1g**
Shock stress	
In accordance with the standard	**EN 60068-2-27**
Acceleration	**15g**
Duration	**11 ms**
Max. operating height above sea level	**2000 m**
Airgap creepage	
Overvoltage category	**II**
Pollution degree	**2**
Rated insulation voltage	**30 V**
Protection type	
In accordance with the standard	**EN 60529**
Mounting area (e.g. control cabinet)	**IP54**
Housing	**IP20**
Terminals	**IP20**
Mechanical data	
Mounting position	**horizontally on mounting rail**
DIN rail	
Top hat rail	**35 x 7,5 EN 50022**
Recess width	**27 mm**
Max. cable length	
Max. cable length per input	**22,0 m**
Material	
Bottom	**PC**
Front	**PC**
Top	**PC**
Connection type	**Spring-loaded terminal, screw terminal**

Communication modules
PNOZ mmc2p

Mechanical data	
Conductor cross section with screw terminals	
1 core flexible	**0,50 - 1,50 mm², 22 - 12 AWG**
2 core with the same cross section, flexible without crimp connectors or with TWIN crimp connectors	**0,20 - 1,50 mm², 24 - 16 AWG**
Torque setting with screw terminals	**0,50 Nm**
Conductor cross section with spring-loaded terminals: Flexible with/without crimp connector	**0,20 - 2,50 mm², 24 - 12 AWG**
Spring-loaded terminals: Terminal points per connection	**2**
Stripping length with spring-loaded terminals	**9 mm**
Dimensions	
Height	**100,0 mm**
Width	**22,5 mm**
Depth	**120,0 mm**
Weight	**85 g**

Where standards are undated, the 07/2010 latest editions shall apply.

Order reference

Product

Product type	Features	Order No.
PNOZ mmc2p serial	Expansion module	772 031

Accessories

Connection terminals

Product type	Features	Order no.
Spring terminals PNOZ mmc2p, mml1p 1 pc.	Spring-loaded terminals, 1 piece	783 538
Spring terminals PNOZ mmc2p,mml1p 10 pcs	Spring-loaded terminals, 10 pieces	783 539
Screw terminals PNOZ mmc2p, mml1p 1 pc.	Screw terminals, 1 piece	793 538
Screw terminals PNOZ mmc2p,mml1p 10 pcs.	Screw terminals, 10 piece	793 539

Communication modules
PNOZ mmc2p

Terminator, jumper

Product type	Features	Order No.
PNOZ s terminator plug	Terminator, yellow, 10 pieces	750 010
PNOZ s connector	Jumper, 10 pieces	750 020

Fieldbus modules
PNOZ mmc3p



Overview

Unit features

Application of the product PNOZ mmc3p:

Expansion module for connection to a base unit from the configurable control system PNOZmulti Mini

The product has the following features:

- Can be configured in the PNOZmulti Configurator
- Connection for PROFIBUS-DP
- Station addresses from 0 ... 99, selected via rotary switch
- Status indicators for communication with PROFIBUS-DP and for errors
- 24 virtual inputs and outputs on the control system PNOZmulti can be defined in the PNOZmulti Configurator for communication with the fieldbus PROFIBUS-DP . The number of inputs and outputs can be extended to 128. Please note that when the extended inputs and outputs 24 - 127 are used they have different properties (see document entitled "Communication Interfaces").
- Max. 1 PNOZ mmc3p can be connected to the base unit
- Plug-in connection terminals:
  Either spring-loaded terminal or screw terminal available as an accessory (see Order references for accessories [📖 772]).
- Please refer to the document "PNOZmulti System Expansion" for details of the base units PNOZmulti Mini that can be connected.

Fieldbus modules
PNOZ mmc3p

Front view

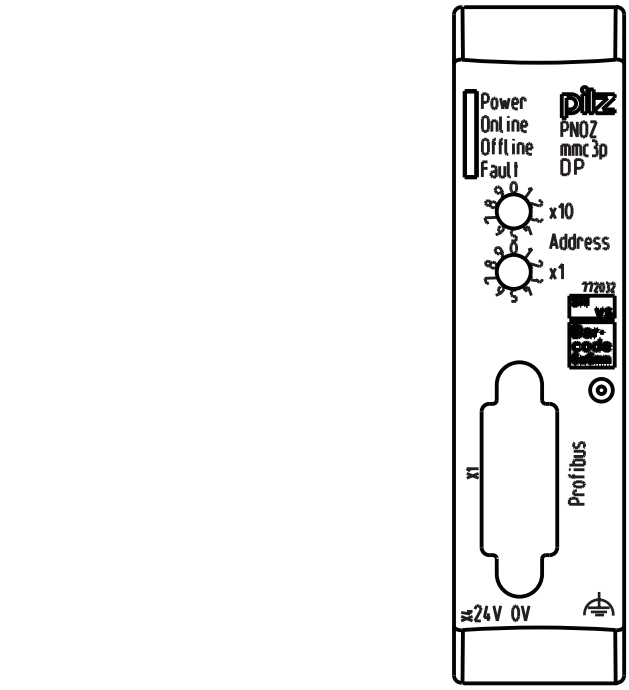

Legend:

- 0 V, 24 V:
  Supply connections
- X1: PROFIBUS-DP interface (female 9-pin D-Sub connector)
- ⏚: Functional earth
- LED:
  - Power
  - Online
  - Offline
  - Fault

Function description

Operation

The virtual inputs and outputs that are to be transferred via PROFIBUS are selected and configured in the PNOZmulti Configurator. The base unit and the expansion module PNOZ mmc3p are connected via a jumper.

Fieldbus modules
PNOZ mmc3p

The station address is set via rotary switches. After the supply voltage is switched on or the PNOZmulti control system is reset, the expansion module PNOZ mmc3p is configured and started automatically.

LEDs indicate the status of the expansion module on PROFIBUS.

The configuration is described in detail in the PNOZmulti Configurator's online help.

Input and output data

The data is structured as follows:

- Input area

  The inputs are defined in the master and transferred to the PNOZmulti. Each input has a number, e.g. input bit 4 of byte 1 has the number i12.

- Output range

  The outputs are defined in the PNOZmulti Configurator. Each output that is used is given a number there, e.g. o0, o5... The status of output o0 is stored in bit 0 of byte 0; the status of output o5 is stored in bit 5 of byte 0 etc.

- Output range only: Byte 3

  Bits 0 … 4: Status of LEDs on the PNOZmulti

  – Bit 0: OFAULT
  – Bit 1: IFAULT
  – Bit 2: FAULT
  – Bit 3: DIAG
  – Bit 4: RUN

  Bit 5: Data is being exchanged.

Detailed information on data exchange (tables, segments) is available in the document "Communication Interfaces" in the section entitled "Fieldbus modules".

Assigning the inputs/outputs in the PNOZmulti Configurator to the PROFIBUS-DP inputs/outputs

Virtual inputs on PNOZmulti Configurator	i0 ... I7	i8 ... i15	i16 ... i23
Input data PROFIBUS-DP	Byte 0: Bits 0 … 7	Byte 1: Bits 0 … 7	Byte 2: Bits 0 … 7
Virtual outputs on PNOZmulti Configurator	o0 ... o7	o8 ... o15	o16 ... o23
Output data PROFIBUS-DP	Byte 0: Bits 0 … 7	Byte 1: Bits 0 … 7	Byte 2: Bits 0 … 7

The number of virtual inputs and outputs can be extended to 128 (see document "Communication Interfaces" in the section entitled "Fieldbus modules")

Fieldbus modules
PNOZ mmc3p

Block diagram

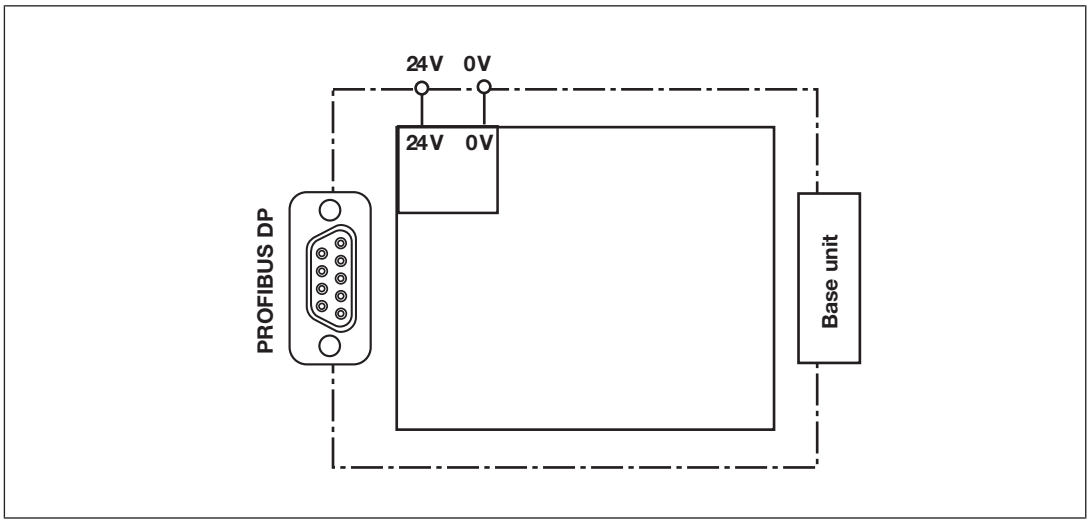

Installation

Dimensions in mm

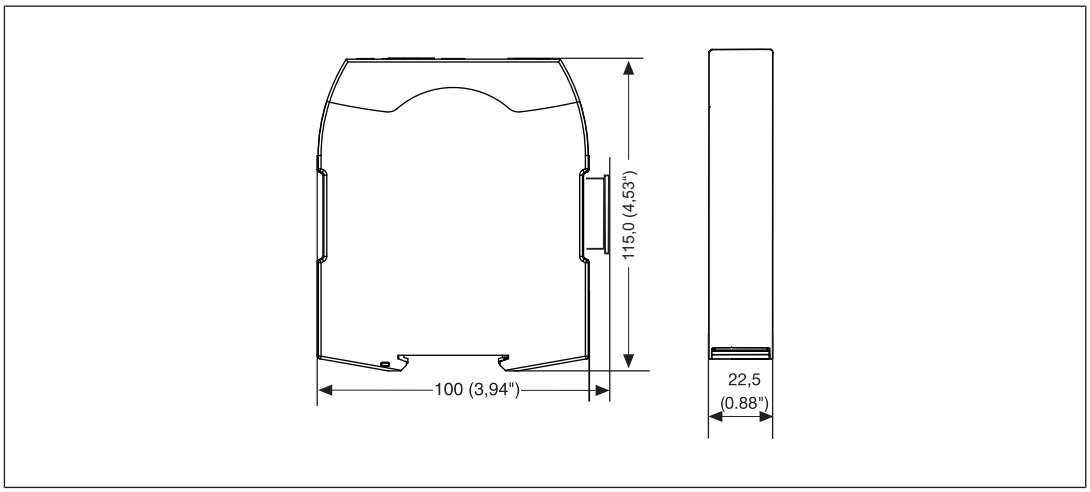

Commissioning

General wiring guidelines

The wiring is defined in the circuit diagram of the PNOZmulti Configurator.

Please note:

- Information given in the Technical details [📖 633] must be followed.
- The position of the expansion module is specified in the Hardware configuration of the PNOZmulti Configurator.

Fieldbus modules
PNOZ mmc3p

- Use copper wiring with a temperature stability of 75 °C.
- External measures must be used to connect the ⏚ terminal to the function earth (e.g. mounting rail).
- Always connect the mounting rail to the protective earth via an earthing terminal. This will be used to dissipate hazardous voltages in the case of a fault.
- The power supply must meet the regulations for extra low voltages with protective electrical separation (SELV, PELV).

Connecting the supply voltage

Connect the supply voltage to the fieldbus module:

- **24 V** terminal: + 24 VDC
- **0 V** terminal: 0 V
- Protect the supply voltage as follows:
  - Circuit breaker, characteristic C - 6 A

    or
  - Blow-out fuse, slow, 6A

PROFIBUS DP interface

It is possible to define which outputs on the control system will communicate with PROFIBUS-DP. The connection to PROFIBUS-DP is made via a female 9-pin D-Sub connector in accordance with the guidelines of the PROFIBUS User Group (PNO).

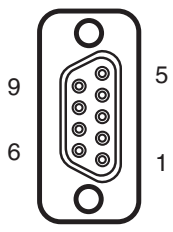

1: n.c.
2: n.c.
3: B (RxD/TxD-P)
4: CNTR-P
5: DGND
6: VP
7: n.c.
8: A (RxD/TxD-N)
9: n.c.

n.c. = not connected

Please note the following when connecting to PROFIBUS-DP:

- Only use metal plugs or metallised plastic plugs
- Twisted pair, screened cable must be used to connect the interfaces

Fieldbus modules
PNOZ mmc3p

Setting the station address

The station address of the expansion module PNOZ mmc3p is set between 0 ... 99 (decimal) via two rotary switches x1 and x10.

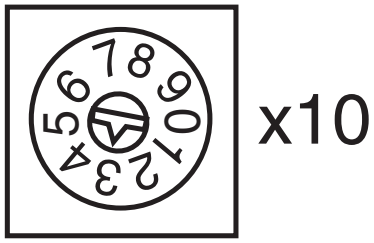

- On the upper rotary switch x10, use a small screwdriver to set the tens digit for the address (“3” in the example).

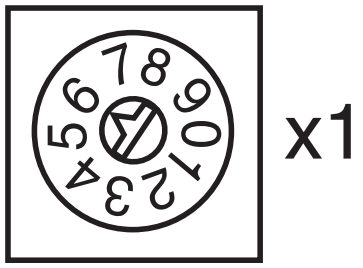

- On the lower rotary switch x1, set the ones digit for the address (“6” in the example).

Station address 36 is set in the diagrams as an example.

Download modified project to the control system PNOZmulti

As soon as an additional expansion module has been connected to the system, the project must be amended in the PNOZmulti Configurator and downloaded back into the base unit. Proceed as described in the operating manual for the base unit.

Fieldbus modules
PNOZ mmc3p

Connection example

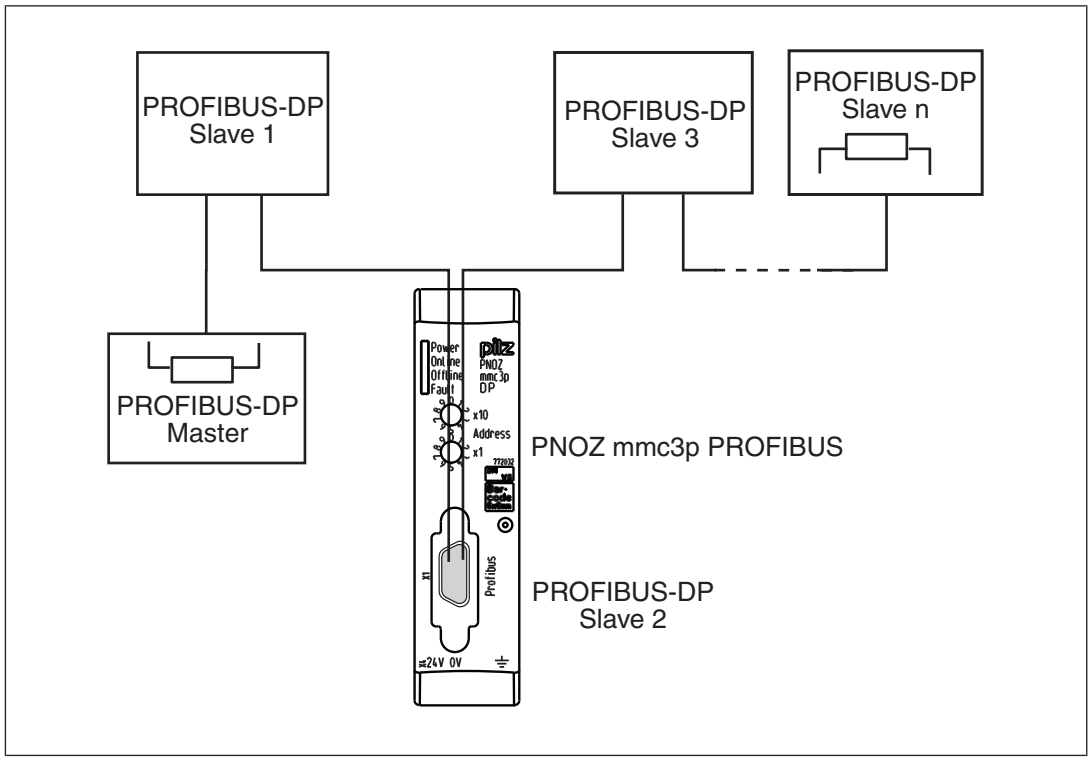

Technical details

General	
Certifications	**CCC, CE, EAC (Eurasian), cULus Listed**
Electrical data	
Supply voltage	
for	**Module supply**
Voltage	**24 V**
Kind	**DC**
Voltage tolerance	**-20 %/+25 %**
Output of external power supply (DC)	**1,5 W**
Status indicator	**LED**
Fieldbus interface	
Fieldbus interface	**PROFIBUS DP**
Device type	**Slave DPV0**
Station address	**0 - 99d**
Transmission rate	**9,6 kBit/s - 12 MBit/s**
Connection	**9-pin D-Sub female connector**
Galvanic isolation	**yes**

Fieldbus modules
PNOZ mmc3p

Times	
Supply interruption before de-energisation	**20 ms**
Environmental data	
Ambient temperature	
In accordance with the standard	**EN 60068-2-14**
Temperature range	**0 - 60 °C**
Forced convection in control cabinet off	**55 °C**
Storage temperature	
In accordance with the standard	**EN 60068-2-1/-2**
Temperature range	**-25 - 70 °C**
Climatic suitability	
In accordance with the standard	**EN 60068-2-30, EN 60068-2-78**
Humidity	**93 % r. h. at 40 °C**
Condensation during operation	**Not permitted**
EMC	**EN 61131-2**
Vibration	
In accordance with the standard	**EN 60068-2-6**
Frequency	**10,0 - 150,0 Hz**
Acceleration	**1g**
Shock stress	
In accordance with the standard	**EN 60068-2-27**
Acceleration	**15g**
Duration	**11 ms**
Max. operating height above sea level	**2000 m**
Airgap creepage	
In accordance with the standard	**EN 61131-2**
Overvoltage category	**II**
Pollution degree	**2**
Rated insulation voltage	**30 V**
Protection type	
In accordance with the standard	**EN 60529**
Mounting area (e.g. control cabinet)	**IP54**
Housing	**IP20**
Terminals	**IP20**
Potential isolation	
Potential isolation between	**Fieldbus and module voltage**
Type of potential isolation	**Functional insulation**
Rated surge voltage	**500 V**
Mechanical data	
Mounting position	**horizontally on mounting rail**

Fieldbus modules
PNOZ mmc3p

Mechanical data	
DIN rail	
Top hat rail	**35 x 7,5 EN 50022**
Recess width	**27 mm**
Material	
Bottom	**PC**
Front	**PC**
Top	**PC**
Connection type	**Spring-loaded terminal, screw terminal**
Conductor cross section with screw terminals	
1 core flexible	**0,25 - 2,50 mm², 24 - 12 AWG**
2 core with the same cross section, flexible with crimp connectors, no plastic sleeve	**0,20 - 1,50 mm², 24 - 16 AWG**
2 core with the same cross section, flexible without crimp connectors or with TWIN crimp connectors	**0,20 - 1,50 mm², 24 - 16 AWG**
Torque setting with screw terminals	**0,50 Nm**
Conductor cross section with spring-loaded terminals: Flexible with/without crimp connector	**0,20 - 2,50 mm², 24 - 12 AWG**
Spring-loaded terminals: Terminal points per connection	**2**
Stripping length with spring-loaded terminals	**9 mm**
Dimensions	
Height	**100,0 mm**
Width	**22,5 mm**
Depth	**115,0 mm**
Weight	**95 g**

Where standards are undated, the 2011-09 latest editions shall apply.

Fieldbus modules
PNOZ mmc3p

Order reference

Product

Product type	Features	Order no.
PNOZ mmc3p	Fieldbus module, PROFIBUS-DP	772 032

Accessories

Connection terminals

Product type	Features	Order no.
Spring terminals PNOZ mmcxp 1 pc.	Spring-loaded terminals, 1 piece	783 542
Spring terminals PNOZ mmcxp 10 pcs.	Spring-loaded terminals, 10 pieces	783 543
Screw terminals PNOZ mmcxp 1 pc.	Screw terminals, 1 piece	793 542
Screw terminals PNOZ mmcxp 10 pcs.	Screw terminals, 10 pieces	793 543

Terminator, jumper

Product type	Features	Order No.
PNOZ s terminator plug	Terminator, yellow, 10 pieces	750 010
PNOZ s connector	Jumper, 10 pieces	750 020

Fieldbus modules
PNOZ mmc4p



Overview

Unit features

Application of the product PNOZ mmc4p:

Expansion module for connection to a base unit from the PNOZmulti Mini system.

The product has the following features:

- Can be configured in the PNOZmulti Configurator
- Connection for DeviceNet
- Station addresses from 0 ... 63 can be selected via DIP switches
- Status indicators for communication with DeviceNet and for errors
- 24 virtual inputs and outputs on the control system PNOZmulti can be defined in the PNOZmulti Configurator for communication with the fieldbus DeviceNet . The number of inputs and outputs can be extended to 128. Please note that when the extended inputs and outputs 24 - 127 are used they have different properties (see document entitled "Communication Interfaces").
- Max. 1 PNOZ mmc4p can be connected to the base unit
- Plug-in connection terminals:
  Either spring-loaded terminal or screw terminal available as an accessory (see Order references for accessories [📖 772]).
- Please refer to the document "PNOZmulti System Expansion" for details of the base units PNOZmulti Mini that can be connected.

Fieldbus modules
PNOZ mmc4p

Front view

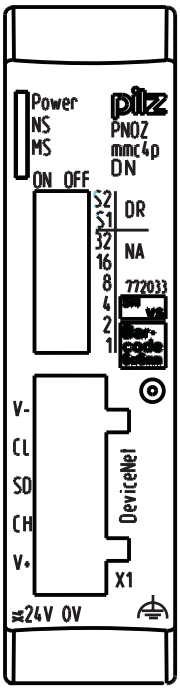

Legend:

- 0 V, 24 V:
  Supply connections
- X1: DeviceNet interface (5-pin screw connector)
- ⏚: Functional earth
- LED:
  - Power
  - NS
  - MS

Fieldbus modules
PNOZ mmc4p

Function description

Operation

The virtual inputs and outputs that are to be transferred via DeviceNet are selected and configured in the PNOZmulti Configurator. The base unit and the expansion module PNOZ mmc4p are connected via a jumper.

The station address and the transmission rate are set using DIP switches. After the supply voltage is switched on or the PNOZmulti control system is reset, the expansion module PNOZ mmc4p is configured and started automatically.

LEDs indicate the status of the expansion module on DeviceNet.

The configuration is described in detail in the PNOZmulti Configurator's online help.

Input and output data

The data is structured as follows:

- Input area

  The inputs are defined in the master and transferred to the PNOZmulti. Each input has a number, e.g. input bit 4 of byte 1 has the number i12.

- Output range

  The outputs are defined in the PNOZmulti Configurator. Each output that is used is given a number there, e.g. o0, o5... The status of output o0 is stored in bit 0 of byte 0; the status of output o5 is stored in bit 5 of byte 0 etc.

- Output range only: Byte 3

  Bits 0 … 4: Status of LEDs on the PNOZmulti

  – Bit 0: OFAULT
  – Bit 1: IFAULT
  – Bit 2: FAULT
  – Bit 3: DIAG
  – Bit 4: RUN

  Bit 5: Data is being exchanged.

Detailed information on data exchange (tables, segments) is available in the document "Communication Interfaces" in the section entitled "Fieldbus modules".

Assigning the inputs/outputs in the PNOZmulti Configurator to the DeviceNet inputs/outputs

Virtual inputs on PNOZmulti Configurator	i0 ... I7	i8 ... i15	i16 ... i23
Input data DeviceNet	Byte 0: Bits 0 … 7	Byte 1: Bits 0 … 7	Byte 2: Bits 0 … 7
Virtual outputs on PNOZmulti Configurator	o0 ... o7	o8 ... o15	o16 ... o23

Fieldbus modules
PNOZ mmc4p

Output data DeviceNet	Byte 0: Bits 0 … 7	Byte 1: Bits 0 … 7	Byte 2: Bits 0 … 7

The number of virtual inputs and outputs can be extended to 128 (see document "Communication Interfaces" in the section entitled "Fieldbus modules")

Block diagram

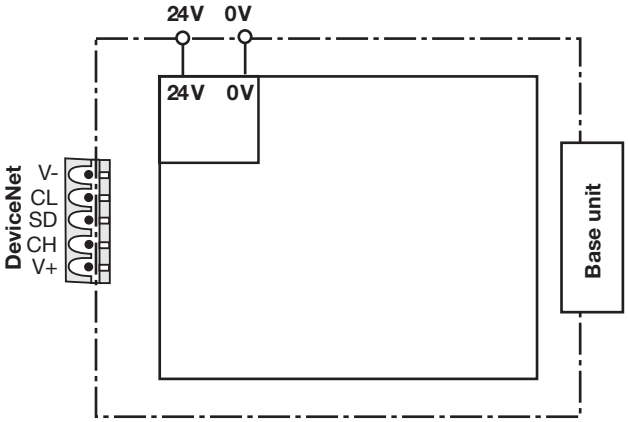

Installation

Dimensions in mm

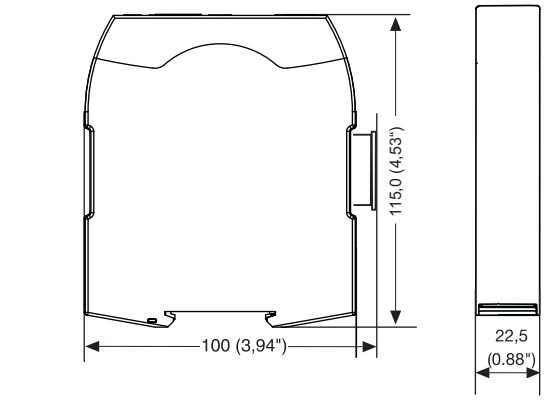

Fieldbus modules
PNOZ mmc4p

Commissioning

General wiring guidelines

The wiring is defined in the circuit diagram of the PNOZmulti Configurator.

Please note:

- Information given in the Technical details [633] must be followed.
- The position of the expansion module is specified in the Hardware configuration of the PNOZmulti Configurator.
- Use copper wiring with a temperature stability of 75 °C.
- External measures must be used to connect the ⏚ terminal to the function earth (e.g. mounting rail).
- Always connect the mounting rail to the protective earth via an earthing terminal. This will be used to dissipate hazardous voltages in the case of a fault.
- The power supply must meet the regulations for extra low voltages with protective electrical separation (SELV, PELV).

Connecting the supply voltage

Connect the supply voltage to the fieldbus module:

- **24 V** terminal: + 24 VDC
- **0 V** terminal: 0 V
- Protect the supply voltage as follows:
  - Circuit breaker, characteristic C - 6 A

    or
  - Blow-out fuse, slow, 6A

DeviceNet interface

It is possible to define which outputs on the control system will communicate with DeviceNet. The connection to DeviceNet is made via a 5-pin screw connector.

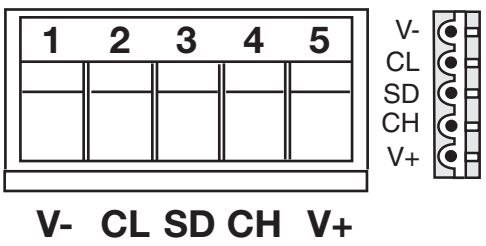

1: V-
2: CL (CAN_L)
3: Cable screening
4: CH (CAN_H)
5: V+

Fieldbus modules
PNOZ mmc4p

Termination DeviceNet

To minimise cable reflection and to guarantee a defined rest signal on the transmission line, DeviceNetmust be terminated at both ends.

Setting the transmission rate

Set the transmission rate using DIP switches S1 and S2 (DR).

Transmission rate	DIP switch	
	S1	S2
125 kBit/s	Off	Off
250 kBit/s	On	Off
500 kBit/s	Off	On
---	On	On

Setting the station address

The station address of the expansion module PNOZ mmc4p is set from 0 ... 63 (binary) using DIP switches 1 to 32.

Station address	**DIP switch**					
	32	**16**	**8**	**4**	**2**	**1**
0	Off	Off	Off	Off	Off	Off
1	Off	Off	Off	Off	Off	On
2	Off	Off	Off	Off	On	Off
3	Off	Off	Off	Off	On	On
...	...	...	...	...	...	...
62	On	On	On	On	On	Off
63	On	On	On	On	On	On

Download modified project to the PNOZmulti safety system

As soon as an additional expansion module has been connected to the system, the project must be amended in the PNOZmulti Configurator and downloaded back into the base unit. Proceed as described in the operating manual for the base unit.

Fieldbus modules
PNOZ mmc4p

Connection example

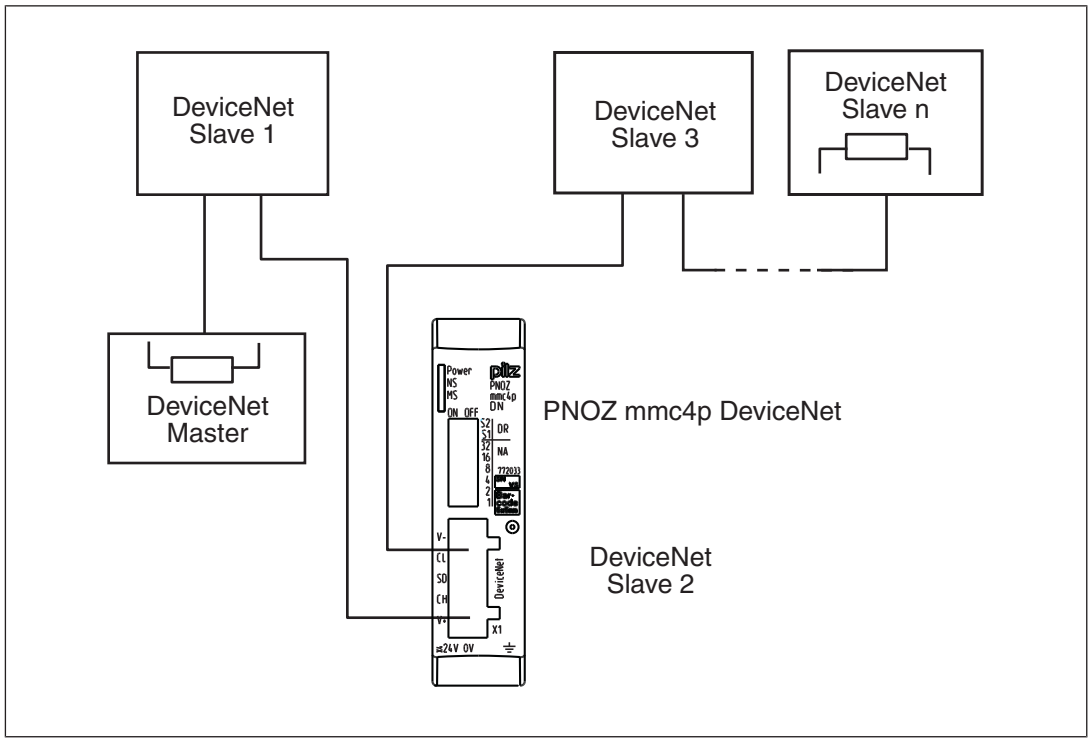

Technical details

General	
Certifications	**CCC, CE, EAC (Eurasian), cULus Listed**
Electrical data	
Supply voltage	
for	**Module supply**
Voltage	**24 V**
Kind	**DC**
Voltage tolerance	**-20 %/+25 %**
Output of external power supply (DC)	**1,5 W**
Status indicator	**LED**
Fieldbus interface	
Fieldbus interface	**DeviceNet**
External supply (DC)	**24 V**
Power consumption	**0,75 W**
Device type	**Slave**
Station address	**0 ... 63d**
Transmission rates	**125 kBit/s, 250 kBit/s, 500 kBit/s**
Connection	**5-pin Combicon plug-in connector**

Fieldbus modules
PNOZ mmc4p

Fieldbus interface	
Galvanic isolation	**yes**
Times	
Supply interruption before de-energisation	**20 ms**
Environmental data	
Ambient temperature	
In accordance with the standard	**EN 60068-2-14**
Temperature range	**0 - 60 °C**
Forced convection in control cabinet off	**55 °C**
Storage temperature	
In accordance with the standard	**EN 60068-2-1/-2**
Temperature range	**-25 - 70 °C**
Climatic suitability	
In accordance with the standard	**EN 60068-2-30, EN 60068-2-78**
Humidity	**93 % r. h. at 40 °C**
Condensation during operation	**Not permitted**
EMC	**EN 61131-2**
Vibration	
In accordance with the standard	**EN 60068-2-6**
Frequency	**10,0 - 150,0 Hz**
Acceleration	**1g**
Shock stress	
In accordance with the standard	**EN 60068-2-27**
Acceleration	**15g**
Duration	**11 ms**
Max. operating height above sea level	**2000 m**
Airgap creepage	
In accordance with the standard	**EN 61131-2**
Overvoltage category	**II**
Pollution degree	**2**
Rated insulation voltage	**30 V**
Protection type	
In accordance with the standard	**EN 60529**
Mounting area (e.g. control cabinet)	**IP54**
Housing	**IP20**
Terminals	**IP20**
Potential isolation	
Potential isolation between	**Fieldbus and module voltage**
Type of potential isolation	**Functional insulation**
Rated surge voltage	**500 V**

Fieldbus modules
PNOZ mmc4p

Mechanical data	
Mounting position	**horizontally on mounting rail**
DIN rail	
Top hat rail	**35 x 7,5 EN 50022**
Recess width	**27 mm**
Material	
Bottom	**PC**
Front	**PC**
Top	**PC**
Connection type	**Spring-loaded terminal, screw terminal**
Conductor cross section with screw terminals	
1 core flexible	**0,25 - 2,50 mm², 24 - 12 AWG**
2 core with the same cross section, flexible with crimp connectors, no plastic sleeve	**0,20 - 1,50 mm², 24 - 16 AWG**
2 core with the same cross section, flexible without crimp connectors or with TWIN crimp connectors	**0,20 - 1,50 mm², 24 - 16 AWG**
Torque setting with screw terminals	**0,50 Nm**
Conductor cross section with spring-loaded terminals: Flexible with/without crimp connector	**0,20 - 2,50 mm², 24 - 12 AWG**
Spring-loaded terminals: Terminal points per connection	**2**
Stripping length with spring-loaded terminals	**9 mm**
Dimensions	
Height	**100,0 mm**
Width	**22,5 mm**
Depth	**110,0 mm**
Weight	**95 g**

Where standards are undated, the 2011-09 latest editions shall apply.

Fieldbus modules
PNOZ mmc4p

Order reference

Product

Product type	Features	Order no.
PNOZ mmc4p	Fieldbus module, DeviceNet	772 033

Accessories

Connection terminals

Product type	Features	Order no.
Spring terminals PNOZ mmcxp 1 pc.	Spring-loaded terminals, 1 piece	783 542
Spring terminals PNOZ mmcxp 10 pcs.	Spring-loaded terminals, 10 pieces	783 543
Screw terminals PNOZ mmcxp 1 pc.	Screw terminals, 1 piece	793 542
Screw terminals PNOZ mmcxp 10 pcs.	Screw terminals, 10 pieces	793 543

Terminator, jumper

Product type	Features	Order No.
PNOZ s terminator plug	Terminator, yellow, 10 pieces	750 010
PNOZ s connector	Jumper, 10 pieces	750 020

Fieldbus modules
PNOZ mmc6p



Overview

Unit features

Application of the product PNOZ mmc6p:

Expansion module for connection to a base unit from the configurable control system PNOZmulti Mini

The product has the following features:

- Can be configured in the PNOZmulti Configurator
- Connection for CANopen
- Station addresses from 0 ... 99, selected via rotary switch
- Transmission rate selected via rotary switch (1 MBit/s, 10 kbit/s, 125 kBit/s, 20 kbit/s, 250 kBit/s, 50 kbit/s, 500 kBit/s, 800 kbit/s)
- Status indicators for communication with CANopen and for errors
- 24 virtual inputs and outputs on the control system PNOZmulti can be defined in the PNOZmulti Configurator for communication with the fieldbus CANopen . The number of inputs and outputs can be extended to 128. Please note that when the extended inputs and outputs 24 - 127 are used they have different properties (see document entitled "Communication Interfaces").
- Max. 1 PNOZ mmc6p can be connected to the base unit
- Plug-in connection terminals:
  Either spring-loaded terminal or screw terminal available as an accessory (see Order references for accessories [📖 772]).
- Please refer to the document "PNOZmulti System Expansion" for details of the base units PNOZmulti Mini that can be connected.

Fieldbus modules
PNOZ mmc6p

Front view

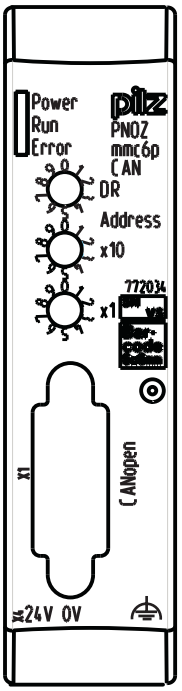

Legend:

- X4: 0 V, 24 V:
  Supply connections
- X1: CANopen interface (male 9-pin D-Sub connector)
- ⏚: Functional earth
- LED:
  - Power
  - Run
  - Error

Function description

Operation

The virtual inputs and outputs that are to be transferred via CANopen are selected and configured in the PNOZmulti Configurator. The base unit and the expansion module PNOZ mmc6p are connected via a jumper. The station address and the transmission rate are set using rotary switches. After the supply voltage is switched on or the PNOZmulti control system is reset, the expansion module PNOZ mmc6p is configured and started automatically.

Fieldbus modules
PNOZ mmc6p

LEDs indicate the status of the expansion module on CANopen.

The configuration is described in detail in the PNOZmulti Configurator's online help.

Input and output data

The data is structured as follows:

- Input area

  The inputs are defined in the master and transferred to the PNOZmulti. Each input has a number, e.g. input bit 4 of byte 1 has the number i12.

- Output range

  The outputs are defined in the PNOZmulti Configurator. Each output that is used is given a number there, e.g. o0, o5... The status of output o0 is stored in bit 0 of byte 0; the status of output o5 is stored in bit 5 of byte 0 etc.

- Output range only: Byte 3

  Bits 0 … 4: Status of LEDs on the PNOZmulti

  – Bit 0: OFAULT
  – Bit 1: IFAULT
  – Bit 2: FAULT
  – Bit 3: DIAG
  – Bit 4: RUN

  Bit 5: Data is being exchanged.

Detailed information on data exchange (tables, segments) is available in the document "Communication Interfaces" in the section entitled "Fieldbus modules".

Assigning the inputs/outputs in the PNOZmulti Configurator to the CANopen inputs/outputs

Virtual inputs on PNOZmulti Configurator	i0 ... I7	i8 ... i15	i16 ... i23
Input data CANopen	Byte 0: Bits 0 … 7	Byte 1: Bits 0 … 7	Byte 2: Bits 0 … 7
Virtual outputs on PNOZmulti Configurator	o0 ... o7	o8 ... o15	o16 ... o23
Output data CANopen	Byte 0: Bits 0 … 7	Byte 1: Bits 0 … 7	Byte 2: Bits 0 … 7

The number of virtual inputs and outputs can be extended to 128 (see document "Communication Interfaces" in the section entitled "Fieldbus modules")

Fieldbus modules
PNOZ mmc6p

Block diagram

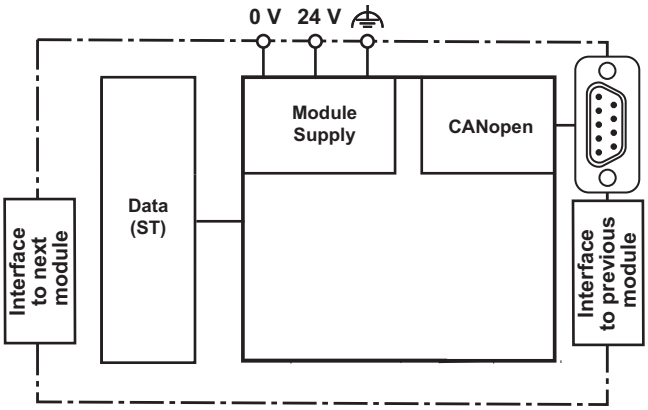

Installation

Dimensions in mm

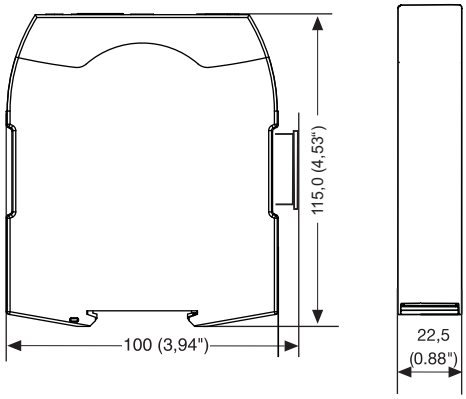

Commissioning

General wiring guidelines

The wiring is defined in the circuit diagram of the PNOZmulti Configurator.

Please note:

- Information given in the Technical details [📖 643] must be followed.
- The position of the expansion module is specified in the Hardware configuration of the PNOZmulti Configurator.

Fieldbus modules
PNOZ mmc6p

- Use copper wiring with a temperature stability of 75 °C.
- External measures must be used to connect the ⏚ terminal to the function earth (e.g. mounting rail).
- Always connect the mounting rail to the protective earth via an earthing terminal. This will be used to dissipate hazardous voltages in the case of a fault.
- The power supply must meet the regulations for extra low voltages with protective electrical separation (SELV, PELV).

Connecting the supply voltage

Connect the supply voltage to the fieldbus module:

- **24 V** terminal: + 24 VDC
- **0 V** terminal: 0 V
- Protect the supply voltage as follows:
  - Circuit breaker, characteristic C - 6 A

    or
  - Blow-out fuse, slow, 6A

CANopen interface

The connection to CANopen is made via a male 9-pin D-Sub connector.

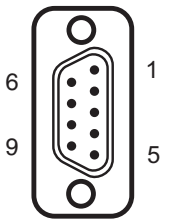

1: n.c.
2: CAN_L
3: CAN_GND
4: n.c.
5: CAN_SHLD
6: n.c.
7: CAN_H
8: n.c.
9: n.c.

n.c. = not connected

Please note the following when connecting to CANopen:

- Only use metal plugs or metallised plastic plugs
- Twisted pair, screened cable must be used to connect the interfaces

CANopen termination

To minimise cable reflection and to guarantee a defined rest signal on the transmission line, CANopen must be terminated at both ends.

Fieldbus modules
PNOZ mmc6p

Setting the transmission rate

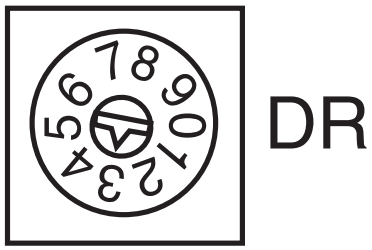

- On the upper rotary switch DR, use a small screwdriver to set the transmission rate (in the example, "3" corresponds to 50 kBit/s).

Switch setting	0	1	2	3	4	5	6	7	8	9
Transmission rate	-	10 kBit/s	20 kBit/s	50 kBit/s	125 kBit/s	250 kBit/s	500 kBit/s	800 kBit/s	1 MBit/s	-

Setting the station address

The station address of the expansion module PNOZ mmc6p is set between 0 ... 99 (decimal) via two rotary switches x1 and x10.

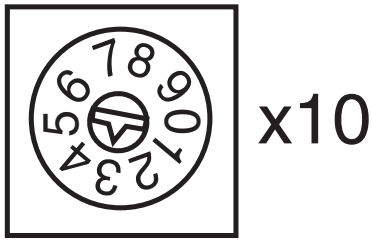

- On the middle rotary switch x10, use a small screwdriver to set the tens digit for the address (“3” in the example).

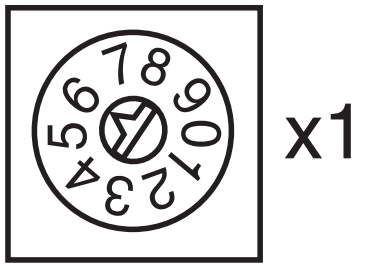

Fieldbus modules
PNOZ mmc6p

- On the lower rotary switch x1, set the ones digit for the address (“6” in the example).

Station address 36 is set in the diagrams as an example.

Download modified project to the PNOZmulti safety system

As soon as an additional expansion module has been connected to the system, the project must be amended in the PNOZmulti Configurator and downloaded back into the base unit. Proceed as described in the operating manual for the base unit.

Connection example

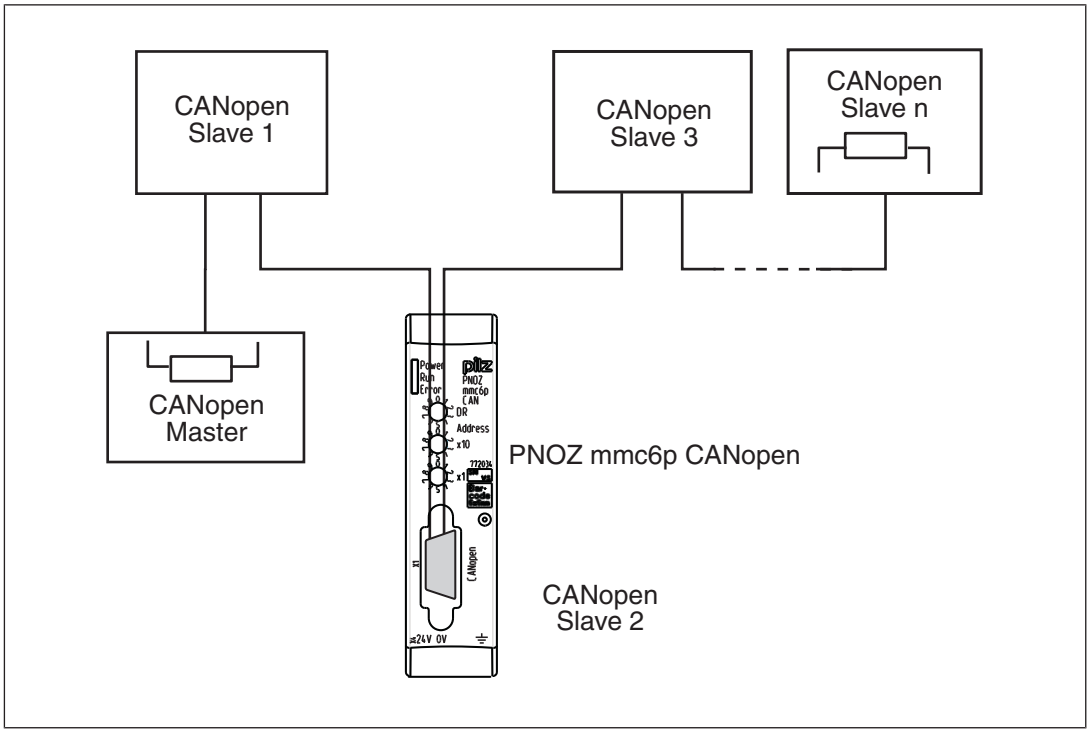

Technical details

General	
Certifications	**CCC, CE, EAC (Eurasian), cULus Listed**
Electrical data	
Supply voltage	
for	**Module supply**
Voltage	**24 V**
Kind	**DC**
Voltage tolerance	**-20 %/+25 %**
Output of external power supply (DC)	**1,5 W**

Fieldbus modules
PNOZ mmc6p

Electrical data	
Status indicator	**LED**
Fieldbus interface	
Fieldbus interface	**CANopen**
Device type	**Slave**
Log	**CiA 301 V4.2.0**
Station address	**0 - 99d**
Transmission rates	**1 MBit/s, 10 kbit/s, 125 kBit/s, 20 kbit/s, 250 kBit/s, 50 kbit/s, 500 kBit/s, 800 kbit/s**
Connection	**9-pin D-Sub male connector**
Galvanic isolation	**yes**
Times	
Supply interruption before de-energisation	**20 ms**
Environmental data	
Ambient temperature	
In accordance with the standard	**EN 60068-2-14**
Temperature range	**0 - 60 °C**
Forced convection in control cabinet off	**55 °C**
Storage temperature	
In accordance with the standard	**EN 60068-2-1/-2**
Temperature range	**-25 - 70 °C**
Climatic suitability	
In accordance with the standard	**EN 60068-2-30, EN 60068-2-78**
Humidity	**93 % r. h. at 40 °C**
Condensation during operation	**Not permitted**
EMC	**EN 61131-2**
Vibration	
In accordance with the standard	**EN 60068-2-6**
Frequency	**10,0 - 150,0 Hz**
Acceleration	**1g**
Shock stress	
In accordance with the standard	**EN 60068-2-27**
Acceleration	**15g**
Duration	**11 ms**
Max. operating height above sea level	**2000 m**
Airgap creepage	
In accordance with the standard	**EN 61131-2**
Overvoltage category	**II**
Pollution degree	**2**
Rated insulation voltage	**30 V**

Fieldbus modules
PNOZ mmc6p

Environmental data	
Protection type	
In accordance with the standard	**EN 60529**
Mounting area (e.g. control cabinet)	**IP54**
Housing	**IP20**
Terminals	**IP20**
Potential isolation	
Potential isolation between	**Fieldbus and module voltage**
Type of potential isolation	**Functional insulation**
Rated surge voltage	**500 V**
Mechanical data	
Mounting position	**horizontally on mounting rail**
DIN rail	
Top hat rail	**35 x 7,5 EN 50022**
Recess width	**27 mm**
Material	
Bottom	**PC**
Front	**PC**
Top	**PC**
Connection type	**Spring-loaded terminal, screw terminal**
Conductor cross section with screw terminals	
1 core flexible	**0,25 - 2,50 mm², 24 - 12 AWG**
2 core with the same cross section, flexible with crimp connectors, no plastic sleeve	**0,20 - 1,50 mm², 24 - 16 AWG**
2 core with the same cross section, flexible without crimp connectors or with TWIN crimp connectors	**0,20 - 1,50 mm², 24 - 16 AWG**
Torque setting with screw terminals	**0,50 Nm**
Conductor cross section with spring-loaded terminals: Flexible with/without crimp connector	**0,20 - 2,50 mm², 24 - 12 AWG**
Spring-loaded terminals: Terminal points per connection	**2**
Stripping length with spring-loaded terminals	**9 mm**
Dimensions	
Height	**100,0 mm**
Width	**22,5 mm**
Depth	**115,0 mm**
Weight	**95 g**

Where standards are undated, the 2011-09 latest editions shall apply.

Fieldbus modules
PNOZ mmc6p

Order reference

Product

Product type	Features	Order no.
PNOZ mmc6p	Fieldbus module, CANopen	772 034

Accessories

Connection terminals

Product type	Features	Order no.
Spring terminals PNOZ mmcxp 1 pc.	Spring-loaded terminals, 1 piece	783 542
Spring terminals PNOZ mmcxp 10 pcs.	Spring-loaded terminals, 10 pieces	783 543
Screw terminals PNOZ mmcxp 1 pc.	Screw terminals, 1 piece	793 542
Screw terminals PNOZ mmcxp 10 pcs.	Screw terminals, 10 pieces	793 543

Terminator, jumper

Product type	Features	Order No.
PNOZ s terminator plug	Terminator, yellow, 10 pieces	750 010
PNOZ s connector	Jumper, 10 pieces	750 020

Fieldbus modules
PNOZ mmc7p CC

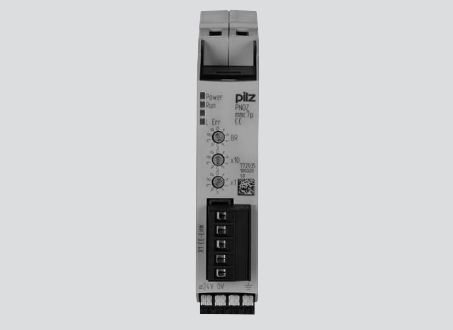

Overview

Unit features

Application of the product PNOZ mmc7p CC:

Expansion module for connection to a base unit from the PNOZmulti Mini system.

The product has the following features:

- Can be configured in the PNOZmulti Configurator
- Connection for CC-Link
- Station addresses from 1 ... 63, selected via rotary switch
- Station type: Remote Device
- Occupied stations: 2
- 24 virtual inputs and outputs on the control system PNOZmulti can be defined in the PNOZmulti Configurator for communication with the fieldbus CC-Link . The number of inputs and outputs can be extended to 128. Please note that when the extended inputs and outputs 24 - 127 are used they have different properties (see document entitled "Communication Interfaces").
- Max. 1 PNOZ mmc7p CC can be connected to the base unit
- Plug-in connection terminals:
  Either spring-loaded terminal or screw terminal available as an accessory (see Order references for accessories [📖 772]).
- Please refer to the document "PNOZmulti System Expansion" for the PNOZmulti base units that can be connected.

Fieldbus modules
PNOZ mmc7p CC

Front view

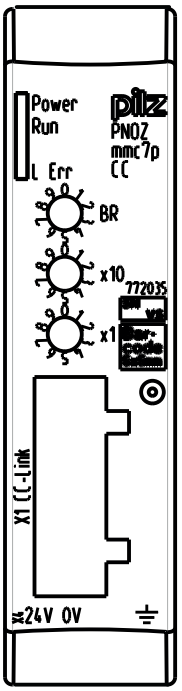

Legend:

- X1: CC-Link interface
- 0 V, 24 V: Supply connections
- LEDs:
  - Power
  - Run
  - L Err

Function description

Functions

The virtual inputs and outputs that are to be transferred via the fieldbus CC-Link are selected and configured in the PNOZmulti Configurator. The base unit and the fieldbus module PNOZ mmc7p CC are connected via a jumper. After the supply voltage is switched on or the PNOZmulti control system is reset, the fieldbus module PNOZ mmc7p CC is configured and started automatically.

LEDs indicate the status of the fieldbus module CC-Link.

The configuration is described in detail in the PNOZmulti Configurator's online help.

Fieldbus modules
PNOZ mmc7p CC

Input and output data

The data is structured as follows:

- Input area
  - Inputs on PNOZmulti Configurator: i00 … i23
  - Input data CC-Link: RY0n, RY1n with n = 0 … F

    Example: i23 -> RY17

n	F	E	D	C	B	A	9	8	7	6	5	4	3	2	1	0
RY0n	i15	i14	i13	i12	i11	i10	i09	i08	i07	i06	i05	i04	i03	i02	i01	i00
RY1n	-	-	-	-	-	-	-	-	i23	i22	i21	i20	i19	i18	i17	i16

- Output range
  - Outputs on PNOZmulti Configurator: o00 … o23
  - Output data CC-Link: RXn, RX1n with n = 0 … F

    Example: o22 -> Rx16

n	F	E	D	C	B	A	9	8	7	6	5	4	3	2	1	0
RX 0n	o15	o14	o13	o12	o11	o10	o09	o08	o07	o06	o05	o04	o03	o02	o01	o00
RX 1n	-	-	-	-	-	-	-	-	o23	o22	o21	o20	o19	o18	o17	o16

The number of virtual inputs and outputs can be extended to 128 (see document "Communication Interfaces" in the section entitled "Fieldbus modules")

Detailed information on data exchange is available in the document "Communication Interfaces PNOZmulti 2" in the section entitled "Fieldbus modules".

Fieldbus modules
PNOZ mmc7p CC

Block diagram

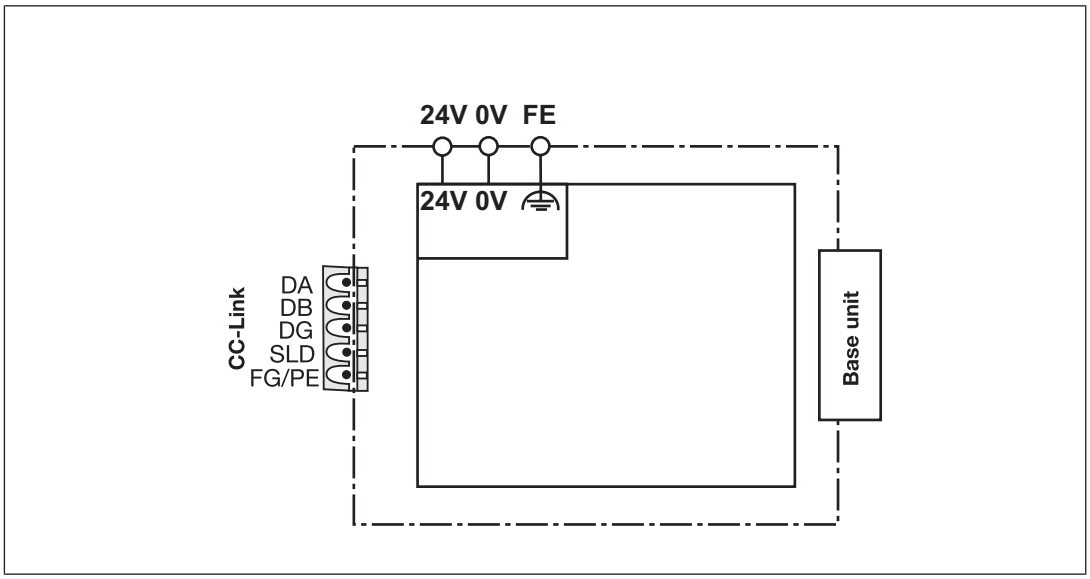

Installation

Dimensions in mm

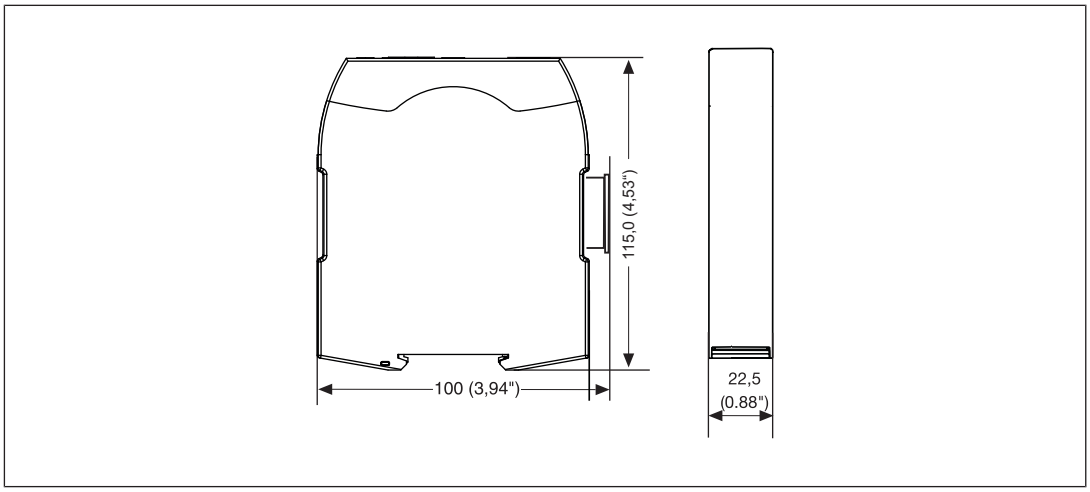

Fieldbus modules
PNOZ mmc7p CC

Commissioning

General wiring guidelines

The wiring is defined in the circuit diagram of the PNOZmulti Configurator.

Please note:

- Information given in the Technical details [652] must be followed.
- The position of the expansion module is specified in the Hardware configuration of the PNOZmulti Configurator.
- Use copper wiring with a temperature stability of 75 °C.
- Always connect the mounting rail to the protective earth via an earthing terminal. This will be used to dissipate hazardous voltages in the case of a fault.
- The power supply must meet the regulations for extra low voltages with protective electrical separation (SELV, PELV).

Connecting the supply voltage

Connect the supply voltage to the fieldbus module:

- **24 V** terminal: + 24 VDC
- **0 V** terminal: 0 V
- Protect the supply voltage as follows:
  - Circuit breaker, characteristic C - 6 A

    or
  - Blow-out fuse, slow, 6A

Interface assignment

It is possible to define which outputs on the safety system will communicate with CC-Link. The connection to CC-Link is made via a 5-pin screw connector.

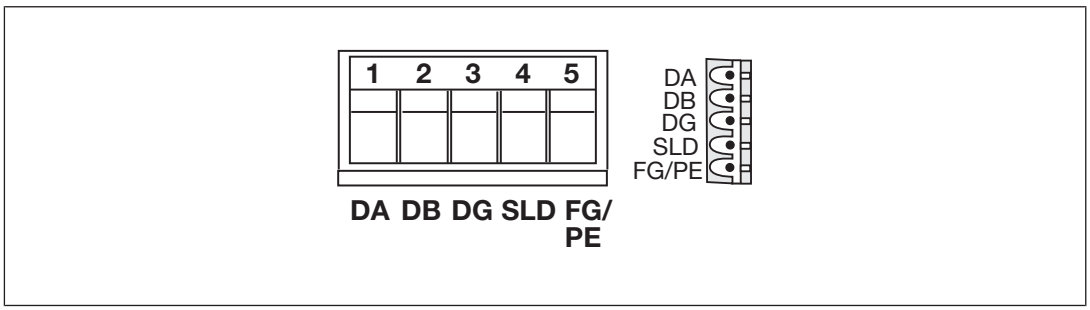

1: DA (Channel A)

2: DB (Channel B)

3: DG (Earth)

4: SLD (Cable shield)

Fieldbus modules
PNOZ mmc7p CC

5: FG/PE (Functional earth)

Download modified project to the PNOZmulti safety system

As soon as an additional expansion module has been connected to the system, the project must be amended in the PNOZmulti Configurator and downloaded back into the base unit. Proceed as described in the operating manual for the base unit.

Connection example

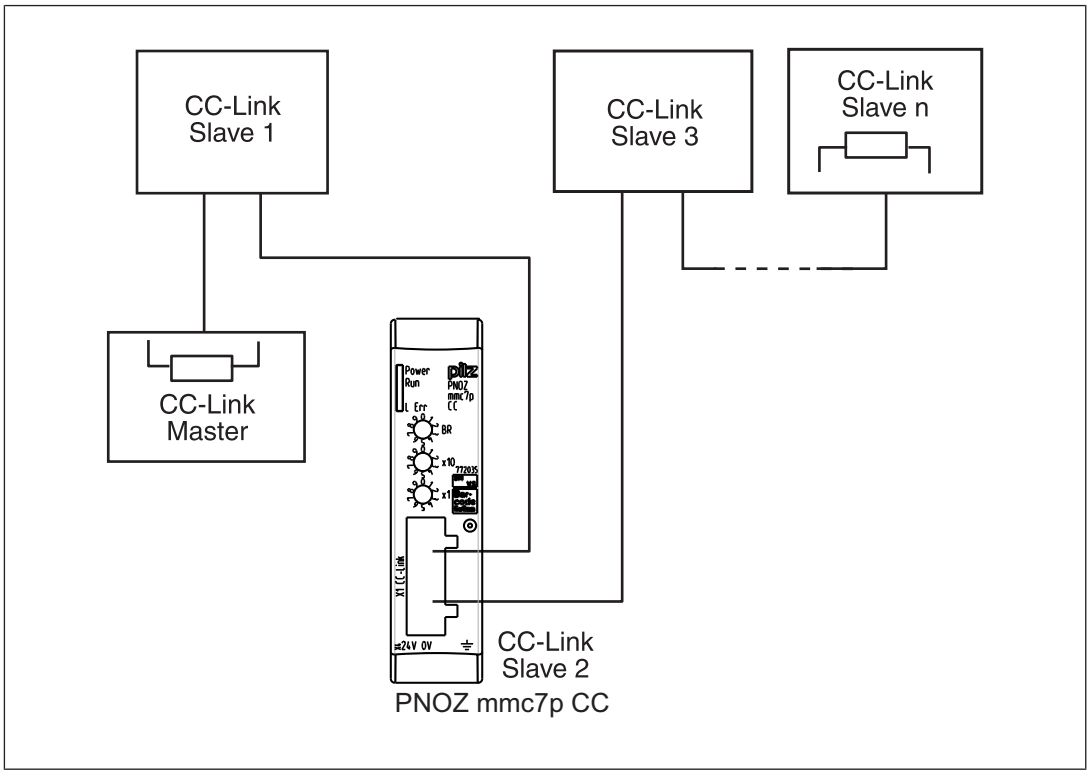

Technical Details

General	
Certifications	**CCC, CE, GOST**
Electrical data	
Supply voltage	
for	**Module supply**
Voltage	**24 V**
Kind	**DC**
Voltage tolerance	**-20 %/+25 %**
Output of external power supply (DC)	**1,5 W**

Fieldbus modules
PNOZ mmc7p CC

Electrical data	
Status indicator	**LED**
Fieldbus interface	
Fieldbus interface	**CC-Link V1.10**
Device type	**Slave**
Station address	**1 ... 63d**
Transmission rates	**10 MBit/s, 156 kbit/s, 2,5 MBit/s, 5 MBit/s, 625 kbit/s**
Connection	**5-pin Combicon plug-in connector**
Assigned stations	**2**
Galvanic isolation	**yes**
Test voltage	**500 V AC**
Times	
Supply interruption before de-energisation	**20 ms**
Environmental data	
Ambient temperature	
In accordance with the standard	**EN 60068-2-14**
Temperature range	**0 - 60 °C**
Forced convection in control cabinet off	**55 °C**
Storage temperature	
In accordance with the standard	**EN 60068-2-1/-2**
Temperature range	**-25 - 70 °C**
Climatic suitability	
In accordance with the standard	**EN 60068-2-30, EN 60068-2-78**
Humidity	**93 % r. h. at 40 °C**
Condensation during operation	**Not permitted**
EMC	**EN 61131-2**
Vibration	
In accordance with the standard	**EN 60068-2-6**
Frequency	**10,0 - 150,0 Hz**
Acceleration	**1g**
Shock stress	
In accordance with the standard	**EN 60068-2-27**
Acceleration	**15g**
Duration	**11 ms**
Max. operating height above sea level	**2000 m**
Airgap creepage	
In accordance with the standard	**EN 61131-2**
Overvoltage category	**II**
Pollution degree	**2**
Rated insulation voltage	**30 V**

Fieldbus modules
PNOZ mmc7p CC

Environmental data	
Protection type	
In accordance with the standard	**EN 60529**
Mounting area (e.g. control cabinet)	**IP54**
Housing	**IP20**
Terminals	**IP20**
Potential isolation	
Potential isolation between	**Fieldbus and module voltage**
Type of potential isolation	**Functional insulation**
Rated surge voltage	**500 V**
Mechanical data	
Mounting position	**horizontally on mounting rail**
DIN rail	
Top hat rail	**35 x 7,5 EN 50022**
Recess width	**27 mm**
Material	
Bottom	**PC**
Front	**PC**
Top	**PC**
Connection type	**Spring-loaded terminal, screw terminal**
Conductor cross section with screw terminals	
1 core flexible	**0,25 - 2,50 mm², 24 - 12 AWG**
2 core with the same cross section, flexible with crimp connectors, no plastic sleeve	**0,20 - 1,50 mm², 24 - 16 AWG**
2 core with the same cross section, flexible without crimp connectors or with TWIN crimp connectors	**0,20 - 1,50 mm², 24 - 16 AWG**
Rigid single-core, flexible multi-core or multi-core with crimp connector	**0,5 - 1,5 mm²**
Torque setting with screw terminals	**0,50 Nm**
Conductor cross section with spring-loaded terminals: Flexible with/without crimp connector	**0,20 - 2,50 mm², 24 - 12 AWG**
Spring-loaded terminals: Terminal points per connection	**2**
Stripping length with spring-loaded terminals	**9 mm**
Dimensions	
Height	**100,0 mm**
Width	**22,5 mm**
Depth	**110,0 mm**
Weight	**90 g**

Where standards are undated, the 2011-09 latest editions shall apply.

Fieldbus modules
PNOZ mmc7p CC

Order reference

Product

Product type	Features	Order no.
PNOZ mmc7p CC	Fieldbus module, CC-Link	772035

Accessories

Connection terminals

Product type	Features	Order no.
Spring terminals PNOZ mmcxp 1 pc.	Spring-loaded terminals, 1 piece	783 542
Spring terminals PNOZ mmcxp 10 pcs.	Spring-loaded terminals, 10 pieces	783 543
Screw terminals PNOZ mmcxp 1 pc.	Screw terminals, 1 piece	793 542
Screw terminals PNOZ mmcxp 10 pcs.	Screw terminals, 10 pieces	793 543

Terminator, jumper

Product type	Features	Order No.
PNOZ s terminator plug	Terminator, yellow, 10 pieces	750 010
PNOZ s connector	Jumper, 10 pieces	750 020

Fieldbus modules
PNOZ mmc11p



Overview

Unit features

Application of the product PNOZ mmc11p:

Expansion module for connection to a base unit from the PNOZmulti Mini system.

The product has the following features:

- Can be configured in the PNOZmulti Configurator
- Network protocols: EtherCAT
- Supports CANopen over EtherCAT (DS301 V4.02 compliant)
- Status indicators for communication with EtherCAT and for errors
- 24 virtual inputs and outputs on the control system PNOZmulti can be defined in the PNOZmulti Configurator for communication with the fieldbus EtherCAT . The number of inputs and outputs can be extended to 128. Please note that when the extended inputs and outputs 24 - 127 are used they have different properties (see document entitled "Communication Interfaces").
- Max. 1 PNOZ mmc11p can be connected to the base unit
- Plug-in connection terminals:
  Either spring-loaded terminal or screw terminal available as an accessory (see Order references for accessories [📖 772]).
- Please refer to the document "PNOZmulti System Expansion" for details of the base units PNOZmulti Mini that can be connected.

Fieldbus modules
PNOZ mmc11p

Front view

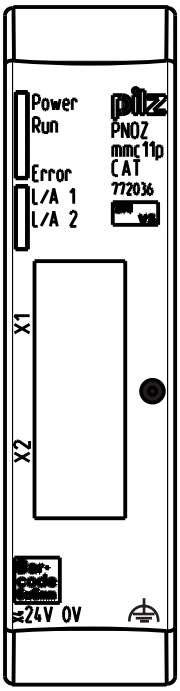

Legend:

- X1: EtherCAT IN
- X2: EtherCAT OUT
- X4: 0 V, 24 V:
  Supply connections
- ⏚: Functional earth
- LEDs:
  - Power
  - Run
  - Error
  - L/A 1
  - L/A 2

EtherCAT is registered trademark and patented technology, licensed by Beckhoff Automation GmbH, Germany

Fieldbus modules
PNOZ mmc11p

Function description

Operation

The virtual inputs and outputs that are to be transferred via EtherCAT are selected and configured in the PNOZmulti Configurator. The base unit and the expansion module PNOZ mmc11p are connected via a jumper. After the supply voltage is switched on or the PNOZmulti control system is reset, the expansion module PNOZ mmc11p is configured and started automatically.

The connection to EtherCAT is made via the two RJ45 sockets.

LEDs indicate the status of the expansion module on EtherCAT.

The configuration is described in detail in the PNOZmulti Configurator's online help.

Input and output data

The data is structured as follows:

- Input area

  The inputs are defined in the master and transferred to the PNOZmulti. Each input has a number, e.g. input bit 4 of byte 1 has the number i12.

- Output range

  The outputs are defined in the PNOZmulti Configurator. Each output that is used is given a number there, e.g. o0, o5... The status of output o0 is stored in bit 0 of byte 0; the status of output o5 is stored in bit 5 of byte 0 etc.

- Output range only: Byte 3

  Bits 0 … 4: Status of LEDs on the PNOZmulti

  – Bit 0: OFAULT
  – Bit 1: IFAULT
  – Bit 2: FAULT
  – Bit 3: DIAG
  – Bit 4: RUN

  Bit 5: Data is being exchanged.

Detailed information on data exchange (tables, segments) is available in the document "Communication Interfaces" in the section entitled "Fieldbus modules".

Fieldbus modules
PNOZ mmc11p

Assigning the inputs/outputs in the PNOZmulti Configurator to the EtherCAT inputs/outputs

Virtual inputs on PNOZmulti Configurator	i0 ... I7	i8 ... i15	i16 ... i23
Input data EtherCAT	Byte 0: Bits 0 … 7	Byte 1: Bits 0 … 7	Byte 2: Bits 0 … 7
Virtual outputs on PNOZmulti Configurator	o0 ... o7	o8 ... o15	o16 ... o23
Output data EtherCAT	Byte 0: Bits 0 … 7	Byte 1: Bits 0 … 7	Byte 2: Bits 0 … 7

The number of virtual inputs and outputs can be extended to 128 (see document "Communication Interfaces" in the section entitled "Fieldbus modules")

Block diagram

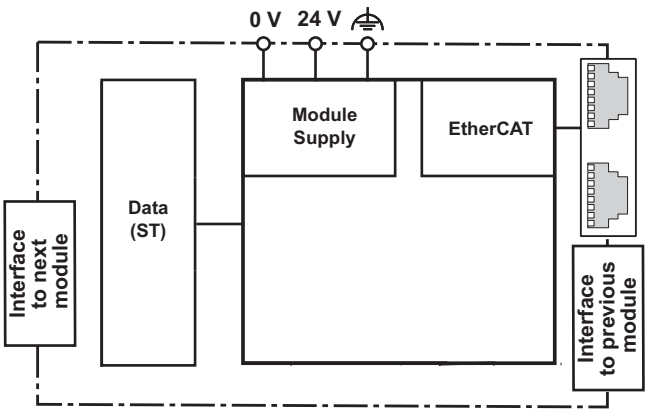

Installation

Dimensions in mm

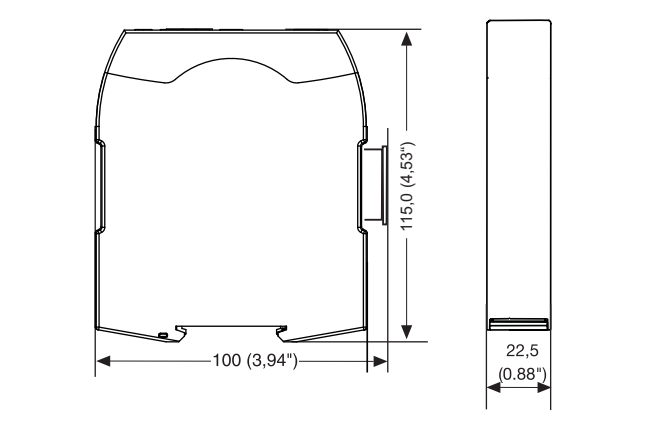

Fieldbus modules
PNOZ mmc11p

Commissioning

General wiring guidelines

The wiring is defined in the circuit diagram of the PNOZmulti Configurator.

It is possible to define which inputs and outputs on the safety system will communicate with EtherCAT.

Please note:

- Information given in the "Technical details" must be followed.
- Use copper wire that can withstand 75 °C.
- External measures must be used to connect the ⏚ terminal to the function earth (e.g. mounting rail).

Please note the following when connecting to EtherCAT:

- The following minimum requirements of the connection cable and connector must be met:
  - Only use standard industrial Ethernet cable and connectors.
  - Only use double-shielded twisted pair cable and shielded RJ45 connectors (industrial connectors).
  - 100BaseTX cable in accordance with the Ethernet standard (min. Category 5)
- Measures to protect against interference:

  Ensure the requirements for the industrial use of EtherCAT are met, as stated in the Installation Manual published by the User Group.

Connecting the supply voltage

Connect the supply voltage to the fieldbus module:

- **24 V** terminal: + 24 VDC
- **0 V** terminal: 0 V
- Protect the supply voltage as follows:
  - Circuit breaker, characteristic C - 6 A

    or
  - Blow-out fuse, slow, 6A

Fieldbus modules
PNOZ mmc11p

Interface assignment

RJ45 socket 8-pin	PIN	Standard
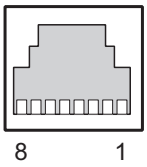	1	TD+ (Transmit+)
	2	TD- (Transmit-)
	3	RD+ (Receive+)
	4	n.c.
	5	n.c.
	6	RD- (Receive-)
	7	n.c.
	8	n.c.

n.c.: Not connected

Download modified project to the PNOZmulti safety system

As soon as an additional expansion module has been connected to the system, the project must be amended in the PNOZmulti Configurator and downloaded back into the base unit. Proceed as described in the operating manual for the base unit.

Preparing for operation

- Install Device Description File

  Install the *Device Description File* in your configuration software. You can only then use the PNOZ mmc11p.
- Connect the supply voltage to the base unit:

  Terminals **24 V** and **A1 (+)**: + 24 VDC

  Terminals **0 V** and **A2 (-)** : 0 V

Fieldbus modules
PNOZ mmc11p

Connection example

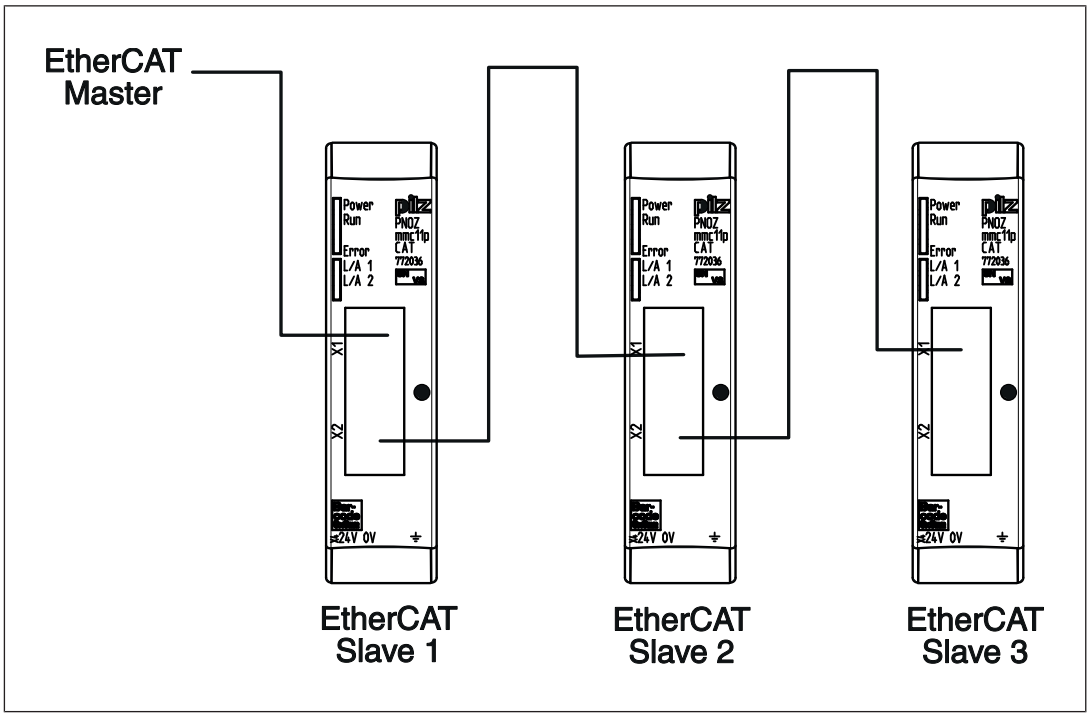

Technical details

General	
Certifications	**CCC, CE, EAC (Eurasian), cULus Listed**
Electrical data	
Supply voltage	
for	**Module supply**
Voltage	**24 V**
Kind	**DC**
Voltage tolerance	**-20 %/+25 %**
Output of external power supply (DC)	**1,5 W**
Status indicator	**LED**
Fieldbus interface	
Fieldbus interface	**EtherCAT**
Device type	**Slave**
Log	**CANopen over EtherCAT**
Transmission rates	**100 MBit/s**
Connection	**RJ45**
Galvanic isolation	**yes**

Fieldbus modules
PNOZ mmc11p

Times	
Supply interruption before de-energisation	**20 ms**
Environmental data	
Ambient temperature	
In accordance with the standard	**EN 60068-2-14**
Temperature range	**0 - 60 °C**
Forced convection in control cabinet off	**55 °C**
Storage temperature	
In accordance with the standard	**EN 60068-2-1/-2**
Temperature range	**-25 - 70 °C**
Climatic suitability	
In accordance with the standard	**EN 60068-2-30, EN 60068-2-78**
Humidity	**93 % r. h. at 40 °C**
Condensation during operation	**Not permitted**
EMC	**EN 61131-2**
Vibration	
In accordance with the standard	**EN 60068-2-6**
Frequency	**10,0 - 150,0 Hz**
Acceleration	**1g**
Shock stress	
In accordance with the standard	**EN 60068-2-27**
Acceleration	**15g**
Duration	**11 ms**
Max. operating height above sea level	**2000 m**
Airgap creepage	
In accordance with the standard	**EN 61131-2**
Overvoltage category	**II**
Pollution degree	**2**
Rated insulation voltage	**30 V**
Protection type	
In accordance with the standard	**EN 60529**
Mounting area (e.g. control cabinet)	**IP54**
Housing	**IP20**
Terminals	**IP20**
Potential isolation	
Potential isolation between	**Fieldbus and module voltage**
Type of potential isolation	**Functional insulation**
Rated surge voltage	**500 V**
Mechanical data	
Mounting position	**horizontally on mounting rail**

Fieldbus modules
PNOZ mmc11p

Mechanical data	
DIN rail	
Top hat rail	**35 x 7,5 EN 50022**
Recess width	**27 mm**
Material	
Bottom	**PC**
Front	**PC**
Top	**PC**
Connection type	**Spring-loaded terminal, screw terminal**
Conductor cross section with screw terminals	
1 core flexible	**0,25 - 2,50 mm², 24 - 12 AWG**
2 core with the same cross section, flexible with crimp connectors, no plastic sleeve	**0,20 - 2,50 mm², 24 - 16 AWG**
2 core with the same cross section, flexible without crimp connectors or with TWIN crimp connectors	**0,20 - 1,50 mm², 24 - 16 AWG**
Torque setting with screw terminals	**0,50 Nm**
Conductor cross section with spring-loaded terminals: Flexible with/without crimp connector	**0,20 - 2,50 mm², 24 - 12 AWG**
Spring-loaded terminals: Terminal points per connection	**2**
Stripping length with spring-loaded terminals	**9 mm**
Dimensions	
Height	**100,0 mm**
Width	**22,5 mm**
Depth	**115,0 mm**
Weight	**95 g**

Where standards are undated, the 2012-10 latest editions shall apply.

Fieldbus modules
PNOZ mmc11p

Order reference

Product

Product type	Features	Order no.
PNOZ mmc11p	Fieldbus module, EtherCAT	772 036

Accessories

Connection terminals

Product type	Features	Order no.
Spring terminals PNOZ mmcxp 1 pc.	Spring-loaded terminals, 1 piece	783 542
Spring terminals PNOZ mmcxp 10 pcs.	Spring-loaded terminals, 10 pieces	783 543
Screw terminals PNOZ mmcxp 1 pc.	Screw terminals, 1 piece	793 542
Screw terminals PNOZ mmcxp 10 pcs.	Screw terminals, 10 pieces	793 543

Terminator, jumper

Product type	Features	Order No.
PNOZ s terminator plug	Terminator, yellow, 10 pieces	750 010
PNOZ s connector	Jumper, 10 pieces	750 020

Fieldbus modules
PNOZ mmc12p



Overview

Unit features

Application of the product PNOZ mmc12p:

Expansion module for connection to a base unit from the PNOZmulti Mini system.

The product has the following features:

- Can be configured in the PNOZmulti Configurator
- Connection for Ethernet POWERLINK (Ethernet POWERLINK V 2 protocol)
- Station addresses from 1 ... 239, selected via rotary switch
- The minimum cycle time for an application of 20 Byte Output and 20 Byte Input is 250µs. The minimum cycle time is 450 µs at the maximum PDO size of 254 Byte Input and 20 Byte Output (the inputs and outputs in this case are viewed from the Managing Node).
- 24 virtual inputs and outputs on the control system PNOZmulti can be defined in the PNOZmulti Configurator for communication with the fieldbus Ethernet POWERLINK . The number of inputs and outputs can be extended to 128. Please note that when the extended inputs and outputs 24 - 127 are used they have different properties (see document entitled "Communication Interfaces").
- Max. 1 PNOZ mmc12p can be connected to the base unit
- Please refer to the document "PNOZmulti System Expansion" for details of the base units PNOZmulti Mini that can be connected.

Fieldbus modules
PNOZ mmc12p

Front view

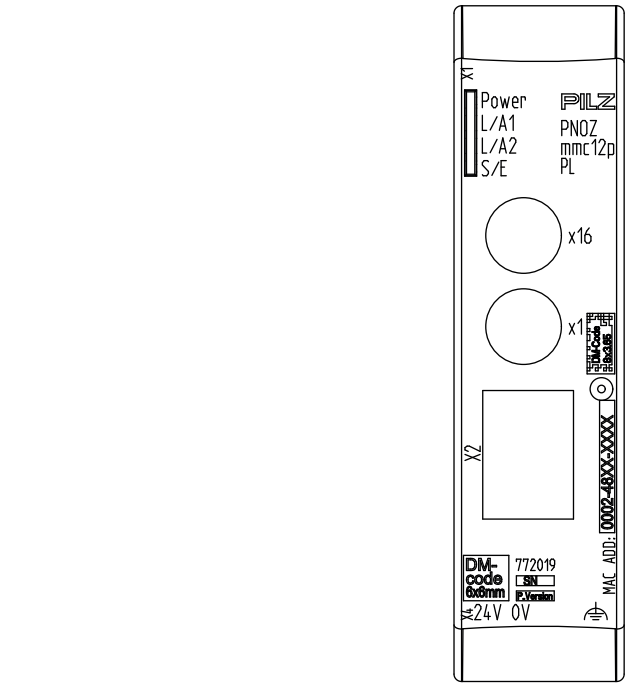

Legend:

- X1, X2: Ethernet POWERLINK interfaces
- 0 V, 24 V: Supply connections
- ⏚: Functional earth
- LED:
  - Power
  - L/A1
  - L/A2
  - S/E (Status/Error)

Function description

Functions

The virtual inputs and outputs that are to be transferred via the fieldbus Ethernet POWERLINK are selected and configured in the PNOZmulti Configurator. The base unit and the fieldbus module PNOZ mmc12p are connected via a jumper. After the supply voltage is switched on or the PNOZmulti control system is reset, the fieldbus module PNOZ mmc12p is configured and started automatically.

Fieldbus modules
PNOZ mmc12p

LEDs indicate the status of the fieldbus module Ethernet POWERLINK.

The configuration is described in detail in the PNOZmulti Configurator's online help.

Input and output data

The data is structured as follows:

- Input area

  The inputs are defined in the Managing Node and transferred to the PNOZmulti. Each input has a number, e.g. input bit 4 of SDO 2100:02 has the number i12.

Virtual inputs PNOZmulti Configurator	I0 … I7	I8 … I15	I16 … I23
Ethernet POWERLINK	SDO 2100:01: Bit 0 … 7	SDO 2100:02: Bit 0 … 7	SDO 2100:03: Bit 0 … 7

- Output range

  The outputs are defined in the PNOZmulti Configurator. Each output that is used is given a number there, e.g. o0, o5... The state of output o0 is stored in Bit 0 of SDO 2000:01.

Virtual outputs PNOZmulti Configurator	O0 … O7	O8 … O15	O16 … O23
Ethernet POWERLINK	SDO 2000:01: Bit 0 … 7	SDO 2000:02: Bit 0 … 7	SDO 2000:03: Bit 0 … 7

Detailed information on data exchange is available in the document "Communication Interfaces" in the section entitled "Fieldbus modules".

The number of virtual inputs and outputs can be extended to 128 (see document "Communication Interfaces" in the section entitled "Fieldbus modules")

Fieldbus modules
PNOZ mmc12p

Block diagram

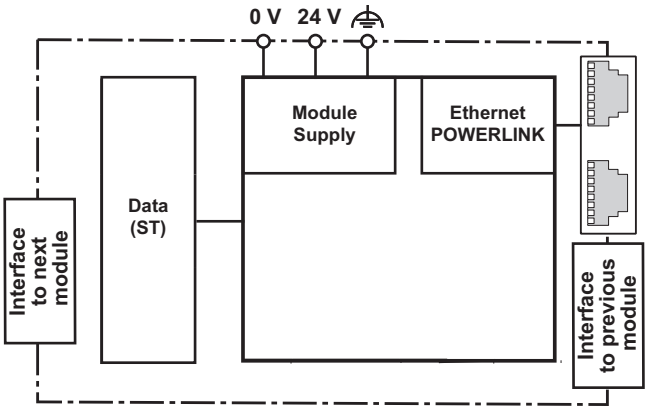

Installation

Dimensions in mm

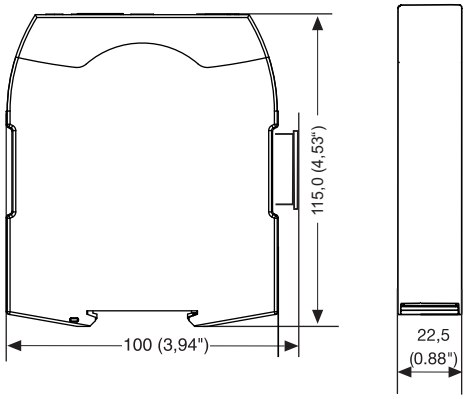

Commissioning

General wiring guidelines

The wiring is defined in the circuit diagram of the PNOZmulti Configurator. It is possible to define which inputs and outputs on the safety system will communicate with Ethernet POWERLINK.

Please note:

- Information given in the "Technical details [📖 672]" must be followed.
- Use copper wiring with a temperature stability of 75 °C.

Fieldbus modules
PNOZ mmc12p

Please note the following when connecting to Ethernet POWERLINK:

- The following minimum requirements of the connection cable and connector must be met:
  - Only use standard industrial Ethernet cable and connectors.
  - Only use double-shielded twisted pair cable and shielded RJ45 connectors (industrial connectors).
  - 100BaseTX cable in accordance with the Ethernet standard (min. Category 5)
- Measures to protect against interference:

  Ensure the requirements for the industrial use of Ethernet POWERLINK are met, as stated in the Installation Manual published by the User Group.
- External measures must be used to connect the ⏚ terminal to the function earth (e.g. mounting rail).
- Always connect the mounting rail to the protective earth via an earthing terminal. This will be used to dissipate hazardous voltages in the case of a fault.
- The power supply must meet the regulations for extra low voltages with protective electrical separation (SELV, PELV).

Connecting the supply voltage

Connect the supply voltage to the fieldbus module:

- **24 V** terminal: + 24 VDC
- **0 V** terminal: 0 V
- Protect the supply voltage as follows:
  - Circuit breaker, characteristic C - 6 A

    or
  - Blow-out fuse, slow, 6A

Fieldbus modules
PNOZ mmc12p

Interface assignment

RJ45 socket 8-pin	PIN	Standard
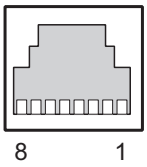	1	TD+ (Transmit+)
	2	TD- (Transmit-)
	3	RD+ (Receive+)
	4	n.c.
	5	n.c.
	6	RD- (Receive-)
	7	n.c.
	8	n.c.

n.c.: Not connected

Connection example

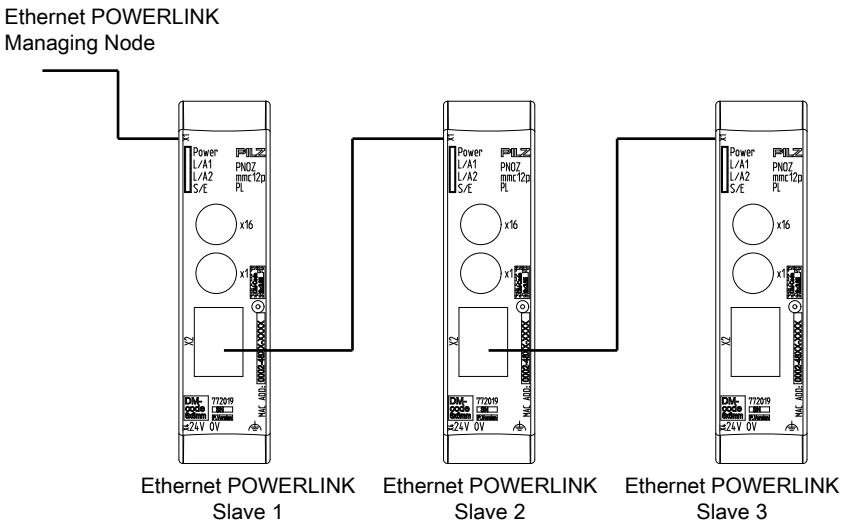

Fieldbus modules
PNOZ mmc12p

Technical Details

General	
Certifications	**CE, EAC (Eurasian), cULus Listed**
Electrical data	
Supply voltage	
for	**Module supply**
Voltage	**24 V**
Kind	**DC**
Voltage tolerance	**-20 %/+25 %**
Max. continuous current that the external power supply must provide	**50 mA**
Output of external power supply (DC)	**1,2 W**
Potential isolation	**yes**
Supply voltage	
for	**Module supply**
internal	**Via base unit**
Voltage	**3,3 V**
Kind	**DC**
Current consumption	**60 mA**
Power consumption	**0,2 W**
Max. power dissipation of module	**1,5 W**
Status indicator	**LED**
Fieldbus interface	
Fieldbus interface	**Ethernet POWERLINK V2**
Device type	**Controlled Node**
Transmission rates	**100 MBit/s**
Connection	**RJ45**
Galvanic isolation	**yes**
Times	
Supply interruption before de-energisation	**20 ms**
Environmental data	
Ambient temperature	
In accordance with the standard	**EN 60068-2-14**
Temperature range	**0 - 60 °C**
Forced convection in control cabinet off	**55 °C**
Storage temperature	
In accordance with the standard	**EN 60068-2-1/-2**
Temperature range	**-25 - 70 °C**
Climatic suitability	
In accordance with the standard	**EN 60068-2-30, EN 60068-2-78**

Fieldbus modules
PNOZ mmc12p

Environmental data	
Condensation during operation	**Not permitted**
Max. operating height above sea level	**2000 m**
EMC	**EN 61131-2**
Vibration	
In accordance with the standard	**EN 60068-2-6**
Frequency	**10 - 150 Hz**
Acceleration	**1g**
Shock stress	
In accordance with the standard	**EN 60068-2-27**
Acceleration	**15g**
Duration	**11 ms**
Airgap creepage	
In accordance with the standard	**EN 61131-2**
Overvoltage category	**II**
Pollution degree	**2**
Rated insulation voltage	**30 V**
Protection type	
In accordance with the standard	**EN 60529**
Housing	**IP20**
Terminals	**IP20**
Mounting area (e.g. control cabinet)	**IP54**
Potential isolation	
Potential isolation between	**Fieldbus and module voltage**
Type of potential isolation	**Functional insulation**
Rated surge voltage	**500 V**
Mechanical data	
Mounting position	**horizontally on mounting rail**
DIN rail	
Top hat rail	**35 x 7,5 EN 50022**
Recess width	**27 mm**
Material	
Bottom	**PC**
Front	**PC**
Top	**PC**
Connection type	**Spring-loaded terminal, screw terminal**
Conductor cross section with screw terminals	
1 core flexible	**0,25 - 2,5 mm², 24 - 12 AWG**
2 core with the same cross section, flexible without crimp connectors or with TWIN crimp connectors	**0,2 - 1,5 mm², 24 - 16 AWG**
Torque setting with screw terminals	**0,5 Nm**

Fieldbus modules
PNOZ mmc12p

Mechanical data	
Conductor cross section with spring-loaded terminals: Flexible with/without crimp connector	**0,2 - 2,5 mm², 24 - 12 AWG**
Spring-loaded terminals: Terminal points per connection	**2**
Stripping length with spring-loaded terminals	**9 mm**
Dimensions	
Height	**100 mm**
Width	**22,5 mm**
Depth	**110,4 mm**
Weight	**90 g**

Where standards are undated, the 2015-08 latest editions shall apply.

Order reference

Product

Product type	Features	Order no.
PNOZ mmc12p	Fieldbus module, Ethernet POWERLINK	772 019

Accessories

Connection terminals

Product type	Features	Order no.
Spring terminals PNOZ mmcxp 1 pc.	Spring-loaded terminals, 1 piece	783 542
Spring terminals PNOZ mmcxp 10 pcs.	Spring-loaded terminals, 10 pieces	783 543
Screw terminals PNOZ mmcxp 1 pc.	Screw terminals, 1 piece	793 542
Screw terminals PNOZ mmcxp 10 pcs.	Screw terminals, 10 pieces	793 543

Fieldbus modules
PNOZ mmc12p

Terminator, jumper

Product type	Features	Order no.
PNOZ mm0.xp connector left	Jumper yellow/black to connect the modules, 10 pieces	779 260

Contents	Page
Base units	678
Input module	744
Analogue input module	752
Input and output modules	773
Output modules	829
Motion monitoring modules	838
Link modules	949
Communication modules	971
Fieldbus modules	984

Base units
PNOZ m B0



Overview

Unit features

Application of the product PNOZ m B0:

Base unit of the configurable control system PNOZmulti 2

The product has the following features:

- Can be configured in the PNOZmulti Configurator
- Semiconductor outputs:

  4 safety outputs
  Depending on the application, up to PL e of EN ISO 13849-1 and up to SIL CL 3 of EN IEC 62061
- 12 inputs for connecting, for example:
  - Emergency stop pushbutton
  - Two-hand pushbuttons
  - Safety gate limit switches
  - Start button
  - Light beam devices
  - Scanner
  - Enabling switch
  - PSEN
  - Operating mode selector switch
- 8 configurable inputs/outputs

  Can be configured as:
  - Inputs (see above for connection options)

  or
  - Auxiliary outputs

Base units
PNOZ m B0

- 4 configurable outputs
  Can be configured as:
  - Auxiliary outputs

  or
  - Test pulse outputs
- LED display for:
  - Error messages
  - Diagnostics
  - Supply voltage
  - Fault at the outputs
  - Fault at the inputs
- Backlit display for:
  - Error messages
  - State of supply voltage
  - State of the inputs and outputs
  - Status information
  - Unit information
- Test pulse outputs used to monitor shorts across the inputs
- Monitoring of shorts between the safety outputs
- Plug-in connection terminals:
  Either spring-loaded terminal or screw terminal available (see Order references).
- Rotary knob for menu control
- Expansion modules can be connected
  (please refer to the document "PNOZmulti System Expansion" for details of the type and number that can be connected)

Chip card

To be able to use the product you will need a chip card.

Chip cards are available with memories of 8 kByte and 32 kByte. For large-scale projects we recommend the 32 kByte chip card (see Technical Catalogue: Accessories chapter).

Base units
PNOZ m B0

Front view

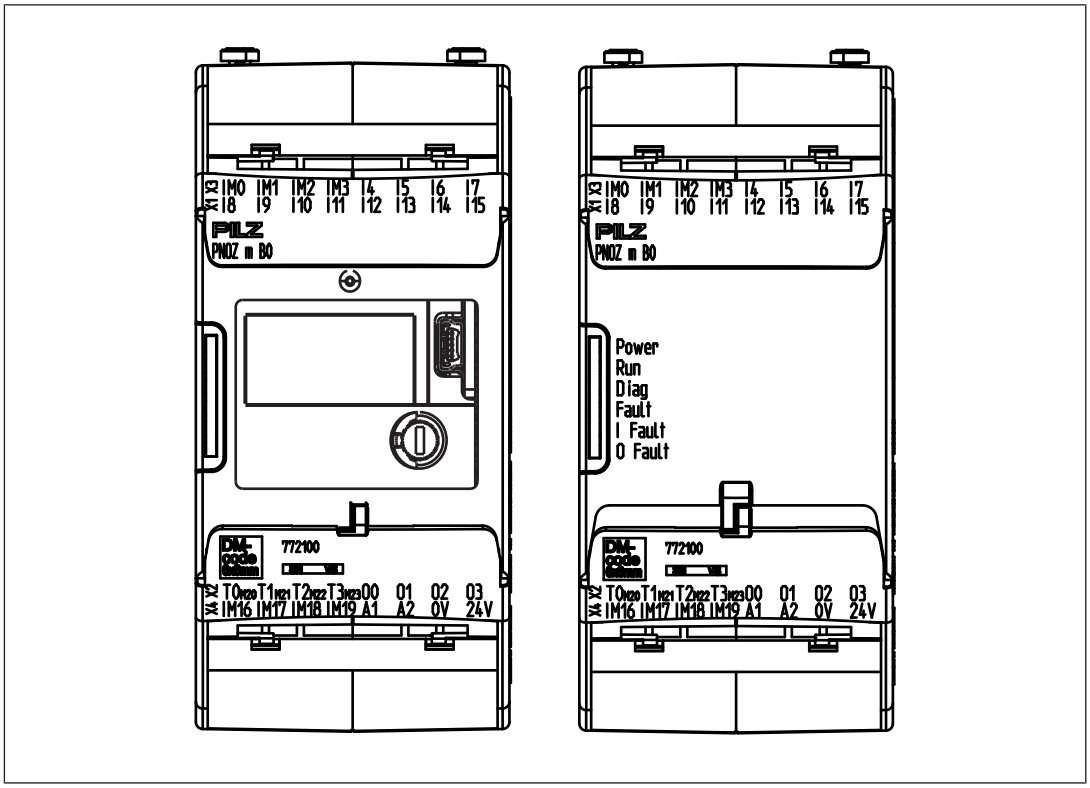

Fig.: Front view with and without cover

Legend

X1:	Inputs I8 ... I15
X2:	Configurable test pulse/auxiliary outputs T0M20 ... T3M23
	Semiconductor outputs O0 ... O3
X3:	Configurable inputs/outputs IM0 – IM3
	Inputs I4 ... I7
X4:	Configurable inputs/outputs IM16 – IM19
	Supply connections
LEDs:	PWR
	RUN
	DIAG
	FAULT
	I FAULT
	O FAULT

Base units
PNOZ m B0

Function description

Functions

The function of the inputs and outputs on the control system depends on the safety circuit created using the PNOZmulti Configurator. A chip card is used to download the safety circuit to the base unit. The base unit has 2 microcontrollers that monitor each other. They evaluate the input circuits on the base unit and expansion modules and switch the outputs on the base unit and expansion modules accordingly.

The LEDs on the base unit and expansion modules indicate the status of the configurable control system PNOZmulti.

The online help on the PNOZmulti Configurator contains descriptions of the operating modes and all the functions of the control system, plus connection examples.

System reaction time

Calculation of the maximum reaction time between an input switching off and a linked output in the system switching off is described in the document "PNOZmulti System Expansion [30]".

Block diagram

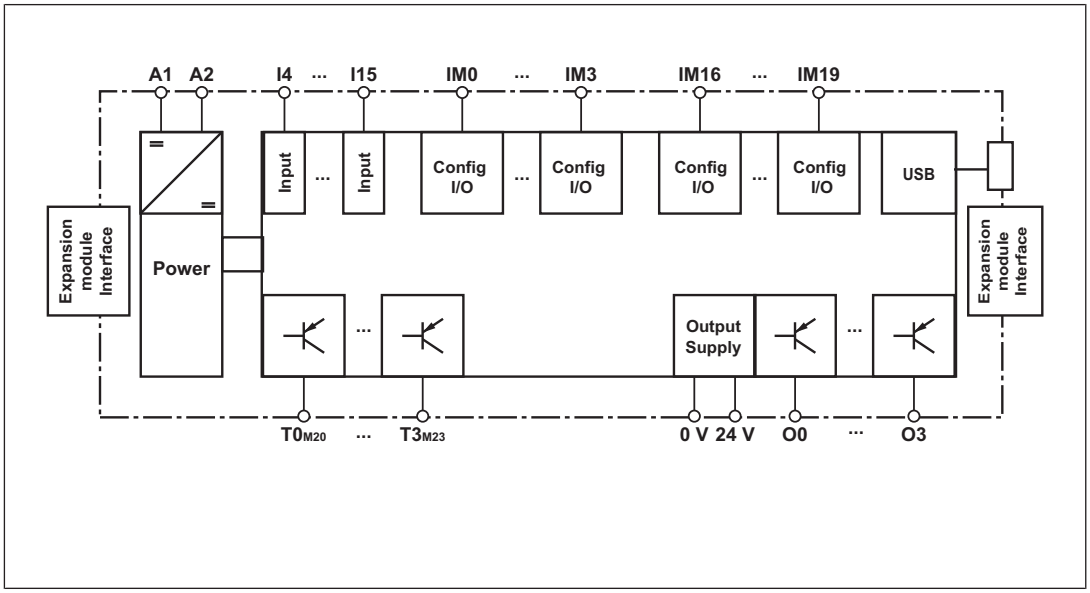

Base units
PNOZ m B0

Installation

Dimensions in mm

*with spring-loaded terminals

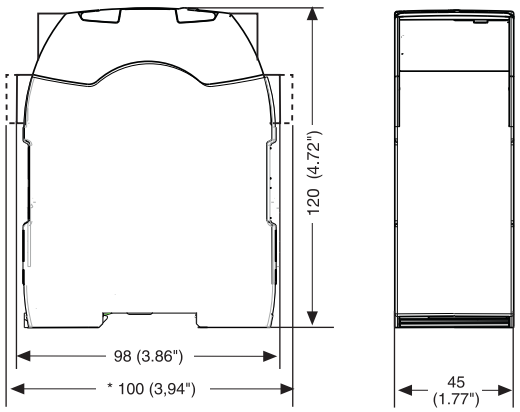

Commissioning

General wiring guidelines

The wiring is defined in the circuit diagram in the Configurator. There you can select the inputs that are to perform a safety function and the outputs that are to switch this safety function.

Please note:

- Information given in the Technical details [688] must be followed.
- Outputs O0 to O3 are semiconductor outputs
- Use copper wiring with a temperature stability of 75 °C.
- Adequate protection must be provided on all output contacts with inductive loads.
- The safety system and input circuits must always be supplied by a single power supply. The power supply must meet the regulations for extra low voltages with protective separation.
- Test pulse outputs must exclusively be used to test the inputs. They must not be used to drive loads.
  Do not route the test pulse lines together with actuator cables within an unprotected multicore cable.

Base units
PNOZ m B0

Connection

Procedure:

- Wire the inputs and outputs on the base unit in accordance with the circuit diagram.
- Connect the supply voltage:
  - Supply voltage for the control system:
  - Terminal A1: + 24 VDC
  - Terminal A2: 0 V
  - Supply voltage for the semiconductor outputs:
  - 24 V terminal: + 24 VDC
  - 0V terminal: 0 V

Please note: The supply voltage for the semiconductor outputs must always be present, even if you are not using the semiconductor outputs.

When the voltages are fed separately using two power supplies, the supply voltage for the control system and the supply voltage for the semiconductor outputs are galvanically isolated.

Supply voltage	
Separate power supplies for the supply voltage to the control system and the supply voltage to the semiconductor outputs	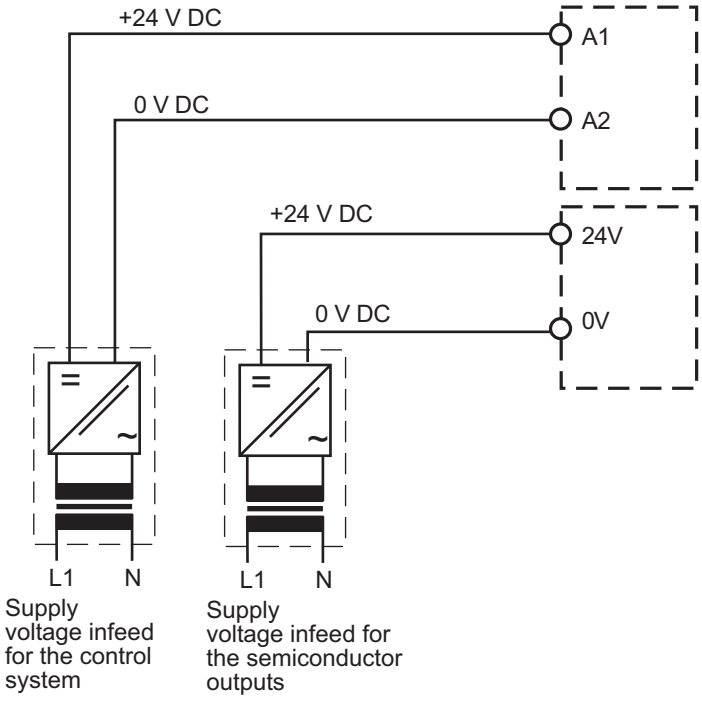

Base units
PNOZ m B0

Supply voltage	
Common power supply for the supply voltage to the control system and the supply voltage to the semiconductor outputs	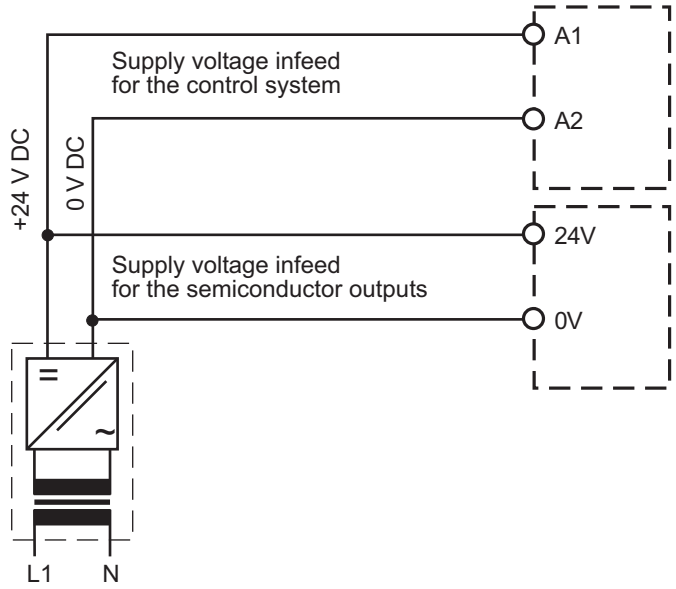

Input circuit	Single-channel	Dual-channel
Emergency stop **without** detection of shorts across contacts	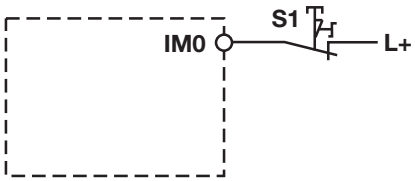	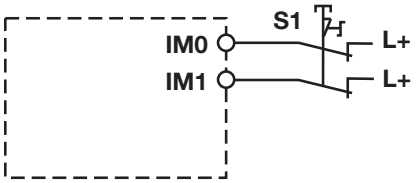
Emergency stop **with** detection of shorts across contacts	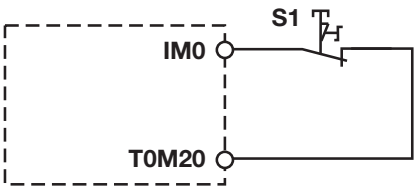	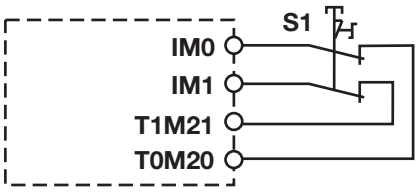

Start circuit	Input circuit without detection of shorts across contacts	Input circuit with detection of shorts across contacts
	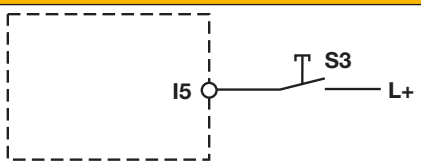	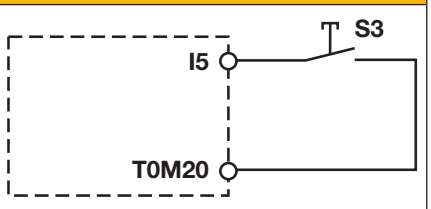

Base units
PNOZ m B0

Semiconductor outputs		
Redundant output	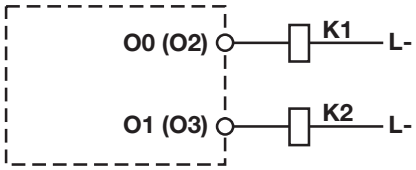	
Single output	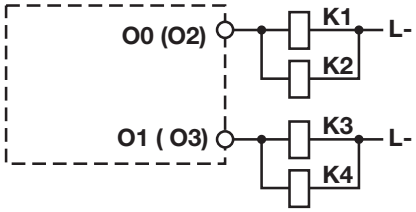	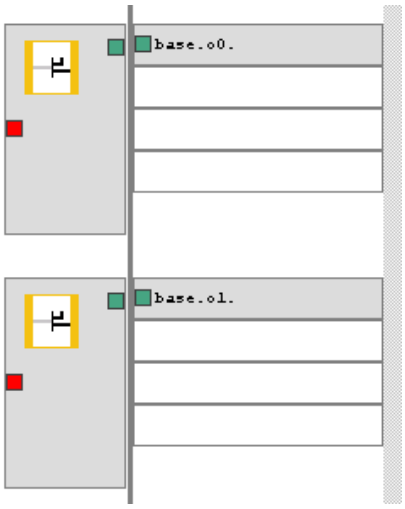
Single output with advanced fault detection*	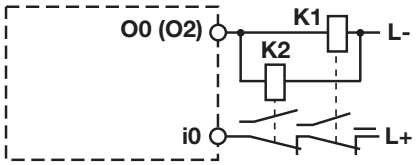	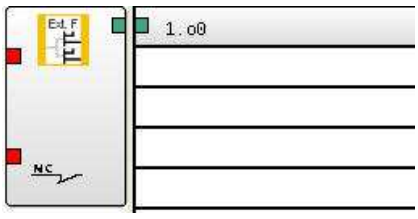

*Two loads may be connected to each safety output with advanced fault detection, even on applications in accordance with EN IEC 62061, SIL CL 3. Prerequisite: Feedback loop is connected, shorts across contacts and external power sources are excluded (e.g. through separate multicore cables). Please note that, in the event of an error in the feedback loop, the safety system switches to a safe condition and shuts down **all** the outputs.

Feedback loop	Redundant output	
Contacts from external contactors	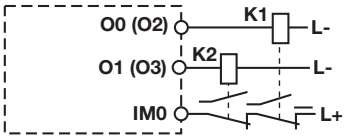	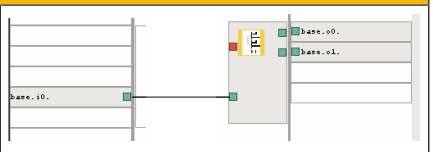

Load project from chip card

Procedure:

- Insert the chip card containing the current project into the card slot on the base unit.
- Switch on the supply voltage. The LC display shows the project name, CRC sum and the date the project was created. Please check this information.
- Load the project by pressing the rotary knob. For the project to be downloaded, the rotary knob must be held down for between 3 and 8 seconds. Once the project has been successfully downloaded, the status of the inputs and outputs will be shown on the display.

Load project via USB port

Procedure:

- Insert a chip card into the card slot on the base unit.
- Connect the computer containing the PNOZmulti Configurator to the base unit via the USB port.
- Switch on the supply voltage.
- Download the project (see PNOZmulti Configurator's online help).
- Once the project has been successfully downloaded, the status of the inputs and outputs and the supply voltage will be shown on the display. The "RUN" LED will be lit.

Base units
PNOZ m B0

Connection example

Dual-channel E-STOP and safety gate wiring, monitored start (IM18), feedback loop (IM16)

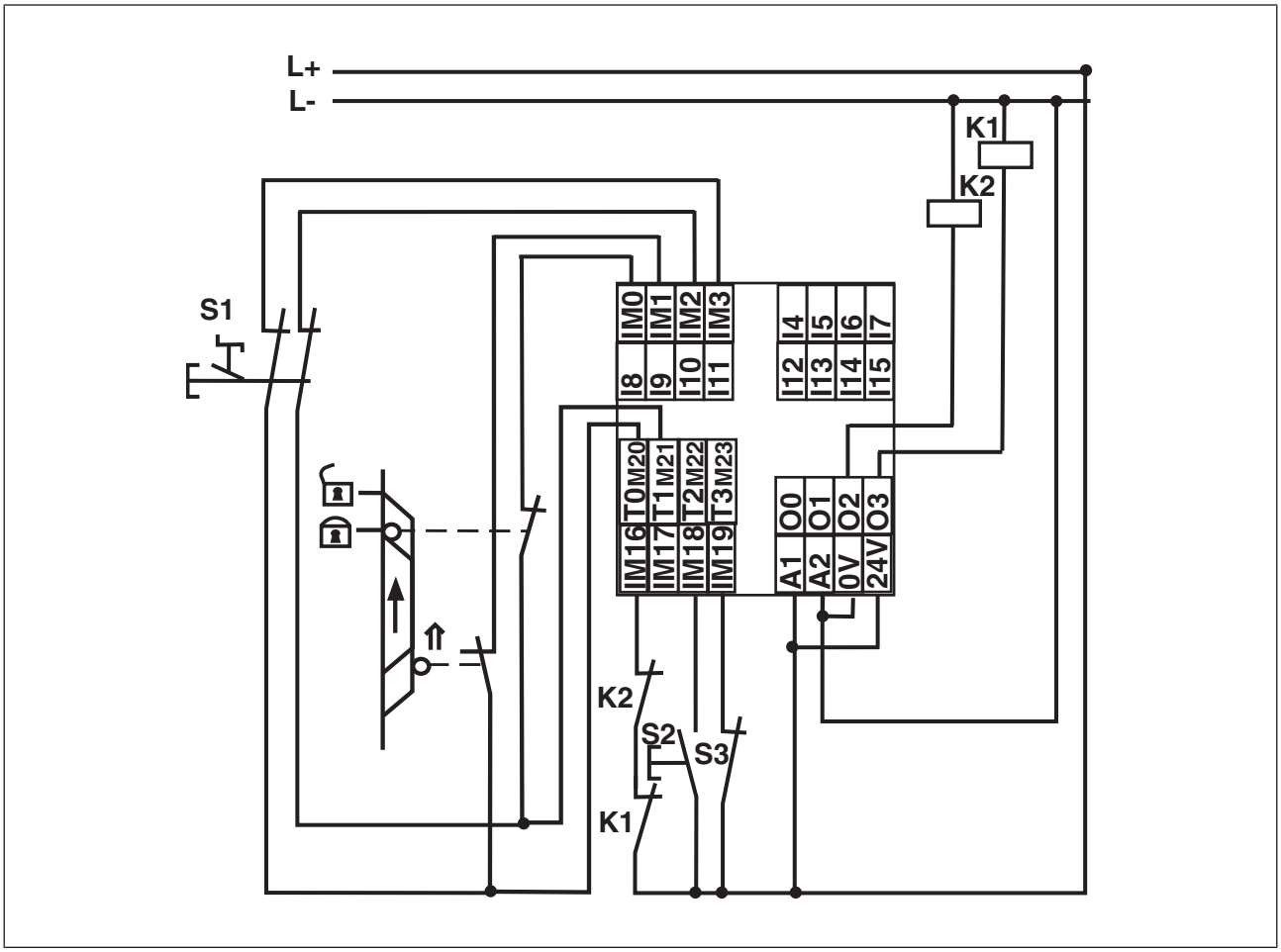

Base units
PNOZ m B0

Technical details

General	
Certifications	**CE, EAC (Eurasian), KOSHA, TÜV, cULus Listed**
Application range	**Failsafe**
Module's device code	**0060h**
Electrical data	
Supply voltage	
for	**Supply to the system**
Voltage	**24 V**
Kind	**DC**
Voltage tolerance	**-20 %/+25 %**
Max. continuous current that the external power supply must provide	**1,6 A**
Inrush current that the external power supply must provide	**3 A**
Supply voltage	
for	**Supply to the SC outputs**
Voltage	**24 V**
Kind	**DC**
Voltage tolerance	**-20 %/+25 %**
Max. continuous current that the external power supply must provide	**8 A**
Potential isolation	**yes**
Supply voltage	
Current consumption	**32 mA**
Power consumption	**0,8 W**
Max. power dissipation of module	**7,4 W**
Status indicator	**Display, LED**
Permitted loads	**inductive, capacitive, resistive**
Configurable inputs/outputs (inputs or auxiliary outputs)	
Number	**8**
Potential isolation	**No**
Configurable inputs	
Input voltage in accordance with EN 61131-2 Type 1	**24 V**
Input current at rated voltage	**5 mA**
Input current range	**2,5 - 5,3 mA**
Pulse suppression	**0,5 ms**
Maximum input delay	**2 ms**

Base units
PNOZ m B0

Configurable inputs/outputs (inputs or auxiliary outputs)	
Configurable auxiliary outputs	
Voltage	**24 V**
Output current	**75 mA**
Output current range	**0 - 100 mA**
Max. transient pulsed current	**500 mA**
Short circuit-proof	**yes**
Residual current at "0"	**0,5 mA**
Voltage at "1"	**UB - 2 V at 0.1 A**
Inputs	
Number	**12**
Input voltage in accordance with EN 61131-2 Type 1	**24 V DC**
Input current at rated voltage	**5 mA**
Input current range	**2,5 - 5,3 mA**
Pulse suppression	**0,5 ms**
Maximum input delay	**2 ms**
Potential isolation	**No**
Semiconductor outputs	
Number of positive-switching single-pole semiconductor outputs	**4**
Switching capability	
Voltage	**24 V**
Current	**2 A**
Permitted current range	**0,000 - 2,500 A**
Residual current at "0" signal	**0,05 mA**
Max. transient pulsed current	**12 A**
Max. capacitive load	**1 µF**
Max. internal voltage drop	**500 mV**
Max. duration of off time during self test	**330 µs**
Switch-off delay	**1 ms**
Potential isolation	**yes**
Short circuit-proof	**yes**
Test pulse outputs	
Number of test pulse outputs	**4**
Voltage	**24 V**
Current	**0,1 A**
Max. duration of off time during self test	**5 ms**
Short circuit-proof	**yes**
Potential isolation	**No**

Base units
PNOZ m B0

Times	
Simultaneity in the two-hand circuit	**0,5 s**
Processing time	**30 ms**
Environmental data	
Ambient temperature	
In accordance with the standard	**EN 60068-2-14**
Temperature range	**0 - 60 °C**
Forced convection in control cabinet off	**55 °C**
Storage temperature	
In accordance with the standard	**EN 60068-2-1/-2**
Temperature range	**-25 - 70 °C**
Climatic suitability	
In accordance with the standard	**EN 60068-2-30, EN 60068-2-78**
Condensation during operation	**Not permitted**
Max. operating height above sea level	**2000 m**
EMC	**EN 61131-2**
Vibration	
In accordance with the standard	**EN 60068-2-6**
Frequency	**5 - 150 Hz**
Acceleration	**1g**
Shock stress	
In accordance with the standard	**EN 60068-2-27**
Acceleration	**15g**
Duration	**11 ms**
Airgap creepage	
In accordance with the standard	**EN 61131-2**
Overvoltage category	**II**
Pollution degree	**2**
Protection type	
In accordance with the standard	**EN 60529**
Housing	**IP20**
Terminals	**IP20**
Mounting area (e.g. control cabinet)	**IP54**
Potential isolation	
Potential isolation between	**SC output and system voltage**
Type of potential isolation	**Basic insulation**
Rated insulation voltage	**30 V**
Rated surge voltage	**2500 V**
Mechanical data	
Mounting position	**horizontally on mounting rail**

Base units
PNOZ m B0

Mechanical data	
DIN rail	
Top hat rail	**35 x 7,5 EN 50022**
Recess width	**27 mm**
Max. cable length	
Max. cable length per input	**1 km**
Sum of individual cable lengths at the test pulse output	**2 km**
Material	
Bottom	**PC**
Front	**PC**
Top	**PC**
Connection type	**Spring-loaded terminal, screw terminal**
Mounting type	**plug-in**
Conductor cross section with screw terminals	
1 core flexible	**0,25 - 2,5 mm², 24 - 12 AWG**
2 core with the same cross section, flexible without crimp connectors or with TWIN crimp connectors	**0,2 - 1,5 mm², 24 - 16 AWG**
Torque setting with screw terminals	**0,5 Nm**
Conductor cross section with spring-loaded terminals: Flexible with/without crimp connector	**0,2 - 2,5 mm², 24 - 12 AWG**
Spring-loaded terminals: Terminal points per connection	**2**
Stripping length with spring-loaded terminals	**9 mm**
Dimensions	
Height	**101,4 mm**
Width	**45 mm**
Depth	**120 mm**
Weight	**235 g**

Safety characteristic data

Unit	Operating mode	EN ISO 13849-1: 2015 PL	EN ISO 13849-1: 2015 Category	EN 62061 SIL CL	EN 62061 PFH_D [1/h]	EN ISO 13849-1: 2015 T_M [year]
Logic						
CPU	**2-channel**	**PL e**	**Cat. 4**	**SIL CL 3**	**4,74E-10**	**20**
Expansion left	–	**PL e**	**Cat. 4**	**SIL CL 3**	**3,30E-11**	**20**
Expansion right	–	**PL e**	**Cat. 4**	**SIL CL 3**	**2,79E-11**	**20**

Base units
PNOZ m B0

Input						
SC inputs	**1-channel**	**PL d**	**Cat. 2**	**SIL CL 2**	**3,85E-09**	**20**
SC inputs	**2-channel**	**PL e**	**Cat. 4**	**SIL CL 3**	**7,95E-11**	**20**
SC inputs	**2-channel**	**PL d**	**Cat. 3**	**SIL CL 2**	**1,06E-09**	**20**
SC inputs	**1-ch., pulsed light barrier**	**PL e**	**Cat. 4**	**SIL CL 3**	**3,85E-10**	**20**
Output						
SC outputs	**1-channel with advanced fault detection**	**PL e**	**Cat. 4**	**SIL CL 3**	**1,66E-11**	**20**
SC outputs	**1-channel**	**PL d**	**Cat. 2**	**SIL CL 2**	**1,57E-10**	**20**
SC outputs	**2-channel**	**PL e**	**Cat. 4**	**SIL CL 3**	**1,29E-10**	**20**

Explanatory notes for the safety-related characteristic data:

- The SIL CL value in accordance with EN 62061 corresponds to the SIL value in accordance with EN 61508.
- T_M is the maximum mission time in accordance with EN ISO 13849-1. The value also applies as the retest interval in accordance with EN 61508-6 and IEC 61511 and as the proof test interval and mission time in accordance with EN 62061.

All the units used within a safety function must be considered when calculating the safety characteristic data.

Classification according to ZVEI, CB24I

The following tables describe the classes and specific values of the product interface and the classes of interfaces compatible with it. The classification is described in the ZVEI position paper "Classification of Binary 24 V Interfaces - Functional Safety aspects covered by dynamic testing".

Input	
Interfaces	
Drain	
Interface	**Module**
Class	**C2**
Source	
Interface	**Sensor**
Class	**C2, C3**
Drain parameters	
Test pulse duration, safety outputs	**500 µs**
Min. input resistance	**5,6 kOhm**
Max. capacitive load	**126 nF**

Base units
PNOZ m B0

Single-pole output	
Interfaces	
Source	
Interface	**Module**
Class	**C2**
Drain	
Interface	**Actuator**
Class	**C1, C2**
Source parameters	
Max. test pulse duration	**330 µs**
Max. rated current	**2 A**
Max. capacitive load	**1 µF**

Supplementary data

Maximum capacitive load C (µF) with load current I (A) at the semiconductor outputs

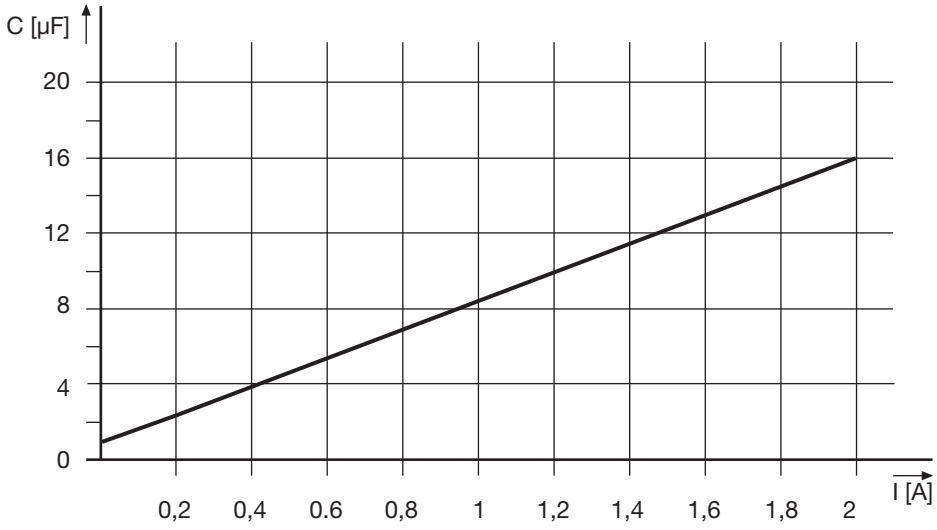

Base units
PNOZ m B0

Maximum permitted total current of the semiconductor outputs

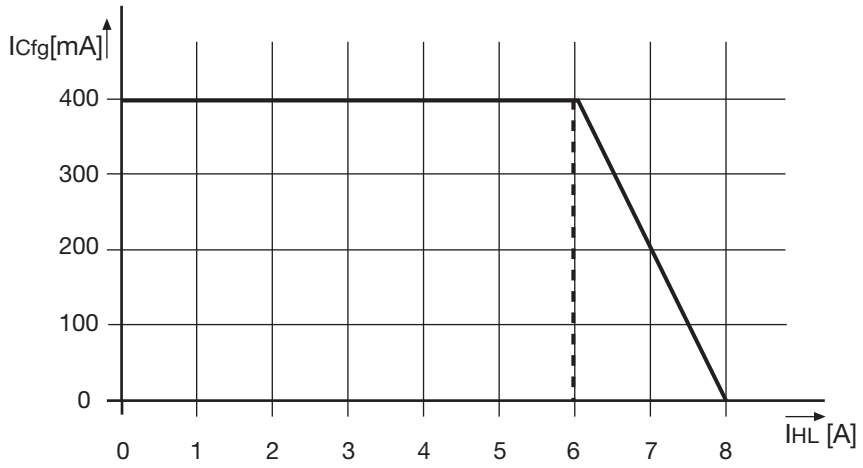

I_{Cfg}: Total current of the configurable semiconductor outputs (auxiliary outputs)

I_{HL}: Total current: Semiconductor outputs (safety outputs)

Maximum permitted humidity

Max. relative humidity, operation

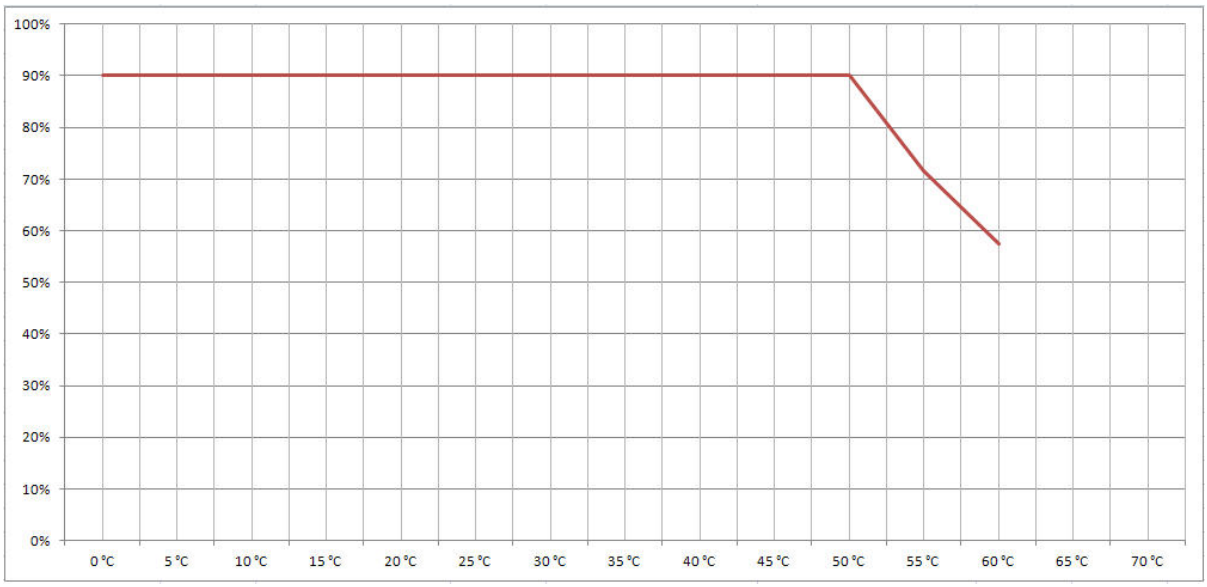

Base units
PNOZ m B0

Max. relative humidity, storage

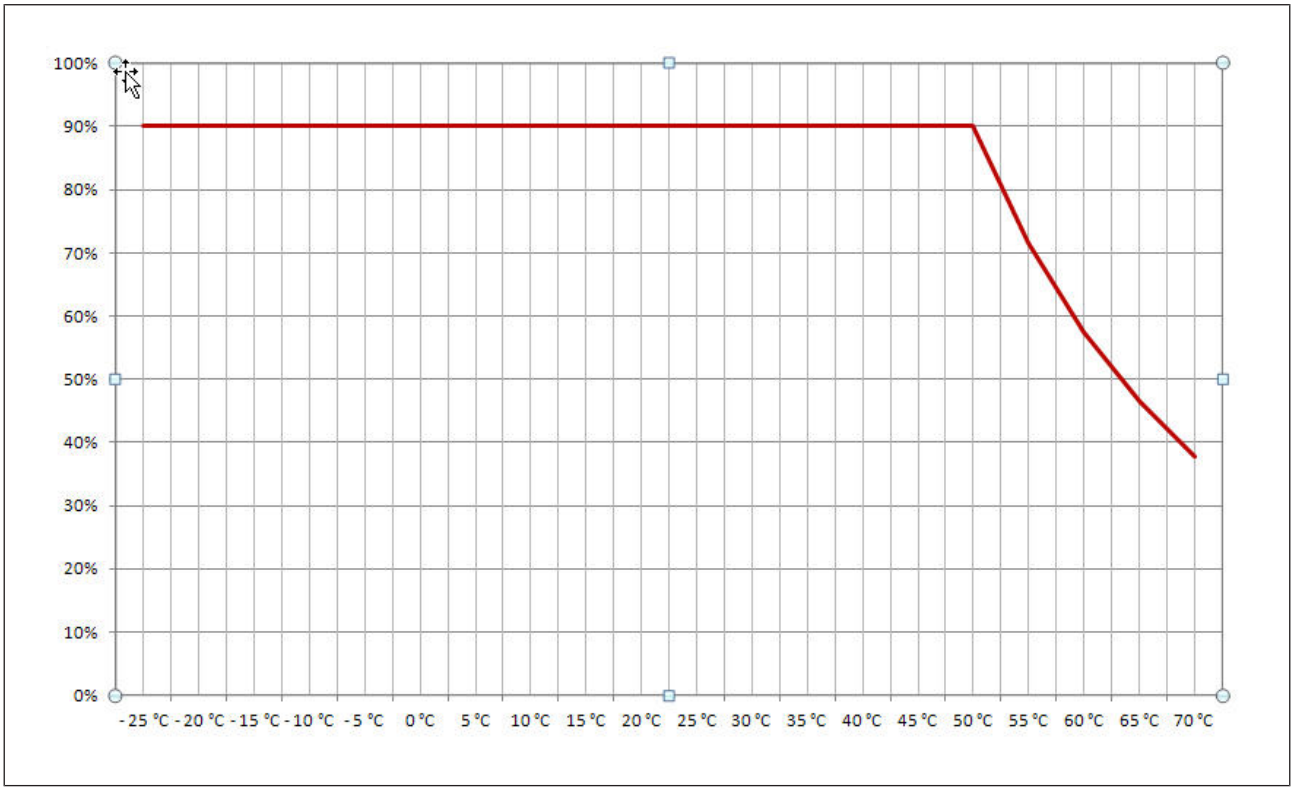

Order reference

Product

Product type	Features	Order no.
PNOZ m B0	Base unit	772 100

Accessories

Terminating plug

Product type	Features	Order no.
PNOZ mm0.xp terminator left	Terminator, black/yellow, x1	779 261

Cable

Product type	Features	Order no.
PSSu A USB-CAB03	Mini USB cable, 3 m	312 992
PSSu A USB-CAB05	Mini USB cable, 5 m	312 993

Base units
PNOZ m B0

Terminals

Product type	Features	Order no.
PNOZ s Set1 spring loaded terminals	1 set of spring-loaded terminals	751 008
PNOZ s Set1 screw terminals	1 set of screw terminals	750 008

Base units
PNOZ m B1

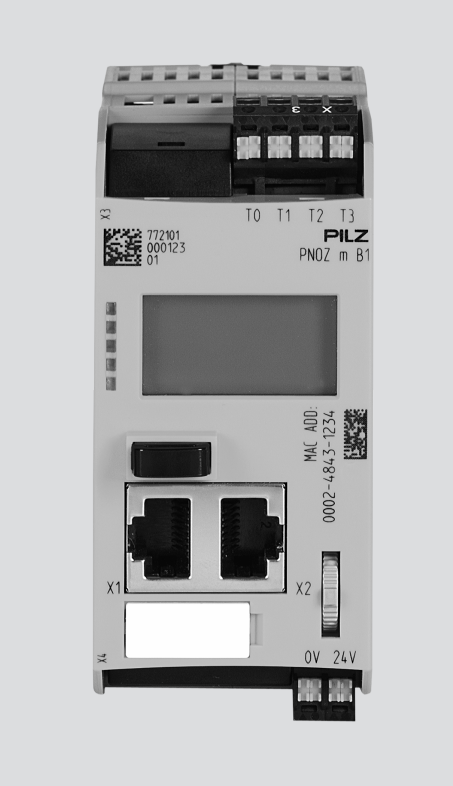

Overview

Unit features

Application of the product PNOZ m B1:

Base unit of the configurable control system PNOZmulti 2

The product has the following features:

- Can be configured in the PNOZmulti Configurator
- Support for module programs
- 4 test pulse outputs to detect shorts between the inputs
- Backlit display for:
  - Status information
  - Device information
  - Diagnostics
  - Activate project
  - Ethernet settings
  - System's date and time
  - Stop and start device

Base units
PNOZ m B1

- Multifunction switch for menu control
- Ethernet interface with switch
- LED indicator for:
  - Operating status
  - Error messages
  - Diagnostics
  - Supply voltage
- Plug-in connection terminals:
  Either spring-loaded terminal or screw terminal available as an accessory (see Order references for accessories [📖 772]).
- Expansion modules can be connected
  (please refer to the document "PNOZmulti System Expansion" for details of the type and number that can be connected)

USB memory

To save and transfer projects you need the Pilz USB memory that is supplied with the device (plugged into the device).

Base units
PNOZ m B1

Front view

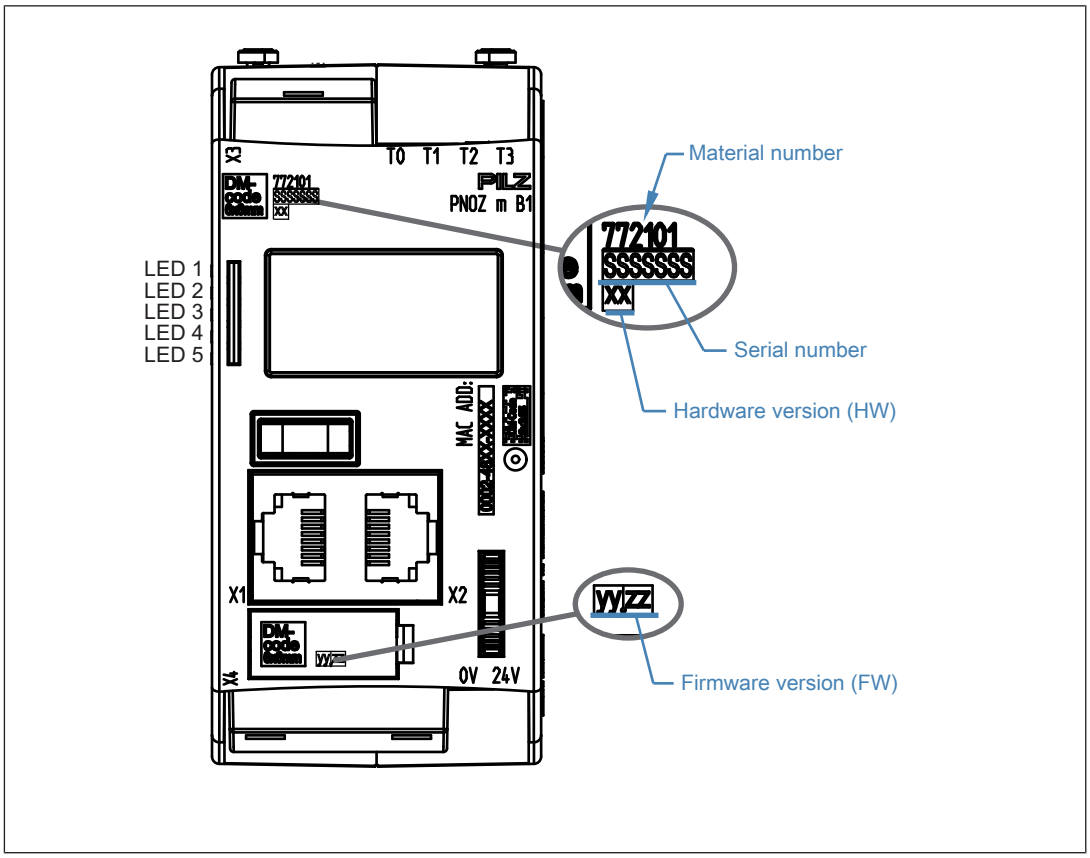

Legend

X1/X2:	Ethernet interface
X3:	Test pulse outputs T0 - T3
X4:	Labelling clip for firmware version
LED 1:	Supply voltage
LED 2	FS (Initialise/Run/Stop)
LED 3	ST (Initialise/Run/Stop)
LED 4	Diag (Project reset/Identify project)
LED 5	FAULT (IFault/OFault)

To determine the version of the device, please note:

The firmware version number is on the labelling clip. This is also the version number that must be selected in the PNOZmulti Configurator under ***Version*** during the hardware configuration.

Base units
PNOZ m B1

Function description

Functions

The function of the inputs and outputs on the control system depends on the safety circuit created using the PNOZmulti Configurator. A USB memory stick is used to download the safety circuit to the base unit. The base unit has 2 microcontrollers that monitor each other. They evaluate the input circuits on the base unit and expansion modules and switch the outputs on the expansion modules accordingly.

The LEDs on the base unit and expansion modules indicate the status of the configurable control system PNOZmulti.

The online help on the PNOZmulti Configurator contains descriptions of the operating modes and all the functions of the control system, plus connection examples.

System reaction time

Calculation of the maximum reaction time between an input switching off and a linked output in the system switching off is described in the document "PNOZmulti System Expansion [30]".

Base units
PNOZ m B1

Detection of shorts across contacts

4 test pulse outputs that use different test pulses (test pulse 0 (T0) ... test pulse 3 (T3)) are available for detecting shorts between the inputs.

Shorts between inputs are detected if the inputs are connected to different test pulses (test pulse 0 ... test pulse 3).

Pulsing of test pulse outputs T0 ... T3 (typical times):

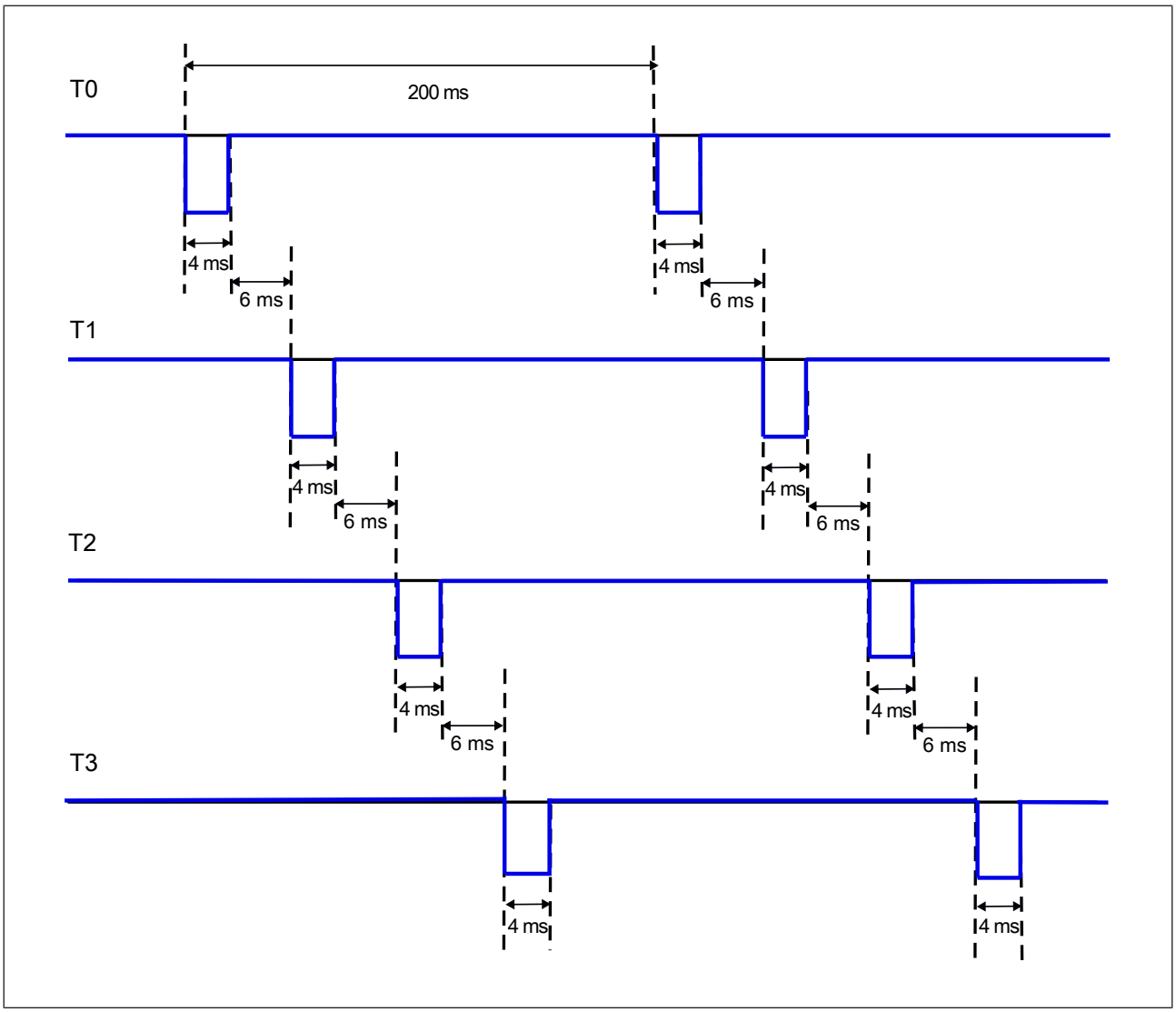

Base units
PNOZ m B1

Block diagram

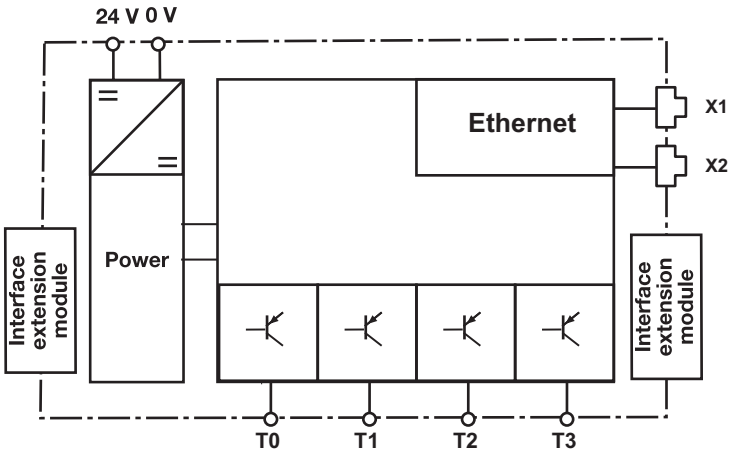

Installation

Dimensions in mm

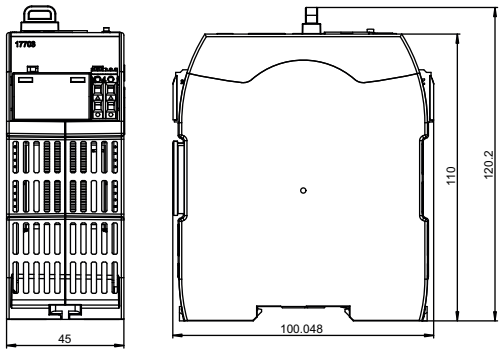

Commissioning

General wiring guidelines

The wiring is defined in the circuit diagram in the Configurator. There you can select the inputs that are to perform a safety function and the outputs that are to switch this safety function.

Please note:

- Information given in the Technical details [📖 716] must be followed.
- Use copper wiring with a temperature stability of 75 °C.

Base units
PNOZ m B1

- Adequate protection must be provided on all output contacts with inductive loads.
- The safety system and input circuits must always be supplied by a single power supply. The power supply must meet the regulations for extra low voltages with protective separation (SELV, PELV).
- Test pulse outputs are used to detect shorts between the inputs. Shorts between inputs are detected if the inputs are connected to different test pulses (test pulse 0 ... test pulse 3). Shorts between inputs of the same module with the same test pulses will not be detected.
- Test pulse outputs must exclusively be used to activate the inputs. They must not be used to drive loads.
  Do not route the test pulse lines together with actuator cables within an unprotected multicore cable.
- The maximum permitted total current of the test pulse outputs is 640 mA.

Connection

Procedure:

- Connect the supply voltage for the control system:
  - Terminal 24 V: + 24 VDC
  - Terminal 0 V: 0 V,
- Protect the supply voltage as follows:
  - Circuit breaker, characteristic C - 6 A

    or
  - Blow-out fuse, slow, 6A

Base units
PNOZ m B1

Use USB memory

Multiple projects can be stored on the USB memory that is plugged into the device. One of these can be activated and executed on the base unit.

Please note the following when using the USB memory:

- The USB memory must always be plugged in during operation.
- In order to copy projects, for example, the USB memory can be removed and plugged into the PC or into another base unit PNOZ m B1.
- Only Pilz USB memories may be used!
- Due to mechanical requirements, the USB memory is plugged firmly into the device and so may be difficult to remove.
  If this is the case, use an appropriate tool, such as a screwdriver, to carefully extract the USB memory (see illustration).
- To use the USB memory, insert the USB memory into the slot, applying light pressure. Make sure that the USB memory is inserted right up to the plastic handle (see illustration).

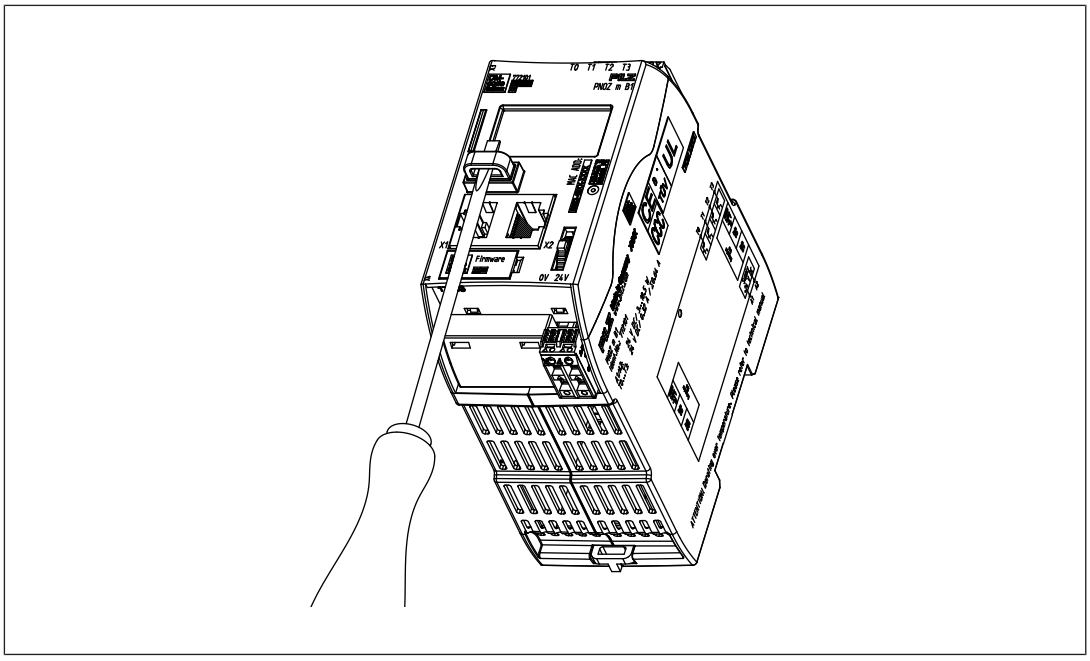

Load project from PNOZmulti Configurator

Projects can be transferred from the PNOZmulti Confgurator to the USB memory. Several projects may be stored on the USB memory, A project can be activated directly. This can be performed in the Project Manager of the PNOZmulti Configurator (see online help for the PNOZmulti Configurator).

Procedure:

- Connect the computer containing the PNOZmulti Configurator to the base unit PNOZ m B1 via the Ethernet interface.
- Make sure that the USB memory is plugged into the base unit PNOZ m B1.
- Switch on the supply voltage.
- Transfer the required project to the USB memory and activate it on the base unit via the Project Manager on the PNOZmulti Configurator, as described in the online help for the PNOZmulti Configurator.
- As the project is loaded, the base unit must be stopped and then restarted.
- Once the project has been loaded successfully and the device has been restarted, the status of the supply voltage is shown on the display. The "RUN" LED is lit.

Activate project via the display on the base unit

A project that is stored on the USB memory can be activated in the base unit via settings on the display.

Procedure:

- Make sure that the USB memory containing the current project is plugged into the base unit PNOZ m B1.
- Switch on the supply voltage.
- Stop the device via the multifunction switch on the display via the menu setting ***System mode*** -> ***Stop system*** (for details of how to navigate the display see the section entitled Display settings [📖 705])
- In the ***Project*** menu, navigate to the folder containing the required project and select the project file with the extension ***.mpnoz2***.
- Load the project by pressing the multifunction switch and restart via the menu setting ***System mode*** -> ***Restart system***.

Display settings

Various settings can be made and information displayed via the menu on the device's display.

Operate menu

The menu settings are made on the device's display via a multifunction switch. You can switch between the menu levels by pressing or turning the multifunction switch.

Base units
PNOZ m B1

Press multifunction switch



- Confirm selection/setting
- Switch to sub-menu
- Exit menu: **\..**

Move multifunction switch up or down



- Select menu

Displays and settings

The LC display has five lines. Information is shown on the display and settings can be made.
The field at the top right of the display shows information about the connection and instructions for the menu settings:

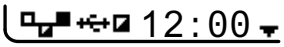

Legend:

	Network connection/traffic
	USB memory inserted
12:00	System time
	Press the multifunction switch to go back to the higher level menu
	Press the multifunction switch to access the sub-menu
4	Hold the multifunction switch down for 4 s to confirm the selection or perform the action
i	Press the multifunction switch to obtain information
	Press the multifunction switch to call up the system message
	Press the multifunction switch to call up the user message

Base units
PNOZ m B1

Status indicators

Display	Display	Description
Permanent display	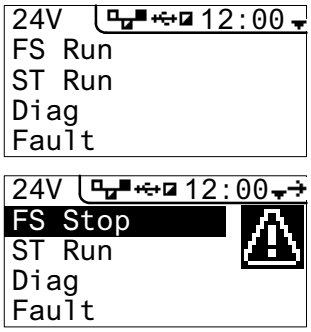	LED display ▸ A warning symbol shows that a message is present, which can be called up
System / User... System or display messages	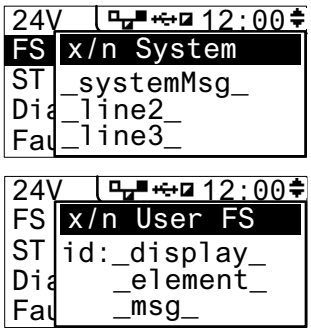	⚠ System message is present or ⚠ User message is present (user-specific messages that are created in the PNOZmulti Configurator)

Project menu

In the ***Project*** menu you can display information about the project that is activated on the device. You can also activate a different project from the USB memory on the device. See also Activate project via the display on the base unit [📖 705] and reset the project on the device.

Display	Display	Description
Info:	Project 4 \.. Info History	Information is displayed about the project activated on the device
Name Project name	Project Name: _programname_	Name of project
Date / Time Creation data and time	Project Date / Time: 2014-01-31 08:45	Date and time that the project was created
Check sums FS Overall check sum and check sums of main program	Project Checksums FS: total AB08 safe F080 without L3 F080	Display of check sums: ▸ Overall project check sum ▸ Check sum safe of main program ▸ Check sum safe of main program without level 3
Check sums DP pos x Check sums of module program	DP pos x Checksums: safe F108 without L3 AB80 ↕ DP pos y Checksums: safe F108 without L3 AB80	Display of check sums of module program ▸ Check sum safe ▸ Check sum safe without level 3
History: Project history	Project Info History Select	Project information is displayed for one of the last 16 projects activated

Base units
PNOZ m B1

Display	Display	Description
Name **Date / Time** **Check sum FS** **Check sum DP pos x** **...**	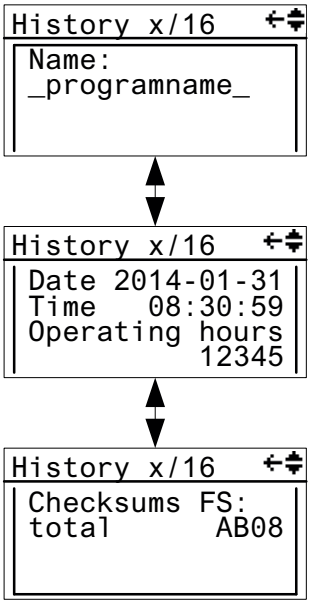	Display of project information for a selected project
Select: Activate project	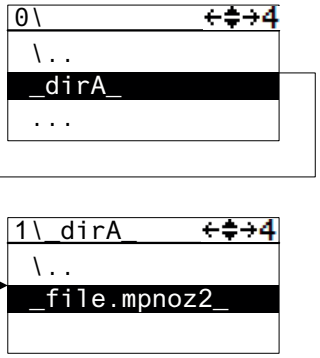	Select project contained in the USB memory and activate it on the base unit ▸ Prerequisite: Device must be stopped ▸ Hold down multifunction switch for 4 s in order to activate the project
Reset: Reset or update project.	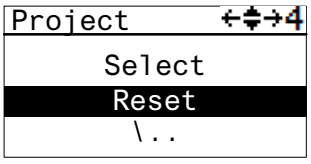	After a reset, the active project is reloaded from the USB memory ▸ Prerequisite: Device must be stopped ▸ Hold down multifunction switch for 4 s in order to reset

Base units
PNOZ m B1

Device Info menu

Display	Example	Description
Device Info	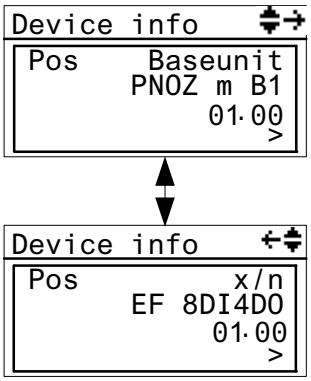	Information on the base unit and expansion modules. Overview: ▸ Position/slot ▸ Device type ▸ Firmware version
Device information for module	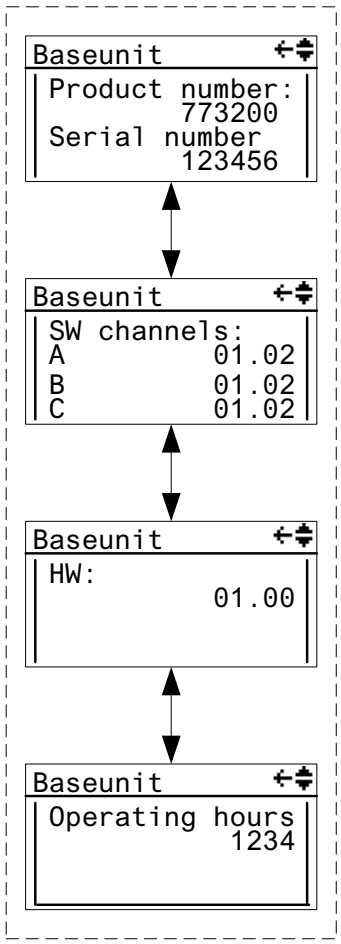	Show device information for a selected module: ▸ Order number ▸ Serial number ▸ Software versions ▸ Hardware version ▸ Operating hours

Base units
PNOZ m B1

Error Stack menu

Display	Example	Description
Error stack	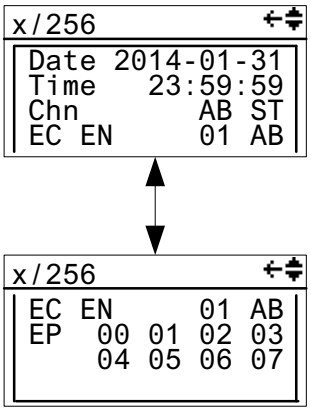	Display of entries in the error stack (see also section entitled Show error stack on the display To read the error stack entries please refer to the document ***PNOZmulti Error Messages***

Operating Info menu

Display	Example	Description
Operating Info	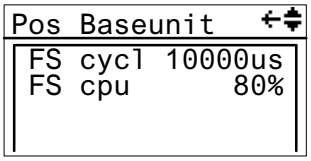	Display of specific operating parameters for the base unit and expansion modules. e.g.: cycle time, operating temperature, frequencies

Connections menu

In the ***Connections*** menu the connections to the PNOZmulti can be displayed.

Base units
PNOZ m B1

Display	Example	Description
Conn. x/n	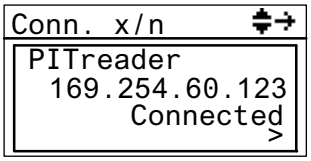	Information on the connected device: ▸ Device ▸ IP address ▸ Connection status: – Connected: Connected – Connecting: Connecting – Failed: Connection has failed – Error: Error in the connection
PITreader	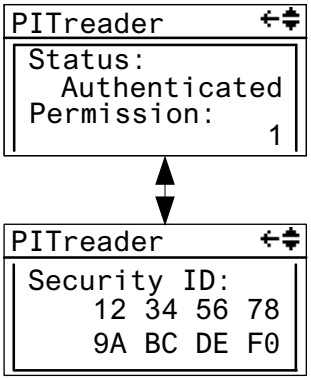	**Status information on PITreader:** ▸ Status: – Authenticated: PITreader detected the transponder key. Permission exists – No key: There is no transponder key inserted in PITreader – No permission: The transponder key has no permission (permission = 0) – Auth. failed: Authentication has failed. The data from PITreader are invalid – Not ready: The connection to PITreader is interrupted. ▸ Permission: Permission 1… 64 of the transponder key **Security ID:** Safety identifier of the transponder key

Ethernet menu

The Ethernet configuration can be displayed and changed in the ***Ethernet*** menu.

Display	Example	Description
Information	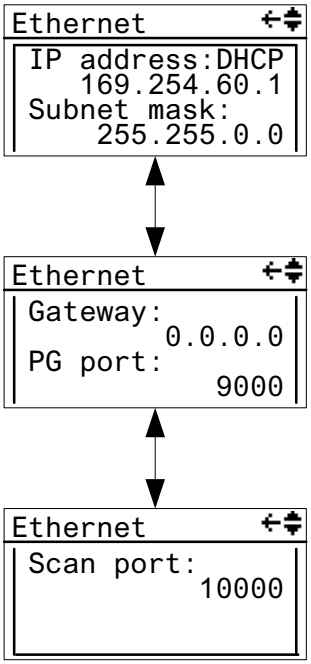	Display of the current Ethernet configuration
Change	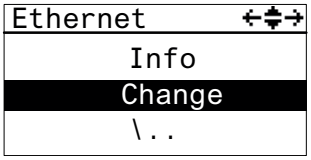	Change Ethernet configuration...
Edit IP Change IP address		▸ IP address ▸ Subnet mask ▸ Gateway Adjust -> Hold down multifunction switch for 2 s in order to access change mode
Edit ports Change IP address	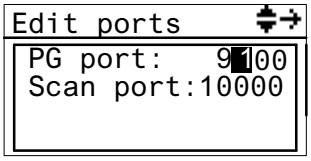	Adjust PG port and scan port -> Hold down multifunction switch for 2 s in order to access change mode
Use DHCP Change IP address	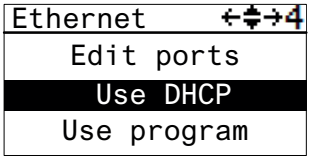	Obtain IP address automatically from the network (prerequisite: Network has a DHCP Server utility) -> Hold down multifunction switch for 2 s in order to perform the action

Base units
PNOZ m B1

Display	Example	Description
Use program Change IP address	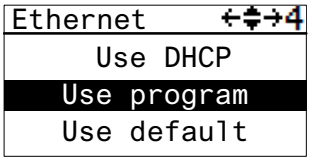	Load Ethernet settings from the active PNOZmulti project -> Hold down multifunction switch for 2 s in order to perform the action
Use default Change IP address	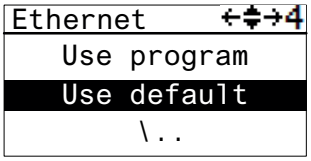	Load default settings IP address: 169.254.60.1 Subnet mask: 255.255.0.0 Gateway: 0.0.0.0 -> Hold down multifunction switch for 2 s in order to perform the action

Time menu

Display	Example	Description
Time Show date and time	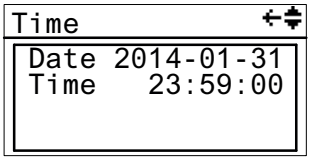	Show system's date and time
Set time Set date and time	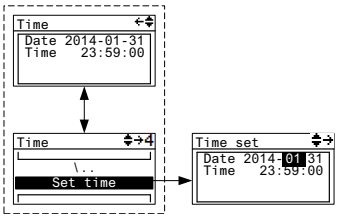	Change date and time -> Hold down multifunction switch for 2 s in order to access change mode

System mode menu

Display	Example	Description
Stop system **Restart system**	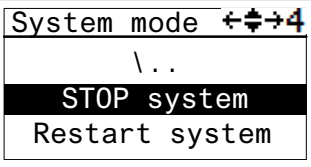	Stop system Restart system -> Hold down multifunction switch for 4 s in order to perform the actions

Base units
PNOZ m B1

Technical details

General	
Certifications	**CE, EAC (Eurasian), KOSHA, TÜV, cULus Listed**
Application range	**Failsafe**
Electrical data	
Supply voltage	
for	**Supply to the system**
Voltage	**24 V**
Kind	**DC**
Voltage tolerance	**-20 %/+25 %**
Output of external power supply (DC)	**18,5 W**
Output of external power supply (DC) at no load	**3 W**
Max. power dissipation of module	**4,5 W**
Status indicator	**Display, LED**
Test pulse outputs	
Number of test pulse outputs	**4**
Voltage	**24 V**
Current	**0,32 A**
Max. duration of off time during self test	**4 ms**
Short circuit-proof	**yes**
Potential isolation	**No**
Ethernet interface	
Number	**2**
IP address (automatically off)	**169.254.60.1**
Connection type	**RJ45**
Transmission rate	**10 MBit/s, 100 MBit/s**
Times	
Simultaneity in the two-hand circuit	**0,5 s**
Processing time	**30 ms**
Environmental data	
Ambient temperature	
In accordance with the standard	**EN 60068-2-14**
Temperature range	**0 - 60 °C**
Forced convection in control cabinet off	**55 °C**
Storage temperature	
In accordance with the standard	**EN 60068-2-1/-2**
Temperature range	**-25 - 70 °C**

Base units
PNOZ m B1

Environmental data	
Climatic suitability	
In accordance with the standard	**EN 60068-2-30, EN 60068-2-78**
Humidity	**93 % r. h. at 40 °C**
Condensation during operation	**Not permitted**
Max. operating height above sea level	**2000 m**
EMC	**EN 61131-2**
Vibration	
In accordance with the standard	**EN 60068-2-6**
Frequency	**5 - 150 Hz**
Acceleration	**1g**
Shock stress	
In accordance with the standard	**EN 60068-2-27**
Duration	**11 ms**
Airgap creepage	
In accordance with the standard	**EN 61131-2**
Overvoltage category	**II**
Pollution degree	**2**
Protection type	
In accordance with the standard	**EN 60529**
Housing	**IP20**
Terminals	**IP20**
Mounting area (e.g. control cabinet)	**IP54**
Mechanical data	
Mounting position	**horizontally on mounting rail**
DIN rail	
Top hat rail	**35 x 7,5 EN 50022**
Recess width	**27 mm**
Max. cable length	
Sum of individual cable lengths at the test pulse output	**2 km**
Material	
Bottom	**PC**
Front	**PC**
Top	**PC**
Connection type	**Cage clamp terminal, screw terminal**
Mounting type	**plug-in**
Conductor cross section with screw terminals	
1 core flexible	**0,25 - 2,5 mm², 24 - 12 AWG**
2 core with the same cross section, flexible without crimp connectors or with TWIN crimp connectors	**0,2 - 1,5 mm², 24 - 16 AWG**
Torque setting with screw terminals	**0,5 Nm**

Base units
PNOZ m B1

Mechanical data	
Conductor cross section with spring-loaded terminals: Flexible with/without crimp connector	**0,2 - 2,5 mm², 24 - 12 AWG**
Spring-loaded terminals: Terminal points per connection	**2**
Stripping length with spring-loaded terminals	**9 mm**
Dimensions	
Height	**101,4 mm**
Width	**45 mm**
Depth	**120,2 mm**
Weight	**209 g**

Where standards are undated, the 2018-07 latest editions shall apply.

Safety characteristic data

Operating mode	EN ISO 13849-1: 2015 PL	EN ISO 13849-1: 2015 Category	EN 62061 SIL CL	EN 62061 PFH_D [1/h]	IEC 61511 SIL	IEC 61511 PFD	EN ISO 13849-1: 2015 T_M [year]
2-channel	**PL e**	**Cat. 4**	**SIL CL 3**	**4,19E-10**	**SIL 3**	**3,65E-05**	**20**

Explanatory notes for the safety-related characteristic data:

- The SIL CL value in accordance with EN 62061 corresponds to the SIL value in accordance with EN 61508.
- T_M is the maximum mission time in accordance with EN ISO 13849-1. The value also applies as the retest interval in accordance with EN 61508-6 and IEC 61511 and as the proof test interval and mission time in accordance with EN 62061.

All the units used within a safety function must be considered when calculating the safety characteristic data.

Base units
PNOZ m B1

Order reference

Product

Product type	Features	Order No.
PNOZ m B1	Base unit	772 101

Accessories

Connector

Product type	Features	Order no.
PNOZ mm0.xp terminator left	Terminator, black/yellow, x1	779 261
RJ45 Connector	8-pin RJ45 male connector, straight, Cat 6a	380 401

Connection terminals

Product type	Features	Order no.
Set4 Spring Terminals	1 set of spring-loaded terminals	751016
Set4 Screw Terminals	1 set of screw terminals	750016

Jumper

Product type	Features	Order no.
USB Memory 512MB	Pilz USB memory, 512 MB	779213

Base units
PNOZ m B1 Burner

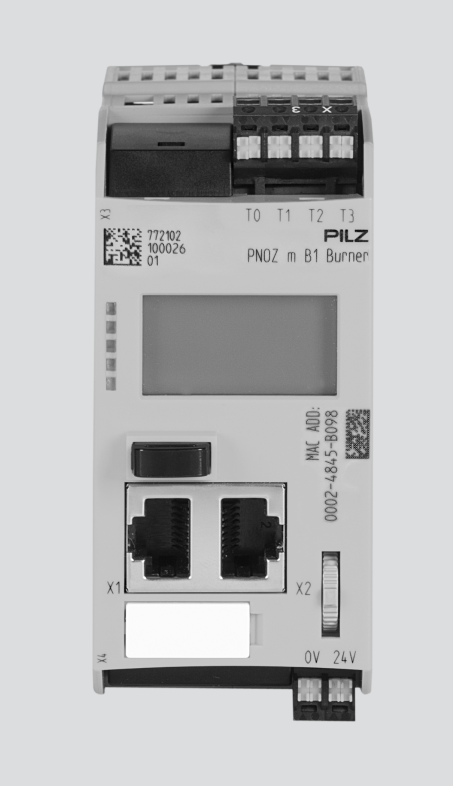

Overview

Unit features

Application of the product m B1 Burner:

Base unit of the configurable control system PNOZmulti 2

The product has the following features:

- Can be configured in the PNOZmulti Configurator
- Designed to monitor and control furnaces
- Support for module programs
- 4 test pulse outputs to detect shorts between the inputs
- Backlit display for:
  - Status information
  - Unit information
  - Diagnostics
  - Activate project
  - Ethernet settings
  - System's date and time

  - Stop and start device
- Multifunction switch for menu control
- Ethernet interface with switch
- LED display for:
  - Operating status
  - Error messages
  - Diagnostics
  - Supply voltage
- Plug-in connection terminals:
  Either spring-loaded terminal or screw terminal available as an accessory (see Order references for accessories [📖 772]).
- Expansion modules can be connected
  (please refer to the document "PNOZmulti System Expansion" for details of the type and number that can be connected)

USB memory

To save and transfer projects you need the Pilz USB memory that is supplied with the device (plugged into the device).

Base units
PNOZ m B1 Burner

Front view

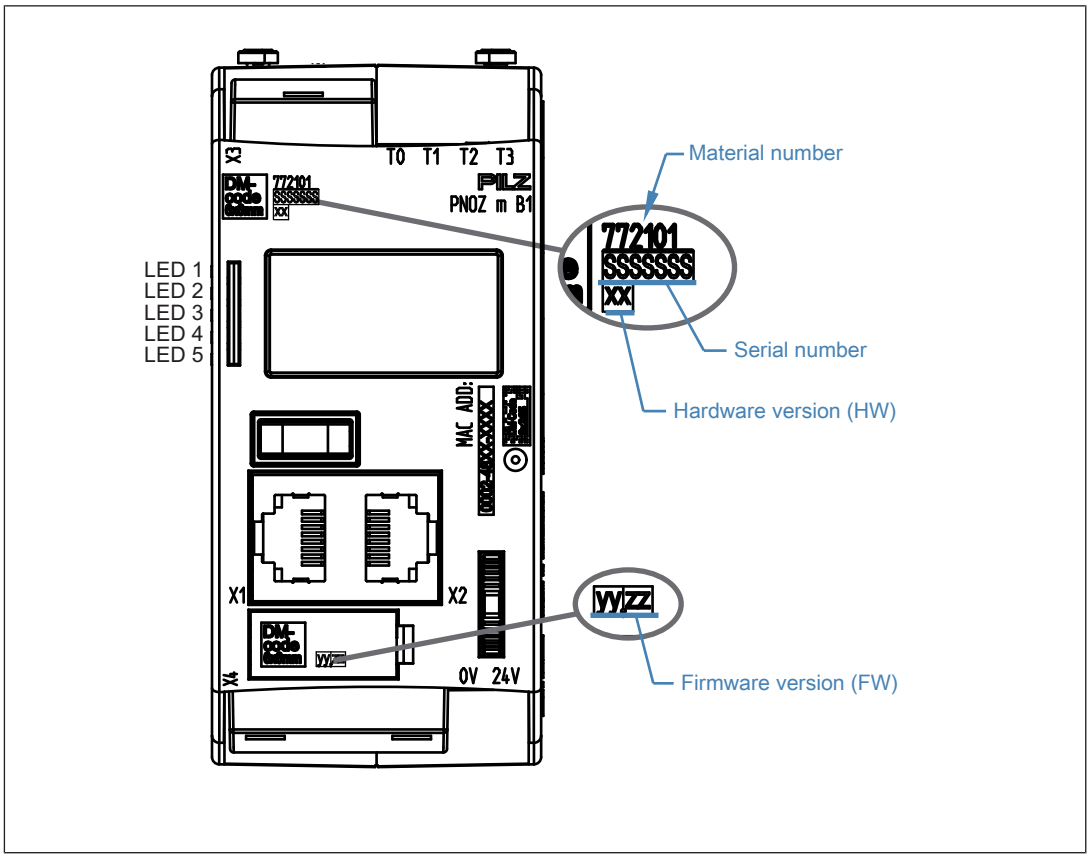

Legend

X1/X2:	Ethernet interface
X3:	Test pulse outputs T0 - T3
X4:	Labelling clip for firmware version
LED 1:	Supply voltage
LED 2	FS (Initialise/Run/Stop)
LED 3	ST (Initialise/Run/Stop)
LED 4	Diag (Project reset/Identify project)
LED 5	FAULT (IFault/OFault)

To determine the version of the device, please note:

The firmware version number is on the labelling clip. This is also the version number that must be selected in the PNOZmulti Configurator under ***Version*** during the hardware configuration.

Base units
PNOZ m B1 Burner

Function description

Functions

The function of the inputs and outputs on the control system depends on the safety circuit created using the PNOZmulti Configurator. A USB memory stick is used to download the safety circuit to the base unit. The base unit has 2 microcontrollers that monitor each other. They evaluate the input circuits on the base unit and expansion modules and switch the outputs on the expansion modules accordingly.

The LEDs on the base unit and expansion modules indicate the status of the configurable control system PNOZmulti.

The online help on the PNOZmulti Configurator contains descriptions of the operating modes and all the functions of the control system, plus connection examples.

Application for furnaces

The base unit m B1 Burner is designed for controlling and monitoring furnaces (see online help for the PNOZmulti Configurator).

These include:

Monitoring:

- Safety chains
- Combustion air pressure
- Ignition
- Flame monitoring
- External compound controller
- Tightness control

and controlling:

- Safety valves
- Ignition valves
- Vent valve
- Ignition
- External compound controller
- Combustion air blower

The following oil and gas burner types can be monitored:

- Master burner with direct ignition
- Master burner with indirect ignition and joint flame monitoring
- Master burner with indirect ignition and separate flame monitoring
- Slave burner with direct ignition
- Slave burner with indirect ignition and joint flame monitoring
- Slave burner with indirect ignition and separate flame monitoring

System reaction time

Calculation of the maximum reaction time between an input switching off and a linked output in the system switching off is described in the document "PNOZmulti System Expansion [📖 30]".

Base units
PNOZ m B1 Burner

Detection of shorts across contacts

4 test pulse outputs that use different test pulses (test pulse 0 (T0) ... test pulse 3 (T3)) are available for detecting shorts between the inputs.

Shorts between inputs are detected if the inputs are connected to different test pulses (test pulse 0 ... test pulse 3).

Pulsing of test pulse outputs T0 ... T3 (typical times):

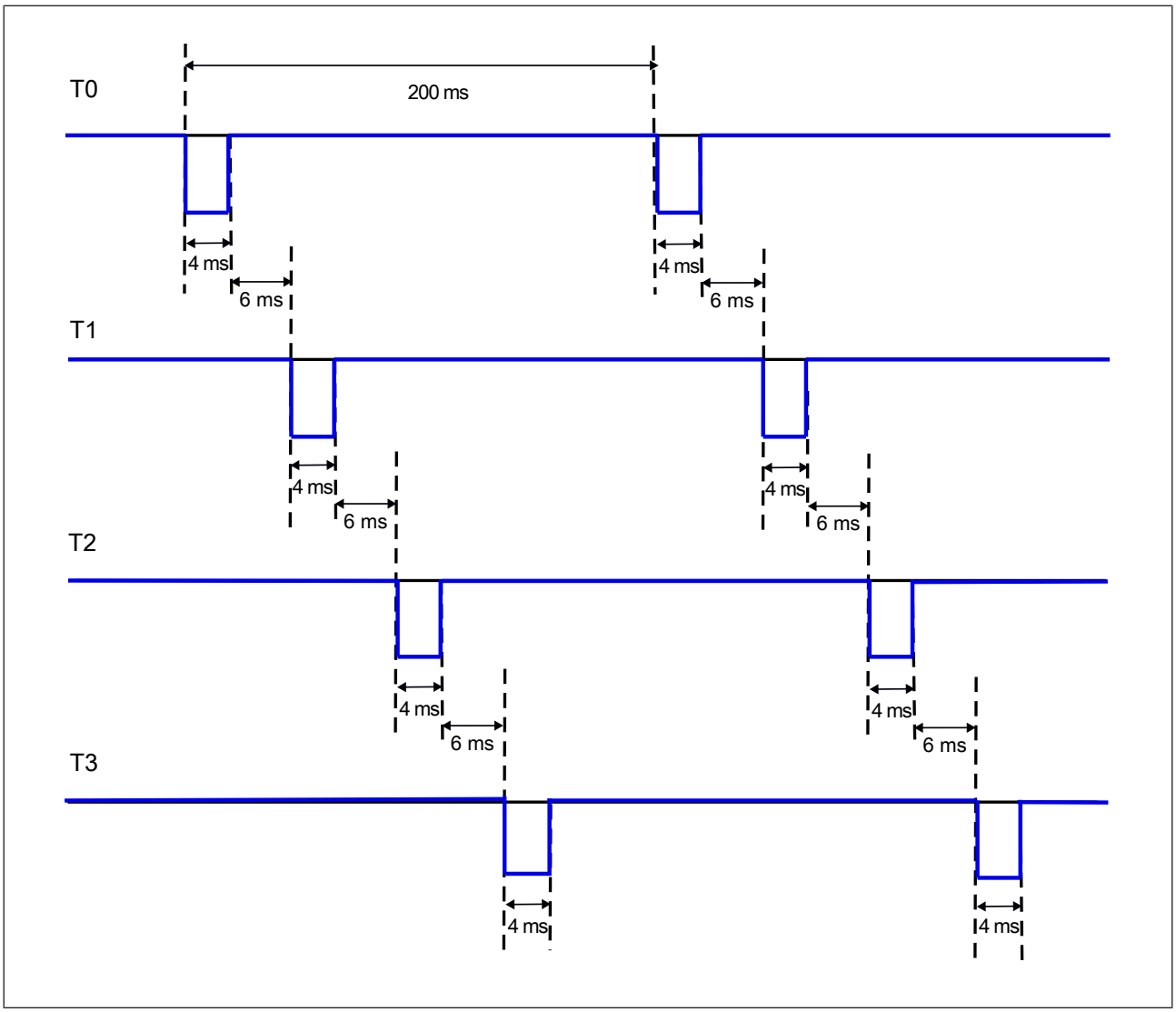

Base units
PNOZ m B1 Burner

Block diagram

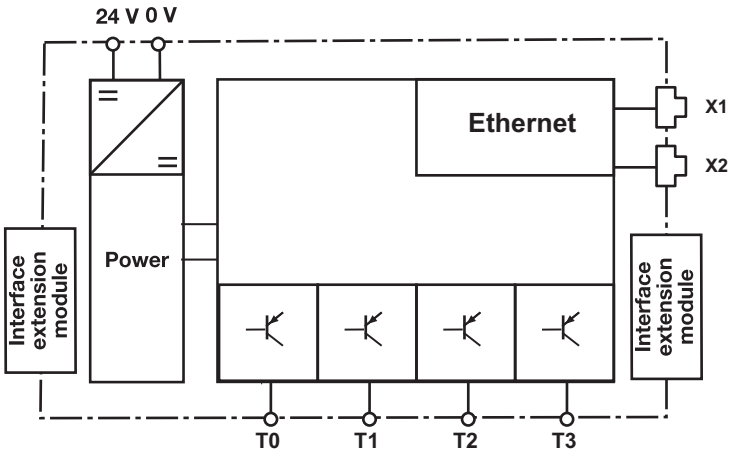

Installation

Dimensions in mm

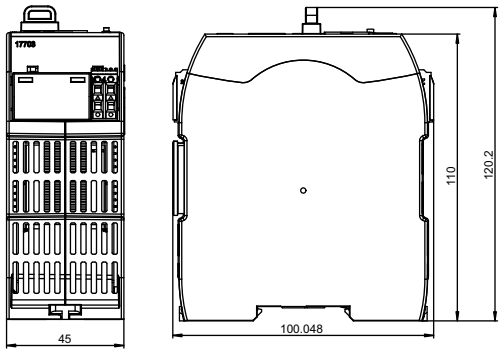

Commissioning

General wiring guidelines

The wiring is defined in the circuit diagram in the Configurator. There you can select the inputs that are to perform a safety function and the outputs that are to switch this safety function.

Please note:

- Information given in the Technical details [📖 740] must be followed.
- Use copper wiring with a temperature stability of 75 °C.

Base units
PNOZ m B1 Burner

- Adequate protection must be provided on all output contacts with inductive loads.
- The safety system and input circuits must always be supplied by a single power supply. The power supply must meet the regulations for extra low voltages with protective separation (SELV, PELV).
- Test pulse outputs are used to detect shorts between the inputs. Shorts between inputs are detected if the inputs are connected to different test pulses (test pulse 0 ... test pulse 3). Shorts between inputs of the same module with the same test pulses will not be detected.
- Test pulse outputs must exclusively be used to activate the inputs. They must not be used to drive loads.
  Do not route the test pulse lines together with actuator cables within an unprotected multicore cable.
- The maximum permitted total current of the test pulse outputs is 640 mA.

Connection

Procedure:

- Connect the supply voltage for the control system:
  - Terminal 24 V: + 24 VDC
  - Terminal 0 V: 0 V,
- Protect the supply voltage as follows:
  - Circuit breaker, characteristic C - 6 A

    or
  - Blow-out fuse, slow, 6A

Use USB memory

Multiple projects can be stored on the USB memory that is plugged into the device. One of these can be activated and executed on the base unit.

Please note the following when using the USB memory:

- The USB memory must always be plugged in during operation.
- In order to copy projects, for example, the USB memory can be removed and plugged into the PC or into another base unit m B1 Burner.
- Only Pilz USB memories may be used!
- Due to mechanical requirements, the USB memory is plugged firmly into the device and so may be difficult to remove.
  If this is the case, use an appropriate tool, such as a screwdriver, to carefully extract the USB memory (see illustration).
- To use the USB memory, insert the USB memory into the slot, applying light pressure. Make sure that the USB memory is inserted right up to the plastic handle (see illustration).

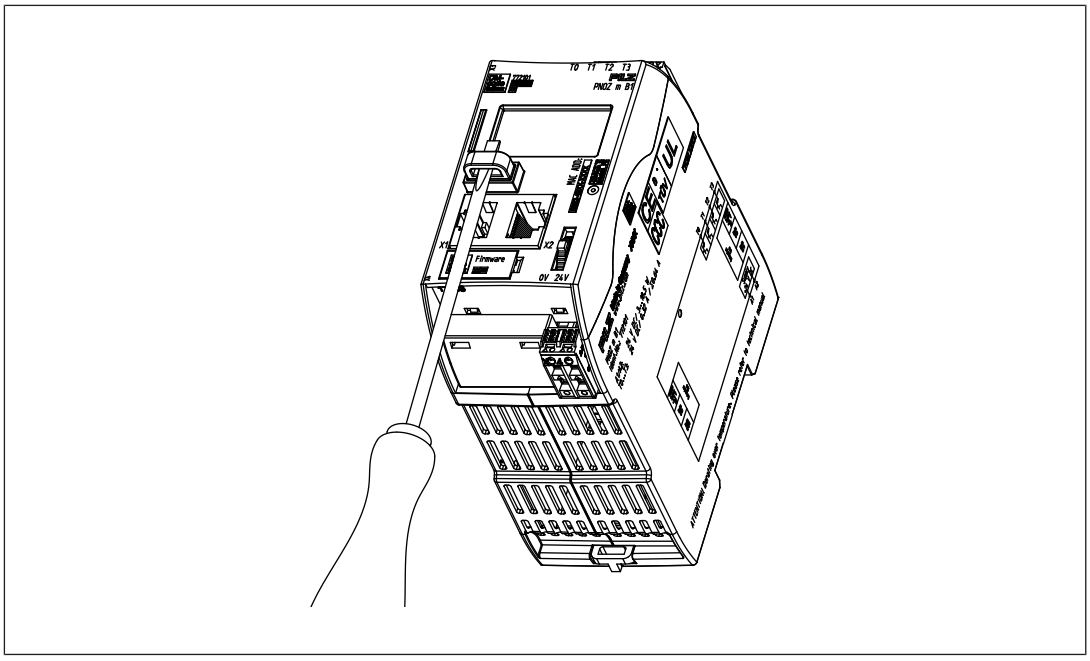

Load project from PNOZmulti Configurator

Projects can be transferred from the PNOZmulti Confgurator to the USB memory. Several projects may be stored on the USB memory, A project can be activated directly. This can be performed in the Project Manager of the PNOZmulti Configurator (see online help for the PNOZmulti Configurator).

Procedure:

- Connect the computer containing the PNOZmulti Configurator to the base unit m B1 Burner via the Ethernet interface.

- Make sure that the USB memory is plugged into the base unit m B1 Burner.
- Switch on the supply voltage.
- Transfer the required project to the USB memory and activate it on the base unit via the Project Manager on the PNOZmulti Configurator, as described in the online help for the PNOZmulti Configurator.
- As the project is loaded, the base unit must be stopped and then restarted.
- Once the project has been loaded successfully and the device has been restarted, the status of the supply voltage is shown on the display. The "RUN" LED is lit.

Activate project via the display on the base unit

A project that is stored on the USB memory can be activated in the base unit via settings on the display.

Procedure:

- Make sure that the USB memory containing the current project is plugged into the base unit m B1 Burner.
- Switch on the supply voltage.
- Stop the device via the multifunction switch on the display via the menu setting ***System mode*** -> ***Stop system*** (for details of how to navigate the display see the section entitled Display settings [📖 705])
- In the ***Project*** menu, navigate to the folder containing the required project and select the project file with the extension ***.mpnoz2***.
- Load the project by pressing the multifunction switch and restart via the menu setting ***System mode*** -> ***Restart system***.

Display settings

Various settings can be made and information displayed via the menu on the device's display.

Operate menu

The menu settings are made on the device's display via a multifunction switch. You can switch between the menu levels by pressing or turning the multifunction switch.

Press multifunction switch



- Confirm selection/setting
- Switch to sub-menu
- Exit menu: **\..**

Base units
PNOZ m B1 Burner

Move multifunction switch up or down



- Select menu

Displays and settings

The LC display has five lines. Information is shown on the display and settings can be made.
The field at the top right of the display shows information about the connection and instructions for the menu settings:

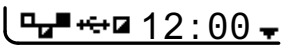

Legend:

	Network connection/traffic
	USB memory inserted
12:00	System time
	Press the multifunction switch to go back to the higher level menu
	Press the multifunction switch to access the sub-menu
4	Hold the multifunction switch down for 4 s to confirm the selection or perform the action
i	Press the multifunction switch to obtain information
	Press the multifunction switch to call up the system message
	Press the multifunction switch to call up the user message

Base units
PNOZ m B1 Burner

Status indicators

Display	Display	Description
Permanent display	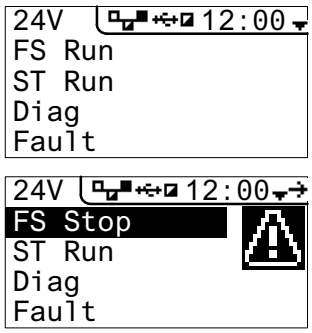	LED display ▸ A warning symbol shows that a message is present, which can be called up
System / User... System or display messages	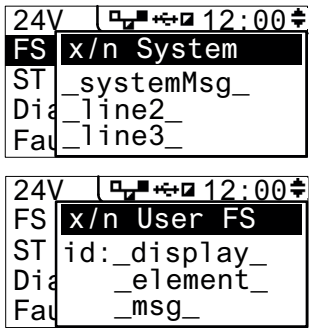	⚠ System message is present or ⚠ User message is present (user-specific messages that are created in the PNOZmulti Configurator)

Project menu

In the ***Project*** menu you can display information about the project that is activated on the device. You can also activate a different project from the USB memory on the device. See also Activate project via the display on the base unit [📖 729] and reset the project on the device.

Display	Display	Description
Info:	Project \.. Info History	Information is displayed about the project activated on the device
Name Project name	Project Name: _programname_	Name of project
Date / Time Creation data and time	Project Date / Time: 2014-01-31 08:45	Date and time that the project was created
Check sums FS Overall check sum and check sums of main program	Project Checksums FS: total AB08 safe F080 without L3 F080	Display of check sums: ▸ Overall project check sum ▸ Check sum safe of main program ▸ Check sum safe of main program without level 3
Check sums DP pos x Check sums of module program	DP pos x Checksums: safe F108 without L3 AB80 ↕ DP pos y Checksums: safe F108 without L3 AB80	Display of check sums of module program ▸ Check sum safe ▸ Check sum safe without level 3
History: Project history	Project Info History Select	Project information is displayed for one of the last 16 projects activated

Base units
PNOZ m B1 Burner

Display	Display	Description
Name **Date / Time** **Check sum FS** **Check sum DP pos x** **...**	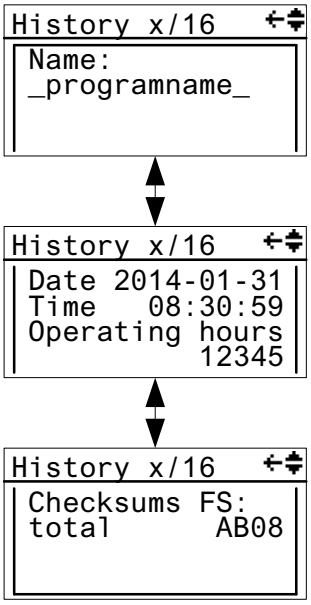	Display of project information for a selected project
Select: Activate project	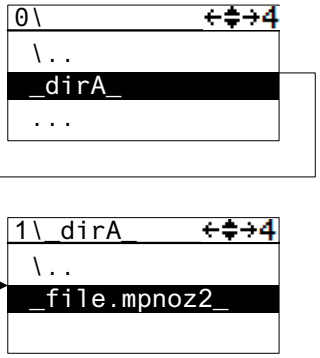	Select project contained in the USB memory and activate it on the base unit ▸ Prerequisite: Device must be stopped ▸ Hold down multifunction switch for 4 s in order to activate the project
Reset: Reset or update project.	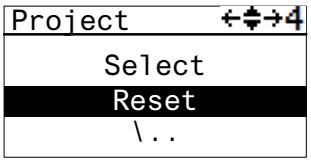	After a reset, the active project is reloaded from the USB memory ▸ Prerequisite: Device must be stopped ▸ Hold down multifunction switch for 4 s in order to reset

Base units
PNOZ m B1 Burner

Device Info menu

Display	Example	Description
Device Info	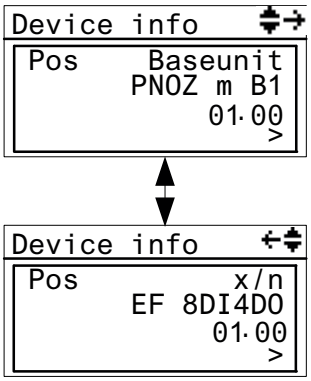	Information on the base unit and expansion modules. Overview: ▸ Position/slot ▸ Device type ▸ Firmware version
Device information for module	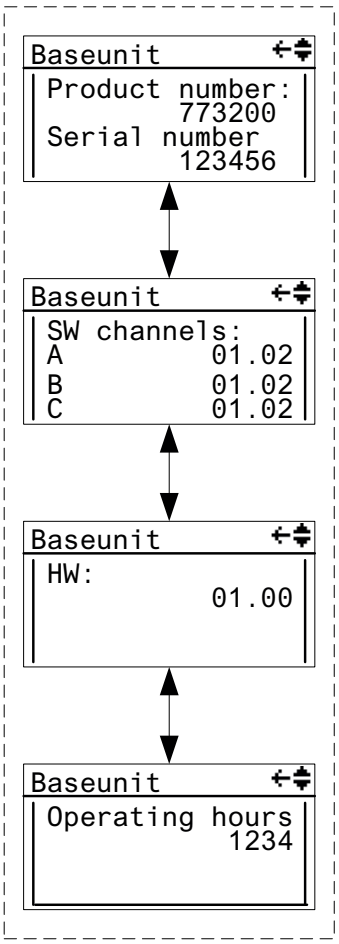	Show device information for a selected module: ▸ Order number ▸ Serial number ▸ Software versions ▸ Hardware version ▸ Operating hours

Base units
PNOZ m B1 Burner

Error Stack menu

Display	Example	Description
Error stack	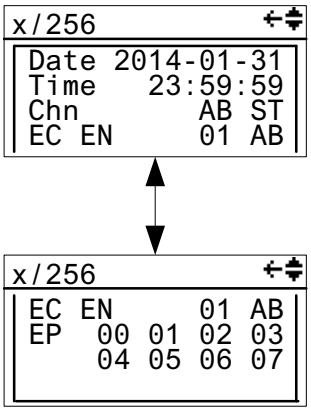	Display of entries in the error stack (see also section entitled Show error stack on the display To read the error stack entries please refer to the document ***PNOZmulti Error Messages***

Operating Info menu

Display	Example	Description
Operating Info	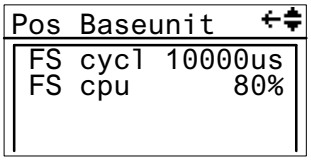	Display of specific operating parameters for the base unit and expansion modules. e.g.: cycle time, operating temperature, frequencies

Connections menu

In the ***Connections*** menu the connections to the PNOZmulti can be displayed.

Base units
PNOZ m B1 Burner

Display	Example	Description
Conn. x/n	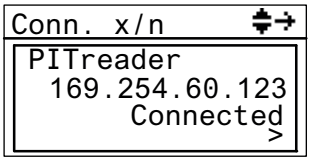	Information on the connected device: ▸ Device ▸ IP address ▸ Connection status: – Connected: Connected – Connecting: Connecting – Failed: Connection has failed – Error: Error in the connection
PITreader	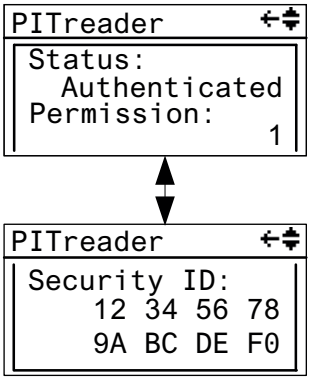	**Status information on PITreader:** ▸ Status: – Authenticated: PITreader detected the transponder key. Permission exists – No key: There is no transponder key inserted in PITreader – No permission: The transponder key has no permission (permission = 0) – Auth. failed: Authentication has failed. The data from PITreader are invalid – Not ready: The connection to PITreader is interrupted. ▸ Permission: Permission 1… 64 of the transponder key **Security ID:** Safety identifier of the transponder key

Base units
PNOZ m B1 Burner

Ethernet menu

The Ethernet configuration can be displayed and changed in the ***Ethernet*** menu.

Display	Example	Description
Information	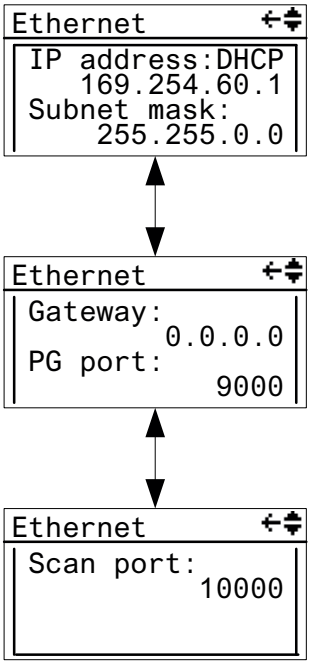	Display of the current Ethernet configuration
Change	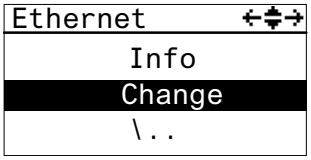	Change Ethernet configuration...
Edit IP Change IP address		▸ IP address ▸ Subnet mask ▸ Gateway Adjust -> Hold down multifunction switch for 2 s in order to access change mode
Edit ports Change IP address	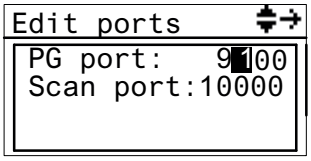	Adjust PG port and scan port -> Hold down multifunction switch for 2 s in order to access change mode
Use DHCP Change IP address	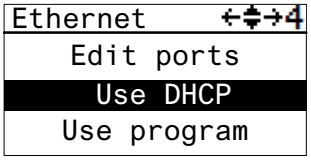	Obtain IP address automatically from the network (prerequisite: Network has a DHCP Server utility) -> Hold down multifunction switch for 2 s in order to perform the action

Base units
PNOZ m B1 Burner

Display	Example	Description
Use program Change IP address	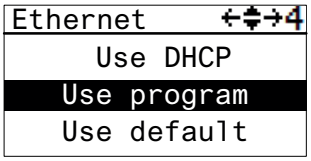	Load Ethernet settings from the active PNOZmulti project -> Hold down multifunction switch for 2 s in order to perform the action
Use default Change IP address	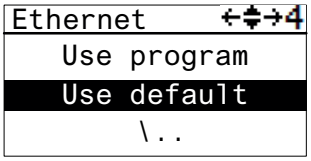	Load default settings IP address: 169.254.60.1 Subnet mask: 255.255.0.0 Gateway: 0.0.0.0 -> Hold down multifunction switch for 2 s in order to perform the action

Time menu

Display	Example	Description
Time Show date and time	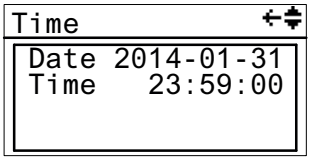	Show system's date and time
Set time Set date and time	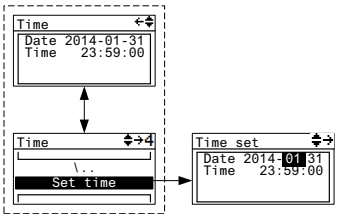	Change date and time -> Hold down multifunction switch for 2 s in order to access change mode

System mode menu

Display	Example	Description
Stop system **Restart system**	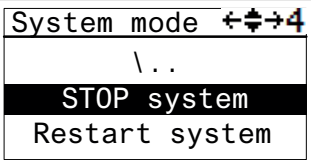	Stop system Restart system -> Hold down multifunction switch for 4 s in order to perform the actions

Base units
PNOZ m B1 Burner

Technical details

General	
Certifications	**CE, EAC (Eurasian), KOSHA, TÜV, cULus Listed**
Application range	**Failsafe**
Electrical data	
Supply voltage	
for	**Supply to the system**
Voltage	**24 V**
Kind	**DC**
Voltage tolerance	**-20 %/+25 %**
Output of external power supply (DC)	**18,5 W**
Output of external power supply (DC) at no load	**3 W**
Max. power dissipation of module	**4,5 W**
Status indicator	**Display, LED**
Test pulse outputs	
Number of test pulse outputs	**4**
Voltage	**24 V**
Current	**0,32 A**
Max. duration of off time during self test	**4 ms**
Short circuit-proof	**yes**
Potential isolation	**No**
Ethernet interface	
Number	**2**
IP address (automatically off)	**169.254.60.1**
Connection type	**RJ45**
Transmission rate	**10 MBit/s, 100 MBit/s**
Times	
Simultaneity in the two-hand circuit	**0,5 s**
Processing time	**30 ms**
Environmental data	
Ambient temperature	
In accordance with the standard	**EN 60068-2-14**
Temperature range	**0 - 60 °C**
Forced convection in control cabinet off	**55 °C**
Storage temperature	
In accordance with the standard	**EN 60068-2-1/-2**
Temperature range	**-25 - 70 °C**

Base units
PNOZ m B1 Burner

Environmental data	
Climatic suitability	
In accordance with the standard	**EN 60068-2-30, EN 60068-2-78**
Humidity	**93 % r. h. at 40 °C**
Condensation during operation	**Not permitted**
Max. operating height above sea level	**2000 m**
EMC	**EN 61131-2**
Vibration	
In accordance with the standard	**EN 60068-2-6**
Frequency	**5 - 150 Hz**
Acceleration	**1g**
Shock stress	
In accordance with the standard	**EN 60068-2-27**
Duration	**11 ms**
Airgap creepage	
In accordance with the standard	**EN 61131-2**
Overvoltage category	**II**
Pollution degree	**2**
Protection type	
In accordance with the standard	**EN 60529**
Housing	**IP20**
Terminals	**IP20**
Mounting area (e.g. control cabinet)	**IP54**
Mechanical data	
Mounting position	**horizontally on mounting rail**
DIN rail	
Top hat rail	**35 x 7,5 EN 50022**
Recess width	**27 mm**
Max. cable length	
Sum of individual cable lengths at the test pulse output	**2 km**
Material	
Bottom	**PC**
Front	**PC**
Top	**PC**
Connection type	**Cage clamp terminal, screw terminal**
Mounting type	**plug-in**
Conductor cross section with screw terminals	
1 core flexible	**0,25 - 2,5 mm², 24 - 12 AWG**
2 core with the same cross section, flexible without crimp connectors or with TWIN crimp connectors	**0,2 - 1,5 mm², 24 - 16 AWG**
Torque setting with screw terminals	**0,5 Nm**

Base units
PNOZ m B1 Burner

Mechanical data	
Conductor cross section with spring-loaded terminals: Flexible with/without crimp connector	**0,2 - 2,5 mm², 24 - 12 AWG**
Spring-loaded terminals: Terminal points per connection	**2**
Stripping length with spring-loaded terminals	**9 mm**
Dimensions	
Height	**101,4 mm**
Width	**45 mm**
Depth	**120,2 mm**
Weight	**209 g**

Where standards are undated, the 2018-07 latest editions shall apply.

Safety characteristic data

Operating mode	EN ISO 13849-1: 2015 PL	EN ISO 13849-1: 2015 Category	EN 62061 SIL CL	EN 62061 PFH_D [1/h]	IEC 61511 SIL	IEC 61511 PFD	EN ISO 13849-1: 2015 T_M [year]
2-channel	**PL e**	**Cat. 4**	**SIL CL 3**	**4,19E-10**	**SIL 3**	**3,65E-05**	**20**

Explanatory notes for the safety-related characteristic data:

- The SIL CL value in accordance with EN 62061 corresponds to the SIL value in accordance with EN 61508.
- T_M is the maximum mission time in accordance with EN ISO 13849-1. The value also applies as the retest interval in accordance with EN 61508-6 and IEC 61511 and as the proof test interval and mission time in accordance with EN 62061.

All the units used within a safety function must be considered when calculating the safety characteristic data.

Base units
PNOZ m B1 Burner

Order reference

Product

Product type	Features	Order no.
PNOZ m B1 Burner	Base unit	772102

Accessories

Connector

Product type	Features	Order no.
PNOZ mm0.xp terminator left	Terminator, black/yellow, x1	779261
RJ45 Connector	8-pin RJ45 male connector, straight, Cat 6a	380401

Connection terminals

Product type	Features	Order no.
Set4 Spring Terminals	1 set of spring-loaded terminals	751016
Set4 Screw Terminals	1 set of screw terminals	750016

Jumper

Product type	Features	Order no.
USB Memory 512MB	Pilz USB memory, 512 MB	779213

Input module
PNOZ m EF 16DI



Overview

Unit features

Application of the product PNOZ m EF 16DI:

Expansion module for connection to a base unit from the system.

The product has the following features:

- Can be configured in the PNOZmulti Configurator
- 16 inputs for connecting, for example:
  - E-STOP pushbutton
  - Two-hand button
  - Safety gate limit switch
  - Start button
  - Light beam devices
  - Scanner
  - Enabling switch
  - PSEN
  - Operating mode selector switch
- LED for:
  - Error messages
  - Diagnostics
- Test pulse outputs used to monitor shorts across the inputs
- Plug-in connection terminals:
  Either spring-loaded terminal or screw terminal available as an accessory (see order reference)
- Please refer to the document "PNOZmulti System Expansion" for the PNOZmulti base units that can be connected.

Input module
PNOZ m EF 16DI

Front view

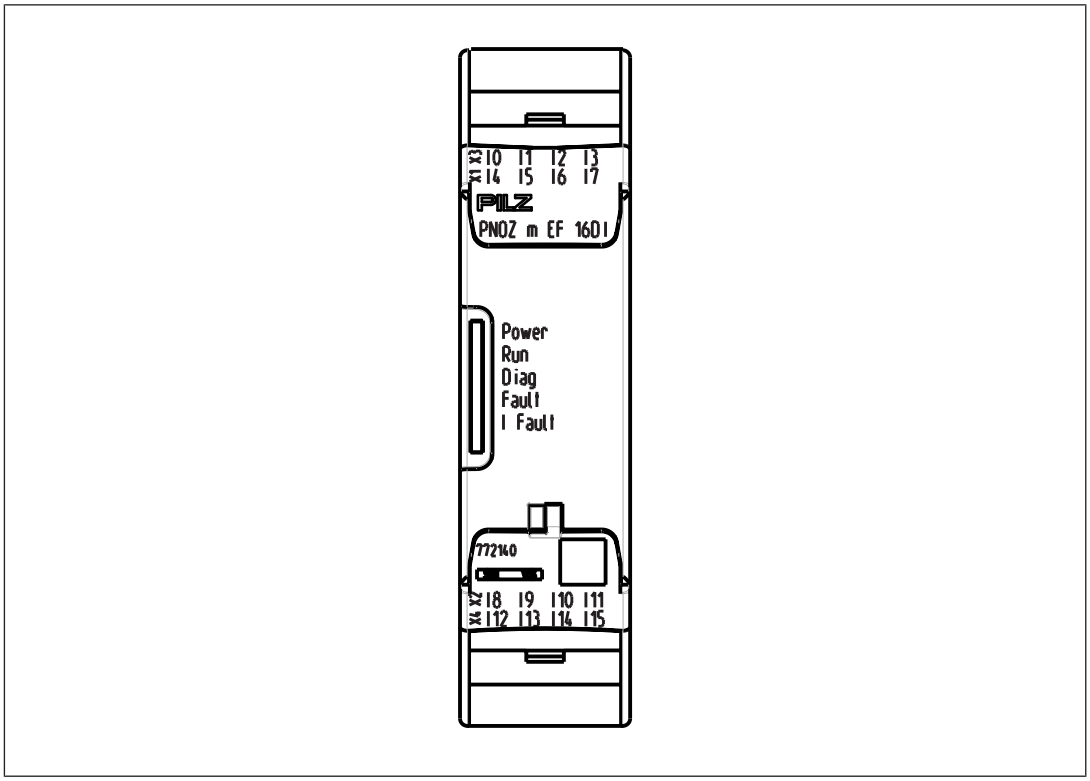

Legend:

- Inputs I0 – I15
- LEDs:
  - POWER
  - Run
  - Diag
  - Fault
  - I Fault

To determine the version of the device, please note:

The firmware version number is on the labelling clip. This is also the version number that must be selected in the PNOZmulti Configurator under ***Version*** during the hardware configuration.

Input module
PNOZ m EF 16DI

Function description

Functions

The expansion module provides additional inputs.

The function of the inputs on the safety system depends on the safety circuit created using the PNOZmulti Configurator. A removable data medium is used to download the safety circuit to the base unit. The base unit has 2 microcontrollers that monitor each other. They evaluate the input circuits on the base unit and expansion modules and switch the outputs on the base unit and expansion modules accordingly.

The online help on the PNOZmulti Configurator contains descriptions of the operating modes and all the functions of the PNOZmulti safety system, plus connection examples.

System reaction time

Calculation of the maximum reaction time between an input switching off and a linked output in the system switching off is described in the document "PNOZmulti System Expansion [30]".

Block diagram

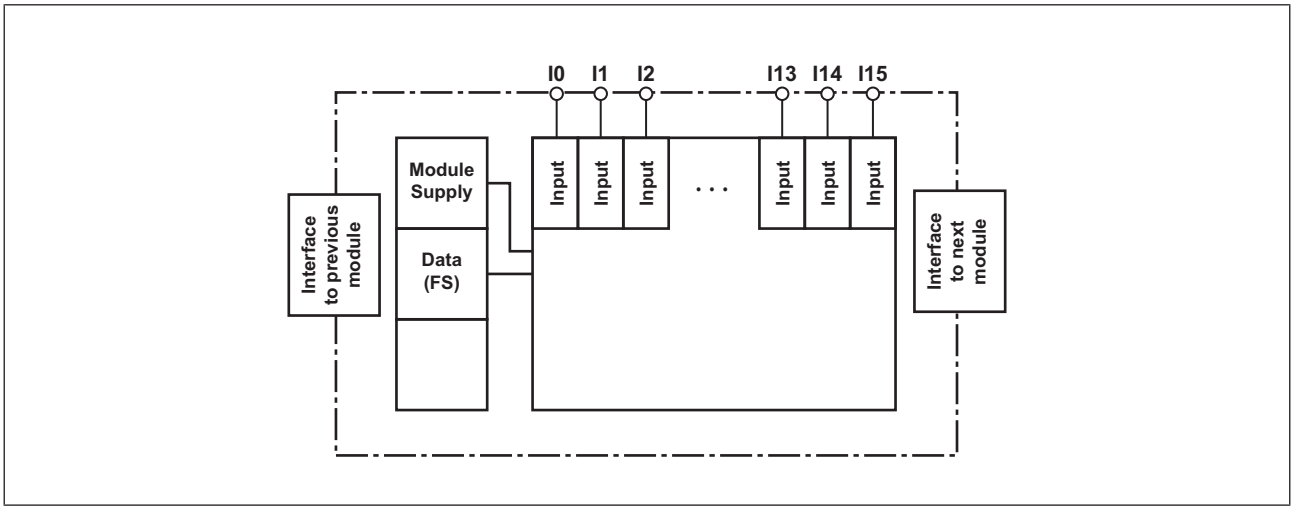

Input module
PNOZ m EF 16DI

Installation

Dimensions in mm

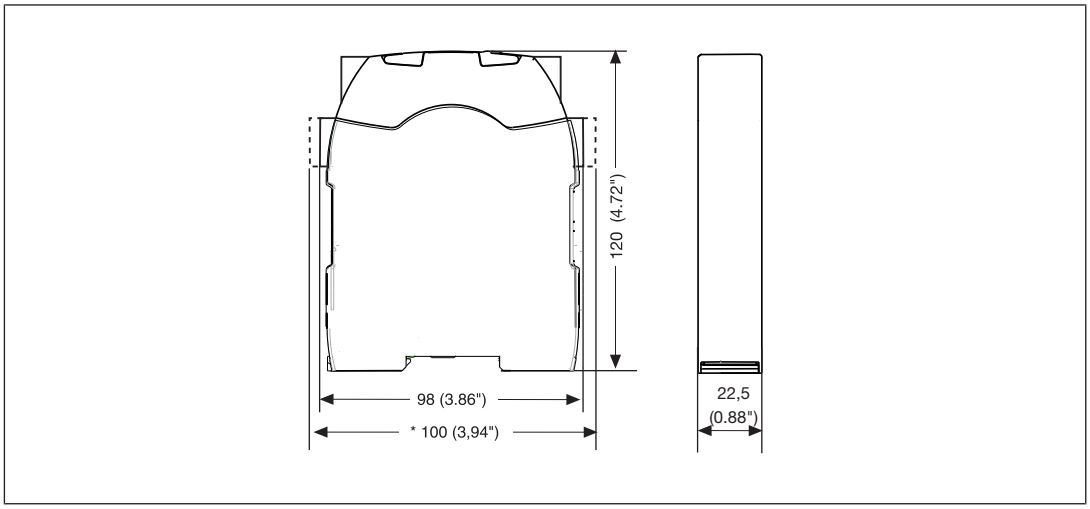

Commissioning

General wiring guidelines

The wiring is defined in the circuit diagram of the PNOZmulti Configurator.

Please note:

- Information given in the Technical details [📖 748] must be followed.
- The position of the expansion module is specified in the Hardware configuration of the PNOZmulti Configurator.
- Use copper wiring with a temperature stability of 75 °C.

Connection

Input circuit	Single-channel	Dual-channel
Example: E-Stop without detection of shorts across contacts	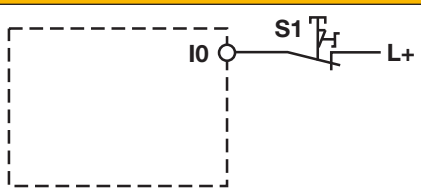	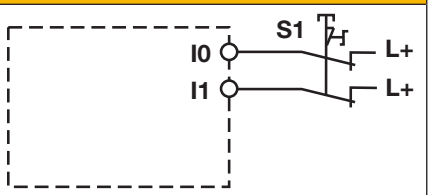
Example: E-Stop with detection of shorts across contacts	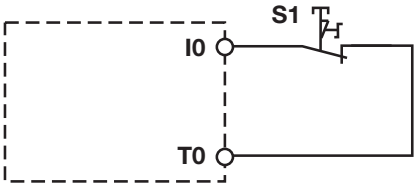	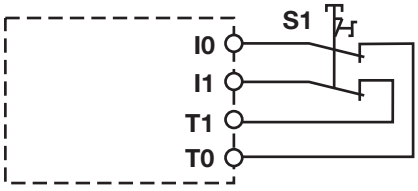

Input module
PNOZ m EF 16DI

Technical details

General	
Certifications	**CE, EAC (Eurasian), KOSHA, TÜV, cULus Listed**
Application range	**Failsafe**
Module's device code	**00E2h**
Electrical data	
Supply voltage	
for	**Module supply**
internal	**Via base unit**
Voltage	**24 V**
Kind	**DC**
Current consumption	**46 mA**
Power consumption	**1,1 W**
Max. power dissipation of module	**3 W**
Status indicator	**LED**
Inputs	
Number	**16**
Input voltage in accordance with EN 61131-2 Type 1	**24 V DC**
Input current at rated voltage	**5 mA**
Input current range	**2,5 - 5,3 mA**
Pulse suppression	**0,5 ms**
Maximum input delay	**8 ms**
Potential isolation	**No**
Environmental data	
Ambient temperature	
In accordance with the standard	**EN 60068-2-14**
Temperature range	**0 - 60 °C**
Forced convection in control cabinet off	**55 °C**
Storage temperature	
In accordance with the standard	**EN 60068-2-1/-2**
Temperature range	**-25 - 70 °C**
Climatic suitability	
In accordance with the standard	**EN 60068-2-30, EN 60068-2-78**
Condensation during operation	**Not permitted**
Max. operating height above sea level	**2000 m**
EMC	**EN 61131-2**
Vibration	
In accordance with the standard	**EN 60068-2-6**
Frequency	**5 - 150 Hz**
Acceleration	**1g**

Input module
PNOZ m EF 16DI

Environmental data	
Shock stress	
In accordance with the standard	**EN 60068-2-27**
Acceleration	**15g**
Duration	**11 ms**
Airgap creepage	
In accordance with the standard	**EN 61131-2**
Overvoltage category	**II**
Pollution degree	**2**
Rated insulation voltage	**30 V**
Protection type	
In accordance with the standard	**EN 60529**
Housing	**IP20**
Terminals	**IP20**
Mounting area (e.g. control cabinet)	**IP54**
Mechanical data	
Mounting position	**horizontally on mounting rail**
DIN rail	
Top hat rail	**35 x 7,5 EN 50022**
Recess width	**27 mm**
Max. cable length	
Max. cable length per input	**1 km**
Material	
Bottom	**PC**
Front	**PC**
Top	**PC**
Connection type	**Spring-loaded terminal, screw terminal**
Mounting type	**plug-in**
Conductor cross section with screw terminals	
1 core flexible	**0,25 - 2,5 mm², 24 - 12 AWG**
2 core with the same cross section, flexible without crimp connectors or with TWIN crimp connectors	**0,2 - 1,5 mm², 24 - 16 AWG**
Torque setting with screw terminals	**0,5 Nm**
Conductor cross section with spring-loaded terminals: Flexible with/without crimp connector	**0,2 - 2,5 mm², 24 - 12 AWG**
Spring-loaded terminals: Terminal points per connection	**2**
Stripping length with spring-loaded terminals	**9 mm**
Dimensions	
Height	**101,4 mm**
Width	**22,5 mm**
Depth	**120 mm**

Input module
PNOZ m EF 16DI

Mechanical data	
Weight	**95 g**

Where standards are undated, the 2012-08 latest editions shall apply.

Safety characteristic data

Unit	Operating mode	EN ISO 13849-1: 2015 PL	EN ISO 13849-1: 2015 Category	EN 62061 SIL CL	EN 62061 PFH_D [1/h]	EN ISO 13849-1: 2015 T_M [year]
Logic						
CPU	**2-channel**	**PL e**	**Cat. 4**	**SIL CL 3**	**2,84E-10**	**20**
Input						
SC inputs	**1-channel**	**PL d**	**Cat. 2**	**SIL CL 2**	**2,10E-09**	**20**
SC inputs	**2-channel**	**PL e**	**Cat. 4**	**SIL CL 3**	**4,27E-11**	**20**
SC inputs	**Short circuit-forming safety mats**	**PL d**	**Cat. 3**	**SIL CL 2**	**1,80E-10**	**20**
SC inputs	**1-ch., pulsed light barrier**	**PL e**	**Cat. 4**	**SIL CL 3**	**2,10E-10**	**20**

Explanatory notes for the safety-related characteristic data:

- The SIL CL value in accordance with EN 62061 corresponds to the SIL value in accordance with EN 61508.
- T_M is the maximum mission time in accordance with EN ISO 13849-1. The value also applies as the retest interval in accordance with EN 61508-6 and IEC 61511 and as the proof test interval and mission time in accordance with EN 62061.

All the units used within a safety function must be considered when calculating the safety characteristic data.

Input module
PNOZ m EF 16DI

Classification according to ZVEI, CB24I

The following tables describe the classes and specific values of the product interface and the classes of interfaces compatible with it. The classification is described in the ZVEI position paper "Classification of Binary 24 V Interfaces - Functional Safety aspects covered by dynamic testing".

Input	
Interfaces	
Drain	
Interface	**Module**
Class	**C2**
Source	
Interface	**Sensor**
Class	**C2, C3**
Drain parameters	
Max. test pulse duration	**500 µs**
Min. input resistance	**5,6 kOhm**
Max. capacitive load	**126 nF**

Order reference

Product

Product type	Features	Order No.
PNOZ m EF 16DI	Expansion module	772 140

Accessories

Connection terminals

Product type	Features	Order No.
Set spring terminals	1 set of spring-loaded terminals	751 004
Set screw terminals	1 set of screw terminals	750 004

Terminator, jumper

Product type	Features	Order no.
PNOZ mm0.xp connector left	Jumper yellow/black to connect the modules, 10 pieces	779 260

Analogue input module
PNOZ m EF 4AI



Overview

Unit features

Application of the product PNOZ m EF 4AI:

Analogue input module for connection to a base unit from the PNOZmulti 2 system

The product has the following features:

- 4 analogue inputs for current measurement

Analogue input module
PNOZ m EF 4AI

- Each input can be configured separately
- Current range: 0 ... 25 mA
- Resolution current measurement: 15 Bit + sign Bit
- Working range monitoring [755] in accordance with NAMUR NE43 recommendation
- Scaling function [759]
- Plausibility check [756]
- Mathematical operations [760]
- Constant [760]
- Threshold value monitoring [760]
- Range monitoring [761]
- Exact analogue value can be passed to a fieldbus or OPC server for diagnostic purposes
- LEDs for
  - Operating status
  - Status of the input signals
  - Error/diagnostics
- Plug-in connection terminals:
  Either spring-loaded terminal or screw terminal available as an accessory (see Order references for accessories [772]).
- Please refer to the document "PNOZmulti System Expansion" for details of the base units PNOZmulti 2 that can be connected.

Analogue input module
PNOZ m EF 4AI

Front view

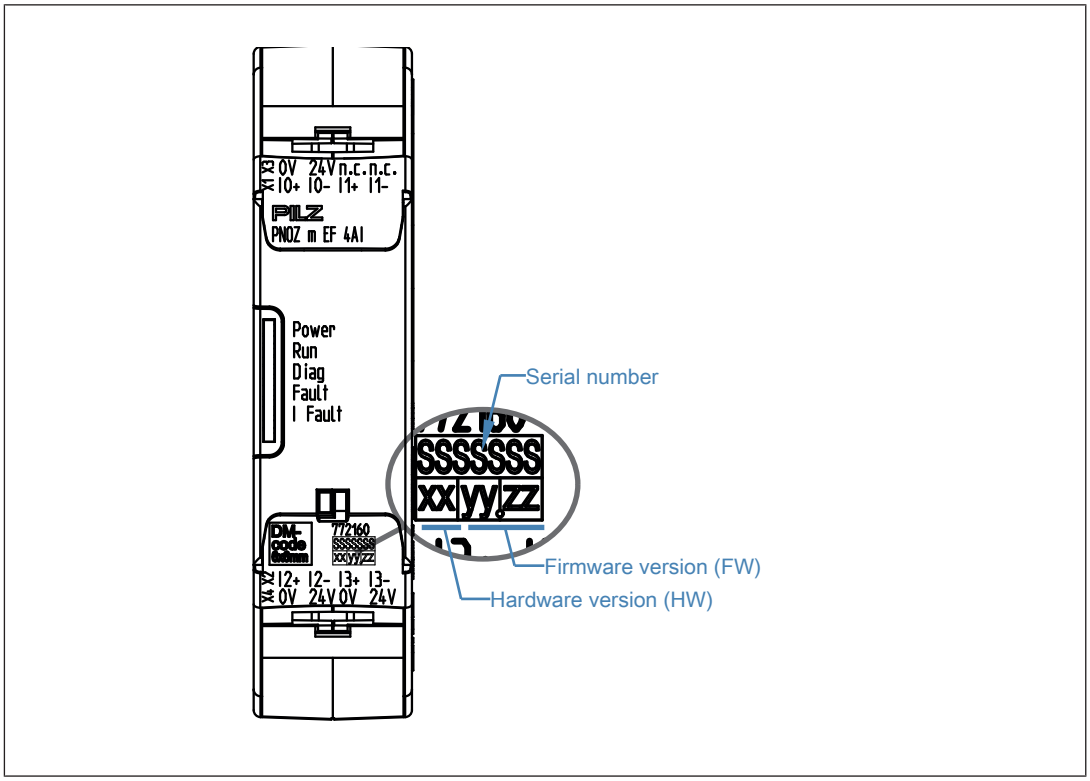

Legend

X1:	Analogue inputs I0+, I0-, I1+, I1 -
X2:	Analogue inputs I2+, I2-, I3+, I3-
X3:	Supply connections 0 V, 24 V to supply the sensors
X4	Supply connections 0 V, 24 V, 0 V, 24 V to supply the analogue input module and to supply the sensors
LEDs	Power, Run, Diag, Fault, I Fault,

Function Description

Analogue inputs

The module has 4 analogue inputs. This is to monitor analogue input current signals.
The input signals are recorded and read in at each input through two channels and are converted into digital signals.
The measured value resolution is 15 Bit plus sign Bit.
The measuring range is 0 … 25 mA

Analogue input module
PNOZ m EF 4AI

Monitoring functions

In the PNOZmulti Configurator you can configure the following limit values and monitoring functions.

Working range monitoring

With the working range monitoring you define the valid working or measuring range. The working range monitoring is used to detect sensor errors or errors in the wiring.
You can define 4 limit values (R1 … R4) that define the working range and the failure information area.
If you do not configure a working range, the working range will be 0 … 25 mA.

The default settings are in accordance with NAMUR NE 43 recommendation to simplify the signal level for the failure information. We recommend compliance with NAMUR recommendation NE 43.

- **Lower failure information range (0 mA… R1)**
  Default: 0 … 3.6 mA
  (e.g. circuit interrupted)
- **Working range (R2 … R3)**
  Default: 3.8 … 20.5 mA
  (valid measuring range, upper and lower range limit)
- **Upper failure information range (R4 … 25 mA)**
  Default: 21 … 25 mA
  (e.g. short circuit or transducer error)
- **Hysteresis (R1 … R2, R3 … R4)**
  - **Upper hysteresis R3 ... R4:**
    The numerical value is invalid, when R4 is exceeded.
    The numerical value is valid again when R3 is undershot.
  - **Lower hysteresis R1 … R2:**
    The numerical value is invalid, when R1 is undershot.
    The numerical value is valid again when R2 is exceeded.

Analogue input module
PNOZ m EF 4AI

Example: Numerical value undershoots the working range

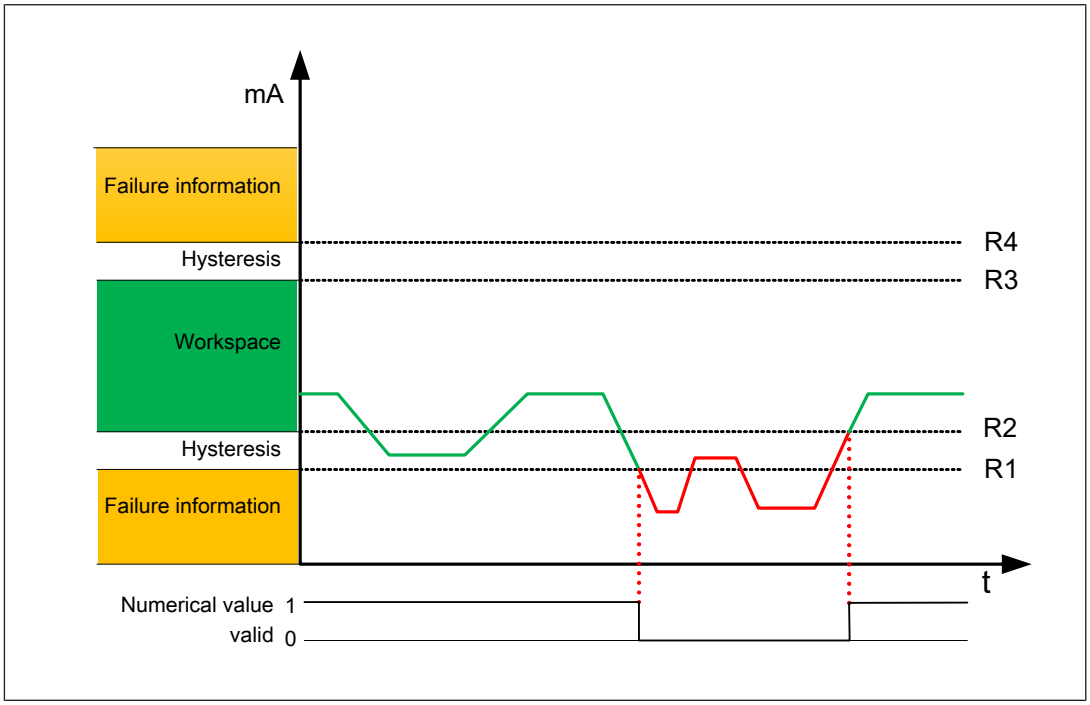

Example: Numerical value exceeds the working range

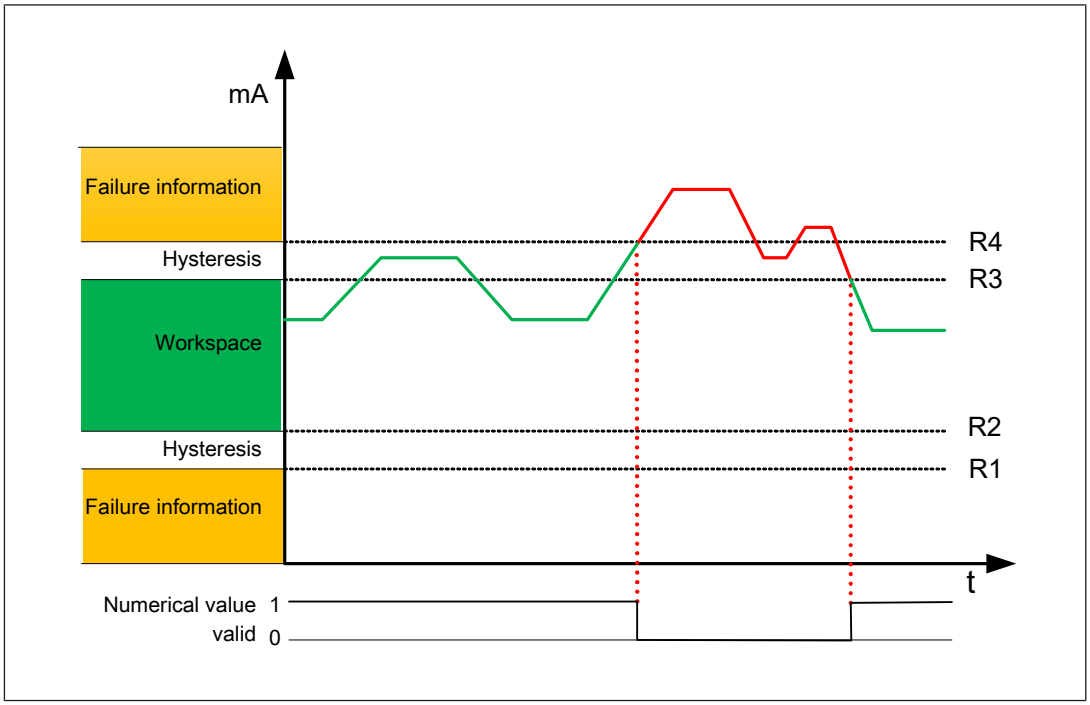

Plausibility check

In the plausibility check, a leading signal (L) is checked with a reference signal (P).

Analogue input module
PNOZ m EF 4AI

When the deviation of both values is greater than the configured tolerance, the numerical value will be signalised as invalid.

The reference signal is used to calculate the tolerance.

The following tolerances can be configured:

Difference tolerance

The tolerance value defines the maximum permitted deviation between the two numerical values. There are three different types of tolerance determination:

Absolute tolerance

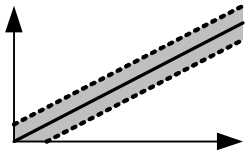

Absolute value by which the signals can deviate from each other as a maximum.

Percentage tolerance

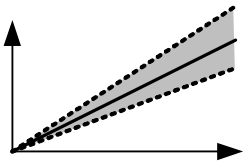

Max. percentage by which the signals may differ.

Absolute/percentage tolerance

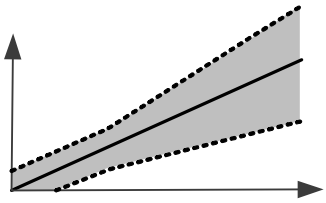

Combined tolerance. Both an absolute value and a percentage value are configured. The higher tolerance value is valid, respectively.

Analogue input module
PNOZ m EF 4AI

Peak tolerance

Peak values can be tolerated, that exceed the permitted deviation configured above for a short period.

- Tolerance time (t1)
  Maximum time for which the tolerance value may be exceeded
- Tolerance period (t2)
  Minimum time that may elapse from one limit value overshoot to the next

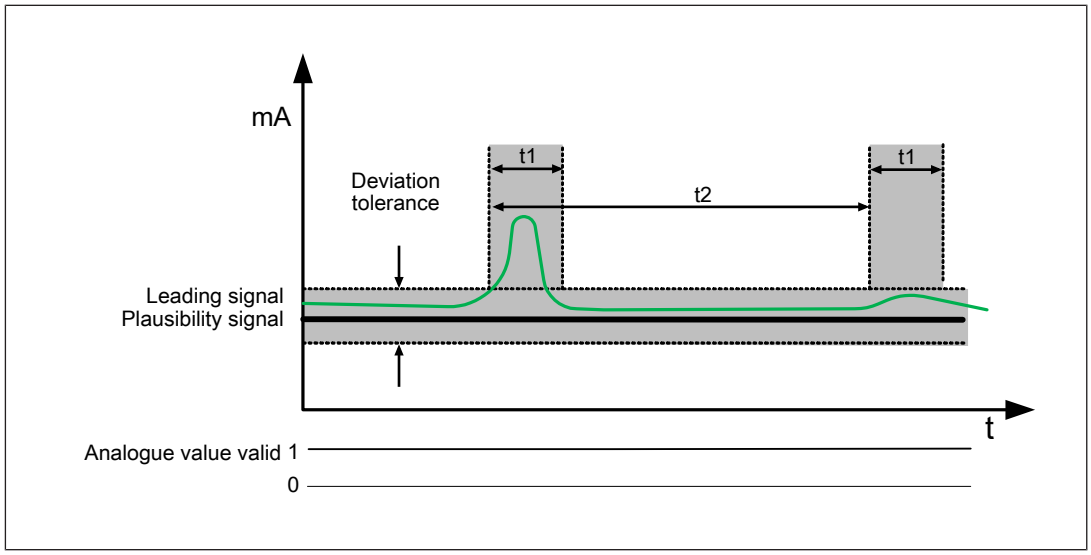

Fig.: Leading signal remains within the tolerance limits

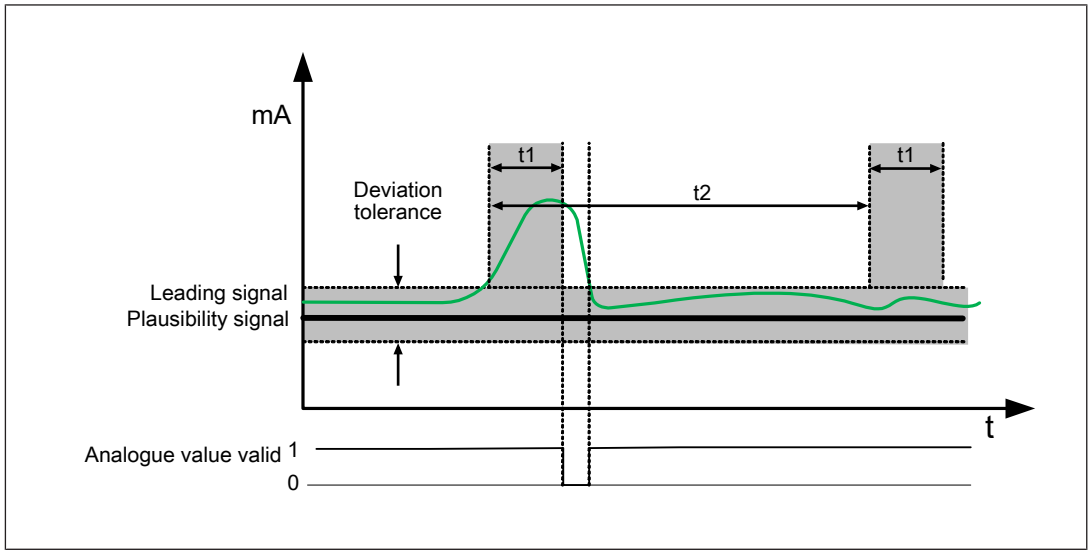

Fig.: Leading signal exceeds the tolerance time (t1)

Analogue input module
PNOZ m EF 4AI

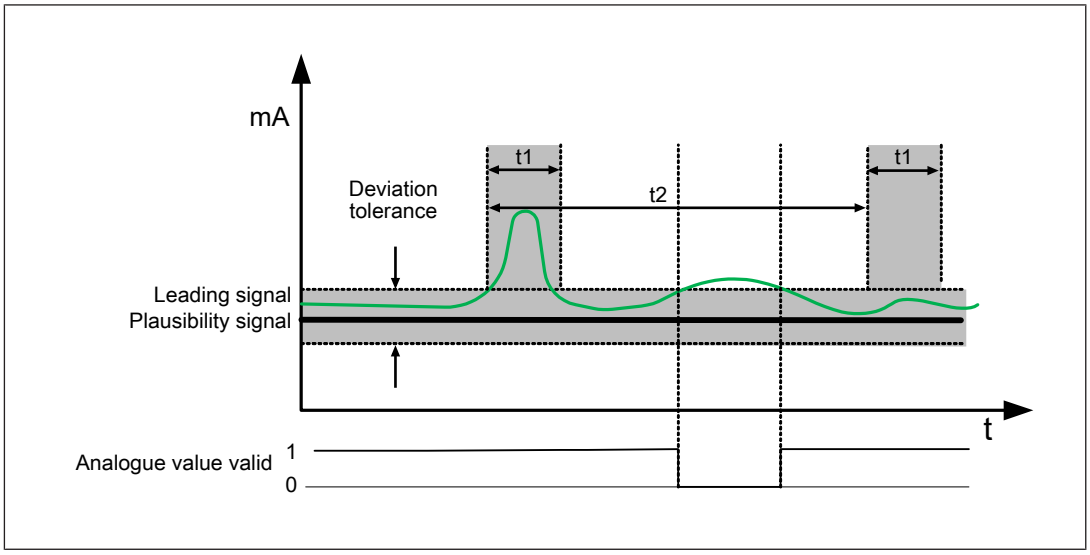

Fig.: Leading signal does not maintain the duration of the tolerance period (t2)

Scaling

The scaling function can be used to convert the analogue measured value (mA) to another numerical value (physical measured value of the transducer, e.g. in litres). The scaling can only be used with linear input variables

To do this, you define an upper and lower value each for the input value (current value) and for the scaled value, and you specify the unit of the scaled value.

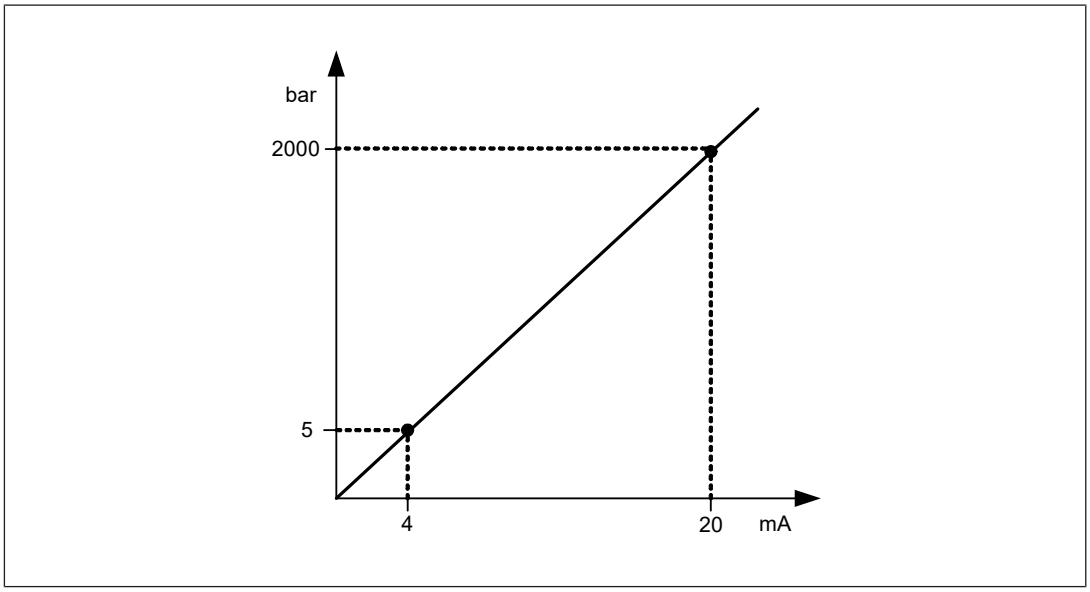

Analogue input module
PNOZ m EF 4AI

Mathematical operations

You can perform a mathematical operation with two numerical values:

- Addition
  The sum of two numerical values is calculated (X + Y).
- Subtraction
  The difference of two numerical values is calculated (X – Y).
- Average
  The average value of two numerical values is calculated ((X + Y) / 2).
- Multiplication
  The product of two numerical values is calculated (X * Y).
- Division
  The quotient of two numerical values is (X / Y).

The result of the mathematical operation can be issued as an amount (without sign).

Constant

A constant numerical value can be defined. The value is without dimensions and it can also be negative. It can be linked in the user program and used e.g. as an offset.

Threshold value monitoring

You can define switching thresholds, which can be used to monitor certain process variables (e.g. temperature values).

You can monitor whether a numerical value is greater or less than a configured switching threshold.

Hysteresis:
2 threshold values are configured per switching threshold. One threshold value (switch-on threshold) defines when the affected output is switched on. The second threshold value (switch-off threshold) defines when the output will be switched off again.

Monitoring to "greater than"

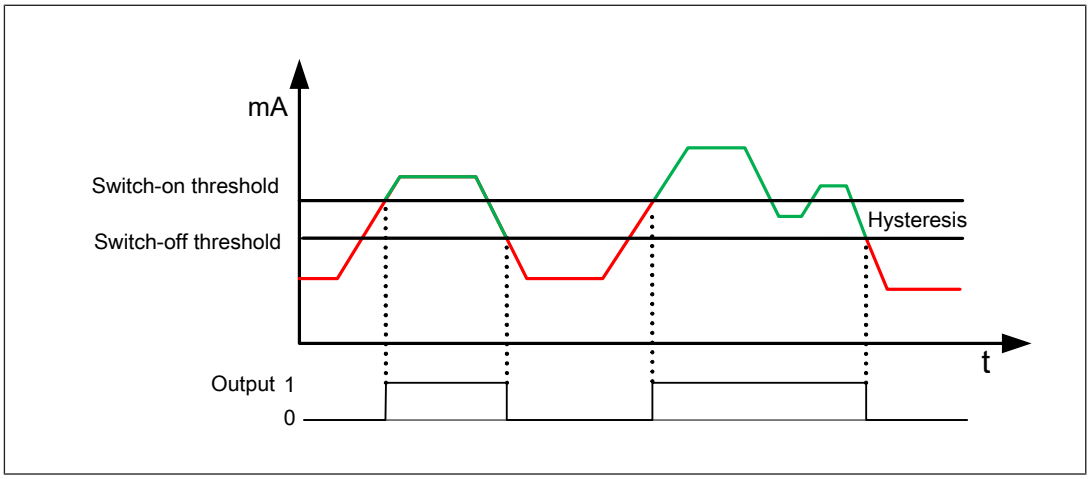

Analogue input module
PNOZ m EF 4AI

Monitoring to "less than"

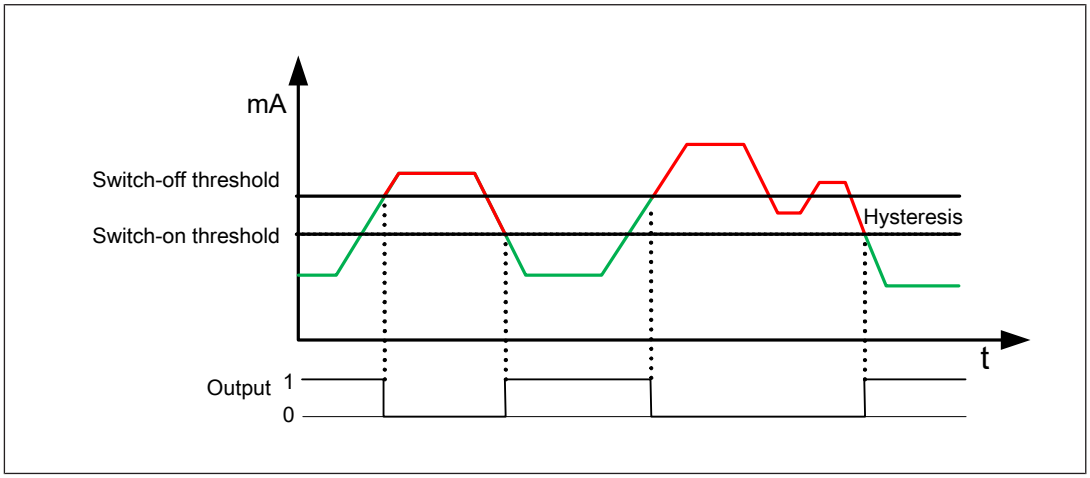

Range monitoring

In contrast to the threshold value monitoring, an upper and a lower switching threshold are defined in the range monitoring.

This is to monitor both exceeding or dropping below a limit value.

Hysteresis:
2 threshold values are configured per switching threshold. One threshold value (switch-on threshold) defines when the affected output is switched on. The second threshold value (switch-off threshold) defines when the output will be switched off again.

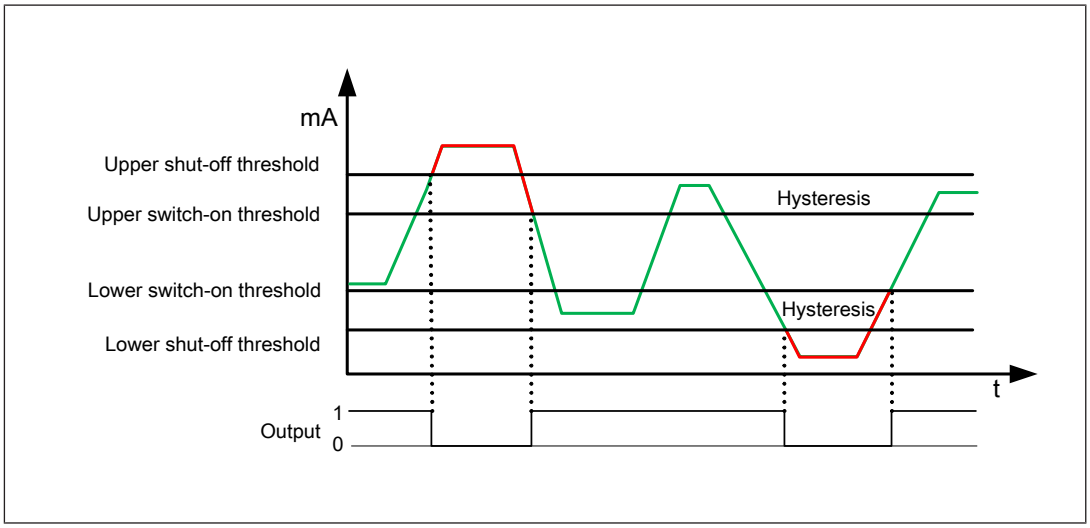

Diagnostics

Up to six numerical values can be passed to a fieldbus or OPC server for diagnostic purposes (see also document ***Communication Interfaces PNOZmulti 2, chapter Process data/Advanced data***).

Analogue input module
PNOZ m EF 4AI

The numerical values are also output on the base unit display.

Each value to be passed on is assigned to a fieldbus address.

When no element ***Diagnostics*** is configured, the fieldbus address is assigned automatically to the 4 analogue inputs i0 … i3:

i0 → Data ID 1

i1 → Data ID 2

i2 → Data ID 3

i3 → Data ID 4

The Diagnostics elements can be used to assign up to 6 numerical values user-defined to the fieldbus addresses (data ID 1 … 6). The automatically assigned fieldbus addresses are overwritten.
The fieldbus address is configured in the element ***Diagnostics***. Then the ***Diagnostics*** element is connected to the required numerical output of an element.

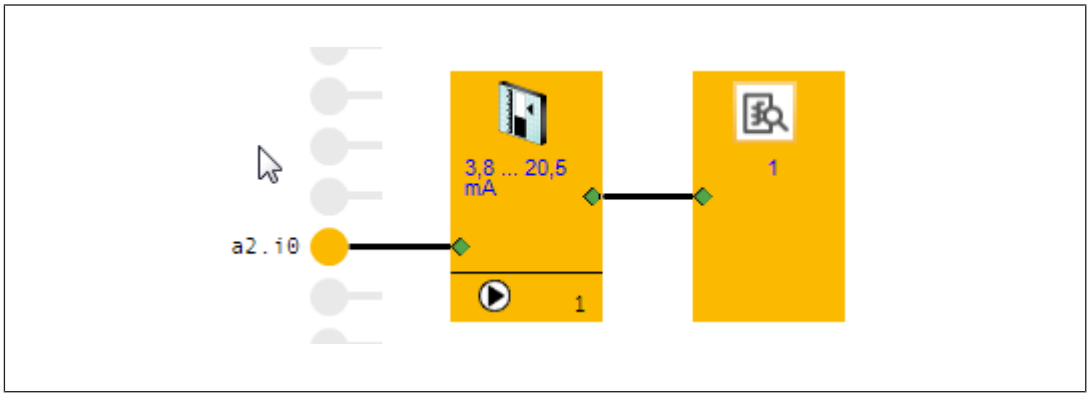

Fig.: Input i0 is assigned to the Data ID 1

Block diagram

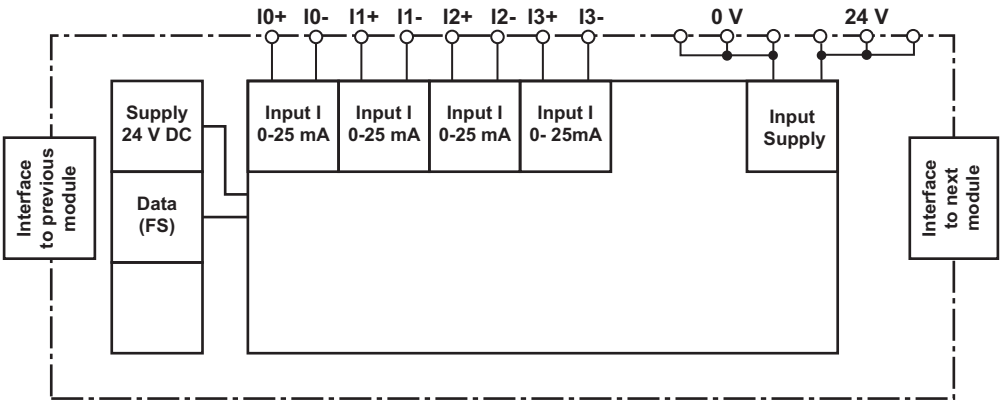

Analogue input module
PNOZ m EF 4AI

Installation

Dimensions in mm

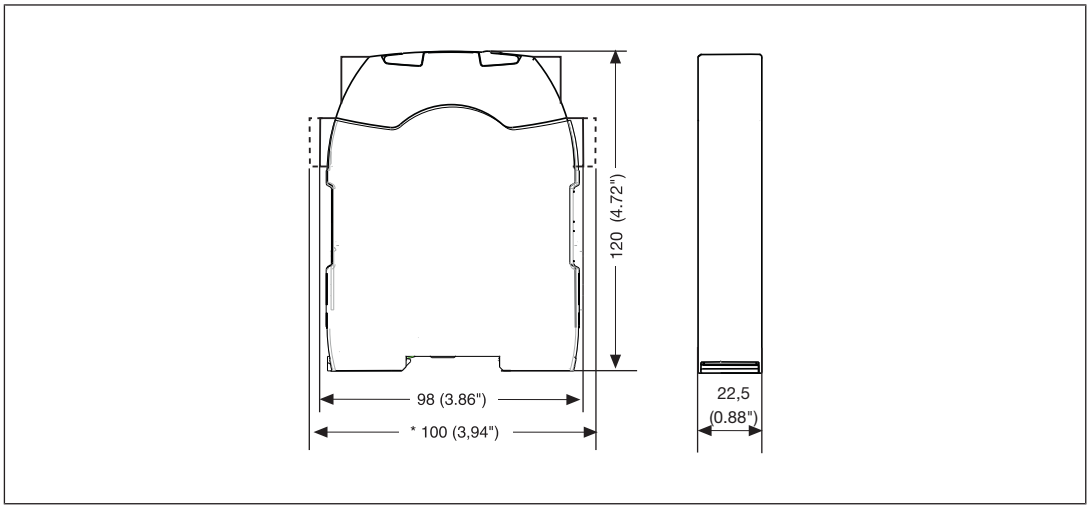

Commissioning

Wiring

The wiring is defined in the circuit diagram of the PNOZmulti Configurator.

Please note:

- Information given in the Technical details [📖 769] must be followed.
- The position of the expansion module is specified in the Hardware configuration of the PNOZmulti Configurator.
- Use copper wiring with a temperature stability of 75 °C.
- The power supply that feeds the expansion module and the sensors must meet the regulations for extra low voltages with protective electrical separation (SELV, PELV).
- Supply connections
  The 6 supply connections 24 V and 0 V to the terminal blocks X3 and X4 are interconnected internally.
  - The supply of the analogue input module PNOZ m EF 4AI has to be made via the supply connections 24 V and 0 V at the terminal block X4.
  - The other supply connections can be used for the supply of the sensors.
- Protect the supply voltage as follows:
  - Circuit breaker, characteristic C – 2 … 6 A

    or
  - Blow-out fuse, slow, 2 … 6 A
- Use shielded, twisted pair cable for the connections on the input current circuits.

Analogue input module
PNOZ m EF 4AI

- Separate the supply voltage cable from the analogue input current lines.
- **For transducers located outside the control cabinet:** Where the cable enters the control cabinet, the cable shield **must** be connected to the earth potential over a wide surface area and with low impedance (connect in star).

Connection

Supply voltage

Supply voltage	DC
	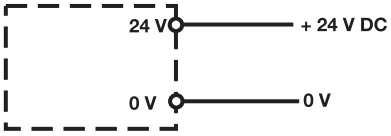

Analogue input module
PNOZ m EF 4AI

2-wire connection, supply voltage of sensors via analogue input module

- Supply connections 24 V and 0 V are used to supply the analogue input module and to supply the sensors.
- The terminals I0- … I3- and 0 V must be bridged.

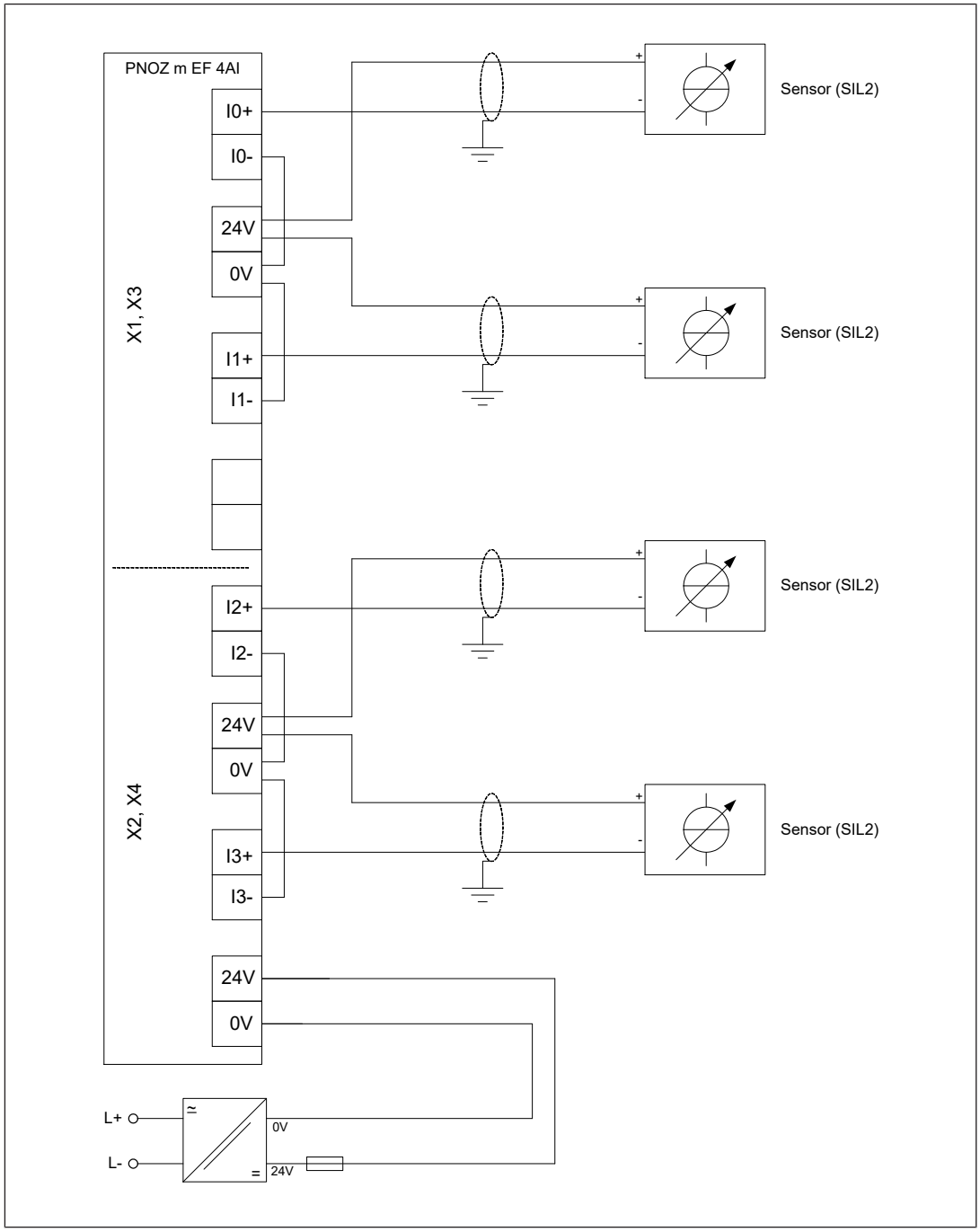

Analogue input module
PNOZ m EF 4AI

2-wire connection, supply voltage of sensors externally

- The supply connections 24 V and 0 V are used only to supply the analogue input module.
- The terminals I0- … I3- and 0 V must be bridged.
- The 0 V connections of the external power supplies have to be interconnected.

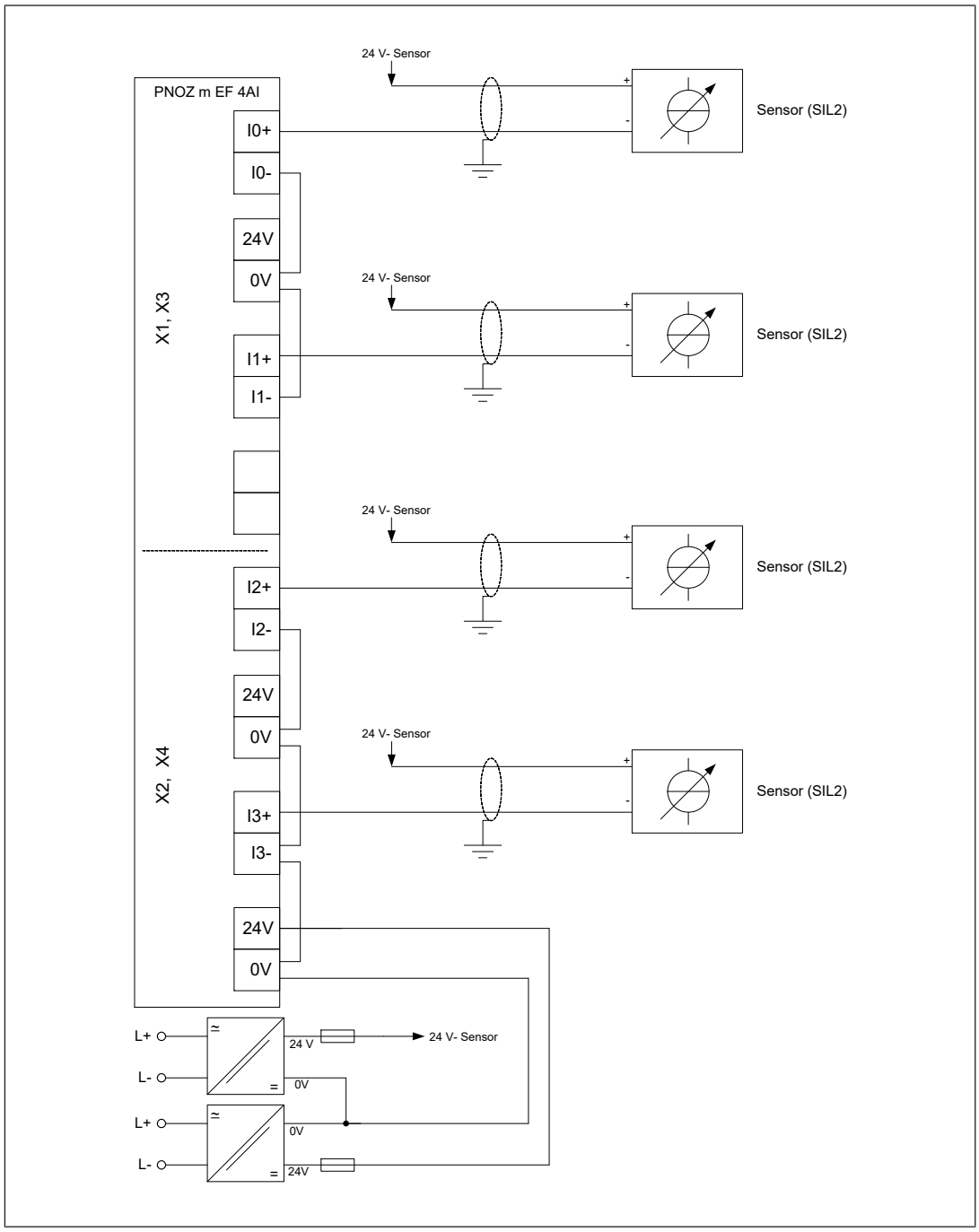

Analogue input module
PNOZ m EF 4AI

4-wire connection, supply voltage of sensors via analogue input module

- Supply connections 24 V and 0 V are used to supply the analogue input module and to supply the sensors.

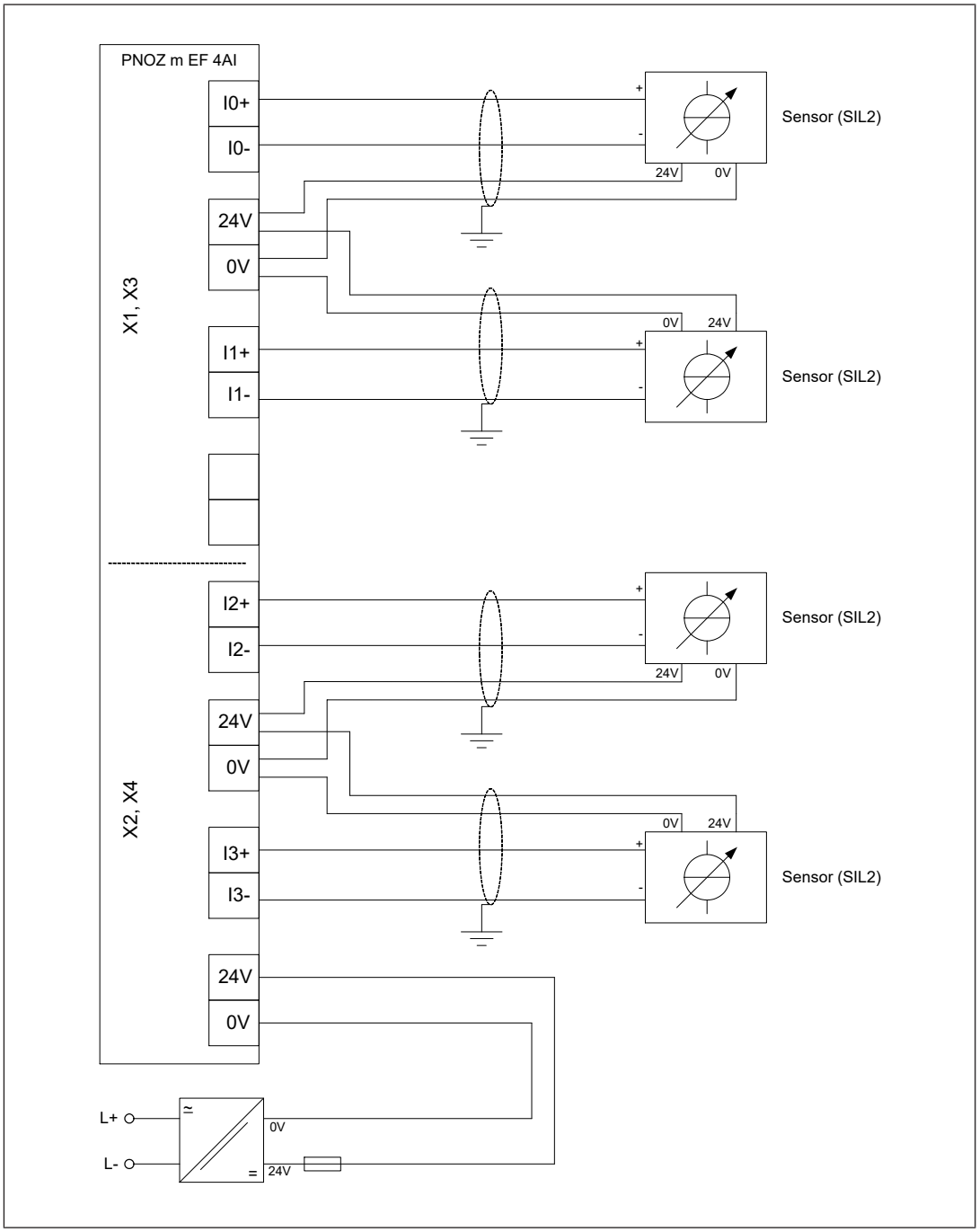

Analogue input module
PNOZ m EF 4AI

4-wire connection, supply voltage of sensors externally

- The supply connections 24 V and 0 V are used only to supply the analogue input module.
- The 0 V- connections of the external power supplies can be interconnected.

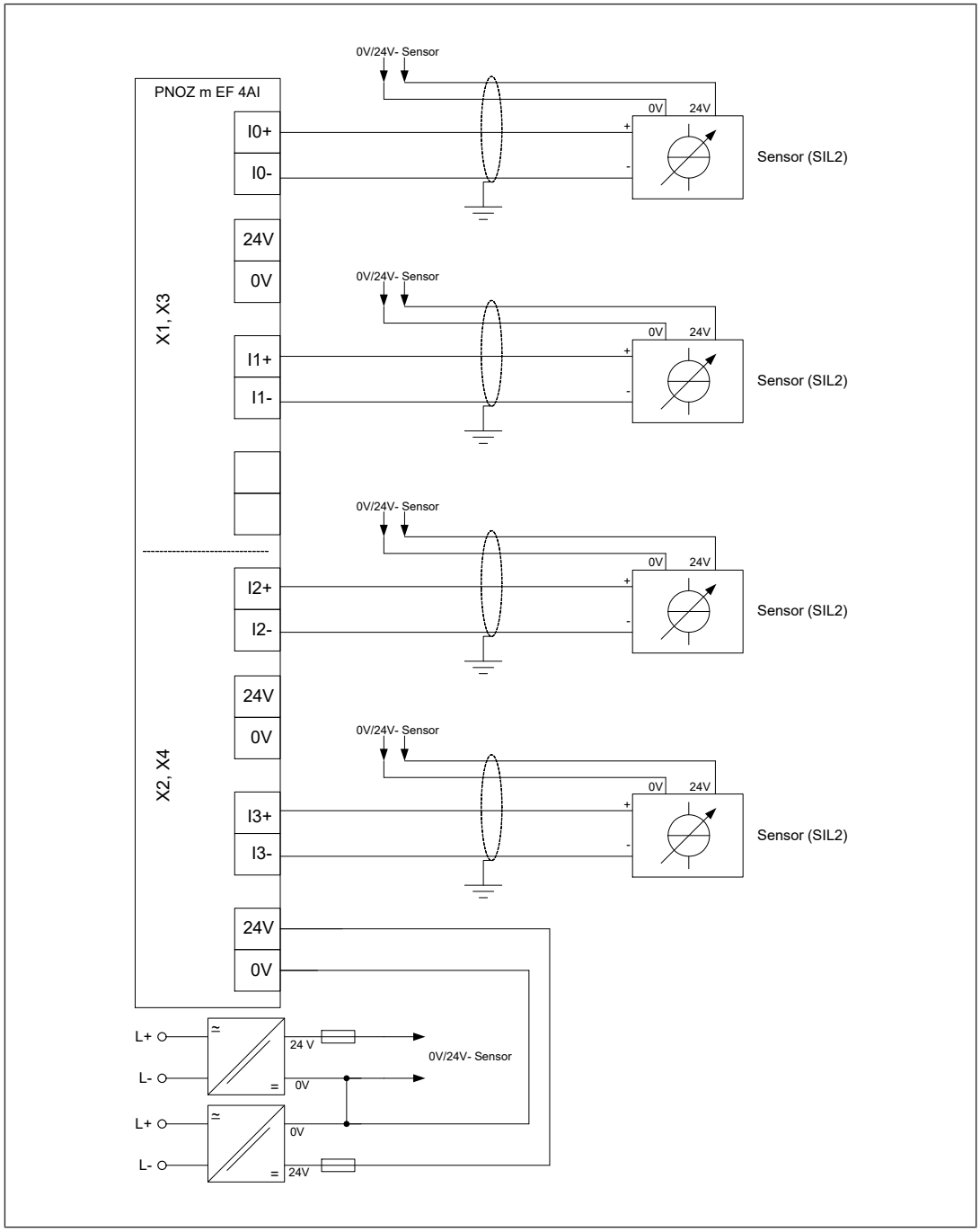

Analogue input module
PNOZ m EF 4AI

Technical details

General	
Certifications	**CE, EAC (Eurasian), KOSHA, TÜV, cULus Listed**
Application range	**Failsafe**
Module's device code	**00E6h**
Electrical data	
Supply voltage	
for	**Supply to sensor evaluation**
Voltage	**24 V**
Kind	**DC**
Voltage tolerance	**-20 %/+25 %**
Max. permitted current	**0,25 A**
Max. continuous current that the external power supply must provide	**40 mA**
Output of external power supply (DC) at no load	**1 W**
Potential isolation	**yes**
Supply voltage	
for	**Module supply**
internal	**Via base unit**
Voltage	**24 V**
Kind	**DC**
Current consumption	**30 mA**
Power consumption	**0,7 W**
Max. power dissipation of module	**2 W**
Status indicator	**LED**
Analogue inputs	
Number of analogue inputs	**4**
Type of analogue inputs	**Current**
Measuring ranges	
Type	**Differential input**
Measuring range	**4 .. 20 mA**
Type	**Differential input**
Measuring range	**0 .. 25 mA**
Input filter	**RC filter, 1st order**
Cutoff frequency	**700 Hz**

Analogue input module
PNOZ m EF 4AI

Analogue inputs	
Current measurement	
Signal range	**0,00 - 25,00 mA**
Resolution	**16 Bit (15 Bit + sign)**
Value of least significant bit (LSB)	**0,78 µA**
Input resistance	**156 Ohm + approx. 1.6 V threshold voltage**
Max. continuous current	**30 mA**
Scan rate	**10 kHz**
Safety-related accuracy (1 input)	**1 %**
Deviations from the measuring range limit value	
Linearity error	**0,05 %**
Output variable error at 25 °C	**0,3 %**
Temperature coefficient	**0,003 %/K**
Greatest transient deviation during el. interference test	**0,6 %**
Max. measurement error at full temperature range	**0,5 %**
Repetition accuracy at 25 °C	**0,05 %**
Monotony without error codes	**yes**
Data format supplied to application program	**Float**
Conversion method	**Successive approximation**
Potential isolation	**yes**
Environmental data	
Ambient temperature	
In accordance with the standard	**EN 60068-2-14**
Temperature range	**0 - 60 °C**
Forced convection in control cabinet off	**55 °C**
Storage temperature	
In accordance with the standard	**EN 60068-2-1/-2**
Temperature range	**-25 - 70 °C**
Climatic suitability	
In accordance with the standard	**EN 60068-2-30, EN 60068-2-78**
Condensation during operation	**Not permitted**
Max. operating height above sea level	**2000 m**
EMC	**EN 61131-2**
Vibration	
In accordance with the standard	**EN 60068-2-6**
Frequency	**5 - 150 Hz**
Acceleration	**1g**
Shock stress	
In accordance with the standard	**EN 60068-2-27**
Acceleration	**15g**
Duration	**11 ms**

Analogue input module
PNOZ m EF 4AI

Environmental data	
Airgap creepage	
In accordance with the standard	**EN 61131-2**
Overvoltage category	**II**
Pollution degree	**2**
Protection type	
In accordance with the standard	**EN 60529**
Housing	**IP20**
Terminals	**IP20**
Mounting area (e.g. control cabinet)	**IP54**
Potential isolation	
Potential isolation between	**Sensor and system voltage**
Type of potential isolation	**Functional insulation**
Rated insulation voltage	**30 V**
Rated surge voltage	**500 V**
Mechanical data	
Mounting position	**horizontally on mounting rail**
DIN rail	
Top hat rail	**35 x 7,5 EN 50022**
Recess width	**27 mm**
Material	
Bottom	**PC**
Front	**PC**
Top	**PC**
Connection type	**Spring-loaded terminal, screw terminal**
Mounting type	**plug-in**
Conductor cross section with screw terminals	
1 core flexible	**0,25 - 2,5 mm², 24 - 12 AWG**
2 core with the same cross section, flexible without crimp connectors or with TWIN crimp connectors	**0,2 - 1,5 mm², 24 - 16 AWG**
Torque setting with screw terminals	**0,5 Nm**
Conductor cross section with spring-loaded terminals: Flexible with/without crimp connector	**0,2 - 2,5 mm², 24 - 12 AWG**
Spring-loaded terminals: Terminal points per connection	**2**
Stripping length with spring-loaded terminals	**9 mm**
Dimensions	
Height	**101,4 mm**
Width	**22,5 mm**
Depth	**120 mm**
Weight	**108 g**

Where standards are undated, the 2018-07 latest editions shall apply.

Analogue input module
PNOZ m EF 4AI

Safety characteristic data

Operating mode	EN ISO 13849-1: 2015 PL	EN ISO 13849-1: 2015 Category	EN 62061 SIL CL	EN 62061 PFH_D [1/h]	IEC 61511 SIL	IEC 61511 PFD	EN ISO 13849-1: 2015 T_M [year]
1-channel	**PL e**	**Cat. 4**	**SIL CL 3**	**2,32E-10**	**SIL 3**	**1,99E-05**	**20**
2-channel	**PL e**	**Cat. 4**	**SIL CL 3**	**2,32E-10**	**SIL 3**	**1,99E-05**	**20**

Explanatory notes for the safety-related characteristic data:

- The SIL CL value in accordance with EN 62061 corresponds to the SIL value in accordance with EN 61508.
- T_M is the maximum mission time in accordance with EN ISO 13849-1. The value also applies as the retest interval in accordance with EN 61508-6 and IEC 61511 and as the proof test interval and mission time in accordance with EN 62061.

All the units used within a safety function must be considered when calculating the safety characteristic data.

Order reference

Product

Product type	Features	Order no.
PNOZ m EF 4AI	Expansion module, 4 analogue inputs	772 160

Accessories

Connection terminals

Product type	Features	Order No.
Set spring terminals	1 set of spring-loaded terminals	751 004
Set screw terminals	1 set of screw terminals	750 004

Terminator, jumper

Product type	Features	Order no.
PNOZ mm0.xp connector left	Jumper yellow/black to connect the modules, 10 pieces	779 260

Input and output modules
PNOZ m EF 8DI4DO

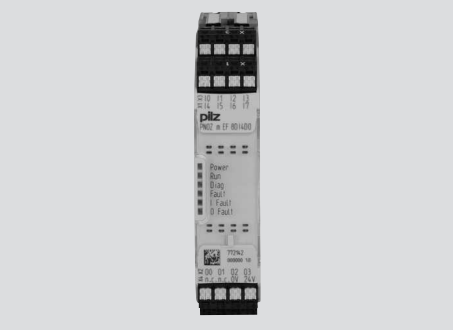

Overview

Unit features

Application of the product PNOZ m EF 8DI4DO:

Expansion module for connection to a base unit from the PNOZmulti 2 system.

The product has the following features:

- Can be configured in the PNOZmulti Configurator
- Semiconductor outputs:

  4 safety outputs
  Depending on the application, up to PL e of EN ISO 13849-1 and up to SIL CL 3 of EN IEC 62061
- 8 inputs for connecting, for example:
  - E-STOP pushbutton
  - Two-hand button
  - Safety gate limit switch
  - Start button
  - Light beam devices
  - Scanner
  - Enabling switch
  - PSEN
  - Operating mode selector switch
- LED for:
  - Error messages
  - Diagnostics
  - Supply voltage
  - Output circuits
  - Input circuits

Input and output modules
PNOZ m EF 8DI4DO

- Test pulse outputs used to monitor shorts across the inputs
- Monitoring of shorts between the safety outputs
- Plug-in connection terminals:
  Either spring-loaded terminal or screw terminal available as an accessory (see order reference)
- Please refer to the document "PNOZmulti System Expansion" for details of the base units PNOZmulti 2 that can be connected.

Front view

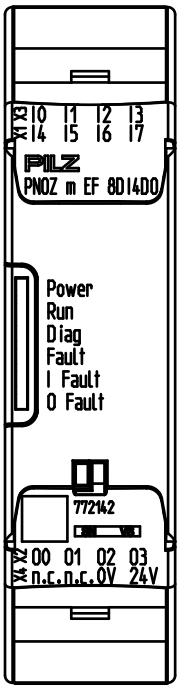

Key:

- 0 V, 24 V: Supply connections
- Inputs I0 – I7
- Outputs O0 – O3
- LEDs:
  - POWER
  - Run
  - Diag
  - Fault
  - I Fault

Input and output modules
PNOZ m EF 8DI4DO

– O Fault

Function description

Functions

The expansion module provides additional inputs and additional semiconductor outputs.

The function of the inputs and outputs on the control system depends on the safety circuit created using the PNOZmulti Configurator. A removable data medium is used to download the safety circuit to the base unit. The base unit has 2 microcontrollers that monitor each other. They evaluate the input circuits on the base unit and expansion modules and switch the outputs on the base unit and expansion modules accordingly.

The online help on the PNOZmulti Configurator contains descriptions of the operating modes and all the functions of the PNOZmulti control system, plus connection examples.

System reaction time

Calculation of the maximum reaction time between an input switching off and a linked output in the system switching off is described in the document "PNOZmulti System Expansion [30]".

Block diagram

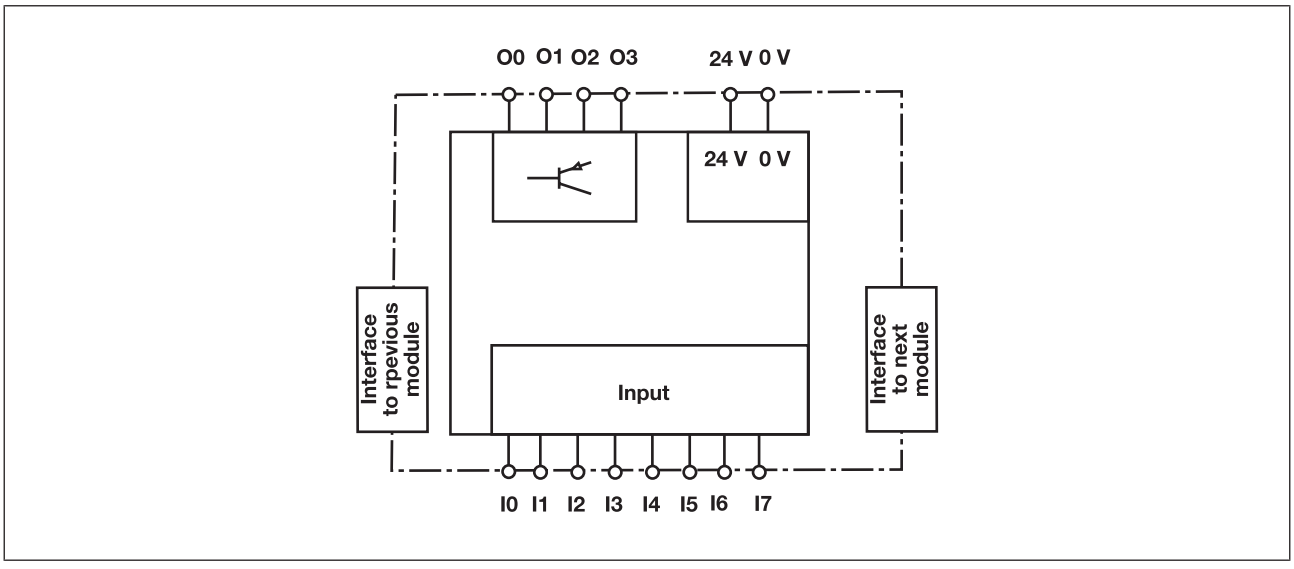

Input and output modules
PNOZ m EF 8DI4DO

Installation

Dimensions in mm

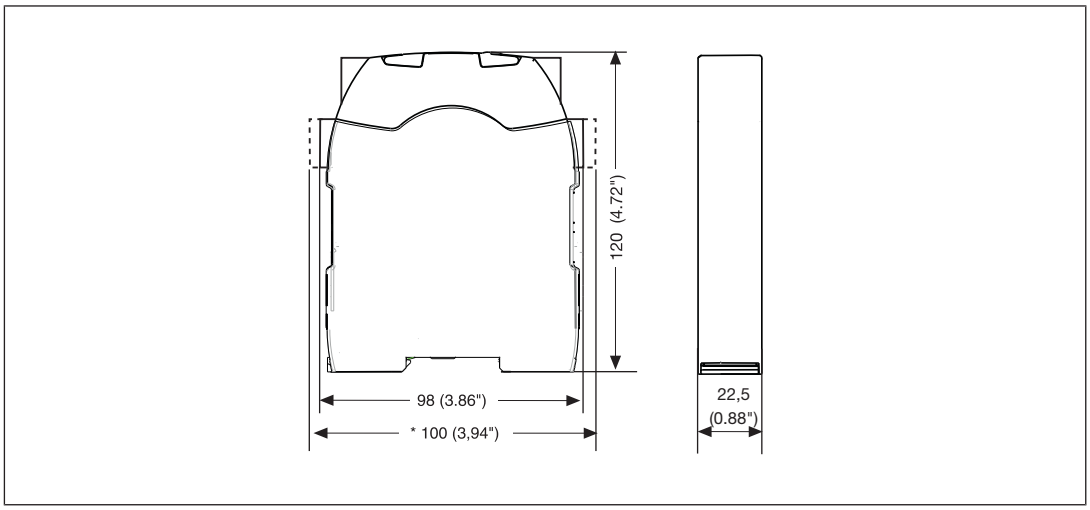

Commissioning

General wiring guidelines

The wiring is defined in the circuit diagram of the PNOZmulti Configurator.

Please note:

- Information given in the Technical details [📖 778] must be followed.
- The position of the expansion module is specified in the Hardware configuration of the PNOZmulti Configurator.
- Use copper wiring with a temperature stability of 75 °C.

Connection

Supply voltage	DC
	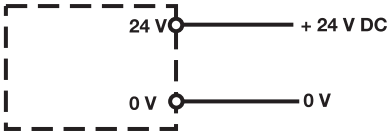

Supply voltage

Input and output modules
PNOZ m EF 8DI4DO

Input circuit	Single-channel	Dual-channel
Example: E-Stop without detection of shorts across contacts	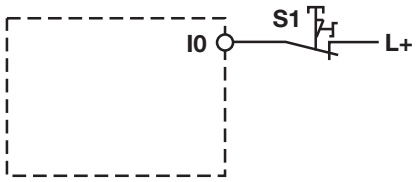	
Example: E-Stop with detection of shorts across contacts	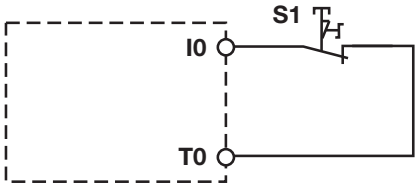	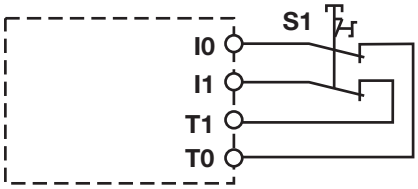

Connection examples for the input circuit

Redundant output	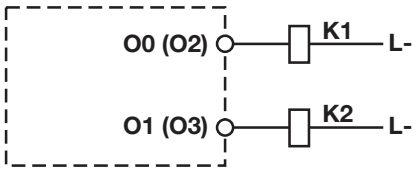	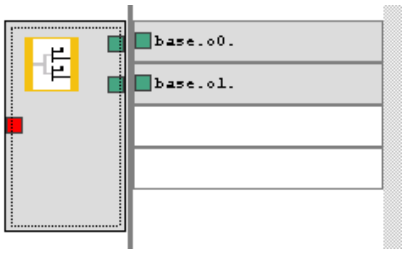
Single output	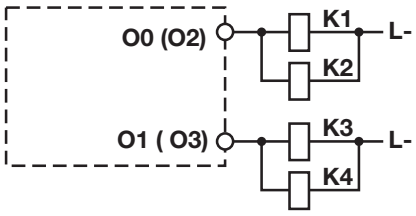	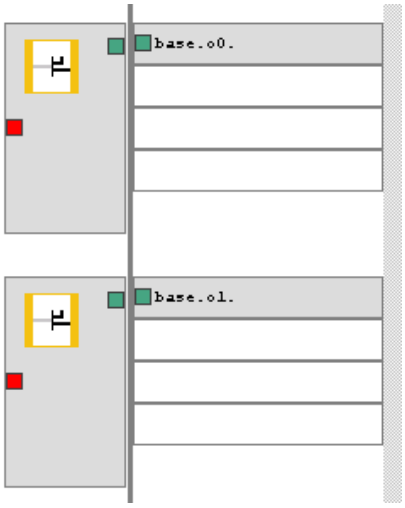
Single output with advanced fault detection*	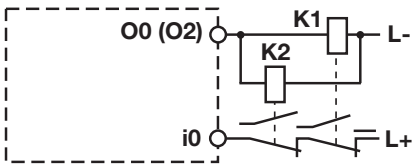	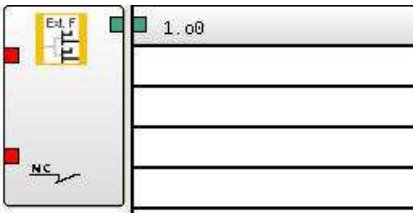

Connection examples for semiconductor outputs

Input and output modules
PNOZ m EF 8DI4DO

*Two loads may be connected to each safety output with advanced fault detection, even on applications in accordance with EN IEC 62061, SIL CL 3. Prerequisite: Feedback loop is connected, shorts across contacts and external power sources are excluded (e.g. through separate multicore cables). Please note that, in the event of an error in the feedback loop, the safety system switches to a safe condition and shuts down **all** the outputs.

Feedback loop	Redundant output
Contacts from external contactors	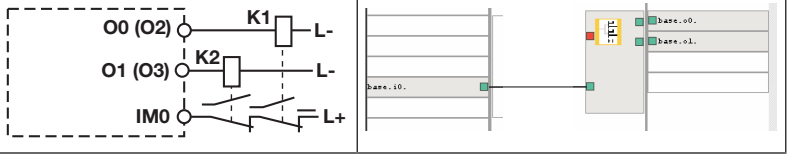

Connection examples for feedback loop

Technical details

General	
Certifications	**CE, EAC (Eurasian), KOSHA, TÜV, cULus Listed**
Application range	**Failsafe**
Module's device code	**00E0h**
Electrical data	
Supply voltage	
for	**Supply to the SC outputs**
Voltage	**24 V**
Kind	**DC**
Voltage tolerance	**-20 %/+25 %**
Max. continuous current that the external power supply must provide	**8 A**
Potential isolation	**yes**
Supply voltage	
for	**Module supply**
internal	**Via base unit**
Voltage	**24 V**
Kind	**DC**
Current consumption	**39 mA**
Power consumption	**1 W**
Max. power dissipation of module	**4,5 W**
Status indicator	**LED**
Permitted loads	**inductive, capacitive, resistive**
Inputs	
Number	**8**
Input voltage in accordance with EN 61131-2 Type 1	**24 V DC**

Input and output modules
PNOZ m EF 8DI4DO

Inputs	
Input current at rated voltage	**5 mA**
Input current range	**2,5 - 5,3 mA**
Pulse suppression	**0,5 ms**
Maximum input delay	**8 ms**
Potential isolation	**No**
Semiconductor outputs	
Number of positive-switching single-pole semiconductor outputs	**4**
Switching capability	
Voltage	**24 V**
Typ. output current at "1" signal and rated voltage of semiconductor output	**2 A**
Permitted current range	**0,000 - 2,500 A**
Residual current at "0" signal	**0,05 mA**
Max. transient pulsed current	**12 A**
Max. capacitive load	**1 µF**
Max. internal voltage drop	**500 mV**
Max. duration of off time during self test	**330 µs**
Switch-off delay	**3 ms**
Potential isolation	**yes**
Short circuit-proof	**yes**
Environmental data	
Ambient temperature	
In accordance with the standard	**EN 60068-2-14**
Temperature range	**0 - 60 °C**
Forced convection in control cabinet off	**55 °C**
Storage temperature	
In accordance with the standard	**EN 60068-2-1/-2**
Temperature range	**-25 - 70 °C**
Climatic suitability	
In accordance with the standard	**EN 60068-2-30, EN 60068-2-78**
Condensation during operation	**Not permitted**
Max. operating height above sea level	**2000 m**
EMC	**EN 61131-2**
Vibration	
In accordance with the standard	**EN 60068-2-6**
Frequency	**5 - 150 Hz**
Acceleration	**1g**

Input and output modules
PNOZ m EF 8DI4DO

Environmental data	
Shock stress	
In accordance with the standard	**EN 60068-2-27**
Acceleration	**15g**
Duration	**11 ms**
Airgap creepage	
In accordance with the standard	**EN 61131-2**
Overvoltage category	**II**
Pollution degree	**2**
Protection type	
In accordance with the standard	**EN 60529**
Housing	**IP20**
Terminals	**IP20**
Mounting area (e.g. control cabinet)	**IP54**
Potential isolation	
Potential isolation between	**SC output and system voltage**
Type of potential isolation	**Basic insulation**
Rated insulation voltage	**30 V**
Rated surge voltage	**2500 V**
Mechanical data	
Mounting position	**horizontally on mounting rail**
DIN rail	
Top hat rail	**35 x 7,5 EN 50022**
Recess width	**27 mm**
Max. cable length	
Max. cable length per input	**1 km**
Material	
Bottom	**PC**
Front	**PC**
Top	**PC**
Connection type	**Spring-loaded terminal, screw terminal**
Mounting type	**plug-in**
Conductor cross section with screw terminals	
1 core flexible	**0,25 - 2,5 mm², 24 - 12 AWG**
2 core with the same cross section, flexible without crimp connectors or with TWIN crimp connectors	**0,2 - 1,5 mm², 24 - 16 AWG**
Torque setting with screw terminals	**0,5 Nm**
Conductor cross section with spring-loaded terminals: Flexible with/without crimp connector	**0,2 - 2,5 mm², 24 - 12 AWG**
Spring-loaded terminals: Terminal points per connection	**2**
Stripping length with spring-loaded terminals	**9 mm**

Input and output modules
PNOZ m EF 8DI4DO

Mechanical data	
Dimensions	
Height	**101,4 mm**
Width	**22,5 mm**
Depth	**120 mm**
Weight	**105 g**

Where standards are undated, the 2018-09 latest editions shall apply.

Safety characteristic data

Unit	Operating mode	EN ISO 13849-1: 2015 PL	EN ISO 13849-1: 2015 Category	EN 62061 SIL CL	EN 62061 PFH_D [1/h]	EN ISO 13849-1: 2015 T_M [year]
Logic						
CPU	**2-channel**	**PL e**	**Cat. 4**	**SIL CL 3**	**2,84E-10**	**20**
Input						
SC inputs	**1-channel**	**PL d**	**Cat. 2**	**SIL CL 2**	**2,10E-09**	**20**
SC inputs	**2-channel**	**PL e**	**Cat. 4**	**SIL CL 3**	**4,27E-11**	**20**
SC inputs	**Short circuit-forming safety mats**	**PL d**	**Cat. 3**	**SIL CL 2**	**1,80E-10**	**20**
SC inputs	**1-ch., pulsed light barrier**	**PL e**	**Cat. 4**	**SIL CL 3**	**2,10E-10**	**20**
Output						
SC outputs	**1-channel with advanced fault detection**	**PL e**	**Cat. 4**	**SIL CL 3**	**2,12E-11**	**20**
SC outputs	**1-channel**	**PL d**	**Cat. 2**	**SIL CL 2**	**2,29E-10**	**20**
SC outputs	**2-channel**	**PL e**	**Cat. 4**	**SIL CL 3**	**1,64E-10**	**20**

Explanatory notes for the safety-related characteristic data:

- The SIL CL value in accordance with EN 62061 corresponds to the SIL value in accordance with EN 61508.
- T_M is the maximum mission time in accordance with EN ISO 13849-1. The value also applies as the retest interval in accordance with EN 61508-6 and IEC 61511 and as the proof test interval and mission time in accordance with EN 62061.

Input and output modules
PNOZ m EF 8DI4DO

All the units used within a safety function must be considered when calculating the safety characteristic data.

Classification according to ZVEI, CB24I

The following tables describe the classes and specific values of the product interface and the classes of interfaces compatible with it. The classification is described in the ZVEI position paper "Classification of Binary 24 V Interfaces - Functional Safety aspects covered by dynamic testing".

Input	
Interfaces	
Drain	
Interface	**Module**
Class	**C2**
Source	
Interface	**Sensor**
Class	**C2, C3**
Drain parameters	
Test pulse duration, safety outputs	**500 µs**
Min. input resistance	**5,6 kOhm**
Max. capacitive load	**126 nF**

Single-pole output	
Interfaces	
Source	
Interface	**Module**
Class	**C2**
Drain	
Interface	**Actuator**
Class	**C1, C2**
Source parameters	
Max. test pulse duration	**330 µs**
Max. rated current	**2 A**
Max. capacitive load	**1 µF**

Input and output modules
PNOZ m EF 8DI4DO

Supplementary data

Permitted ambient temperature Tamb dependent on the total current Isum

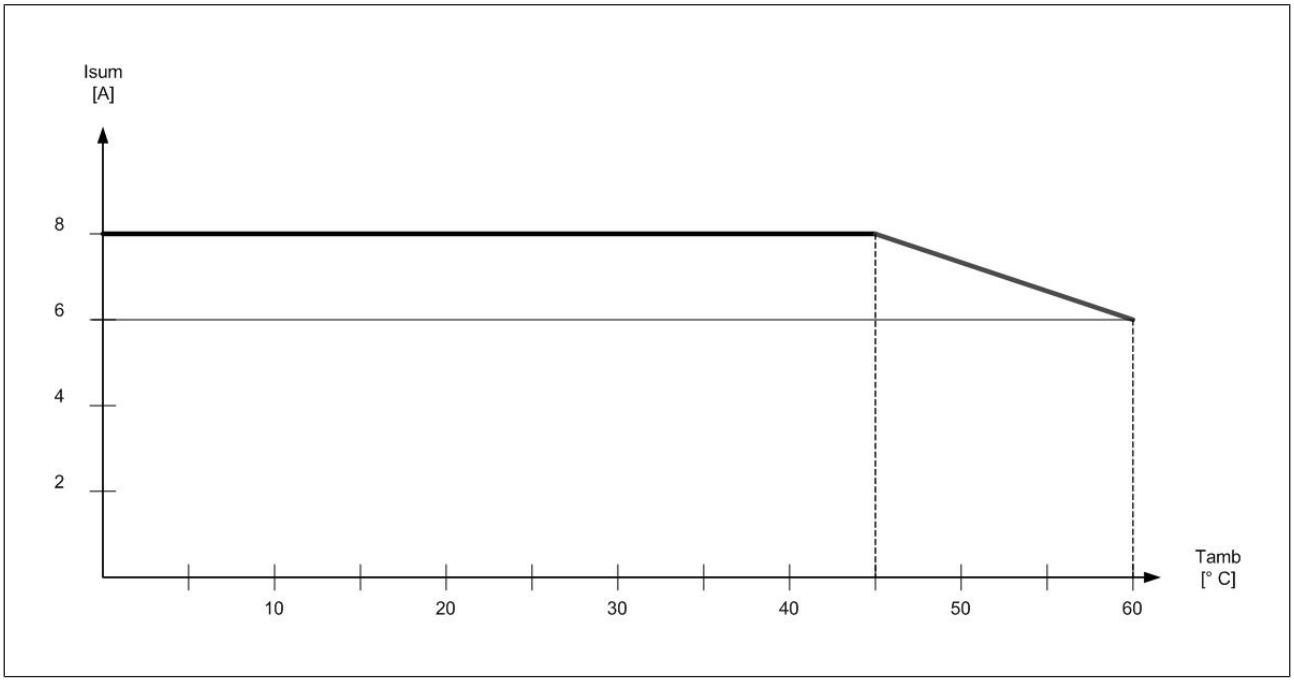

Order reference

Product

Product type	Features	Order No.
PNOZ m EF 8DI4DO	Expansion module	772 142

Accessories

Connection terminals

Product type	Features	Order No.
Set spring terminals	1 set of spring-loaded terminals	751 004
Set screw terminals	1 set of screw terminals	750 004

Input and output modules
PNOZ m EF 8DI4DO

Terminator, jumper

Product type	Features	Order no.
PNOZ mm0.xp connector left	Jumper yellow/black to connect the modules, 10 pieces	779 260

Input and output modules
PNOZ m EF 4DI4DOR



Overview

Unit features

Application of the product PNOZ m EF 4DI4DOR:

Expansion module for connection to a base unit from the PNOZmulti 2 system.

The product has the following features:

- Can be configured in the PNOZmulti Configurator
- Positive-guided relay outputs:

  4 safety outputs
  Depending on the application, up to PL e of EN ISO 13849-1 and up to SIL CL 3 of EN IEC 62061
- 4 inputs for connecting, for example:
  - E-STOP pushbutton
  - Two-hand button
  - Safety gate limit switch
  - Start button
  - Light beam devices
  - Scanner
  - Enabling switch
  - PSEN
  - Operating mode selector switch
- LED for:
  - Error messages
  - Diagnostics
  - Supply voltage
  - Output circuits
  - Input circuits

Input and output modules
PNOZ m EF 4DI4DOR

- Test pulse outputs used to monitor shorts across the inputs
- Monitoring of shorts between the safety outputs
- Plug-in connection terminals:
  Either spring-loaded terminal or screw terminal available as an accessory (see order reference)
- Please refer to the document "PNOZmulti System Expansion" for the PNOZmulti base units that can be connected.

Front view

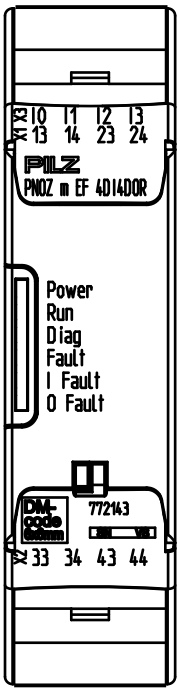

Legend:

- Inputs I0 – I3
- Outputs O0 – O3
- LEDs:
  - POWER
  - Run
  - Diag
  - Fault
  - I Fault
  - O Fault

Input and output modules
PNOZ m EF 4DI4DOR

Function description

Functions

The expansion module provides additional inputs and additional relay outputs.

The function of the inputs and outputs on the control system depends on the safety circuit created using the PNOZmulti Configurator. A removable data medium is used to download the safety circuit to the base unit. The base unit has 2 microcontrollers that monitor each other. They evaluate the input circuits on the base unit and expansion modules and switch the outputs on the base unit and expansion modules accordingly.

The online help on the PNOZmulti Configurator contains descriptions of the operating modes and all the functions of the PNOZmulti control system, plus connection examples.

System reaction time

Calculation of the maximum reaction time between an input switching off and a linked output in the system switching off is described in the document "PNOZmulti System Expansion [30]".

Block diagram

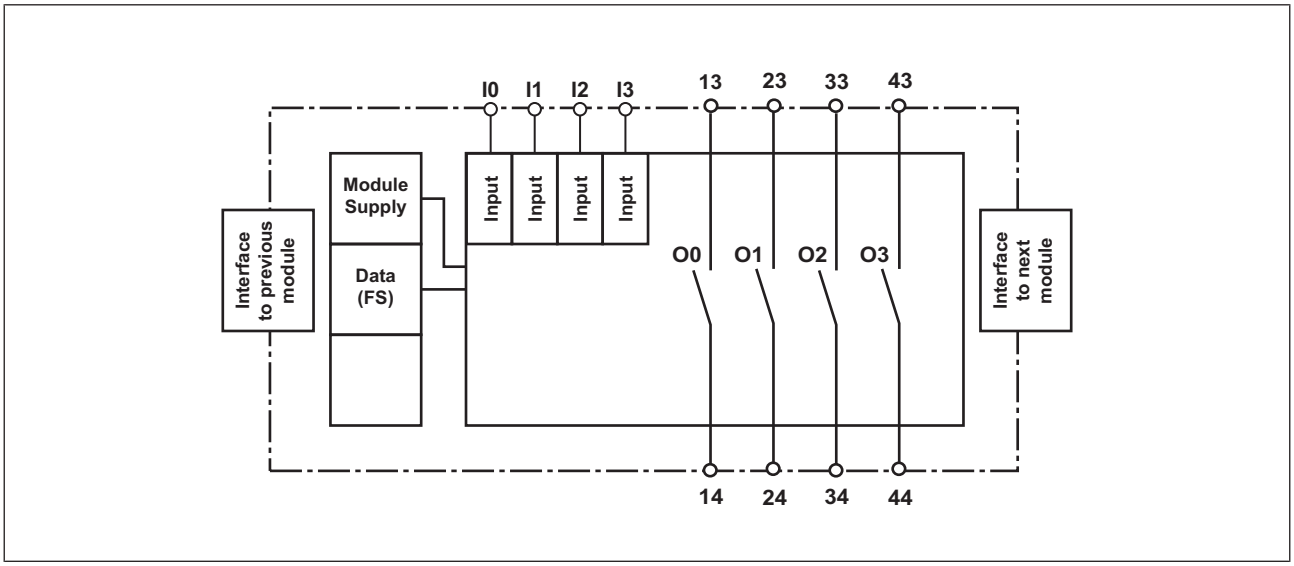

Input and output modules
PNOZ m EF 4DI4DOR

Installation

Dimensions in mm

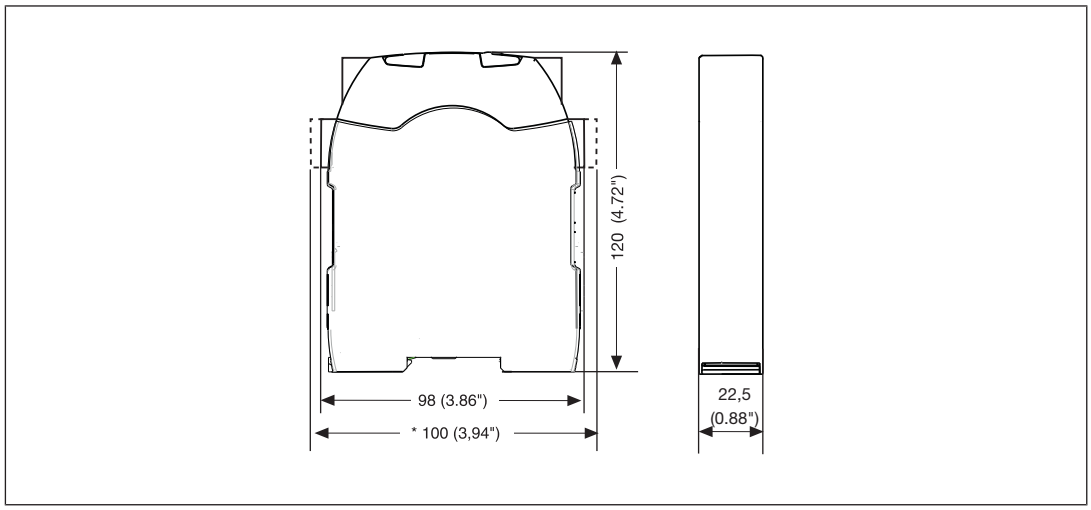

Commissioning

General wiring guidelines

The wiring is defined in the circuit diagram of the PNOZmulti Configurator.

Please note:

- Information given in the Technical details [📖 791] must be followed.
- The position of the expansion module is specified in the Hardware configuration of the PNOZmulti Configurator.
- Use copper wiring with a temperature stability of 75 °C.
- To prevent contact welding, a fuse should be connected before the output contacts (see Technical details [📖 791]).
- Adequate protection must be provided on all output contacts with capacitive and inductive loads.

Input and output modules
PNOZ m EF 4DI4DOR

Connection

Input circuit	Single-channel	Dual-channel
Example: E-Stop without detection of shorts across contacts	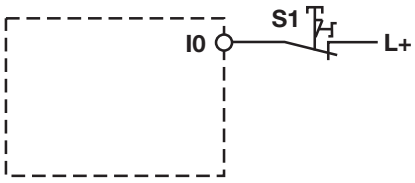	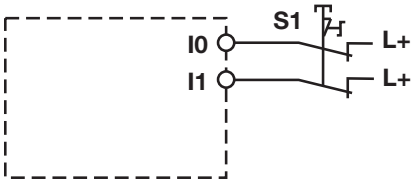
Example: E-Stop with detection of shorts across contacts	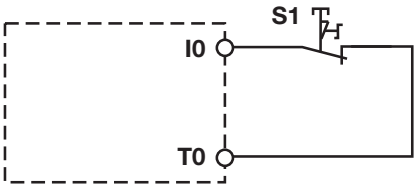	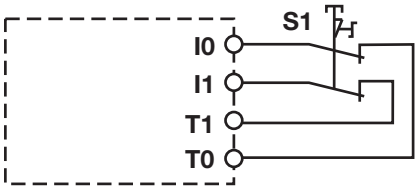
Relay outputs		
Dual output	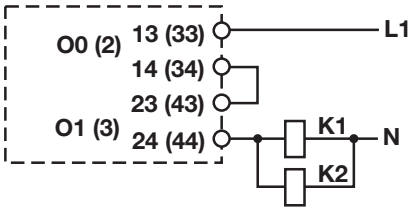	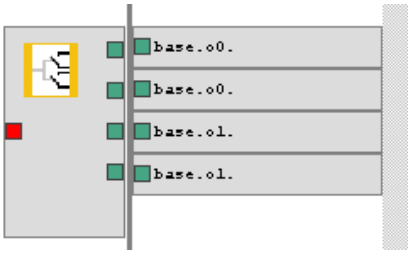
Single output	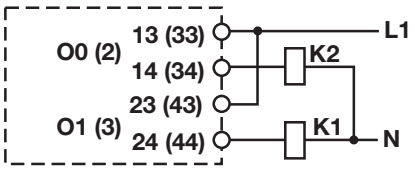	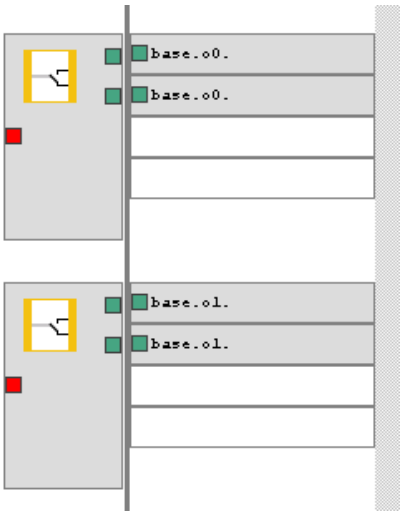

Input and output modules
PNOZ m EF 4DI4DOR

Feedback loop	Dual output	
Contacts from external contactors	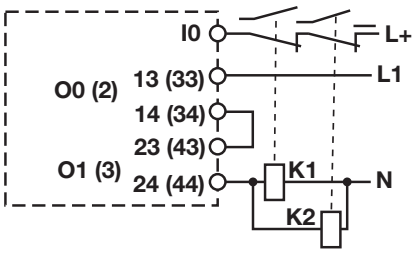	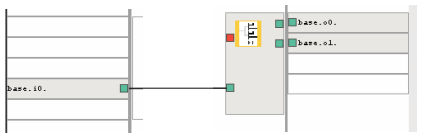

Input and output modules
PNOZ m EF 4DI4DOR

Technical details

General	
Certifications	**CCC, CE, EAC (Eurasian), KOSHA, TÜV, cULus Listed**
Application range	**Failsafe**
Module's device code	**00E1h**
Electrical data	
Supply voltage	
for	**Module supply**
internal	**Via base unit**
Voltage	**24 V**
Kind	**DC**
Current consumption	**122 mA**
Power consumption	**3 W**
Max. power dissipation of module	**6,5 W**
Status indicator	**LED**
Permitted loads	**inductive, resistive**
Inputs	
Number	**4**
Input voltage in accordance with EN 61131-2 Type 1	**24 V DC**
Input current at rated voltage	**5 mA**
Input current range	**2,5 - 5,3 mA**
Pulse suppression	**0,5 ms**
Maximum input delay	**8 ms**
Potential isolation	**No**
Relay outputs	
Number of relay outputs	**4**
Utilisation category	
In accordance with the standard	**EN 60947-4-1**
Utilisation category of safety contacts	
AC1 at	**250 V**
Min. current	**10 mA**
Max. current	**6 A**
Max. power	**1500 VA**
DC1 at	**24 V**
Min. current	**10 mA**
Max. current	**6 A**
Max. power	**144 W**
Utilisation category	
In accordance with the standard	**EN 60947-5-1**

Input and output modules
PNOZ m EF 4DI4DOR

Relay outputs	
Utilisation category of safety contacts	
AC15 at	**230 V**
Max. current	**3 A**
Max. power	**690 W**
DC13 (6 cycles/min) at	**24 V**
Max. current	**3 A**
Max. power	**72 W**
Utilisation category in accordance with UL	
Voltage	**240 V AC G.U. Resistive**
With current	**6 A**
Voltage	**24 V DC G. U. Resistive**
With current	**6 A**
Pilot Duty; R300	**24 V DC**
With current	**3 A**
Pilot Duty; B300	**230 V AC**
With current	**3 A**
Airgap creepage between	
Relay contacts	**3 mm**
Relay contacts and other circuits	**5,5 mm**
External contact fuse protection, safety contacts	
In accordance with the standard	**VDE 0660**
Blow-out fuse, quick	**10 A**
Blow-out fuse, slow	**6 A**
Switch-off delay	**22 ms**
Contact material	**AgCuNi + 0,2 µm Au**
Potential isolation	**yes**
Environmental data	
Ambient temperature	
In accordance with the standard	**EN 60068-2-14**
Temperature range	**0 - 60 °C**
Forced convection in control cabinet off	**55 °C**
Storage temperature	
In accordance with the standard	**EN 60068-2-1/-2**
Temperature range	**-25 - 70 °C**
Climatic suitability	
In accordance with the standard	**EN 60068-2-30, EN 60068-2-78**
Condensation during operation	**Not permitted**
Max. operating height above sea level	**2000 m**
EMC	**EN 61131-2**

Input and output modules
PNOZ m EF 4DI4DOR

Environmental data	
Vibration	
In accordance with the standard	**EN 60068-2-6**
Frequency	**5 - 150 Hz**
Acceleration	**1g**
Shock stress	
In accordance with the standard	**EN 60068-2-27**
Acceleration	**15g**
Duration	**11 ms**
Airgap creepage	
In accordance with the standard	**EN 61131-2**
Overvoltage category	**II**
Pollution degree	**2**
Protection type	
In accordance with the standard	**EN 60529**
Housing	**IP20**
Terminals	**IP20**
Mounting area (e.g. control cabinet)	**IP54**
Potential isolation	
Potential isolation between	**Relay output and system voltage**
Type of potential isolation	**Protective separation**
Rated insulation voltage	**250 V**
Rated surge voltage	**4000 V**
Mechanical data	
Mounting position	**horizontally on mounting rail**
Mechanical life	**10,000,000 cycles**
DIN rail	
Top hat rail	**35 x 7,5 EN 50022**
Recess width	**27 mm**
Max. cable length	
Max. cable length per input	**1 km**
Material	
Bottom	**PC**
Front	**PC**
Top	**PC**
Connection type	**Spring-loaded terminal, screw terminal**
Mounting type	**plug-in**
Conductor cross section with screw terminals	
1 core flexible	**0,25 - 2,5 mm², 24 - 12 AWG**
2 core with the same cross section, flexible without crimp connectors or with TWIN crimp connectors	**0,2 - 1,5 mm², 24 - 16 AWG**
Torque setting with screw terminals	**0,5 Nm**

Input and output modules
PNOZ m EF 4DI4DOR

Mechanical data	
Conductor cross section with spring-loaded terminals: Flexible with/without crimp connector	**0,2 - 2,5 mm², 24 - 12 AWG**
Spring-loaded terminals: Terminal points per connection	**2**
Stripping length with spring-loaded terminals	**9 mm**
Dimensions	
Height	**101,4 mm**
Width	**22,5 mm**
Depth	**120 mm**
Weight	**190 g**

Where standards are undated, the 2012-04 latest editions shall apply.

Safety characteristic data

Unit	Operating mode	EN ISO 13849-1: 2015 PL	EN ISO 13849-1: 2015 Category	EN 62061 SIL CL	EN 62061 PFH_D [1/h]	EN ISO 13849-1: 2015 T_M [year]
Logic						
CPU	**2-channel**	**PL e**	**Cat. 4**	**SIL CL 3**	**2,84E-10**	**20**
Input						
SC inputs	**1-channel**	**PL d**	**Cat. 2**	**SIL CL 2**	**2,10E-09**	**20**
SC inputs	**2-channel**	**PL e**	**Cat. 4**	**SIL CL 3**	**4,27E-11**	**20**
SC inputs	**Short circuit-forming safety mats**	**PL d**	**Cat. 3**	**SIL CL 2**	**1,80E-10**	**20**
SC inputs	**1-ch., pulsed light barrier**	**PL e**	**Cat. 4**	**SIL CL 3**	**2,10E-10**	**20**
Output						
Relay outputs	**1-channel**	**PL c**	**Cat. 1**	**-**	**3,75E-08**	**20**
Relay outputs	**2-channel**	**PL e**	**Cat. 4**	**SIL CL 3**	**7,52E-12**	**20**

All the units used within a safety function must be considered when calculating the safety characteristic data.

The PFH value depends on the switch frequency and the load of the relay output.
If the service life graphs are not accessible, the stated PFH value can be used irrespective of the switch frequency and the load, as the PFH value already considers the relay's B10d value as well as the failure rates of the other components.

Input and output modules
PNOZ m EF 4DI4DOR

Classification according to ZVEI, CB24I

The following tables describe the classes and specific values of the product interface and the classes of interfaces compatible with it. The classification is described in the ZVEI position paper "Classification of Binary 24 V Interfaces - Functional Safety aspects covered by dynamic testing".

Input	
Interfaces	
Drain	
Interface	**Module**
Class	**C2**
Source	
Interface	**Sensor**
Class	**C2, C3**
Drain parameters	
Max. test pulse duration	**500 µs**
Min. input resistance	**5,6 kOhm**
Max. capacitive load	**126 nF**

Relay outputs	
Interfaces	
Source	
Drain	
Source parameters	
Min. switching current	**10 mA**
Max. switching current	**6 A**

Input and output modules
PNOZ m EF 4DI4DOR

Supplementary data

Service life graph for the relay contacts

The service life graphs indicate the number of cycles from which failures due to wear must be expected. The wear is mainly caused by the electrical load; the mechanical load is negligible.

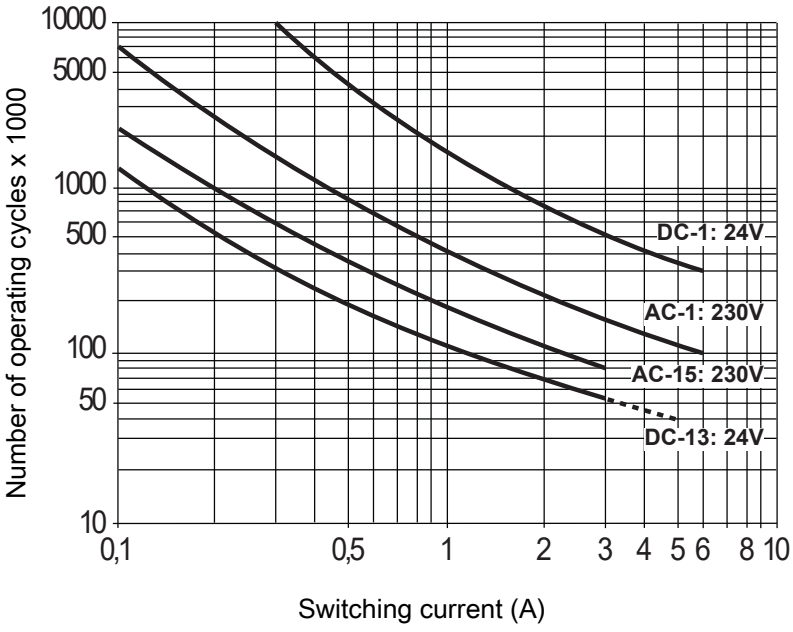

Fig.: Service life graphs at 24 VDC and 230 VAC

Input and output modules
PNOZ m EF 4DI4DOR

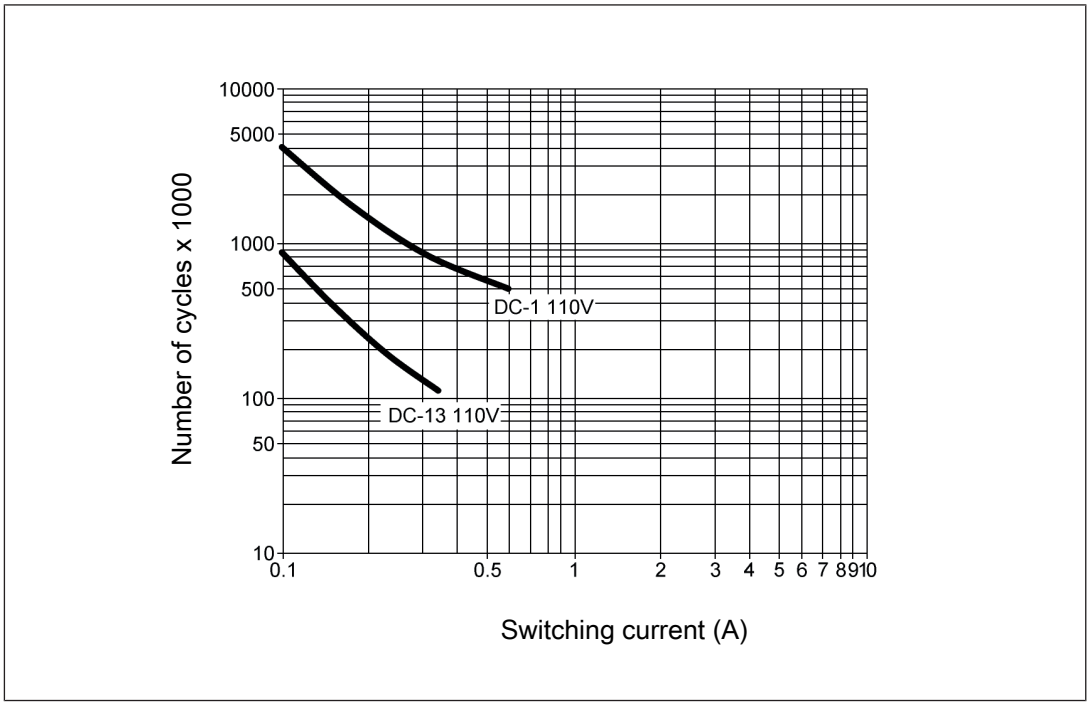

Fig.: Service life graphs at 110 VDC

Example

- Inductive load: 0.2 A
- Utilisation category: AC15
- Contact service life: 1 000 000 cycles

Provided the application to be implemented requires fewer than 1 000 000 cycles, the PFH value (see Technical details [📖 791]) can be used in the calculation.

To increase the service life, sufficient spark suppression must be provided on all relay contacts. With capacitive loads, any power surges that occur must be noted. With DC contactors, use flywheel diodes for spark suppression.

We recommend you use semiconductor outputs to switch 24 VDC loads.

Input and output modules
PNOZ m EF 4DI4DOR

Permitted ambient temperature Tamb dependent on the total current Isum

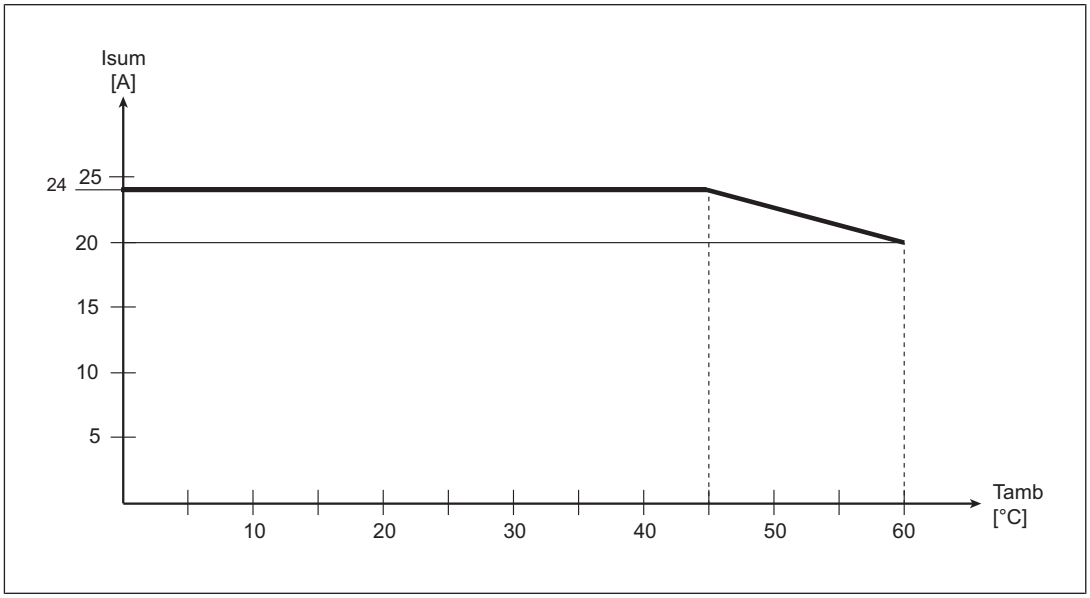

Max. permitted total current of relay outputs at an ambient temperature of < 45 °C: 24 A

Max. permitted total current of relay outputs at an ambient temperature of = 60 °C: 20 A

Input and output modules
PNOZ m EF 4DI4DOR

Order reference

Product

Product type	Features	Order No.
PNOZ m EF 4DI4DOR	Expansion module	772 143

Accessories

Connection terminals

Product type	Features	Order No.
Set spring terminals	1 set of spring-loaded terminals	751 004
Set screw terminals	1 set of screw terminals	750 004

Terminator, jumper

Product type	Features	Order no.
PNOZ mm0.xp connector left	Jumper yellow/black to connect the modules, 10 pieces	779 260

Input and output modules
PNOZ m EF 4DI4DORD

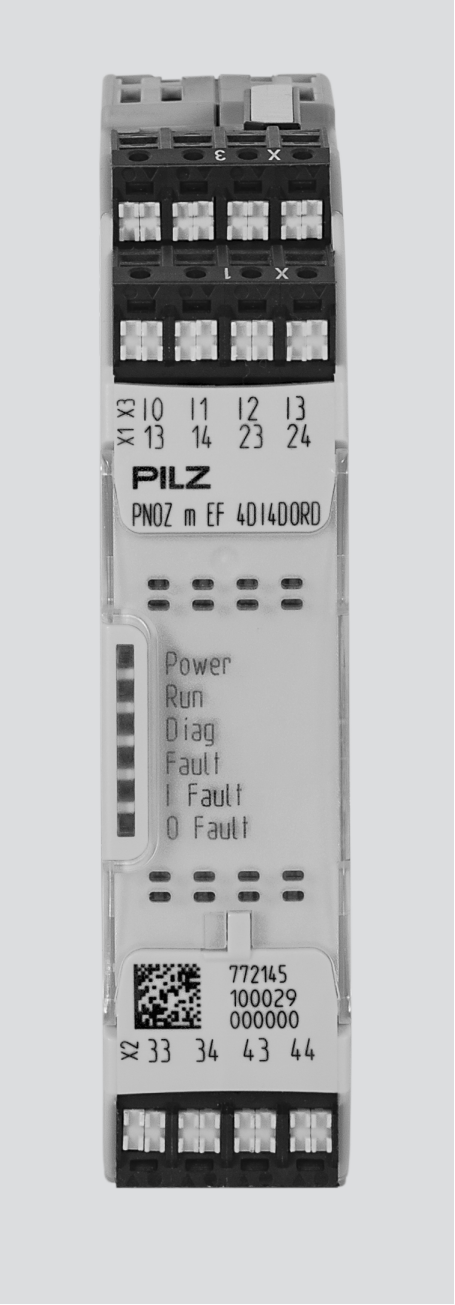

Overview

Unit features

Application of the product PNOZ m EF 4DI4DORD:

Expansion module for connection to a base unit from the PNOZmulti 2 system.

The product has the following features:

Input and output modules
PNOZ m EF 4DI4DORD

- Can be configured in the PNOZmulti Configurator
- Positive-guided relay outputs, diverse:

  4 safety outputs
  up to PL e of EN ISO 13849-1 and SIL CL 3 of EN IEC 62061, depending on the application
  suitable for controlling the safety valves of a burner in accordance with EN 50156.
- 4 inputs for connecting, for example:
  - Emergency stop pushbutton
  - Two-hand pushbuttons
  - Safety gate limit switches
  - Start button
  - Light barriers
  - Scanner
  - Enabling switch
  - PSEN
  - Operating mode selector switch
- LED display for:
  - Error messages
  - Diagnostics
  - Supply voltage
  - Output circuits
  - Input circuits
- Test pulse outputs used to monitor shorts across the inputs
- Monitoring of shorts between the safety outputs
- Plug-in connection terminals:
  Either spring-loaded terminal or screw terminal available as accessories (see Order references)
- Please refer to the document "PNOZmulti System Expansion" for the PNOZmulti base units that can be connected.

Input and output modules
PNOZ m EF 4DI4DORD

Front view

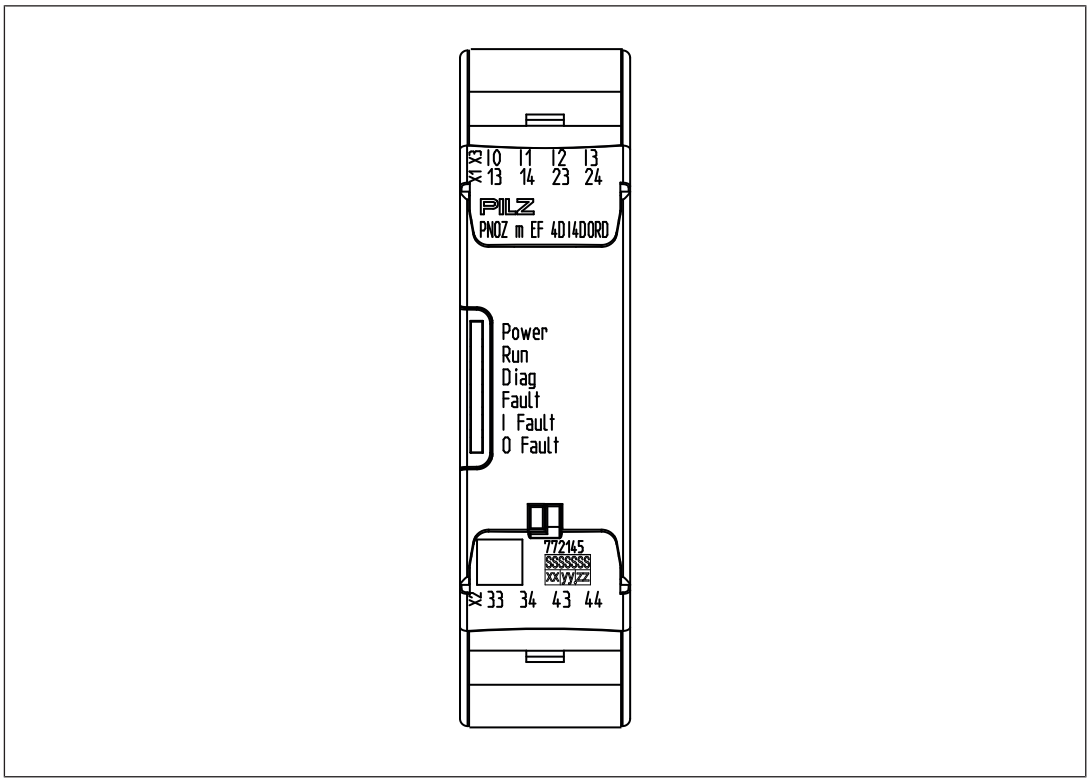

Legend:

- Inputs I0 – I3
- Outputs O0 – O3
- LEDs:
  - POWER
  - Run
  - Diag
  - Fault
  - I Fault
  - O Fault

Function description

Integrated protection mechanisms

The relay meets the following safety requirements:

- The circuit is redundant with built-in self-monitoring.
- The safety device remains effective in the case of a component failure.

Input and output modules
PNOZ m EF 4DI4DORD

- The relay contacts meet the requirements for protective separation through increased insulation compared with all other circuits in the safety system.
- A defective relay contact will be detected during switching.

Functions

The expansion module provides additional inputs and diverse relay outputs.

The function of the inputs and outputs on the control system depends on the safety circuit created using the PNOZmulti Configurator. A removable data medium is used to download the safety circuit to the base unit. The base unit has 2 microcontrollers that monitor each other. They evaluate the input circuits on the base unit and expansion modules and switch the outputs on the base unit and expansion modules accordingly.

The online help on the PNOZmulti Configurator contains descriptions of the operating modes and all the functions of the PNOZmulti control system, plus connection examples.

System reaction time

Calculation of the maximum reaction time between an input switching off and a linked output in the system switching off is described in the document "PNOZmulti System Expansion [30]".

Block diagram

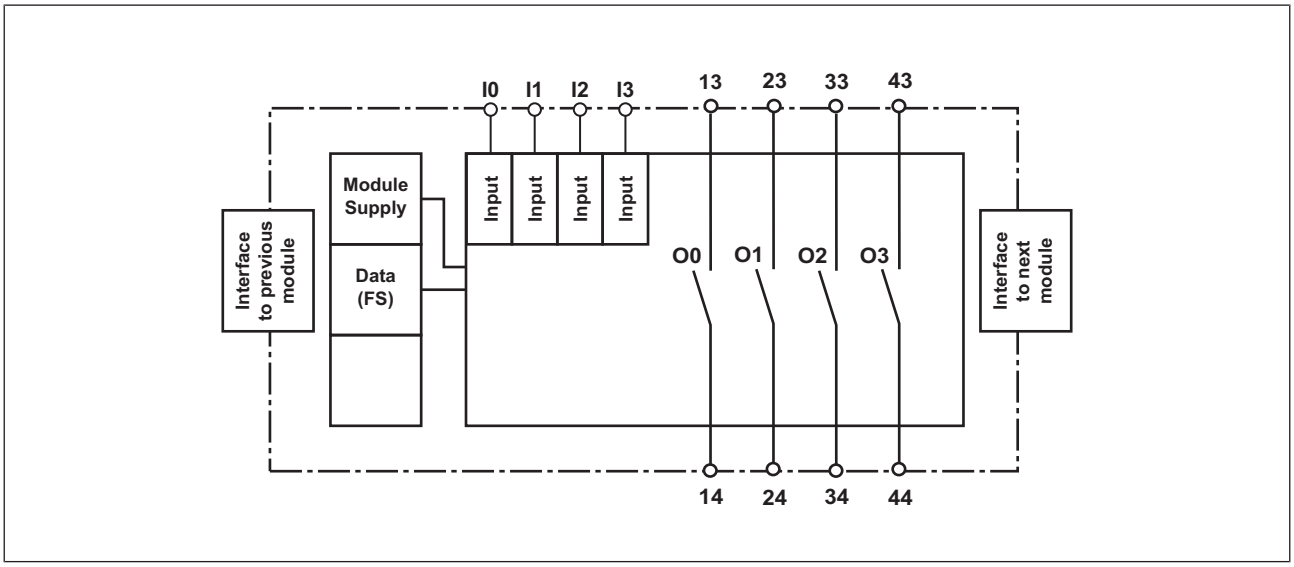

Input and output modules
PNOZ m EF 4DI4DORD

Installation

Dimensions in mm

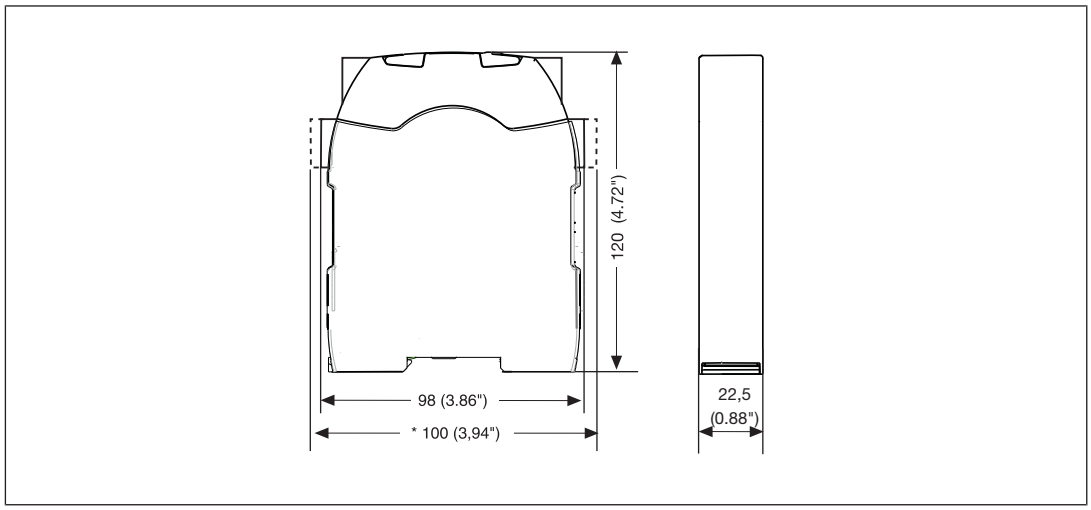

Commissioning

General wiring guidelines

The wiring is defined in the circuit diagram of the PNOZmulti Configurator.

Please note:

- Information given in the Technical details [📖 807] must be followed.
- The position of the expansion module is specified in the Hardware configuration of the PNOZmulti Configurator.
- Use copper wiring with a temperature stability of 75 °C.
- To prevent contact welding, a fuse should be connected before the output contacts (see Technical details [📖 807]).
- Adequate protection must be provided on all output contacts with capacitive and inductive loads.

Input and output modules
PNOZ m EF 4DI4DORD

Connection

Input circuit	Single-channel	Dual-channel
Example: Emergency stop without detection of shorts across contacts	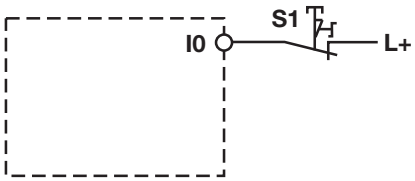	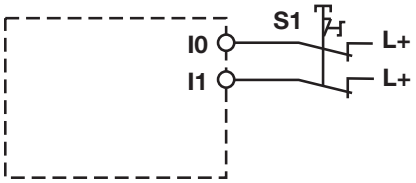
Example: Emergency stop with detection of shorts across contacts	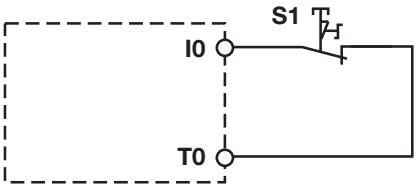	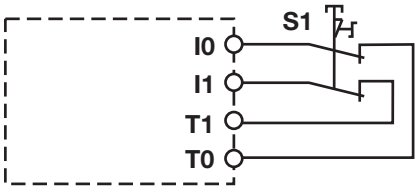
Relay outputs		
Redundant, diverse output	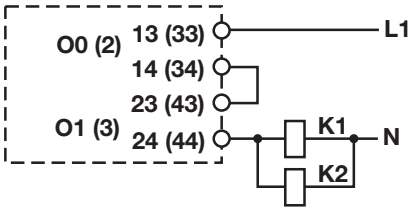	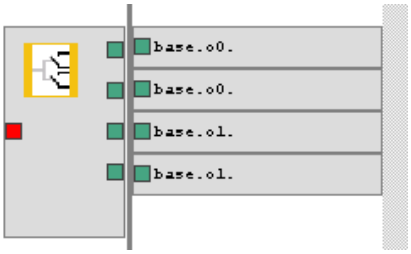
Single output	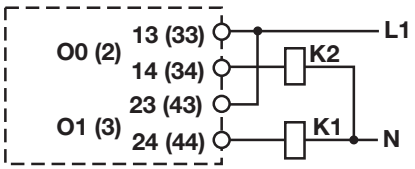	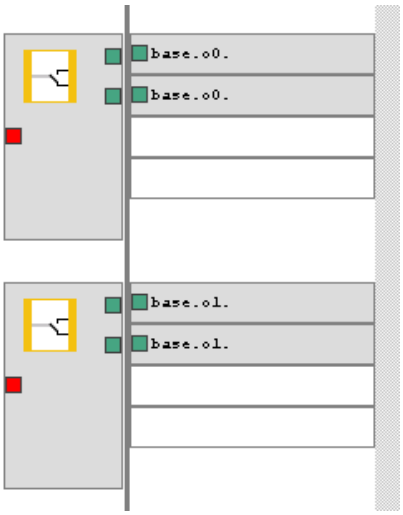

Input and output modules
PNOZ m EF 4DI4DORD

Feedback loop	Redundant, diverse output	
Contacts from external contactors	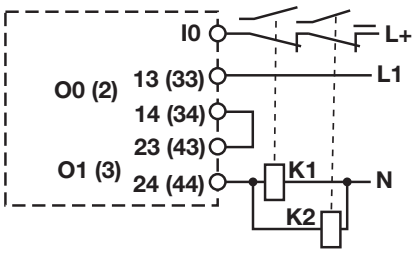	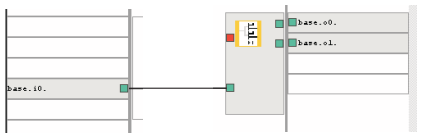

Connecting the safety valves on a burner in accordance with EN 50156

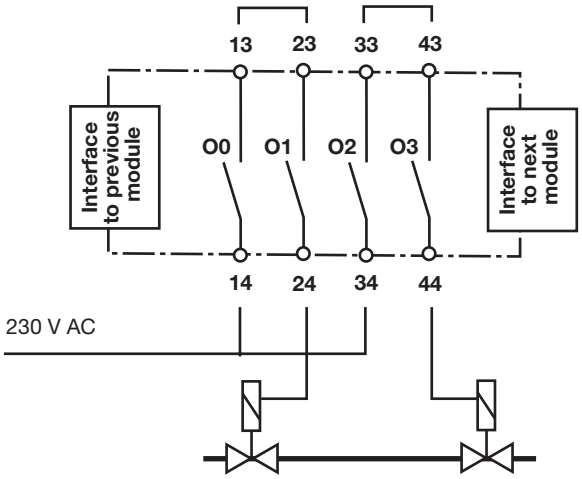

Maintenance and testing

It is not necessary to perform maintenance work on the product in normal operation. Please return any faulty products to Pilz.

Input and output modules
PNOZ m EF 4DI4DORD

Technical details

General	
Certifications	**CE, TÜV**
Application range	**Failsafe**
Module's device code	**00E9h**
Electrical data	
Supply voltage	
for	**Module supply**
internal	**Via base unit**
Voltage	**24 V**
Kind	**DC**
Current consumption	**122 mA**
Power consumption	**3 W**
Max. power dissipation of module	**6,5 W**
Status indicator	**LED**
Permitted loads	**inductive, resistive**
Inputs	
Number	**4**
Input voltage in accordance with EN 61131-2 Type 1	**24 V DC**
Input current at rated voltage	**5 mA**
Input current range	**2,5 - 5,3 mA**
Pulse suppression	**0,5 ms**
Maximum input delay	**8 ms**
Potential isolation	**No**
Relay outputs	
Number of relay outputs	**4**
Utilisation category	
In accordance with the standard	**EN 60947-4-1**
Utilisation category of safety contacts	
AC1 at	**250 V**
Min. current	**10 mA**
Max. current	**6 A**
Max. power	**1500 VA**
DC1 at	**24 V**
Min. current	**10 mA**
Max. current	**6 A**
Max. power	**144 W**
Utilisation category	
In accordance with the standard	**EN 60947-5-1**

Input and output modules
PNOZ m EF 4DI4DORD

Relay outputs	
Utilisation category of safety contacts	
AC15 at	**230 V**
Max. current	**3 A**
Max. power	**690 W**
DC13 (6 cycles/min) at	**24 V**
Max. current	**3 A**
Max. power	**72 W**
Utilisation category in accordance with UL	
Pilot Duty; R300	**24 V DC**
Airgap creepage between	
Relay contacts	**3 mm**
Relay contacts and other circuits	**5,5 mm**
External contact fuse protection, safety contacts	
In accordance with the standard	**VDE 0660**
Blow-out fuse, quick	**10 A**
Blow-out fuse, slow	**6 A**
Switch-off delay	**22 ms**
Contact material	**AgCuNi + 0,2 µm Au**
Potential isolation	**yes**
Environmental data	
Ambient temperature	
In accordance with the standard	**EN 60068-2-14**
Temperature range	**0 - 60 °C**
Forced convection in control cabinet off	**55 °C**
Storage temperature	
In accordance with the standard	**EN 60068-2-1/-2**
Temperature range	**-25 - 70 °C**
Climatic suitability	
In accordance with the standard	**EN 60068-2-30, EN 60068-2-78**
Condensation during operation	**Not permitted**
Max. operating height above sea level	**2000 m**
EMC	**EN 61131-2**
Vibration	
In accordance with the standard	**EN 60068-2-6**
Frequency	**5 - 150 Hz**
Acceleration	**1g**
Shock stress	
In accordance with the standard	**EN 60068-2-27**
Acceleration	**15g**
Duration	**11 ms**

Input and output modules
PNOZ m EF 4DI4DORD

Environmental data	
Airgap creepage	
In accordance with the standard	**EN 61131-2**
Overvoltage category	**II**
Pollution degree	**2**
Protection type	
In accordance with the standard	**EN 60529**
Housing	**IP20**
Terminals	**IP20**
Mounting area (e.g. control cabinet)	**IP54**
Potential isolation	
Potential isolation between	**Relay output and system voltage**
Type of potential isolation	**Protective separation**
Rated insulation voltage	**250 V**
Rated surge voltage	**4000 V**
Mechanical data	
Mounting position	**horizontally on mounting rail**
Mechanical life	**10,000,000 cycles**
DIN rail	
Top hat rail	**35 x 7,5 EN 50022**
Recess width	**27 mm**
Max. cable length	
Max. cable length per input	**1 km**
Material	
Bottom	**PC**
Front	**PC**
Top	**PC**
Connection type	**Spring-loaded terminal, screw terminal**
Mounting type	**plug-in**
Conductor cross section with screw terminals	
1 core flexible	**0,25 - 2,5 mm², 24 - 12 AWG**
2 core with the same cross section, flexible without crimp connectors or with TWIN crimp connectors	**0,2 - 1,5 mm², 24 - 16 AWG**
Torque setting with screw terminals	**0,5 Nm**
Conductor cross section with spring-loaded terminals: Flexible with/without crimp connector	**0,2 - 2,5 mm², 24 - 12 AWG**
Spring-loaded terminals: Terminal points per connection	**2**
Stripping length with spring-loaded terminals	**9 mm**

Input and output modules
PNOZ m EF 4DI4DORD

Mechanical data	
Dimensions	
Height	**101,4 mm**
Width	**22,5 mm**
Depth	**120 mm**
Weight	**185 g**

Where standards are undated, the 2020-09 latest editions shall apply.

Safety characteristic data

Unit	Operating mode	EN ISO 13849-1: 2015 PL	EN ISO 13849-1: 2015 Category	EN 62061 SIL CL	EN 62061 PFH_D [1/h]	EN ISO 13849-1: 2015 T_M [year]
Logic						
CPU	**2-channel**	**PL e**	**Cat. 4**	**SIL CL 3**	**2,84E-10**	**20**
Input						
SC inputs	**1-channel**	**PL d**	**Cat. 2**	**SIL CL 2**	**2,10E-09**	**20**
SC inputs	**2-channel**	**PL e**	**Cat. 4**	**SIL CL 3**	**4,27E-11**	**20**
SC inputs	**Short circuit-forming safety mats**	**PL d**	**Cat. 3**	**SIL CL 2**	**1,80E-10**	**20**
SC inputs	**1-ch., pulsed light barrier**	**PL e**	**Cat. 4**	**SIL CL 3**	**2,10E-10**	**20**
Output						
Relay outputs	**1-channel**	**PL c**	**Cat. 1**	**-**	**4,41E-07**	**20**
Relay outputs	**2-channel**	**PL e**	**Cat. 4**	**SIL CL 3**	**9,58E-11**	**20**

All the units used within a safety function must be considered when calculating the safety characteristic data.

The PFH value depends on the switch frequency and the load of the relay output.
If the service life graphs are not accessible, the stated PFH value can be used irrespective of the switch frequency and the load, as the PFH value already considers the relay's B10d value as well as the failure rates of the other components.

Classification according to ZVEI, CB24I

The following tables describe the classes and specific values of the product interface and the classes of interfaces compatible with it. The classification is described in the ZVEI position paper "Classification of Binary 24 V Interfaces - Functional Safety aspects covered by dynamic testing".

Input and output modules
PNOZ m EF 4DI4DORD

Input	
Interfaces	
Drain	
Interface	**Module**
Class	**C2**
Source	
Interface	**Sensor**
Class	**C2, C3**
Drain parameters	
Max. test pulse duration	**500 µs**
Min. input resistance	**5,6 kOhm**
Max. capacitive load	**126 nF**

Relay outputs	
Interfaces	
Source	
Drain	
Source parameters	
Min. switching current	**10 mA**
Max. switching current	**6 A**

Input and output modules
PNOZ m EF 4DI4DORD

Supplementary data

Service life graph for the relay contacts

The service life graphs indicate the number of cycles from which failures due to wear must be expected. The wear is mainly caused by the electrical load; the mechanical load is negligible.

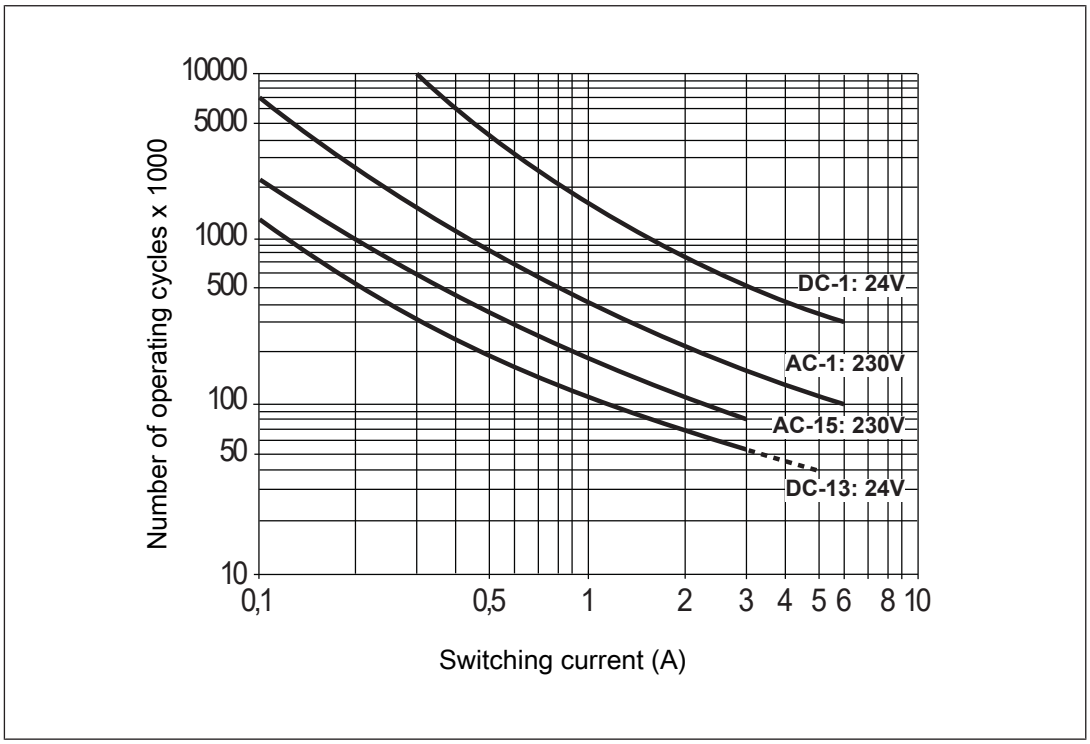

Fig.: Service life graphs at 24 VDC and 230 VAC

Input and output modules
PNOZ m EF 4DI4DORD

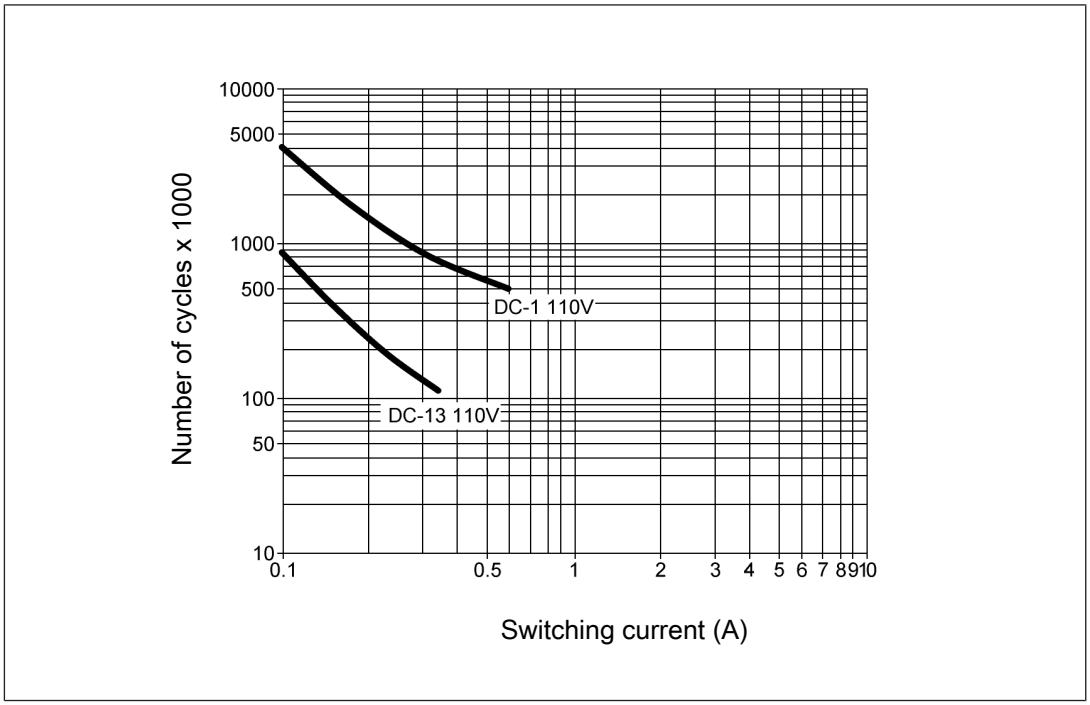

Fig.: Service life graphs at 110 VDC

Example

- Inductive load: 0.2 A
- Utilisation category: AC15
- Contact service life: 1 000 000 cycles

Provided the application to be implemented requires fewer than 1 000 000 cycles, the PFH value (see Technical details [📖 807]) can be used in the calculation.

To increase the service life, sufficient spark suppression must be provided on all relay contacts. With capacitive loads, any power surges that occur must be noted. With DC contactors, use flywheel diodes for spark suppression.

We recommend you use semiconductor outputs to switch 24 VDC loads.

Input and output modules
PNOZ m EF 4DI4DORD

Permitted ambient temperature Tamb dependent on the total current Isum

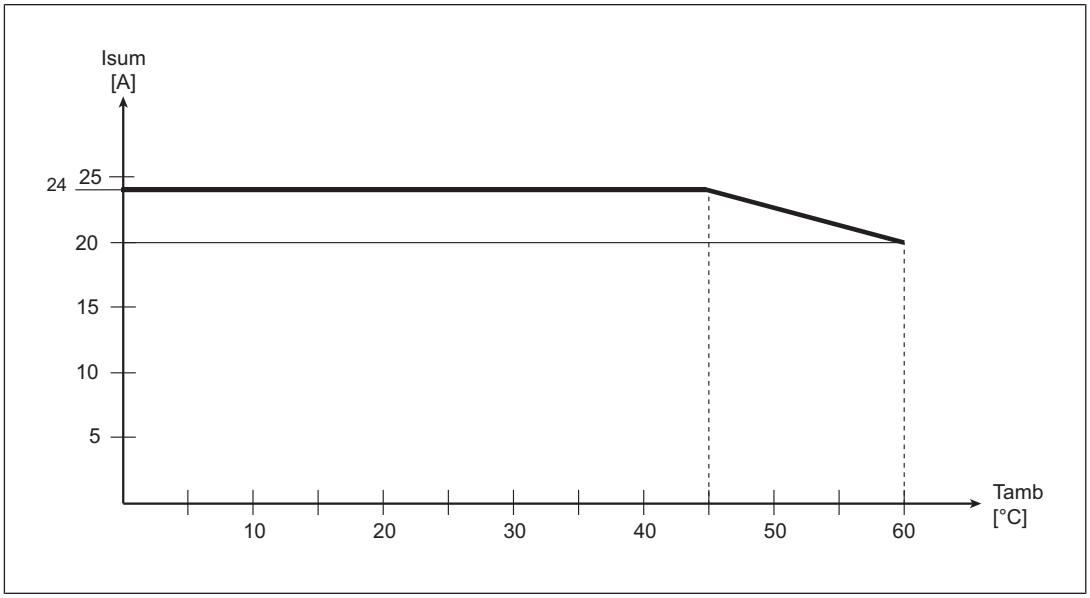

Max. permitted total current of relay outputs at an ambient temperature of < 45 °C: 24 A

Max. permitted total current of relay outputs at an ambient temperature of = 60 °C: 20 A

Order reference

Product

Product type	Features	Order no.
PNOZ m EF 4DI4DORD	Expansion module	772145

Accessories

Connection terminals

Product type	Features	Order No.
Set spring terminals	1 set of spring-loaded terminals	751 004
Set screw terminals	1 set of screw terminals	750 004

Terminator, jumper

Product type	Features	Order no.
PNOZ mm0.xp connector left	Jumper yellow/black to connect the modules, 10 pieces	779 260

Input and output modules
PNOZ m EF 8DI2DOT

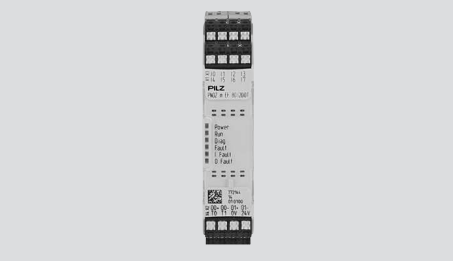

Overview

Unit features

Application of the product PNOZ m EF 8DI2DOT:

Expansion module for connection to a base unit from the PNOZmulti 2 system.

The product has the following features:

- Can be configured in the PNOZmulti Configurator
- Semiconductor outputs:
  - 2 dual-pole safety outputs
    Up to PL e of EN ISO 13849-1 and SIL CL 3 of EN IEC 62061, depending on the application.
    The outputs are suitable for controlling a press safety valve in accordance with EN 692.
  - Open circuit detection configurable
- 8 inputs
  - The inputs can be used to evaluate run monitoring for press applications.
  - Configurable pulse suppression at the inputs
- LED display for:
  - Error messages
  - Diagnostics
  - Switch state of the outputs
  - Switch state of the inputs
- Monitoring of shorts across contacts at the inputs by test pulses
  - from the base unit
  - from the expansion module
- Monitoring of shorts between the safety outputs
- Plug-in connection terminals:
  Either spring-loaded terminal or screw terminal available as an accessory (see Order references for accessories [📖 772]).

Input and output modules
PNOZ m EF 8DI2DOT

- Please refer to the document "PNOZmulti System Expansion" for details of the base units PNOZmulti 2 that can be connected.

Front view

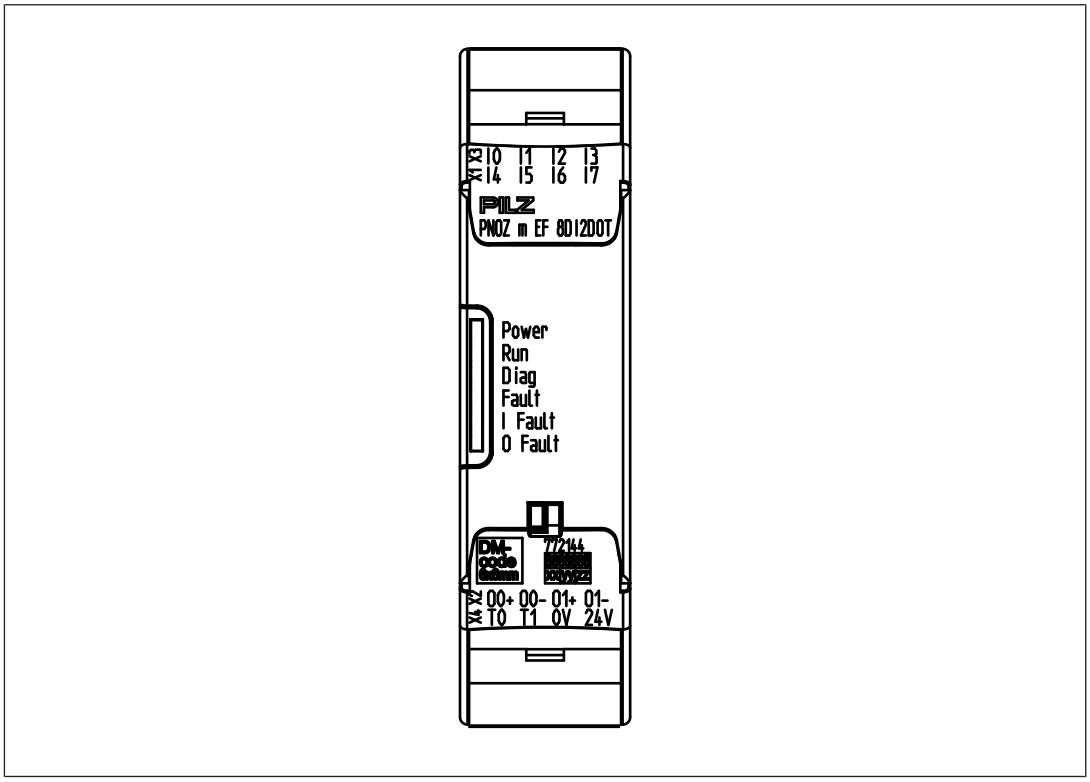

Legend

X1, X3:	Inputs I0 – I7
X2:	Dual-pole outputs O0+, O0- and O1+, O1-
X4:	Supply connections 0 V, 24 V
	Test pulse outputs T0, T1
LEDs	POWER, Run, Diag, Fault, I Fault, O Fault
	Terminal LEDs: Each terminal is assigned an LED.

Input and output modules
PNOZ m EF 8DI2DOT

Function description

Functions

The expansion module provides additional inputs and dual-pole semiconductor outputs.

The function of the inputs and outputs on the control system depends on the user program created using the PNOZmulti Configurator. The user program is downloaded from the PNOZmulti Configurator to the base unit. The base unit has 2 microcontrollers that monitor each other. They evaluate the input circuits on the base unit and expansion modules and switch the outputs on the base unit and expansion modules accordingly.

The online help on the PNOZmulti Configurator contains descriptions of the operating modes and all the functions of the PNOZmulti control system, plus connection examples.

Inputs

The expansion module provides 8 inputs.

Features

- Each input can be used to evaluate run monitoring for press applications.
- Each input can be configured for pulse detection for run monitoring.
  - The pulse width has to be a least 1 ms for reliable pulse detection.
  - When pulse detection is active, the functions pulse suppression and detection of shorts across contacts are deactivated via the test pulses.
- In PNOZmulti Configurator the pulse suppression time can be changed for the inputs. A change of the preset pulse suppression time (see Technical details [📖 823]) can be used to suppress the self-monitored outputs and for interference suppression.
- For detection of shorts across contacts of the inputs:
  - In the main program the inputs can be connected with the test pulses of the base unit.
  - In the module program the inputs can be connected to the test pulses of the expansion module.

2-pole outputs

The expansion module provides two dual-pole outputs.

Features:

- Signals at the output
  - "0" signal (0 V) at the output (O+/O-):

    Output is high impedance

    No current to the load
  - "1" signal (+24 V) at the output (O+/O-):

Output is low impedance

Current is supplied to the load

- The max. capacity at an output depends on the load (see drawing on the max. capacitive load). Connecting a higher capacity may lead to an error.
- Operation with electronic contactors has not been tested and may lead to errors. Please contact our Customer Support team if you are using electronic contactors.
- Open circuit detection
- Cannot be used as a single-pole output

Output tests

The following output tests are carried out:

- Asymmetric test in error-free operation
  - In this test, one output transistor is switched on and the other switched off for the test duration t1 as a maximum. The load is not switched on because of the test. If errors are detected during this test, then an advanced on test is run.
  - The test duration t1 is max. 5 ms.
  - The repetition time between the asymmetrical tests t2 is at least 30 s.
  - The time t3 between two asymmetrical tests O+ and O- is at least 1 s.
- Advanced on test in the event of an error
  - The advanced on test is always run directly after an asymmetric test, in which an error has occurred. It is used to determine the cause of the error.
  - The test is run for the test duration t1 as a maximum
  - The test duration t1 is max. 5 ms.
  - The test enables precise error diagnostics
  - The load must not switch on because of the test.
  - The following errors are detected:

    Shorts across contacts (external error),

    Short circuits and interruptions on the transistors,

    Short circuits and open circuit on the connected load

Input and output modules
PNOZ m EF 8DI2DOT

Function diagram of the asymmetric test

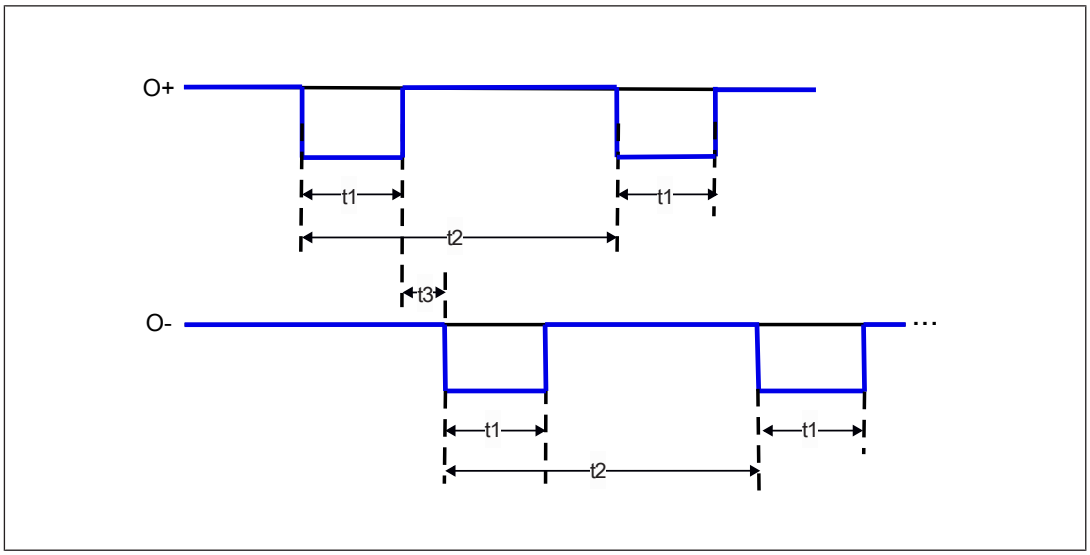

System reaction time

Calculation of the maximum reaction time between an input switching off and a linked output in the system switching off is described in the document "PNOZmulti System Expansion [30]".

Block diagram

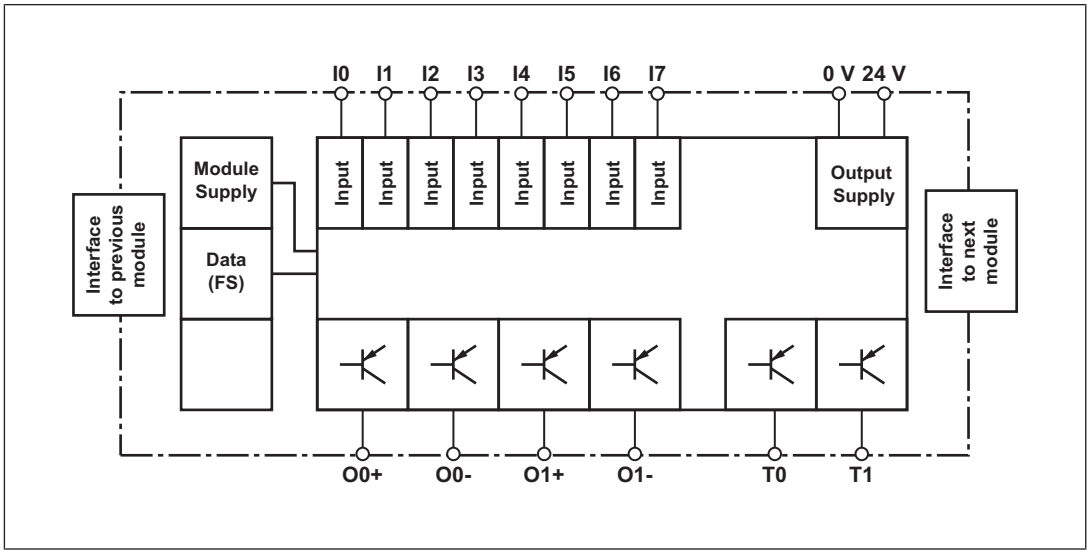

Input and output modules
PNOZ m EF 8DI2DOT

Installation

Dimensions in mm

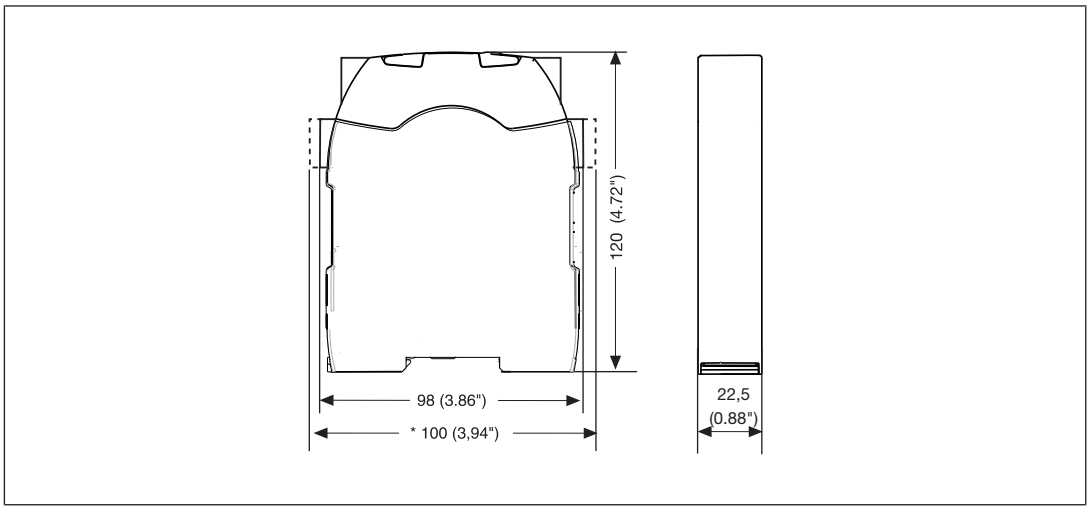

Commissioning

General wiring guidelines

The wiring is defined in the circuit diagram of the PNOZmulti Configurator.

Please note:

- Information given in the Technical details [📖 823] must be followed.
- The position of the expansion module is specified in the Hardware configuration of the PNOZmulti Configurator.
- Use copper wiring with a temperature stability of 75 °C.
- Protect the supply voltage as follows:
  - Circuit breaker, characteristic C - 6 A

    or
  - Blow-out fuse, slow, 6 A
- The unit has two dual-pole semiconductor outputs. These may be configured as single-pole or redundant outputs. The output assignment is defined in the PNOZmulti Configurator. Wire the outputs as described in the table.

Input and output modules
PNOZ m EF 8DI2DOT

Connection

Supply voltage

Supply voltage	DC
	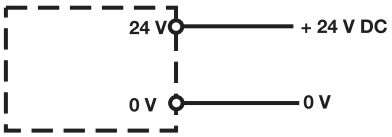

Connection examples for the input circuit

Input circuit	Single-channel	Dual-channel
Example: E-STOP without detection of shorts across contacts	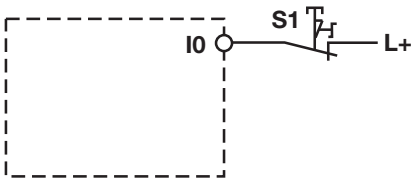	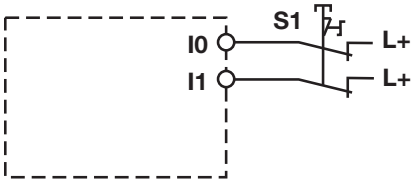
Example: E-STOP with detection of shorts across contacts	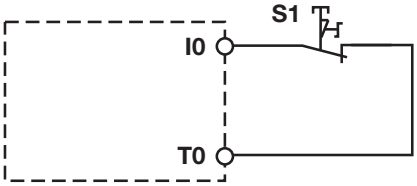	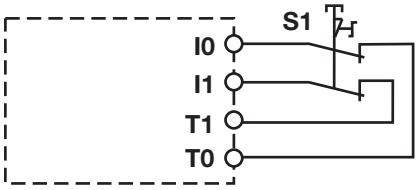

Input and output modules
PNOZ m EF 8DI2DOT

Connection examples for the output circuit

Redundant output	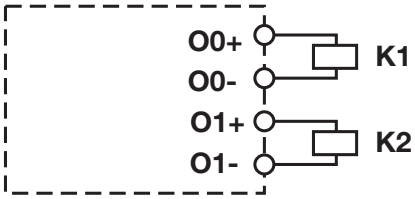	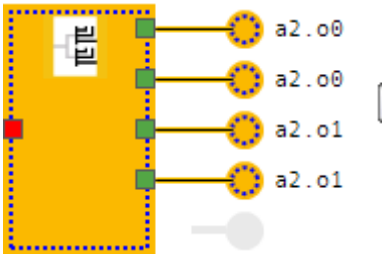
Single output	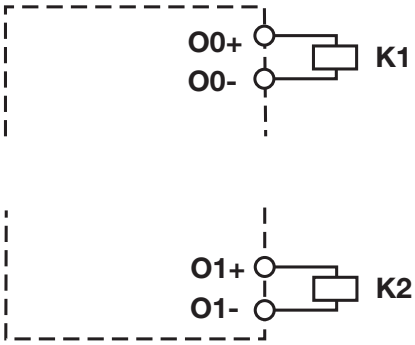	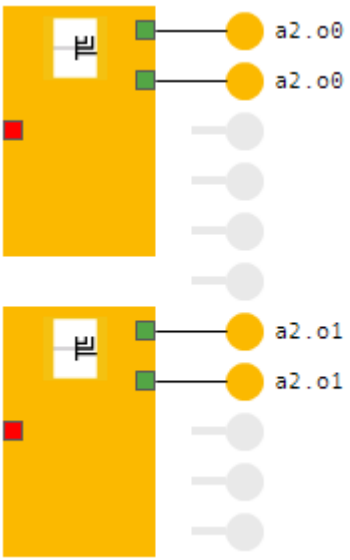

Feedback loop

Feedback loop	Redundant output
Contacts from external contactors	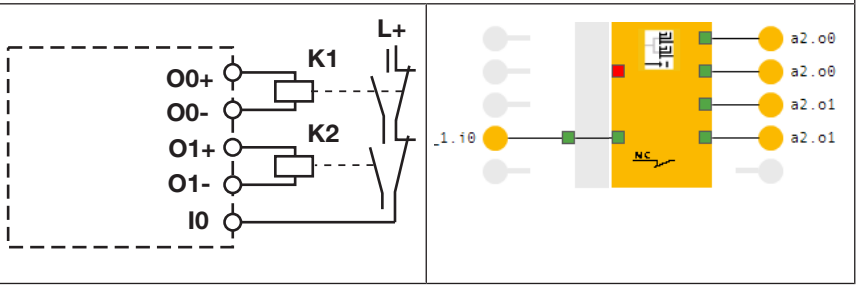

Input and output modules
PNOZ m EF 8DI2DOT

Technical details

General	
Certifications	**CE, EAC (Eurasian), KOSHA, TÜV, cULus Listed**
Application range	**Failsafe**
Module's device code	**00E5h**
Electrical data	
Supply voltage	
for	**Supply to the SC outputs**
Voltage	**24 V**
Kind	**DC**
Voltage tolerance	**-20 %/+25 %**
Max. continuous current that the external power supply must provide	**4 A**
Potential isolation	**yes**
Supply voltage	
for	**Module supply**
internal	**Via base unit**
Voltage	**24 V**
Kind	**DC**
Current consumption	**35 mA**
Power consumption	**0,8 W**
Max. power dissipation of module	**8 W**
Status indicator	**LED**
Inputs	
Number	**8**
Input voltage in accordance with EN 61131-2 Type 1	**24 V DC**
Input current at rated voltage	**5 mA**
Input current range	**2,5 - 5,3 mA**
Pulse suppression	**0,4 - 5 ms**
Input delay	**8 ms + pulse suppression**
Potential isolation	**No**
Semiconductor outputs, 2-pole	
Number of dual-pole semiconductor outputs	**2**
Permitted current range	**0,00 - 2,40 A**
Switching capability	
Voltage	**24 V DC**
Typ. output current at "1" signal and rated voltage of semiconductor output	**2 A**
Residual current at "0" signal	**0,5 mA**
Max. pulsed current for t < 100 ms	**12 A**

Input and output modules
PNOZ m EF 8DI2DOT

Semiconductor outputs, 2-pole	
Switch-off delay	**6 ms**
Short circuit-proof	**yes**
Max. duration of off time during self test	**5 ms**
Test pulse outputs	
Number of test pulse outputs	**2**
Voltage	**24 V**
Current	**0,05 A**
Max. duration of off time during self test	**1,4 ms**
Short circuit-proof	**yes**
Potential isolation	**No**
Environmental data	
Ambient temperature	
In accordance with the standard	**EN 60068-2-14**
Temperature range	**0 - 60 °C**
Forced convection in control cabinet off	**55 °C**
Storage temperature	
In accordance with the standard	**EN 60068-2-1/-2**
Temperature range	**-25 - 70 °C**
Climatic suitability	
In accordance with the standard	**EN 60068-2-30, EN 60068-2-78**
Condensation during operation	**Not permitted**
Max. operating height above sea level	**2000 m**
EMC	**EN 61131-2**
Vibration	
In accordance with the standard	**EN 60068-2-6**
Frequency	**10 - 55 Hz**
Acceleration	**1g**
Shock stress	
In accordance with the standard	**EN 60068-2-27**
Acceleration	**15g**
Duration	**11 ms**
Airgap creepage	
In accordance with the standard	**EN 61131-2**
Overvoltage category	**II**
Pollution degree	**2**
Protection type	
In accordance with the standard	**EN 60529**
Housing	**IP20**
Terminals	**IP20**
Mounting area (e.g. control cabinet)	**IP54**

Input and output modules
PNOZ m EF 8DI2DOT

Potential isolation	
Potential isolation between	**2-pole semiconductor outputs and system voltage**
Type of potential isolation	**Basic insulation**
Rated surge voltage	**2500 V**
Mechanical data	
Mounting position	**horizontally on mounting rail**
DIN rail	
Top hat rail	**35 x 7,5 EN 50022**
Recess width	**27 mm**
Max. cable length	
Max. cable length per input	**1 km**
Sum of individual cable lengths at the test pulse output	**1 km**
Material	
Bottom	**PC**
Front	**PC**
Top	**PC**
Connection type	**Spring-loaded terminal, screw terminal**
Mounting type	**plug-in**
Conductor cross section with screw terminals	
1 core flexible	**0,25 - 2,5 mm², 24 - 12 AWG**
2 core with the same cross section, flexible without crimp connectors or with TWIN crimp connectors	**0,2 - 2,5 mm², 24 - 16 AWG**
Torque setting with screw terminals	**0,5 Nm**
Conductor cross section with spring-loaded terminals: Flexible with/without crimp connector	**0,2 - 2,5 mm², 24 - 12 AWG**
Spring-loaded terminals: Terminal points per connection	**2**
Stripping length with spring-loaded terminals	**9 mm**
Dimensions	
Height	**101,4 mm**
Width	**22,5 mm**
Depth	**120 mm**
Weight	**105 g**

Where standards are undated, the 2017-09 latest editions shall apply.

Input and output modules
PNOZ m EF 8DI2DOT

Safety characteristic data

Unit	Operating mode	EN ISO 13849-1: 2015 PL	EN ISO 13849-1: 2015 Category	EN 62061 SIL CL	EN 62061 PFH_D [1/h]	EN ISO 13849-1: 2015 T_M [year]
Logic						
CPU	**2-channel**	**PL e**	**Cat. 4**	**SIL CL 3**	**2,84E-10**	**20**
Input						
SC inputs	**1-channel**	**PL d**	**Cat. 2**	**SIL CL 2**	**2,10E-09**	**20**
SC inputs	**2-channel**	**PL e**	**Cat. 4**	**SIL CL 3**	**4,27E-11**	**20**
SC inputs	**Short circuit-forming safety mats**	**PL d**	**Cat. 3**	**SIL CL 2**	**1,80E-10**	**20**
SC inputs	**1-ch., pulsed light barrier**	**PL e**	**Cat. 4**	**SIL CL 3**	**2,10E-10**	**20**
Output						
SC outputs (2-pole)	**2-channel**	**PL e**	**Cat. 4**	**SIL CL 3**	**2,82E-10**	**20**

Explanatory notes for the safety-related characteristic data:

- The SIL CL value in accordance with EN 62061 corresponds to the SIL value in accordance with EN 61508.
- T_M is the maximum mission time in accordance with EN ISO 13849-1. The value also applies as the retest interval in accordance with EN 61508-6 and IEC 61511 and as the proof test interval and mission time in accordance with EN 62061.

All the units used within a safety function must be considered when calculating the safety characteristic data.

Input and output modules
PNOZ m EF 8DI2DOT

Supplementary data

Maximum capacitive load C (µF) with load current I (A) at the semiconductor outputs

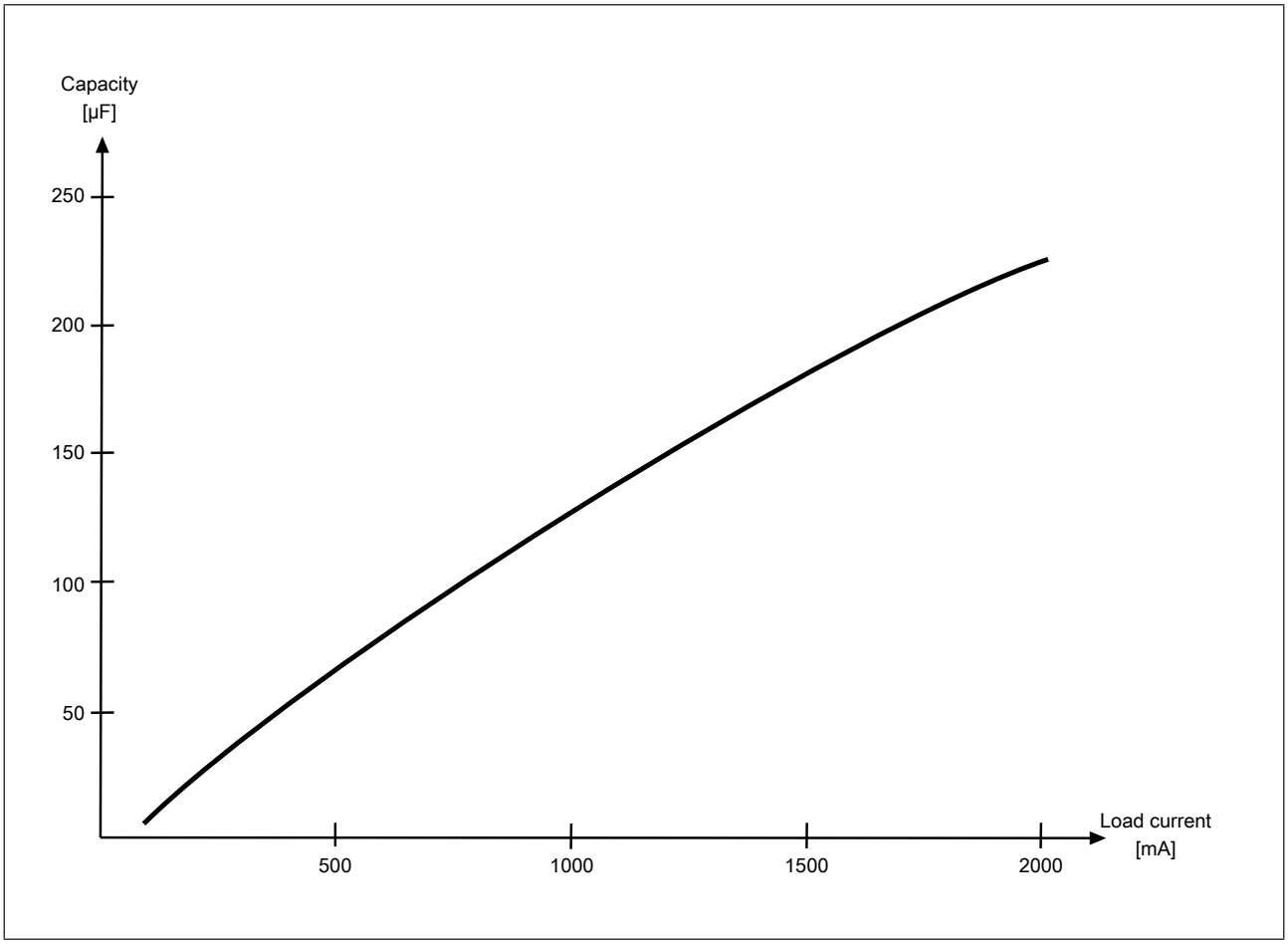

Input and output modules
PNOZ m EF 8DI2DOT

Order reference

Product

Product type	Features	Order no.
PNOZ m EF 8DI4DOT	Expansion module, 8 inputs, 2 dual-pole outputs	772 144

Accessories

Connection terminals

Product type	Features	Order No.
Set spring terminals	1 set of spring-loaded terminals	751 004
Set screw terminals	1 set of screw terminals	750 004

Terminator, jumper

Product type	Features	Order no.
PNOZ mm0.xp connector left	Jumper yellow/black to connect the modules, 10 pieces	779 260

Output modules
PNOZ m ES 14DO

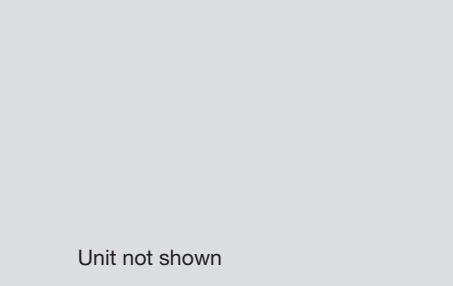

Overview

Unit features

Application of the product PNOZ m ES 14DO:

Expansion module for connection to a base unit from the PNOZmulti 2 system.

The product has the following features:

- Can be configured in the PNOZmulti Configurator
- 14 semiconductor outputs for standard applications
- LED display for:
  - Error messages
  - Diagnostics
  - Supply voltage
  - Output circuits
- Plug-in connection terminals:
  Either spring-loaded terminal or screw terminal available as an accessory (see Order references for accessories [📖 772]).
- Please refer to the document "PNOZmulti System Expansion" for details of the base units PNOZmulti 2 that can be connected.

Output modules
PNOZ m ES 14DO

Front view

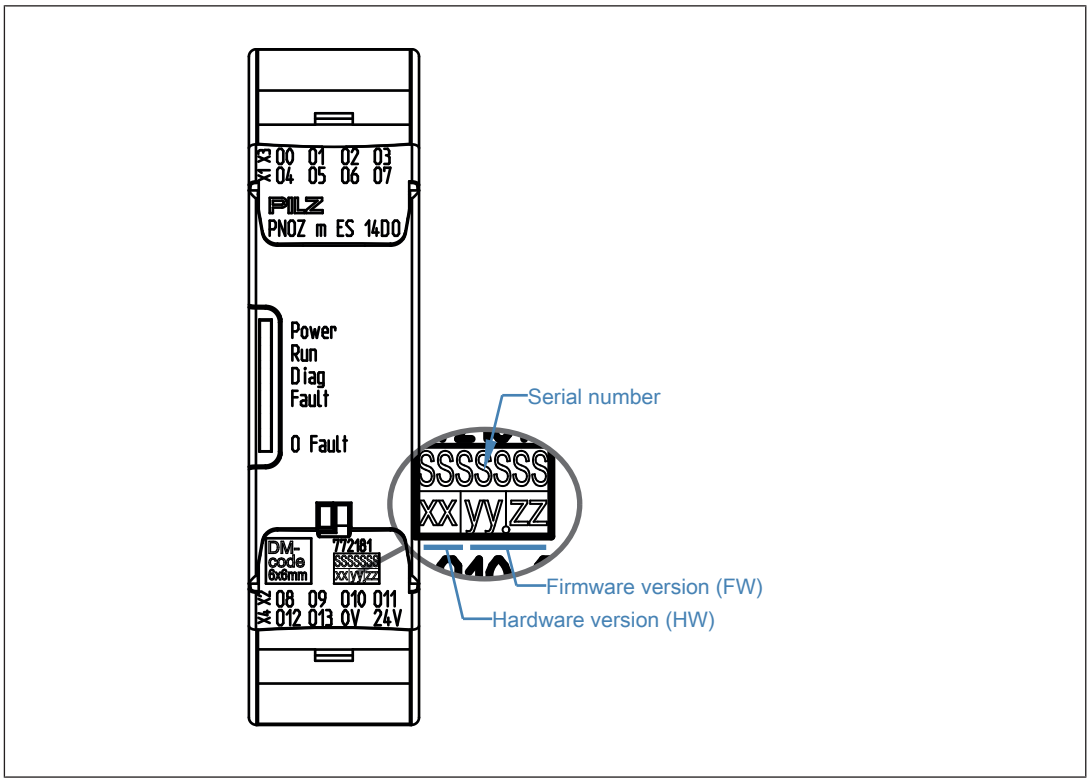

Legend:

- 0 V, 24 V: Supply connections
- Outputs O0 – O13
- LEDs:
  - POWER
  - Run
  - Diag
  - Fault
  - O Fault

Output modules
PNOZ m ES 14DO

Function description

Functions

The expansion module provides additional semiconductor outputs for standard applications.

The function of the outputs depends on the user program created using the PNOZmulti Configurator. The online help on the PNOZmulti Configurator contains descriptions of the operating modes and all the functions of the PNOZmulti system, plus connection examples.

To be able to switch higher loads, you can switch several outputs in parallel.
There are two groups:
Any of the outputs O0 to O7 can be connected in parallel, and any of the outputs O8 to O13 can be connected in parallel.

System reaction time

Calculation of the maximum reaction time between an input switching off and a linked output in the system switching off is described in the document "PNOZmulti System Expansion [30]".

Block diagram

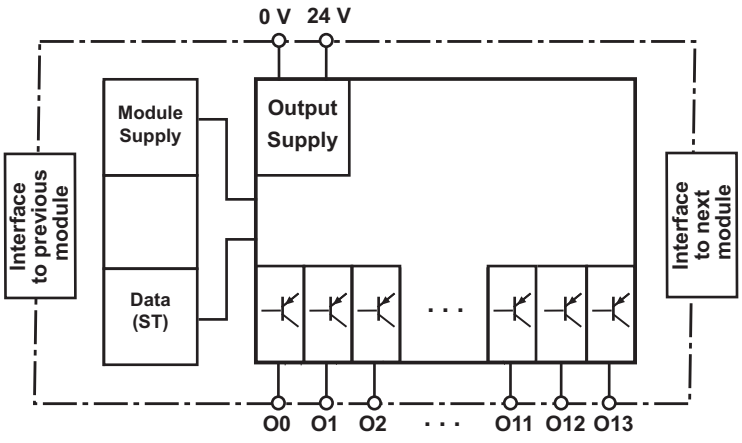

Output modules
PNOZ m ES 14DO

Installation

Dimensions in mm

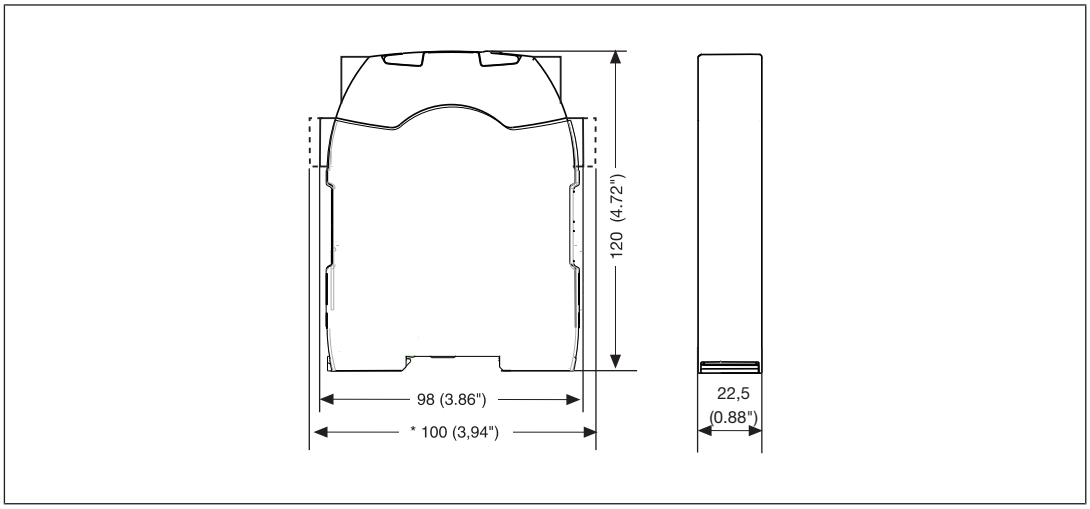

Commissioning

General wiring guidelines

The wiring is defined in the circuit diagram of the PNOZmulti Configurator.

Please note:

- Information given in the Technical details [📖 834] must be followed.
- The position of the expansion module is specified in the Hardware configuration of the PNOZmulti Configurator.
- Use copper wiring with a temperature stability of 75 °C.
- The supply voltage of the semiconductor outputs and the supply voltage of the system are galvanically isolated from each other.
- Protect the supply voltage as follows:
  - Circuit breaker, characteristic C - 10 A

    or
  - Blow-out fuse, slow, 10 A

Output modules
PNOZ m ES 14DO

Connection

Supply voltage	DC
	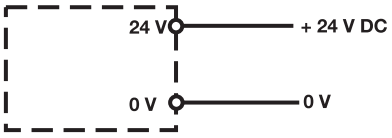

Connection example		
Single output	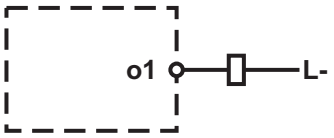	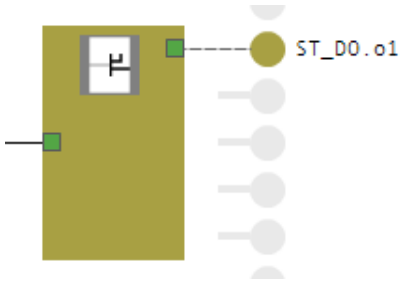
Two outputs parallel	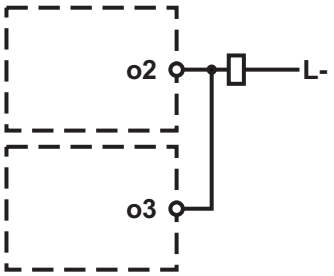	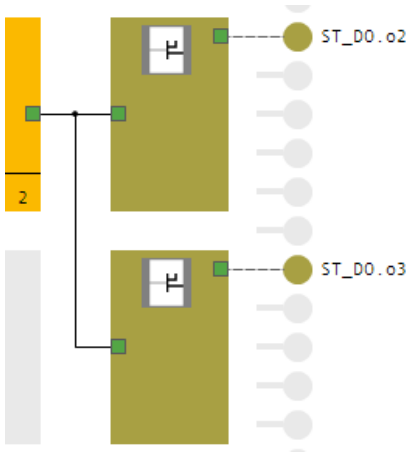

Output modules
PNOZ m ES 14DO

Technical details

General	
Certifications	**CE, UL Listed**
Application range	**Standard**
Module's device code	**00F8h**
Electrical data	
Supply voltage	
for	**Supply to the SC outputs**
Voltage	**24 V**
Kind	**DC**
Voltage tolerance	**-20 %/+25 %**
Max. continuous current that the external power supply must provide	**8,5 A**
Potential isolation	**yes**
Supply voltage	
for	**Module supply**
internal	**Via base unit**
Voltage	**24 V**
Kind	**DC**
Current consumption	**20 mA**
Power consumption	**0,5 W**
Max. power dissipation of module	**2,5 W**
Status indicator	**LED**
Permitted loads	**inductive, capacitive, resistive**
Semiconductor outputs	
Number of positive-switching single-pole semiconductor outputs	**14**
Switching capability	
Voltage	**24 V**
Typ. output current at "1" signal and rated voltage of semiconductor output	**0,5 A**
Permitted current range	**0,000 - 0,600 A**
Residual current at "0" signal	**0,5 mA**
Max. transient pulsed current	**1,4 A**
Max. internal voltage drop	**500 mV**
Switch-off delay	**1 ms**
Potential isolation	**yes**
Short circuit-proof	**yes**
Utilisation category in accordance with UL	
Voltage	**24 V DC P. D.**
Current	**0,5 A**

Output modules
PNOZ m ES 14DO

Environmental data	
Ambient temperature	
In accordance with the standard	**EN 60068-2-14**
Temperature range	**0 - 60 °C**
Forced convection in control cabinet off	**55 °C**
Storage temperature	
In accordance with the standard	**EN 60068-2-1/-2**
Temperature range	**-25 - 70 °C**
Climatic suitability	
In accordance with the standard	**EN 60068-2-30, EN 60068-2-78**
Condensation during operation	**Not permitted**
Max. operating height above sea level	**2000 m**
EMC	**EN 61131-2**
Vibration	
In accordance with the standard	**EN 60068-2-6**
Frequency	**5 - 150 Hz**
Amplitude	**0,35 mm**
Acceleration	**1g**
Shock stress	
In accordance with the standard	**EN 60068-2-27**
Acceleration	**15g**
Duration	**11 ms**
Airgap creepage	
In accordance with the standard	**EN 61131-2**
Overvoltage category	**II**
Pollution degree	**2**
Rated insulation voltage	**30 V**
Protection type	
In accordance with the standard	**EN 60529**
Housing	**IP20**
Terminals	**IP20**
Mounting area (e.g. control cabinet)	**IP54**
Potential isolation	
Potential isolation between	**SC output and system voltage**
Type of potential isolation	**Basic insulation**
Rated surge voltage	**2500 V**
Mechanical data	
Mounting position	**horizontally on mounting rail**
DIN rail	
Top hat rail	**35 x 7,5 EN 50022**
Recess width	**27 mm**

Output modules
PNOZ m ES 14DO

Mechanical data	
Material	
Bottom	**PC**
Front	**PC**
Top	**PC**
Connection type	**Spring-loaded terminal, screw terminal**
Mounting type	**plug-in**
Conductor cross section with screw terminals	
1 core flexible	**0,25 - 2,5 mm², 24 - 12 AWG**
2 core with the same cross section, flexible without crimp connectors or with TWIN crimp connectors	**0,2 - 1,5 mm², 24 - 16 AWG**
Torque setting with screw terminals	**0,5 Nm**
Conductor cross section with spring-loaded terminals: Flexible with/without crimp connector	**0,2 - 2,5 mm², 24 - 12 AWG**
Spring-loaded terminals: Terminal points per connection	**2**
Stripping length with spring-loaded terminals	**9 mm**
Dimensions	
Height	**101,4 mm**
Width	**22,5 mm**
Depth	**120 mm**
Weight	**100 g**

Where standards are undated, the 2016-05 latest editions shall apply.

Order reference

Product

Product type	Features	Order no.
PNOZ m ES 14DO	Expansion module	772 181

Accessories

Connection terminals

Product type	Features	Order No.
Set spring terminals	1 set of spring-loaded terminals	751 004
Set screw terminals	1 set of screw terminals	750 004

Output modules
PNOZ m ES 14DO

Terminator, jumper

Product type	Features	Order no.
PNOZ mm0.xp connector left	Jumper yellow/black to connect the modules, 10 pieces	779 260

Motion monitoring modules
PNOZ m EF 1MM



Overview

Unit features

Application of the product PNOZ m EF 1MM:

Expansion module for connection to a base unit from the PNOZmulti 2 system.

The product has the following features:

- Can be configured in the PNOZmulti Configurator
- Monitoring of 1 axis
- Measured value recorded by proximity switch and encoder
- Monitoring functions
  - Safe speed monitoring (SSM)
  - Safe speed range monitoring (SSR-M)
  - Safe direction of movement monitoring (SDI-M)
  - Safe operating stop monitoring (SOS-M)
  - Safe stop 1 monitoring (SS1-M)
  - Safe stop 2 monitoring (SS2-M)
  - Safely limited acceleration monitoring (SLA-M)
  - Safely limited acceleration range monitoring (SAR-M)
  - Analogue voltage (track S)
- LED display for:
  - Supply voltage
  - Diagnostics
  - Axis status
  - Fault
- Please refer to the document "PNOZmulti System Expansion" for details of the base units PNOZmulti 2 that can be connected.

Motion monitoring modules
PNOZ m EF 1MM

- Plug-in connection terminals:
  Either spring-loaded terminal or screw terminal available as an accessory (see Order references for accessories [📖 772]).

Front view

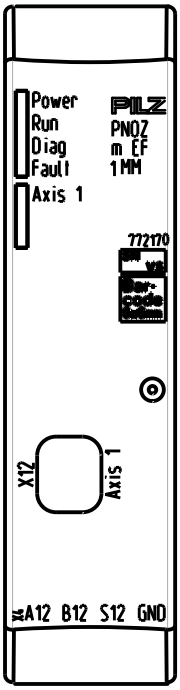

Legend:

- X4: Connection for proximity switch at axis 1
- X12: Mini IO socket for connecting encoder or proximity switch at axis 1.
- LEDs:
  - Power
  - Run
  - Diag
  - Fault
  - Axis 1

Motion monitoring modules
PNOZ m EF 1MM

Function description

Operation

The motion monitoring module PNOZ m EF 1MM can monitor one axis. The motion monitoring module signals the status of the monitored values to the base unit. Depending on the implemented safety circuit, the values may be transferred from the base unit to an output on the control system. Proximity switches or encoders are used to record the values.

The configuration of the motion monitoring module is described in detail in the PNOZmulti Configurator's online help.

The relay meets the following safety requirements:

- The circuit is redundant with built-in self-monitoring.
- The safety device remains effective in the case of a component failure.

Block diagram

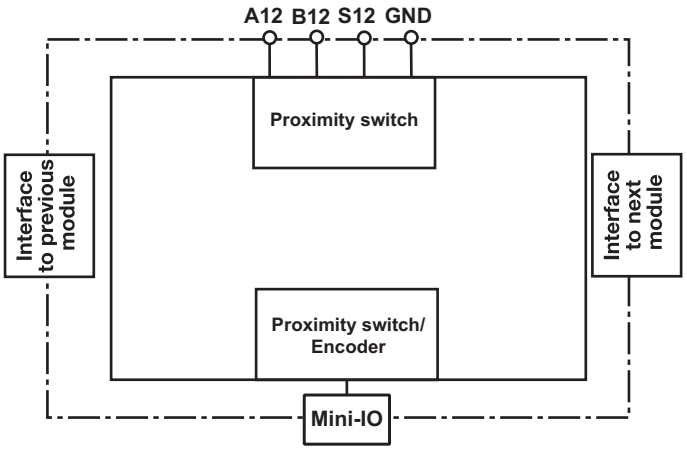

Monitoring functions

The motion monitoring module PNOZ m EF 1MM supports the following monitoring functions.

Please note that the position monitoring functions SOS-M, SDI-M and SS2-M cannot be used in conjunction with 2 proximity switches, as no position can be detected.

Safe speed monitoring

The ***Safe speed monitoring*** function (SSM) monitors the current speed to see if a limit value is exceeded.

Motion monitoring modules
PNOZ m EF 1MM

If the configured limit value is exceeded, the output switches off. As soon as the value falls below the limit value (plus hysteresis), the output switches off again.
If a manual reset is configured, the output will not switch back on until the value is inside the limit value (plus hysteresis) and the reset input is activated.

In PNOZmulti Configurator 12 areas can be configured per axis (with units < Version 2.0 only 8 limit values can be configured).

A tolerance range may also be set for the limit values used to monitor the speed. This tolerance range modifies the set limit values. As a result, one-off or periodic overshoots that exceed the limit values can be tolerated.
The following values can be configured for the tolerance range:

- Tolerance time (t1), which takes into account the length of the overshoots (maximum time for which the limit value may be exceeded). It must not be possible that the sum of all the overshoots exceeds the tolerance time (t1) within a tolerance period (t2).
- Tolerance period (t2), which takes into account the oscillation period (minimum time that must elapse between one limit value overshoot and the next)
- Tolerance amount (%), which takes into account the amplitude of the overshoots (maximum permitted percentage by which the configured limit values may be exceeded)

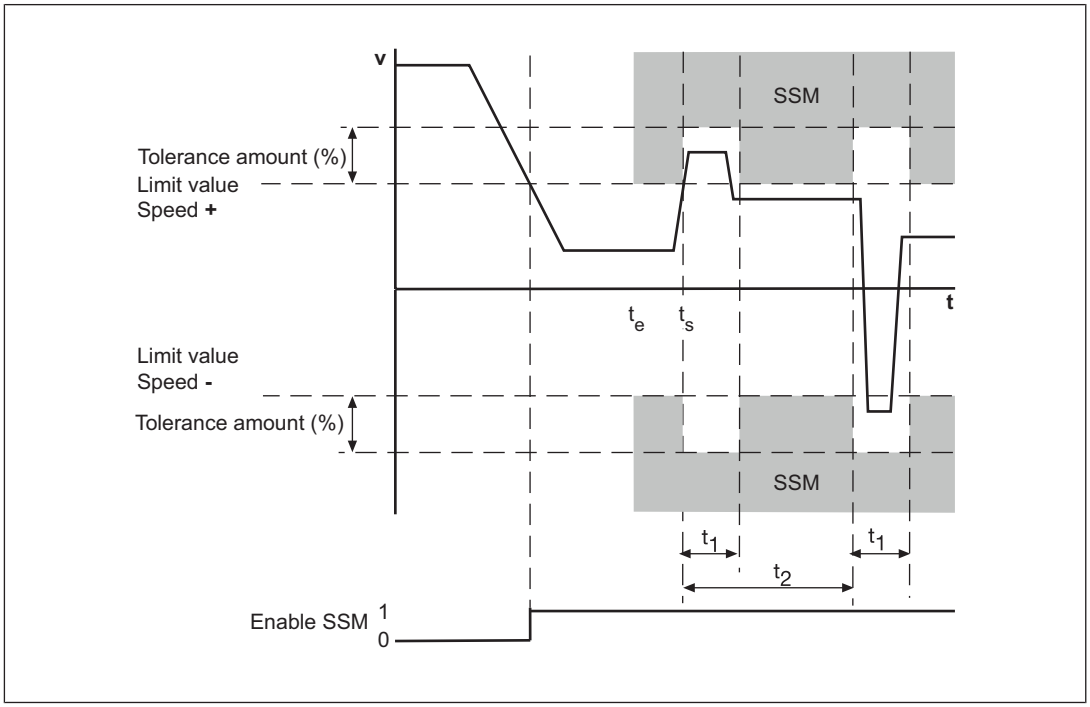

Legend:

- Enable SSM:
  - "1": Monitored limit value not exceeded
  - "0": Monitored limit value exceeded

- t_s: Speed v exceeds the limit value and activates the tolerance range (tolerance time, tolerance period, tolerance amount)
- t_1: Tolerance time
- t_2: Tolerance period
- Tolerance amount (%): Tolerance amount of limit value in both directions

Safe speed range monitoring

The ***Safe speed range monitoring*** function (SSR-M) monitors the current speed to ensure it stays within a maximum and minimum permitted limit value.

If the speed is outside the configured range, the output switches off. As soon as the speed returns within the configured range (plus hysteresis), the output switches back on.
If manual reset is configured, the output will not switch back on until the value is below the limit value (plus hysteresis) and the reset input is activated.

In PNOZmulti Configurator 2 areas can be configured per axis (with units < Version 2.0 only 1 area can be configured).

A tolerance range may also be set for the limit values used to monitor the speed range. This tolerance range modifies the set limit values. As a result, one-off or periodic overshoots that exceed the range limits can be tolerated.

The following values can be configured for the tolerance range:

- Tolerance time (t1), which takes into account the length of the overshoots (maximum time for which the limit value may be exceeded). It must not be possible that the sum of all the overshoots exceeds the tolerance time (t1) within a tolerance period (t2).
- Tolerance period (t2), which takes into account the oscillation period (minimum time that must elapse between one limit value overshoot and the next)
- Tolerance amount as a %, which takes into account the amplitude of the overshoots (maximum permitted percentage by which the limit value may be exceeded)

Motion monitoring modules
PNOZ m EF 1MM

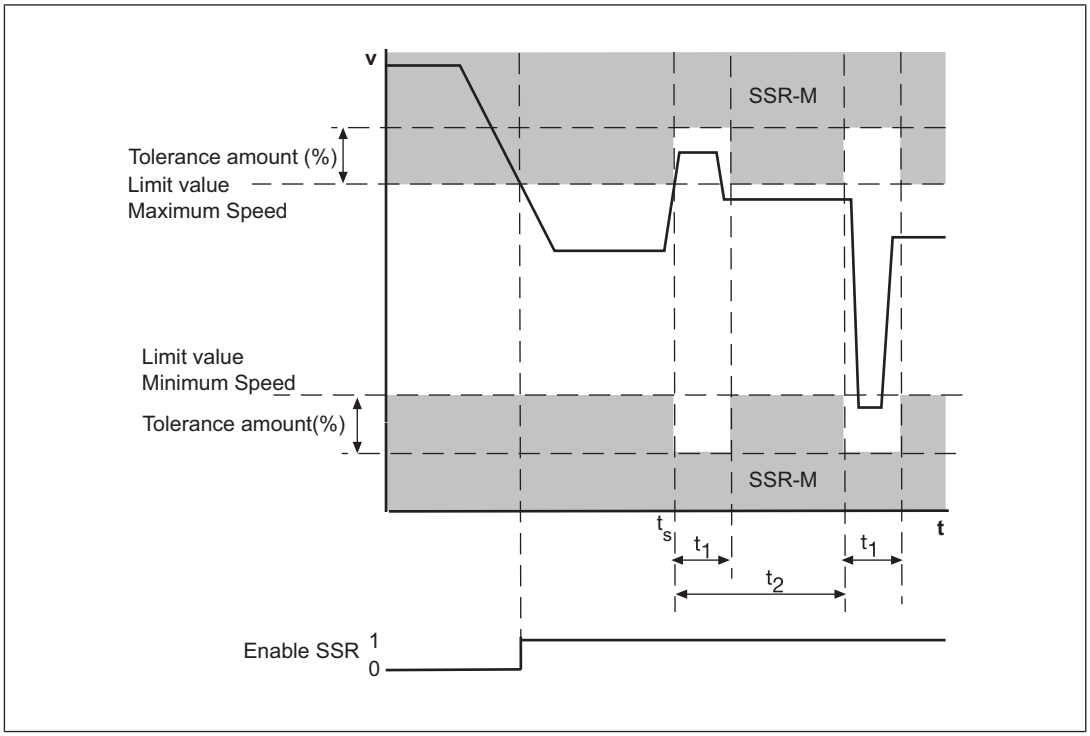

Legend:

- Enable SSR:
  - "1": Speed is within the configured range
  - "0": Speed is outside the configured range
- t_s: Speed v exceeds the limit value and activates the tolerance range (tolerance time, tolerance period, tolerance amount)
- t_1: Tolerance time
- t_2: Tolerance period
- Tolerance amount (%): Tolerance amount of the two limit values, maximum and minimum speed

Safe direction monitoring

The ***Safe direction monitoring*** function (SDI-M) monitors the direction of movement defined for the drive axis (positive or negative). Safe direction of movement monitoring is activated via the start input. It remains active until the configured tolerance is exceeded in the opposite direction. The function can be retriggered at any time by a rising edge at the start input. As a result, the current position can be used at any time as the start point for the monitoring function.

One SDI-M element can be configured per axis for each direction in the PNOZmulti Configurator.

Motion monitoring modules
PNOZ m EF 1MM

Please note:
This monitoring function cannot be used in conjunction with 2 proximity switches because position detection is not possible.

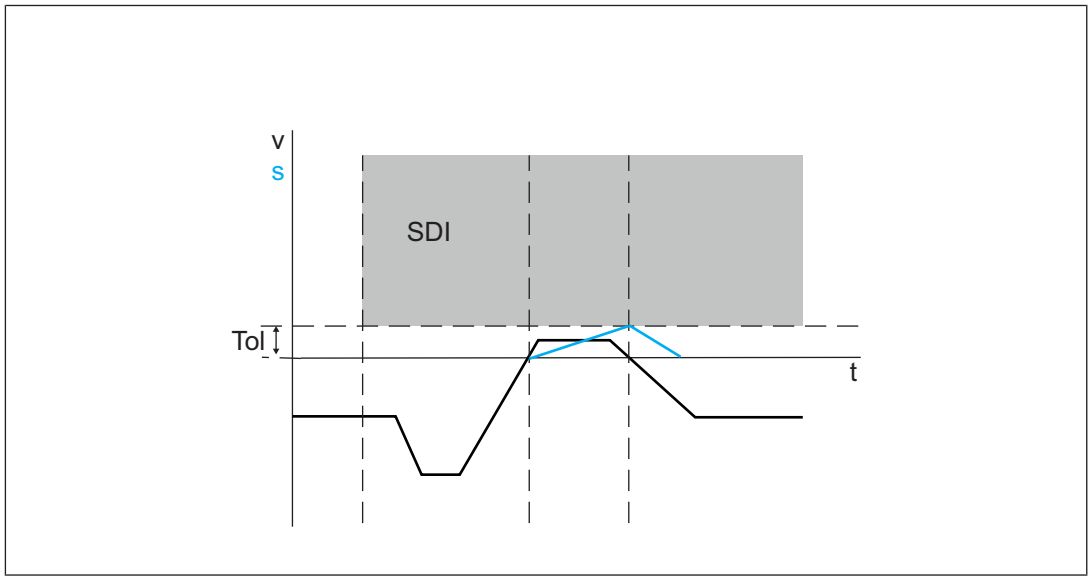

Safe operating stop monitoring

The ***Safe operating stop monitoring*** function (SOS-M) monitors whether the stop position remains within a configured tolerance window. Safe operating stop monitoring is activated within a rising edge at the start input. It remains active until the value is outside the tolerance band. The function can be retriggered at any time by a rising edge at the start input. As a result, the current position can be used at any time as the start point for the monitoring function.

In PNOZmulti Configurator 3 elements SOS-M can be configured per axis (with units < Version 2.0 only 1 element can be configured).

Please note:
This monitoring function cannot be used in conjunction with 2 proximity switches because position detection is not possible.

Motion monitoring modules
PNOZ m EF 1MM

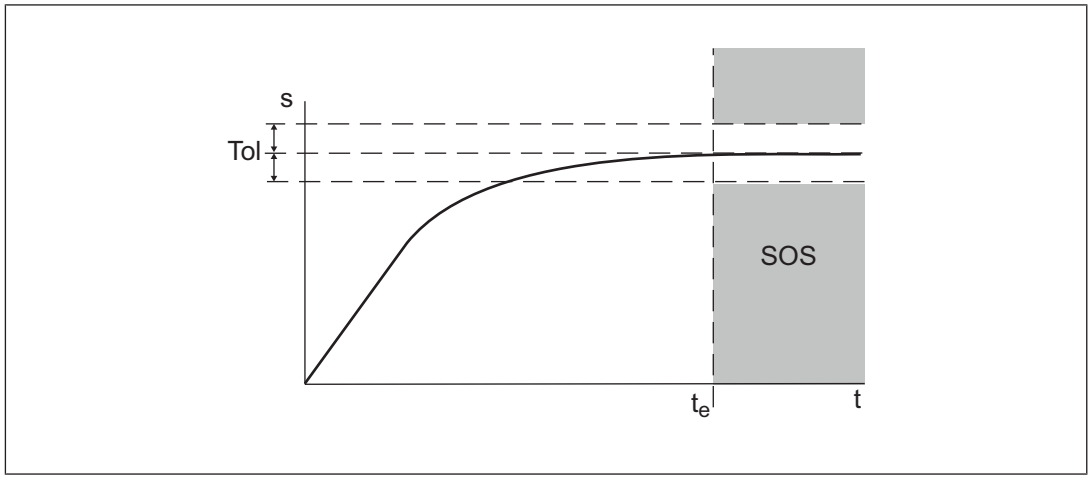

Legend:

- t_e: Activation of the monitoring function SOS

Safe stop 1 monitoring

The ***Safe stop 1 monitoring*** function (SS1-M) monitors whether the set delay time has elapsed (until controlled braking of the motor) or the standstill limit value for automatic STO is below the limit value.

- If the monitoring function SS1-M is triggered, the ***Braking ramp*** output is switched off. The drive controller's braking ramp is activated.
- After the set delay time has elapsed or the value for the automatic STO is below the limit value, the output ***ST*** switches off. The safety function ***Safe torque off*** (STO) is activated.

A maximum of 1 SS1-M element can be configured per axis in the PNOZmulti Configurator.

Sequence without standstill limit value for automatic STO:

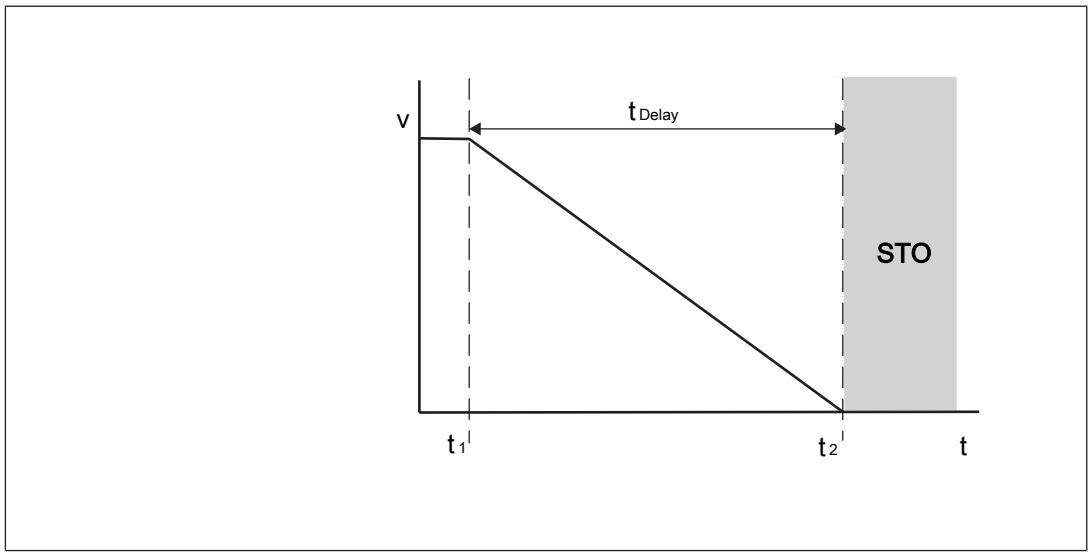

Motion monitoring modules
PNOZ m EF 1MM

Legend

t_1:	Monitoring function SS1-M is activated
t_2:	Delay time elapses, safety function "Safe torque off" (STO) is activated
t_{Delay}:	Set delay time for controlled braking of motor

Sequence with standstill limit value for automatic STO:

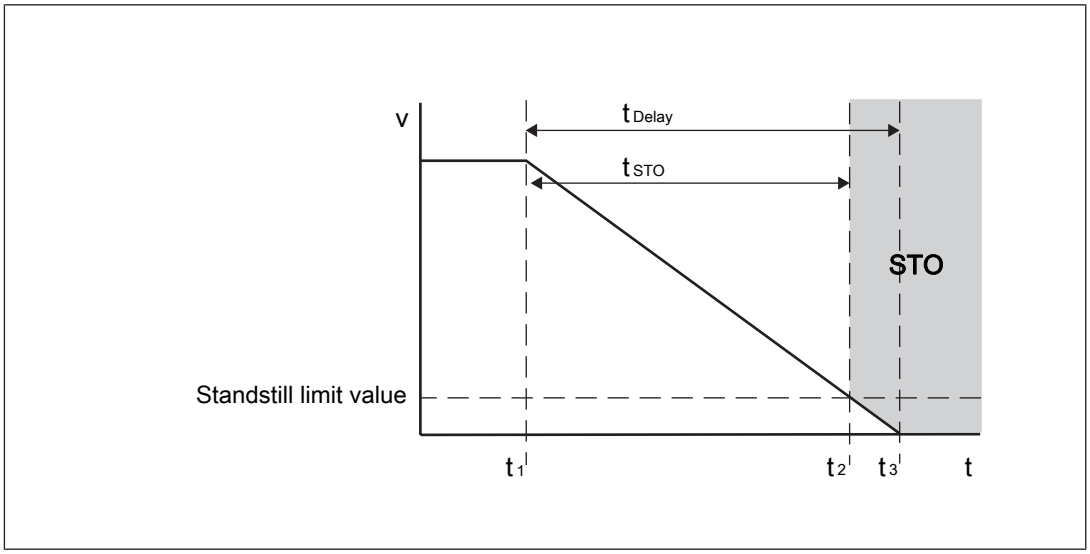

Legend

t_1:	Monitoring function SS1-M is activated
t_2:	Standstill limit value for automatic STO reached, safety function "Safe torque off" (STO) is activated
t_3:	Delay time elapses
t_{Delay}:	Set delay time for controlled braking of motor
t_{STO}:	Actual time from activation of monitoring function until STO is activated

Safe stop 2 monitoring

The ***Safe stop 2 monitoring*** function (SS2-M) monitors

- Whether the set delay time has expired (until controlled braking of the motor) or the standstill limit value for automatic SOS is below the limit value.

  and

- Whether the stop position ultimately remains within a configured tolerance window.

Reaction:

- If the monitoring function SS2-M is triggered, the "Braking ramp" output switches off. The drive controller's braking ramp is activated.
- If the set delay time has elapsed or the value for the automatic SOS is below the limit value, the stop position is monitored, the ***Position monitoring*** output switches on. If the stop position is outside the tolerance window, the ***Position monitoring*** and ***STO*** outputs switch off, the safety function ***Safe torque off*** (STO) is activated.

Motion monitoring modules
PNOZ m EF 1MM

A maximum of 1 SS2-M element can be configured per axis in the PNOZmulti Configurator.

Please note:
This monitoring function cannot be used in conjunction with 2 proximity switches because position detection is not possible.

Sequence without standstill limit value for automatic SOS:

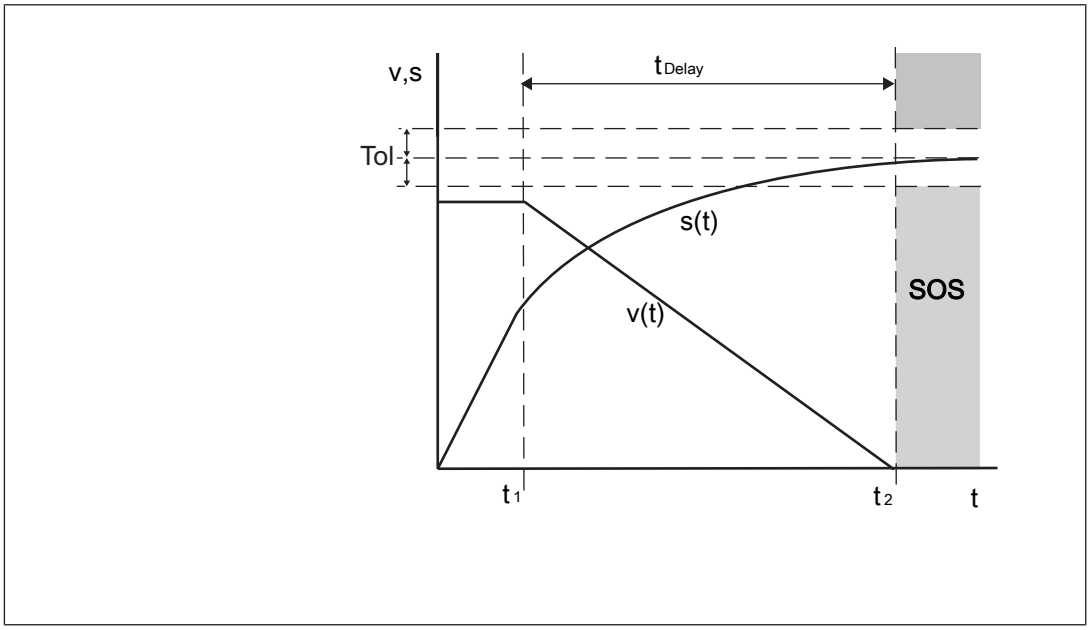

Legend

t_1:	Activation of the monitoring function SS2-M
t_2:	Delay time elapses, monitoring of stop position (SOS) is activated
t_{Delay}:	Set delay time for controlled braking of motor

Motion monitoring modules
PNOZ m EF 1MM

Sequence with standstill limit value for automatic SOS:

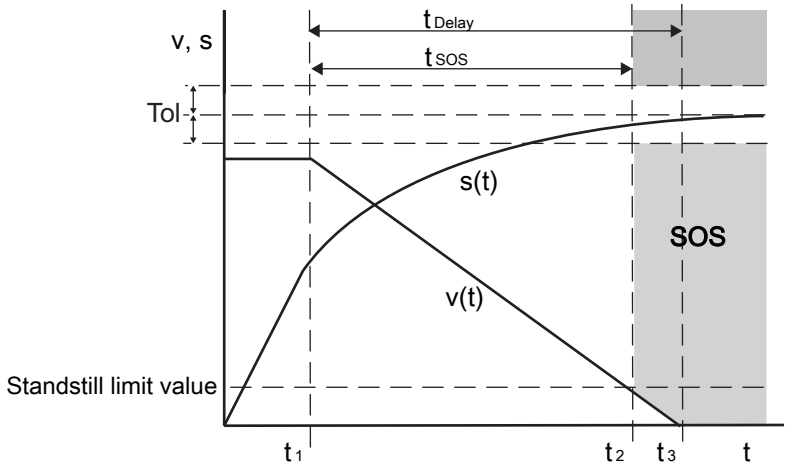

Legend

t_1:	Activation of the monitoring function SS2-M
t_2:	Standstill limit value for automatic SOS reached, monitoring of stop position (SOS) is activated
t_3:	Delay time elapses
t_{Delay}:	Set delay time for controlled braking of motor
t_{STO}:	Actual time from activation of monitoring function until STO is activated

Sequence when stop position is violated:

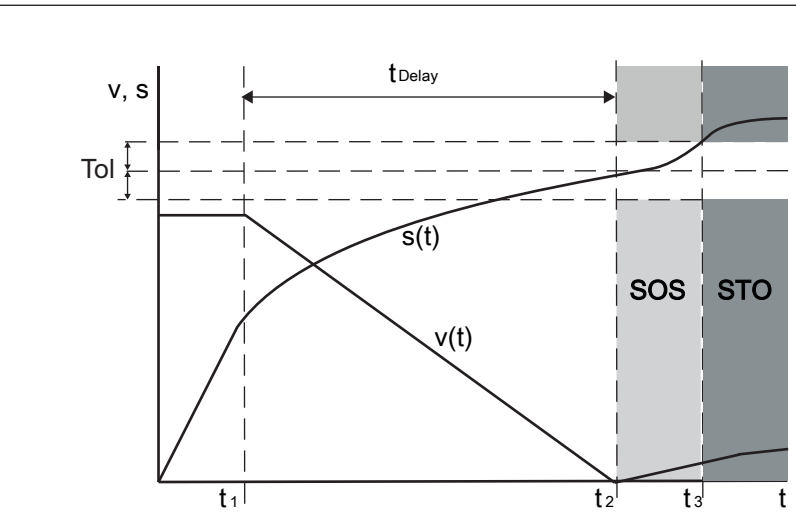

Motion monitoring modules
PNOZ m EF 1MM

Legend

t_1:	Activation of the monitoring function SS2-M
t_2:	Standstill limit value for automatic SOS reached, monitoring of stop position (SOS) is activated
t_3:	Stop position outside of tolerance window, safety function "Safe torque off" (STO) is activated
t_{Delay}:	Set delay time for controlled braking of motor

Safely limited acceleration monitoring (SLA-M)

The monitoring function ***Safely limited acceleration monitoring*** monitors the speed change per time unit.
Both the acceleration and the deceleration can be monitored.
Monitoring checks whether the acceleration or deceleration exceeds or falls below a certain limit value.

4 SLA-M elements can be configured per axis in the PNOZmulti Configurator.

The monitoring function ***Safely limited acceleration monitoring*** is activated with a rising edge at the start input. The trigger detection phase starts with a falling edge at the start input. In this process the current speed is taken as the start speed.

Monitoring of safely limited acceleration starts,

- when the trigger threshold is passed, that is, when the start speed changes by the configured percentage (V1).
- When monitoring starts within the maximum trigger time (t1).

When monitoring is started, the set acceleration is calculated as a straight line V_{Set}. A tolerance band $V_{Tolerance}$ is calculated from the Tolerance and V_{Edge} parameters. If the actual speed V_{Actual} leaves the tolerance band, the output ***Enable SLA*** switches off.

Monitoring is ended,

- When monitoring is reset by a rising edge at the start input,
- When a range has been violated and it is no longer possible to return within the valid range,
- When the target speed is passed.

Motion monitoring modules
PNOZ m EF 1MM

Example: Monitoring for too fast acceleration

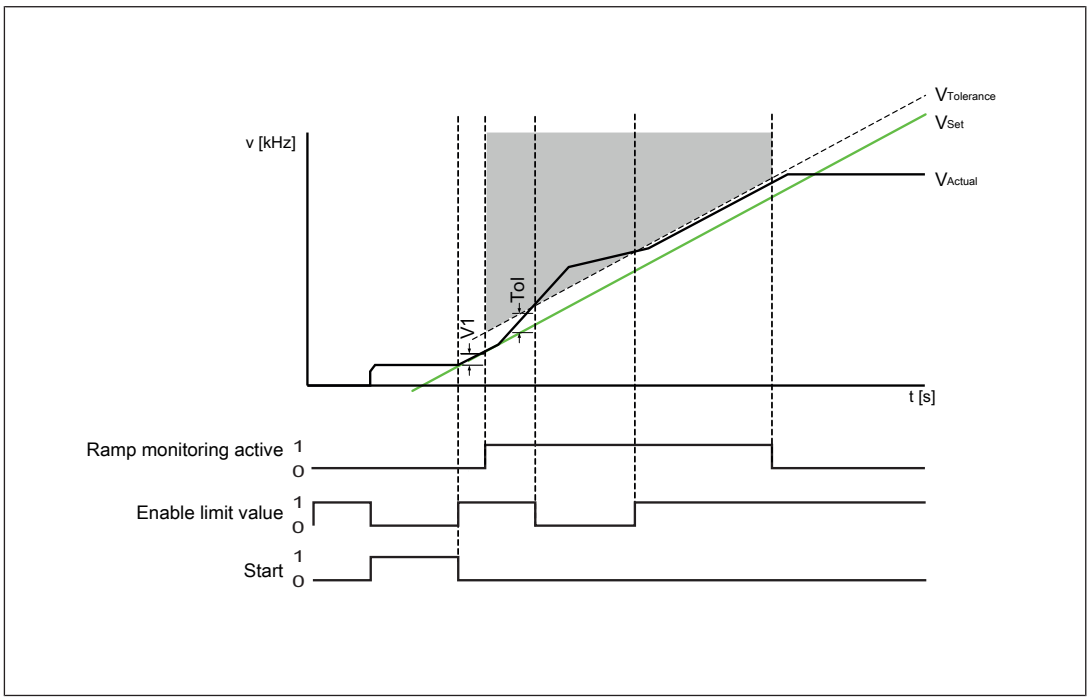

Safely limited acceleration range monitoring (SAR-M)

The monitoring function ***Safely limited acceleration monitoring*** monitors the speed change per time unit.
In contrast to the monitoring function SLA-M, safely limited acceleration range monitoring monitors not only a limit value but also the upper and lower limit value simultaneously. Both the acceleration and the deceleration can be monitored.

Otherwise the functionality is the same as the monitoring function SLA-M.

4 SAR-M elements can be configured per axis in the PNOZmulti Configurator.

Motion monitoring modules
PNOZ m EF 1MM

Example: Monitoring for too fast and too slow acceleration

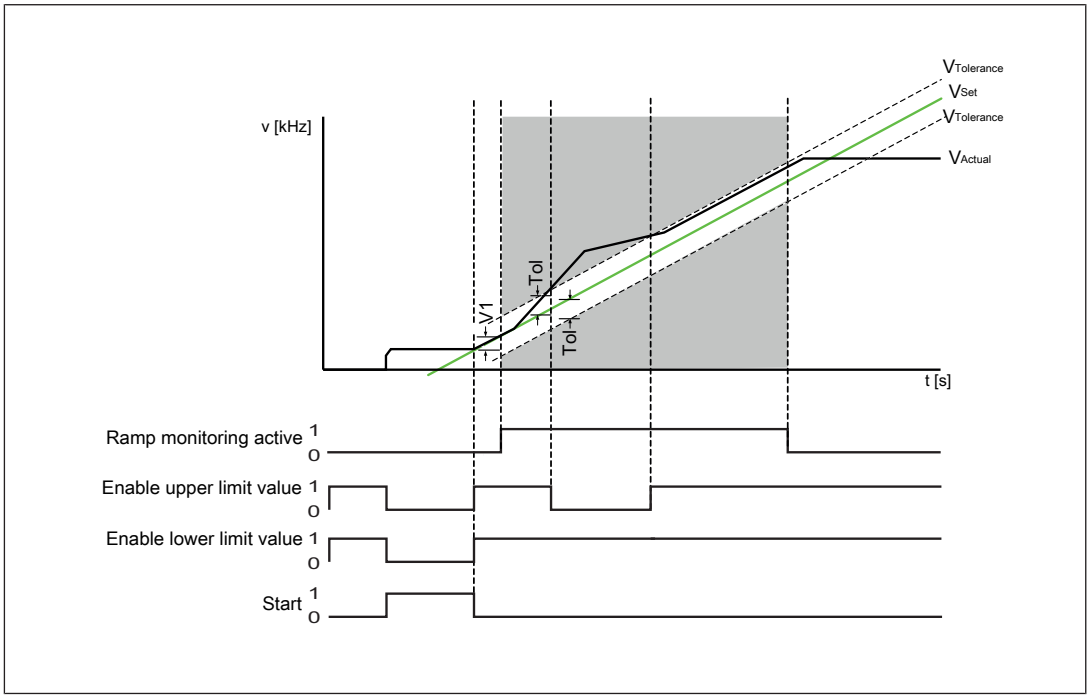

Central motion monitoring functions

These functions apply centrally for all the monitoring functions.

Hysteresis

A central hysteresis can be configured for the monitoring functions. This prevents the outputs from bouncing if there are fluctuations around the response value. The hysteresis takes effect when the output is switched on.

Validation cut-off frequency

As implausible sensor signals may arise due to jitter on the sensors around the stop position, a central validation cut-off frequency must be configured for sensor types with proximity switches in the PNOZmulti Configurator (edge jitter is caused by the position control of the drive frequency converter or by external interference signals).

If the value of the validation cut-off frequency falls below the configured value, the feasibility check of the sensors will no longer be run.

Advanced Settings tab

A tolerance time can be configured for tracks AB, Z and S respectively.

The tolerance time influences the sensitivity towards invalid signal levels (e.g. in the event of EMC interference).

The greater the configured tolerance time, the less sensitive the system will be towards invalid signal levels.

The tolerance time can be deactivated for individual tracks by setting 0 ms.

System reaction time

Calculation of the maximum reaction time between an input switching off and a linked output in the system switching off is described in the document "PNOZmulti System Expansion [30]".

Proximity switch

- Proximity switches can be used with a pnp or npn output.
- The proximity switches must be fitted so that at least one is always activated. In other words, the proximity switches must be fitted so that the recorded signals always overlap.
- The cable used to connect the proximity switches must be shielded (see connection diagrams in the chapter entitled "EMC-compliant wiring").
- A DC voltage in the range of 0 - 30 V can be monitored via track S. It should be used to monitor the supply voltage of the proximity switches.

Proximity switch assembly:

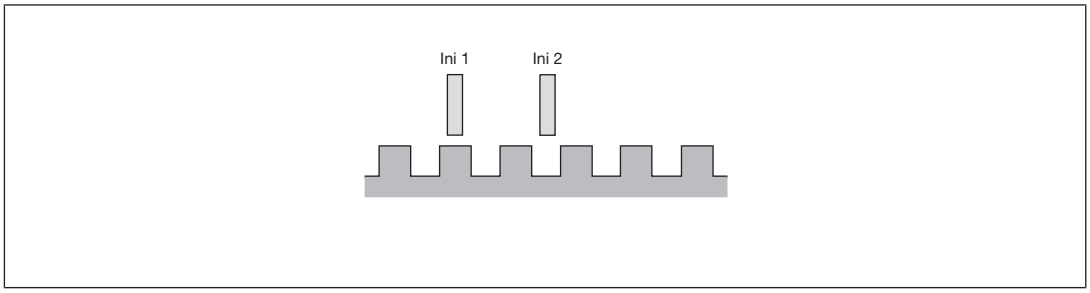

Signal characteristics:

Proximity switch combinations	Signal image in an energised state
PNP / PNP	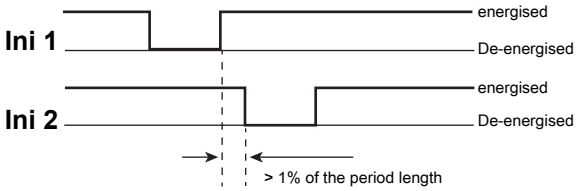
NPN / NPN	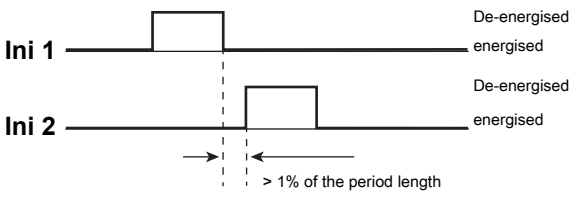

Motion monitoring modules
PNOZ m EF 1MM

Proximity switch combinations	Signal image in an energised state
NPN / PNP	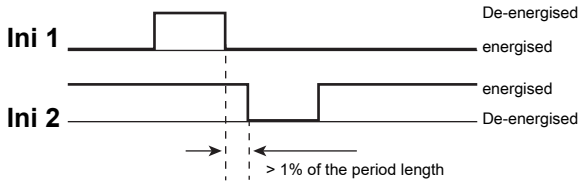
PNP / NPN	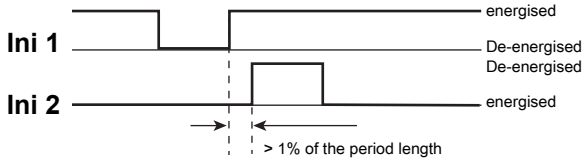

- For a full configuration, the maximum frequency of the sensors you are using must be entered in the PNOZmulti Configurator (see sensor's data sheet).

Special features for proximity switches with reduced diagnostics

- A: pnp, B: pnp
- It is permitted that both proximity switches are energised simultaneously.
- The safety level is reduced.
- The cables for connecting the proximity switches must be laid separately.
- The supply voltage of the proximity switches must be monitored (e.g. via track S).

Encoder

- The following encoders can be used:
  - TTL, HTL (single-ended or differential signals)
  - Sin/Cos 1 Vss
  - Hiperface®
- The encoders can be connected with or without Z index (0 index).
- The cables used to connect the encoders must be shielded (see connection diagrams in the chapter entitled "EMC-compliant wiring").
- A proximity switch can also be connected to track Z to monitor for broken shearpins.
  Please note:
  Broken shearpin monitoring only becomes active when
  - The minimum speed is exceeded

    and

– The tolerance for detecting feasibility errors has elapsed.

The minimum speed and tolerance depend on the ratio of the frequency on tracks AB "f_{AB}" to the frequency on track Z "f_Z" in your configuration (see PNOZmulti Configurator ***Motion Monitor Element***, ***Calculated Ratio AB/Z***).
Minimum speed:

– Calculated ratio AB/Z ≥ 1.0
f_Z = 10 mHz or $f_{AB} = (f_{AB}/f_Z) \times 10$ mHz

– when f_{AB}/f_Z ***Ratio*** < 1.0
f_{AB} = 10 mHz or $f_Z = 10\ mHz/(f_{AB}/f_z)$

Tolerance for detecting feasibility errors:

– when f_{AB}/f_Z ***Ratio*** ≥ 1.0
7.5 Z pulses or 7.5 x (f_{AB}/f_Z) AB pulses

– when f_{AB}/f_Z ***Ratio*** **<** 1.0
4.5 AB pulses or 4.5 x (f_{AB}/f_Z) Z pulses

- With Hiperface encoders, the Sin- Cos track is recorded and monitored via an adapter (see Adapters for encoders [📖 856]).
- Track S can be used:
  – To connect an encoder's error output.
  – To monitor voltages between 0 V and 30 V for a permitted upper and lower limit. For example, the encoder's supply voltage can be monitored.
- The maximum frequency of the used encoders must be entered for a complete configuration.
- Pay attention to the values in the technical details.

Output signals

Output signals TTL, HTL

Single ended

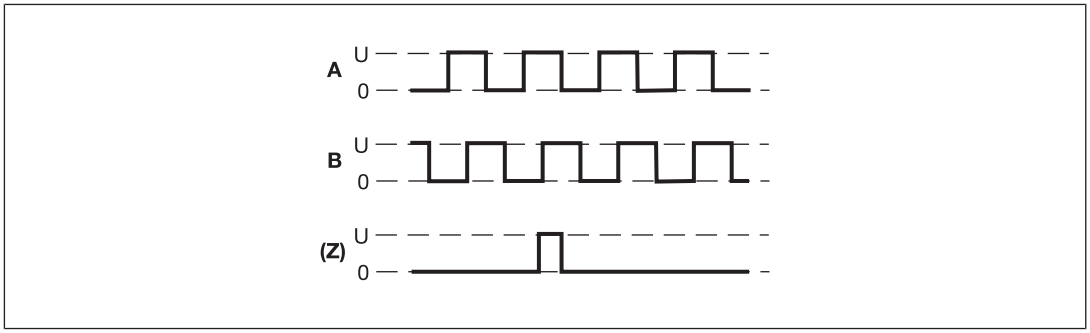

Motion monitoring modules
PNOZ m EF 1MM

Differential

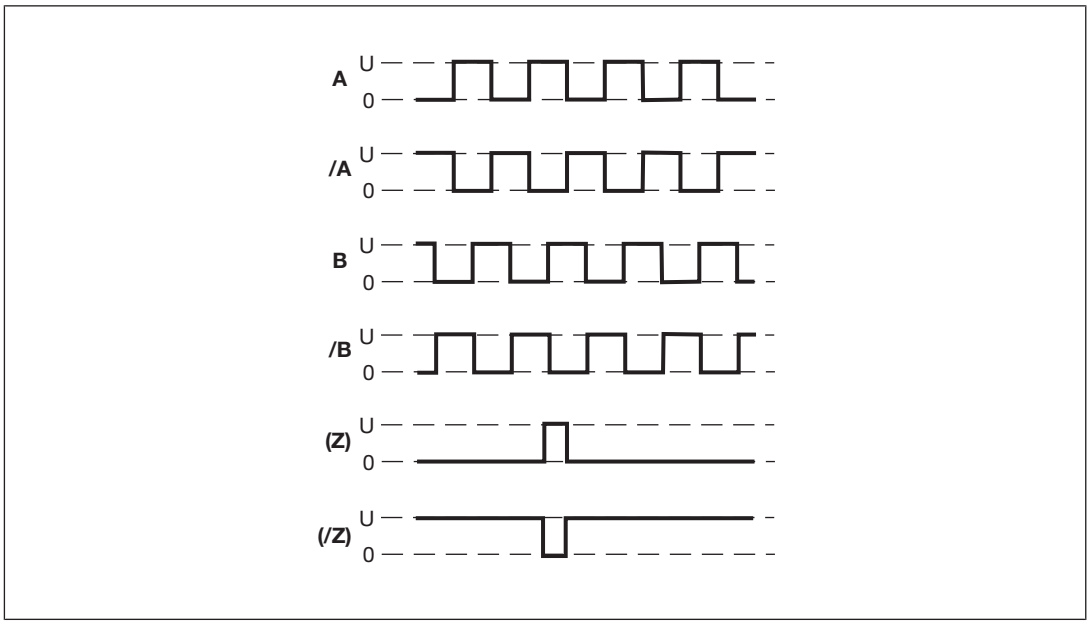

Output signals Sin/Cos (1 Vss)

Single ended with reference track (e.g. Hiperface ®)

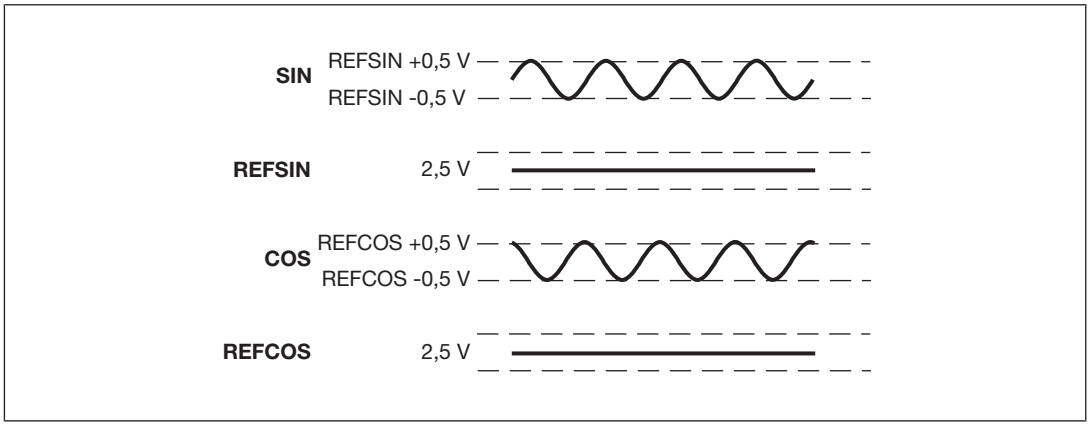

Motion monitoring modules
PNOZ m EF 1MM

Differential with/without Z index (e.g. Heidenhain 1 Vss)

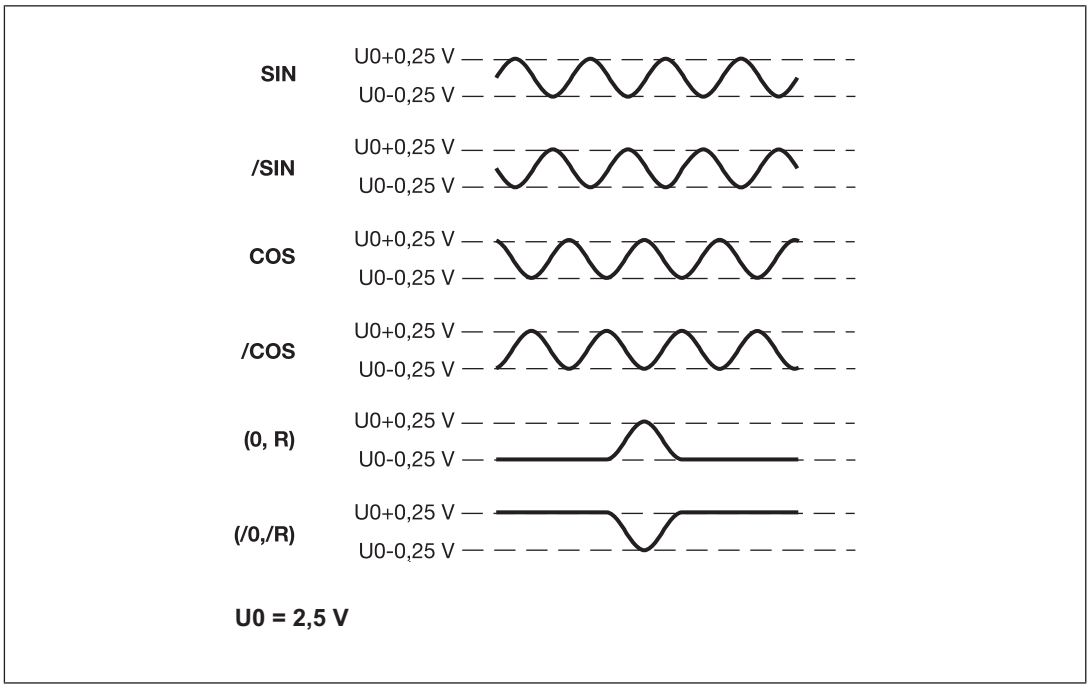

Adapters for encoders

The adapter records the data between the encoder and the drive and makes it available to the PNOZ m EF 1MM via the Mini-IO socket.

Pilz supplies complete adapters as well as ready-made cable with Mini-IO connector, which can be used when making your own adapter. The range of products in this area is constantly being expanded. Please contact us about the range of adapters that is currently available.

Motion monitoring modules
PNOZ m EF 1MM

Installation

Dimensions in mm

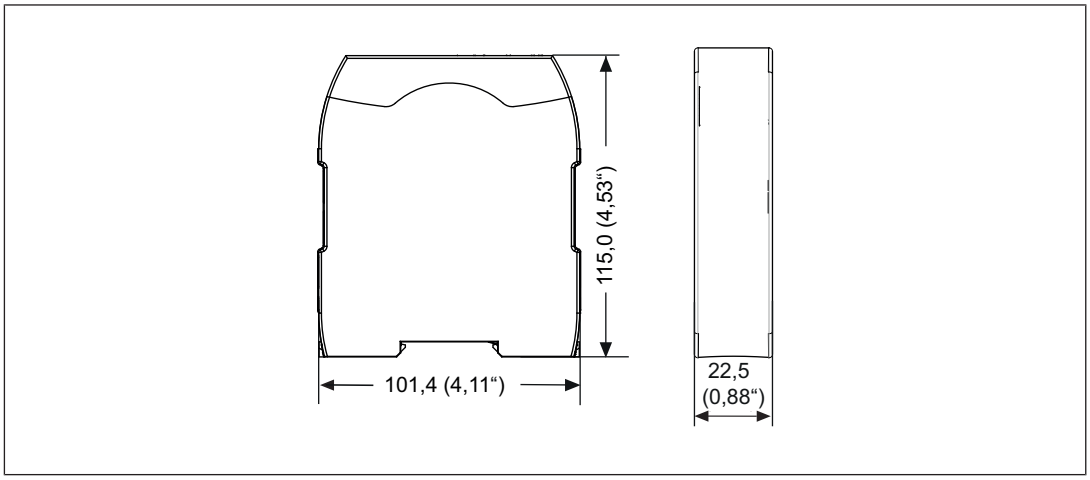

Commissioning

Wiring

The wiring is defined in the circuit diagram of the PNOZmulti Configurator.

Please note:

- Information given in the Technical details [📖 870] must be followed.
- The position of the expansion module is specified in the Hardware configuration of the PNOZmulti Configurator.
- Use copper wiring with a temperature stability of 75 °C.
- The power supplies for the safety system and sensors must comply with the regulations for low voltages with safe isolation.
- The cable used to connect the encoders and proximity switches must be shielded (see connection diagrams in the chapter entitled "EMC-compliant wiring").
- The shield may only be connected to earth at a single point.
- Earth loops should be avoided.
- If possible, the connections for the various earth potentials (GND, A2) should not be connected on the PNOZ m EF 1MM but should be connected directly to the GNDs on the connected units. otherwise noise susceptibility may be increased significantly (conductor loops are not permitted).

Motion monitoring modules
PNOZ m EF 1MM

Pin assignment of Mini-IO socket

Mini-IO socket 8-pole	PIN	Track
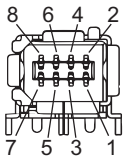	1	S
	2	GND
	3	Z
	4	A
	5	/A
	6	/Z
	7	B
	8	/B

Motion monitoring modules
PNOZ m EF 1MM

Connection of proximity switches

The following proximity switch combinations can be connected:

- A: pnp, B: pnp
- A: npn, B: npn
- A: pnp, B: npn
- A: npn, B: pnp

When connecting proximity switches please note:

- Proximity switches can be connected to
  - terminals A12, B12, GND for axis 1
    or
  - tracks A, B and GND of the Mini-IO socket (X12 for axis 1).
- Track S (S12) should be used to monitor the supply voltage (see drawing). A permitted voltage range can be entered in the menu.
- Connect the proximity switch to 24 VDC of the power supply.
- When connecting the proximity switches, please refer to the chapter entitled "EMC-compliant wiring".
- Invalid signals may occur with long cable lengths. In this case we recommend that you connect a resistor between the signal lines, as shown in the diagrams.
- Connection of the proximity switches may only be performed in three-wire technology and not in two-wire technology.
- Special features for proximity switches with reduced diagnostics:
  - A: pnp, B: pnp
  - It is permitted that both proximity switches are energised simultaneously.
  - The safety level is reduced.
  - The cables for connecting the proximity switches must be laid separately.
  - The supply voltage of the proximity switches must be monitored (e.g. via track S).

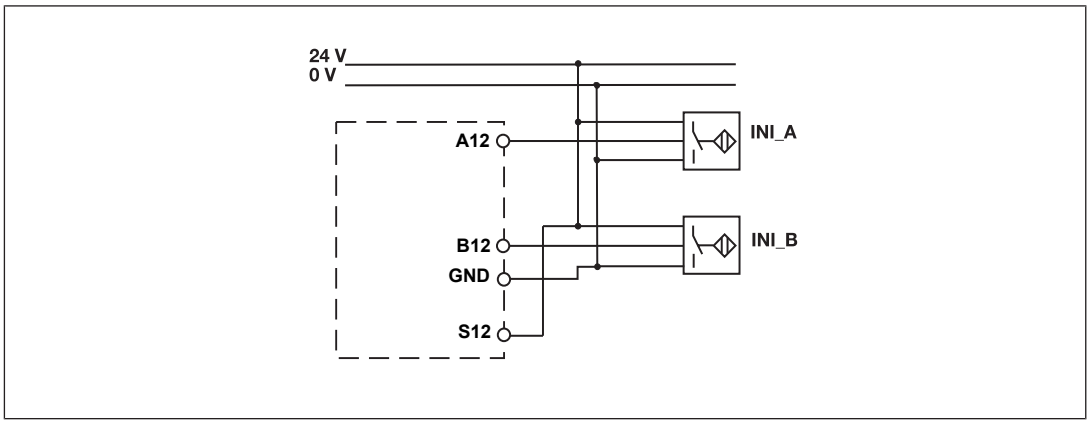

Motion monitoring modules
PNOZ m EF 1MM

pnp proximity switch with resistor R = 10 kOhm

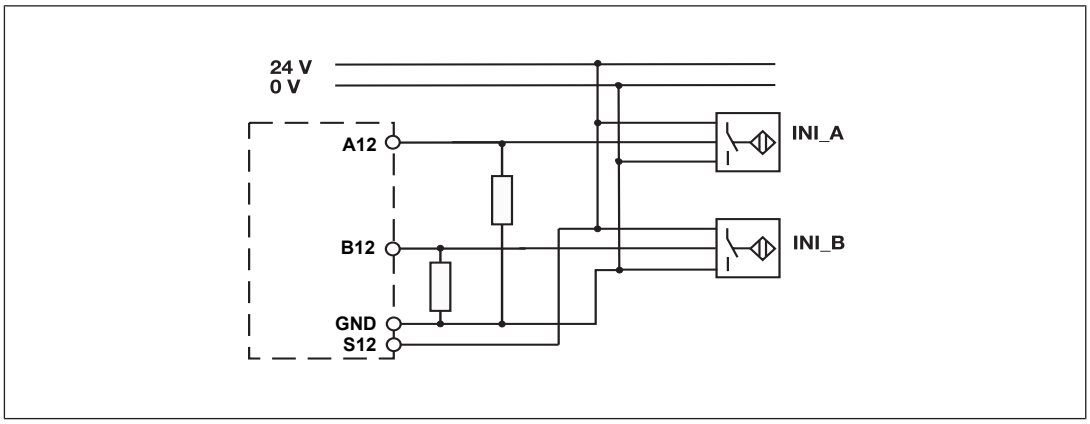

npn proximity switch with resistor R = 47 kOhm

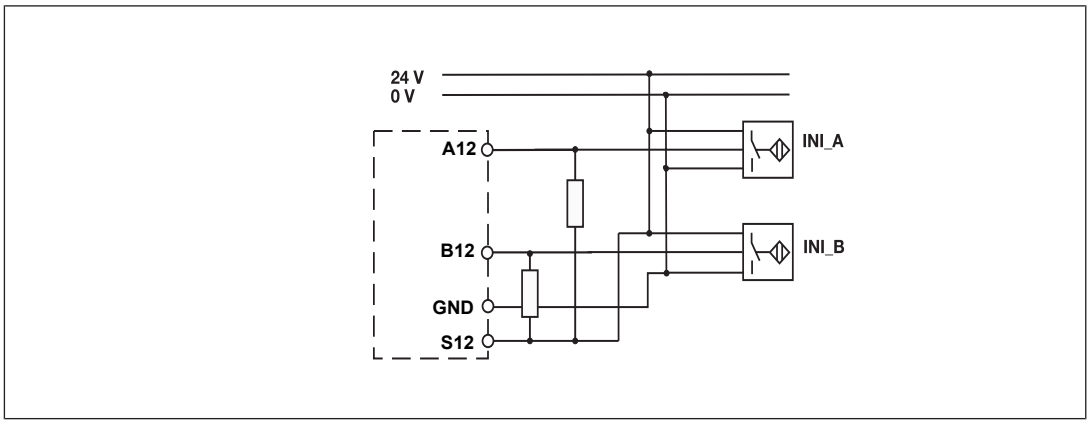

Connection of an encoder

Proceed as follows when connecting the encoder:

- The encoder can be connected via an adapter (e.g. MM A Mini-IO-CAB99) or directly to the PNOZ m EF 1MM.
- Use only shielded cables for all connections. Please refer to the chapter entitled "EMC-compliant wiring".
- Always connect GND on the encoder to GND on the Mini-IO connector.
- If the encoder signals are not terminated with 120 Ohm in the frequency converter, the encoder signals must be terminated with Z_0 = 120 Ohm between A and /A, B and /B, Z and /Z.
- Please refer to the information provided by the encoder manufacturer with regard to the recommended max. cable length when taking into consideration
  - Output frequency
  - Supply voltage
  - Operating temperature

– Existing interference

When calculating the maximum cable length, remember that the length of the adapter cable must also be taken into account.

Connect encoder

Encoder types:

- TTL single ended
- HTL single ended

Please note:

- Tracks/A, /B, Z and /Z must remain free

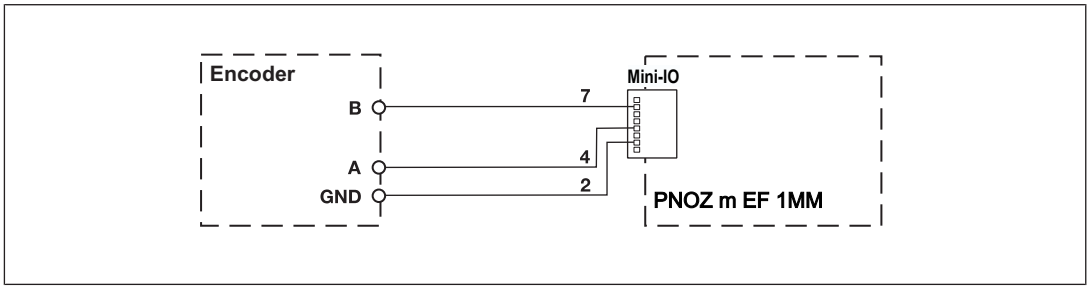

Encoder types:

- TTL Differential
- HTL differential
- sin/cos 1 Vss
- Hiperface

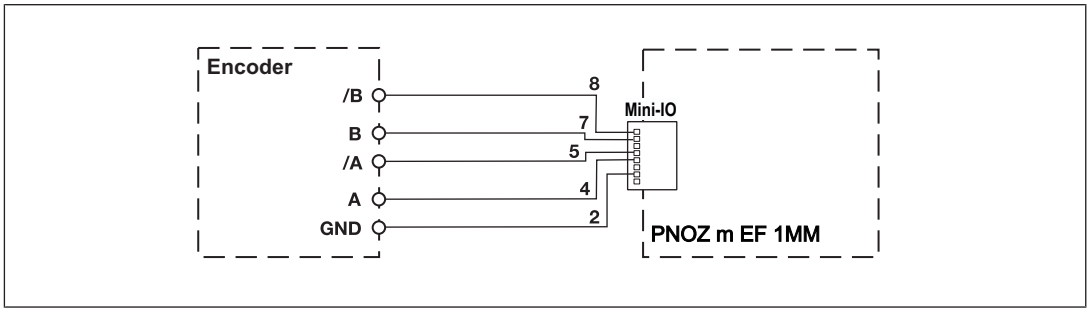

Motion monitoring modules
PNOZ m EF 1MM

Connect encoder with Z index

Encoder types:

- TTL single ended Z Index
- HTL single ended Z Index

Please note:

- Tracks /A, /B and /Z must remain free
- When using the encoder type sin/cos 1 Vss Z Index, the length of the encoder cable may be max. 30 m.

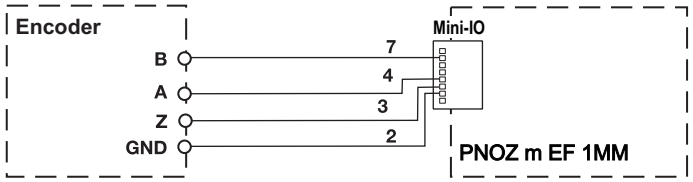

Encoder types:

- TTL differential + Z Index
- HTL differential + Z Index
- sin/cos 1 Vss Z Index

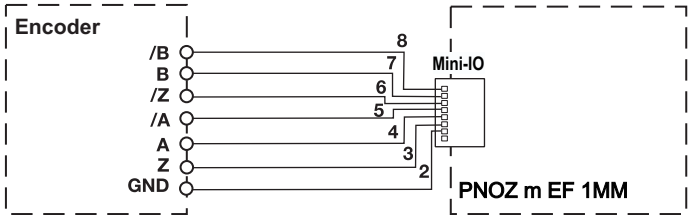

Connect encoder via an adapter

The adapter (see Accessories [873]) is connected between the encoder and the drive. The output on the adapter is connected to the Mini-IO socket on the PNOZ m EF 1MM.

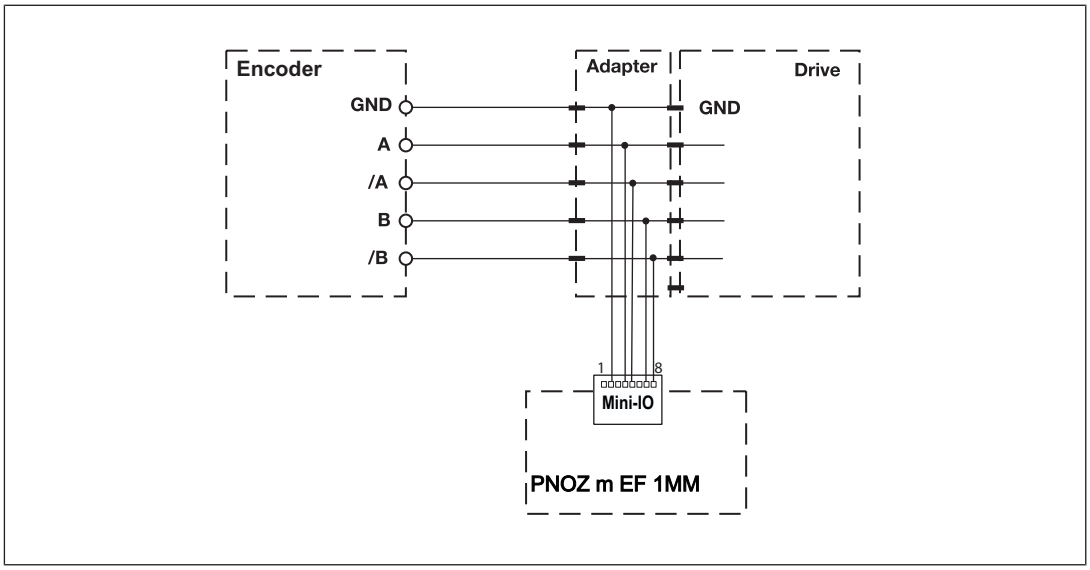

Connection of proximity switch and encoder

When connecting the encoders and proximity switches, please refer to the chapter entitled "EMC-compliant wiring".

Sensor types:

- Configuration: HTL single Z Freq. Ini pnp
  - HTL single ended (A,B) + Ini pnp (Z)
  - HTL single ended (A,B) + HTL differential (A as Z)
  - HTL single ended (A,B) + HTL single ended (A as Z)
- Configuration: TTL single Z Freq. Ini pnp
  - TTL single ended (A,B) + Ini pnp (Z)
  - TTL single ended (A,B) + HTL differential (A as Z)
  - TTL single ended (A,B) + HTL single ended (A as Z)

Motion monitoring modules
PNOZ m EF 1MM

Please note:
Tracks /A, /B and /Z must remain free.

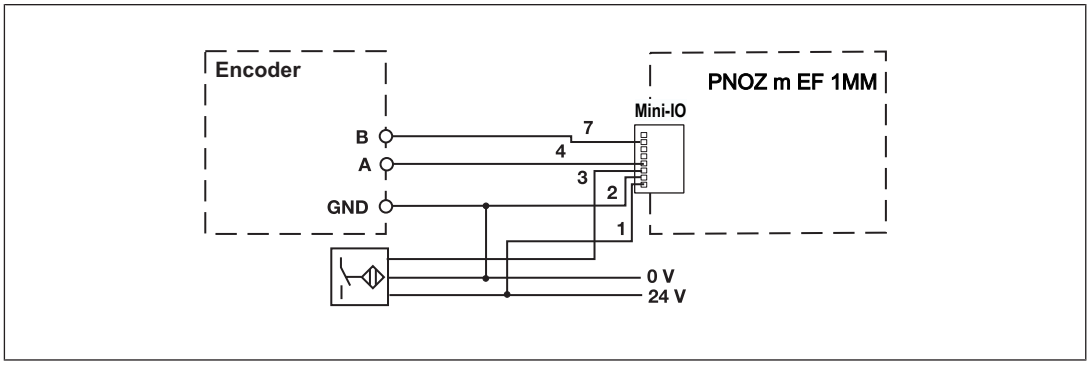

Sensor types:

- Configuration: TTL differential Z Freq. Ini pnp
  - TTL differential (A,/A,B,/B) + Ini pnp (Z)
  - TTL differential (A,/A,B,/B) + HTL differential (A as Z)
  - TTL differential (A,/A,B,/B) + HTL single ended (A as Z)
- Configuration: HTL differential Z Freq. Ini pnp
  - HTL differential (A,/A,B,/B) + Ini pnp (Z)
  - HTL differential (A,/A,B,/B) + HTL differential (A as Z)
  - HTL differential (A,/A,B,/B) + HTL single ended (A as Z)
- Configuration: sin/cos 1 Vss Z Freq. Ini pnp
  - sin/cos 1 Vss (A,/A,B,/B) + Ini pnp (Z)
  - sin/cos 1 Vss (A,/A,B,/B) + HTL differential (A as Z)
  - sin/cos 1 Vss (A,/A,B,/B) + HTL single ended (A as Z)
- Configuration: Hiperface Z Freq. Ini pnp
  - Hiperface (A,/A,B,/B) + Ini pnp (Z)
  - Hiperface (A,/A,B,/B) + HTL differential (A as Z)
  - Hiperface (A,/A,B,/B) + HTL single ended (A as Z)

Please note:
Track /Z must remain free!!

Motion monitoring modules
PNOZ m EF 1MM

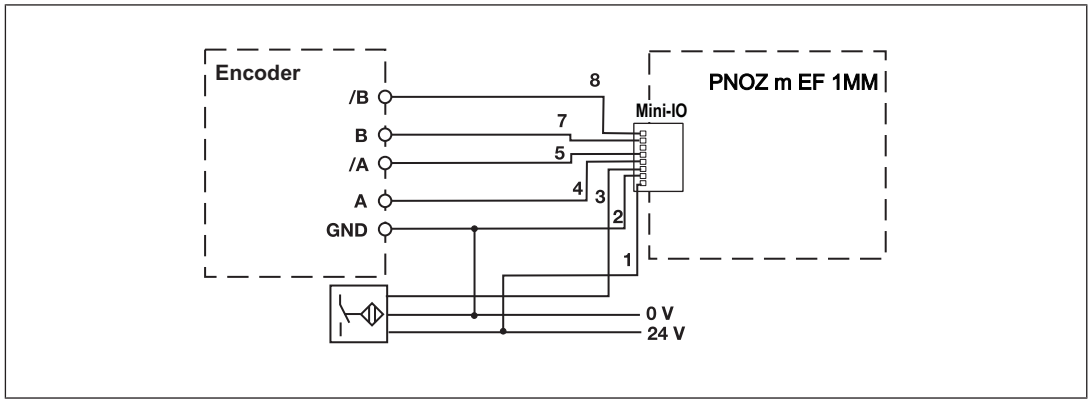

Motion monitoring modules
PNOZ m EF 1MM

EMC-compliant wiring

EMC-compliant wiring for connecting an encoder

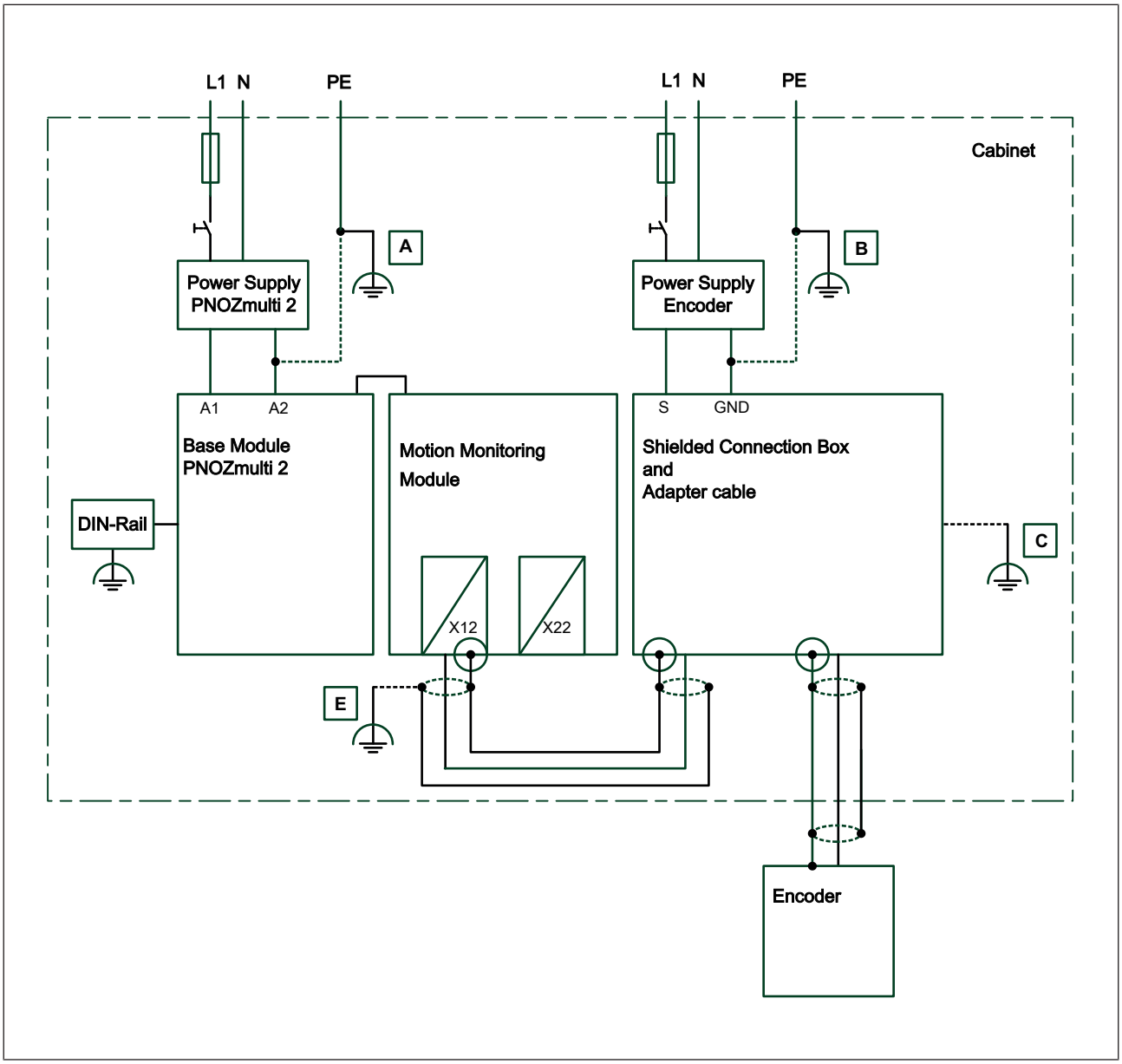

To avoid EMC interference we recommend that the shield on the sensor cable is connected to earth at **C** or **E**. However, depending on the application, it may be helpful to establish the connection to functional earth at another point (in this case **A** or **B**).
Conductor loops outside the shield must be avoided.
If a shielded junction box is not used, the shield must run continuously from the sensor to the evaluation device.

Motion monitoring modules
PNOZ m EF 1MM

EMC-compliant wiring for connecting an encoder with drive

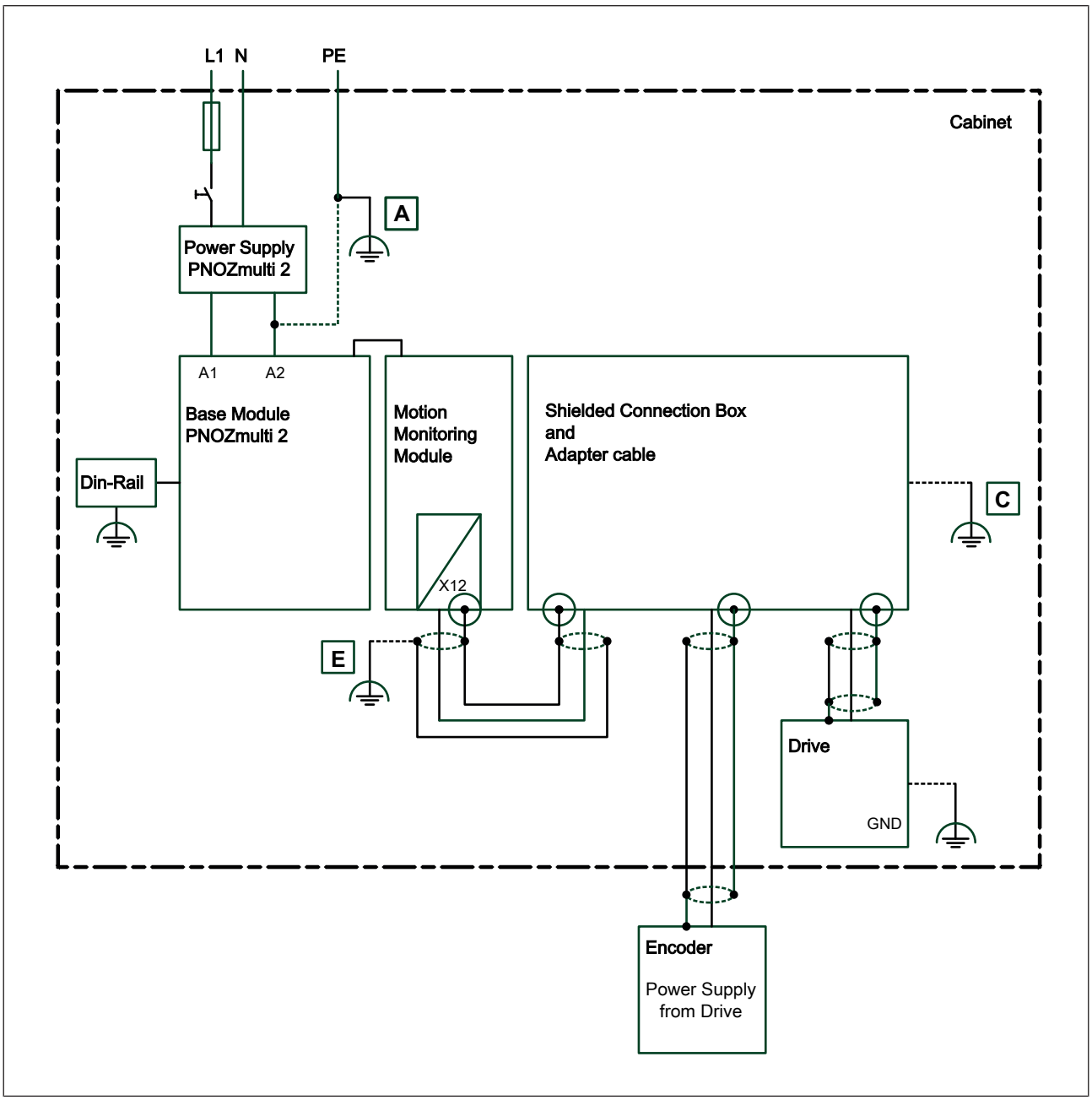

To avoid EMC interference we recommend that the shield on the sensor cable is connected to earth at **C** or **E**. However, depending on the application, it may be helpful to establish the connection to functional earth at another point (in this case **A**).
Conductor loops outside the shield must be avoided.
If a shielded junction box is not used, the shield must run continuously from the sensor to the evaluation device.

Motion monitoring modules
PNOZ m EF 1MM

EMC-compliant wiring for connecting 2 proximity switches

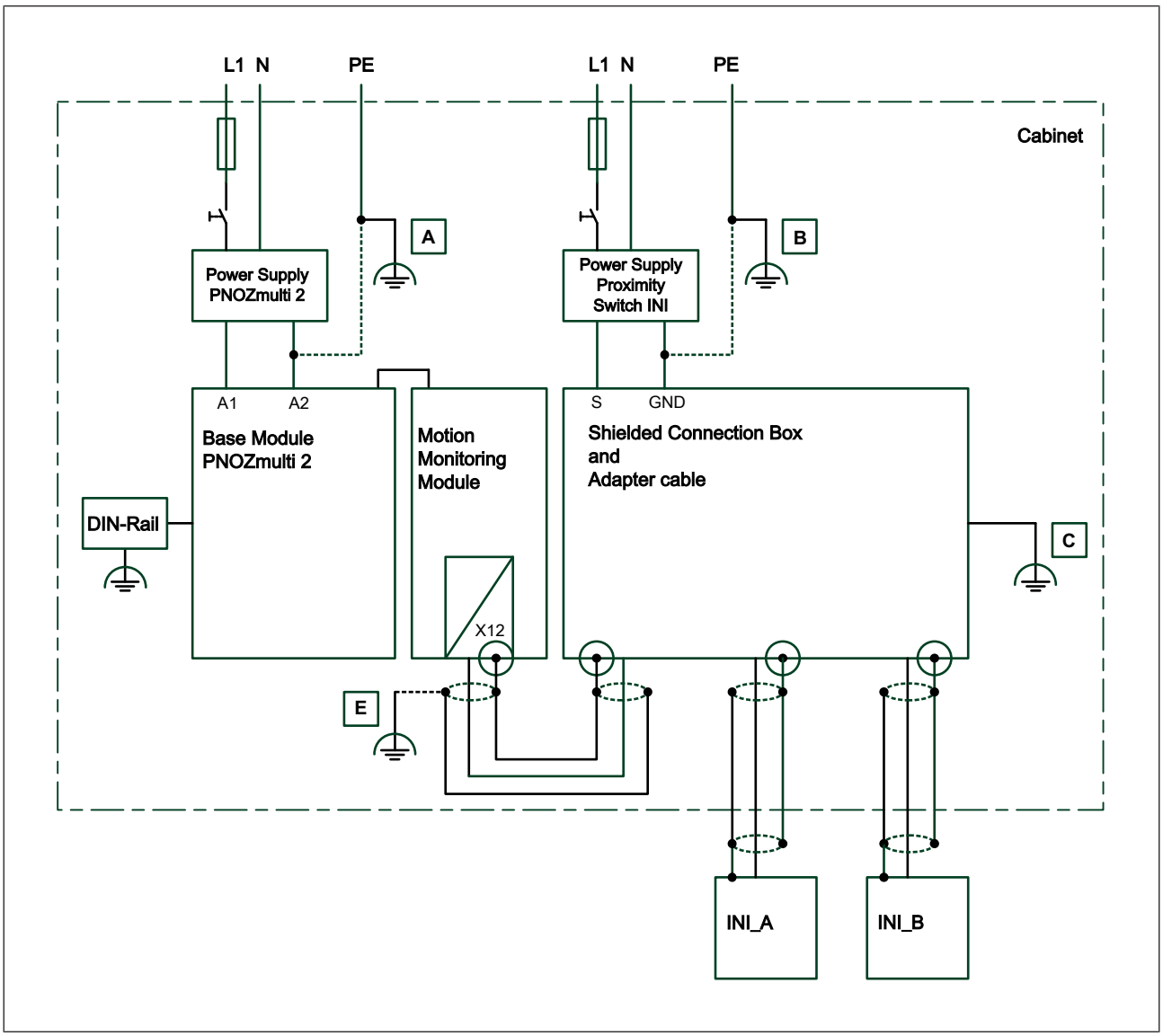

To avoid EMC interference we recommend that the shield on the sensor cable is connected to earth at **C** or **E**. However, depending on the application, it may be helpful to establish the connection to functional earth at another point (in this case **A** or **B**).
Conductor loops outside the shield must be avoided.
If a shielded junction box is not used, the shield must run continuously from the sensor to the evaluation device.

Motion monitoring modules
PNOZ m EF 1MM

EMC-compliant wiring for connecting an encoder and a proximity switch

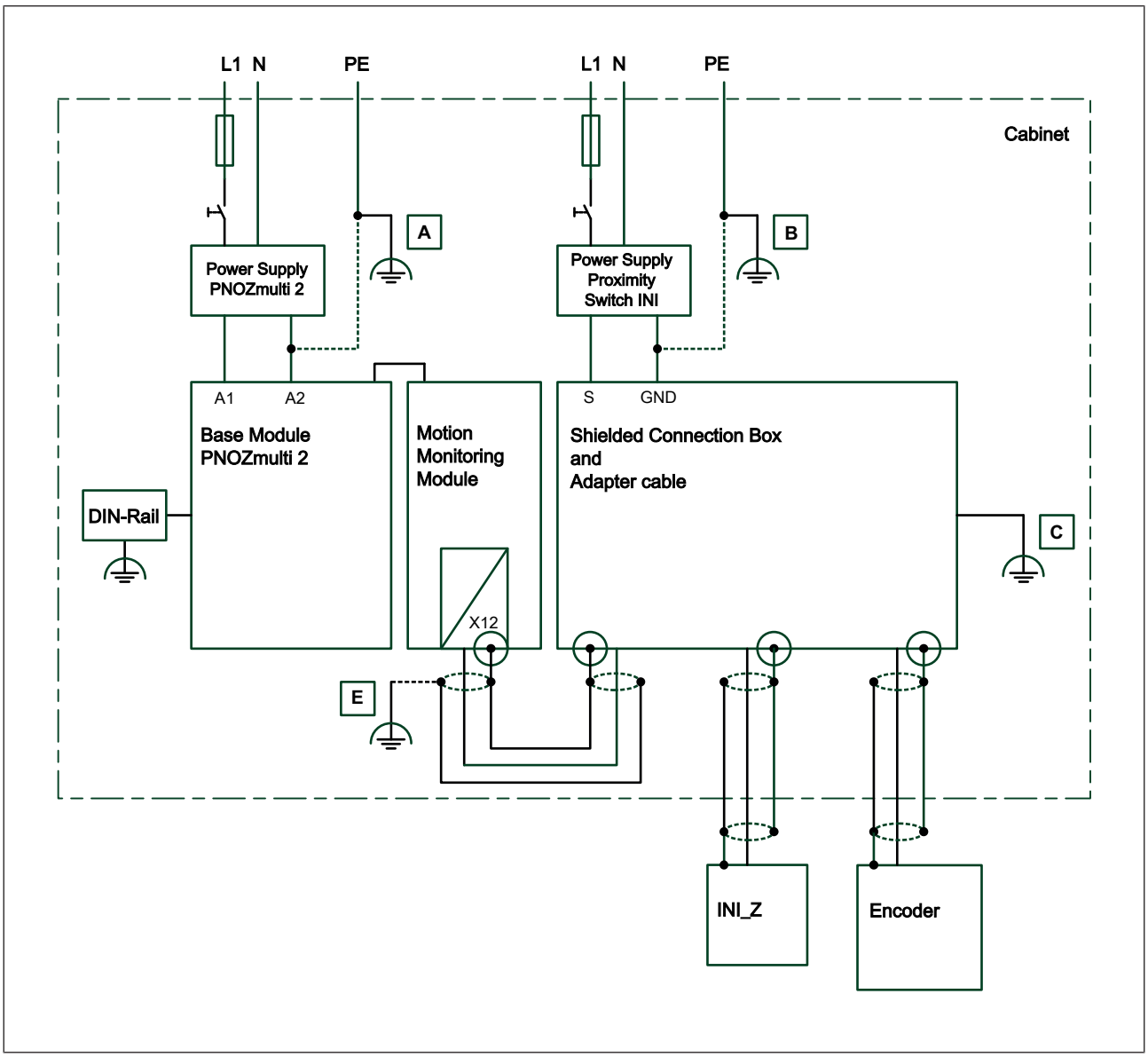

To avoid EMC interference we recommend that the shield on the sensor cable is connected to earth at **C** or **E**. However, depending on the application, it may be helpful to establish the connection to functional earth at another point (in this case **A** or **B**).
Conductor loops outside the shield must be avoided.
If a shielded junction box is not used, the shield must run continuously from the sensor to the evaluation device.

Motion monitoring modules
PNOZ m EF 1MM

Technical details

General	
Certifications	**CE, EAC (Eurasian), KOSHA, TÜV, cULus Listed**
Application range	**Failsafe**
Module's device code	**00E3h**
Electrical data	
Supply voltage	
for	**Module supply**
internal	**Via base unit**
Voltage	**24 V**
Kind	**DC**
Current consumption	**90 mA**
Power consumption	**2 W**
Max. power dissipation of module	**2,2 W**
Status indicator	**LED**
Proximity switch input	
Number of inputs	**2**
Input signal level	
Signal level at "1"	**11 - 30 V**
Signal level at "0"	**0,0 - 3,0 V**
Input resistance	**22 kOhm**
Input's frequency range	**0 - 5 kHz**
Configurable monitoring frequency	
Without hysteresis	**0,1 Hz - 5 kHz**
Incremental encoder input	
Number of inputs	**1**
Connection type	**Mini-IO female connector, 8-pin**
Input signal level	**0,5 - 30 Vss**
Phase position for the differential signals A, /A and B,/B	**90° ±30°**
Overload protection	**-50 - 65 V**
Input resistance	**20 kOhm**
Input's frequency range	**0 - 500 kHz**
Configurable monitoring frequency	
Without hysteresis	**0,1 Hz - 500 kHz**
Inputs	
Potential isolation	**yes**
Times	
Reaction time after limit value is exceeded	**1/f_ist + 16 ms**

Motion monitoring modules
PNOZ m EF 1MM

Environmental data	
Ambient temperature	
In accordance with the standard	**EN 60068-2-14**
Temperature range	**0 - 60 °C**
Forced convection in control cabinet off	**55 °C**
Storage temperature	
In accordance with the standard	**EN 60068-2-1/-2**
Temperature range	**-25 - 70 °C**
Climatic suitability	
In accordance with the standard	**EN 60068-2-30, EN 60068-2-78**
Condensation during operation	**Not permitted**
Max. operating height above sea level	**2000 m**
EMC	**EN 61131-2**
Vibration	
In accordance with the standard	**EN 60068-2-6**
Frequency	**5 - 150 Hz**
Acceleration	**1g**
Shock stress	
In accordance with the standard	**EN 60068-2-27**
Acceleration	**15g**
Duration	**11 ms**
Airgap creepage	
In accordance with the standard	**EN 61131-2**
Overvoltage category	**II**
Pollution degree	**2**
Protection type	
In accordance with the standard	**EN 60529**
Housing	**IP20**
Terminals	**IP20**
Mounting area (e.g. control cabinet)	**IP54**
Potential isolation	
Potential isolation between	**Sensor and system voltage**
Type of potential isolation	**Functional insulation**
Rated insulation voltage	**30 V**
Rated surge voltage	**2500 V**
Mechanical data	
Mounting position	**horizontally on mounting rail**
DIN rail	
Top hat rail	**35 x 7,5 EN 50022**
Recess width	**27 mm**

Motion monitoring modules
PNOZ m EF 1MM

Mechanical data	
Material	
Bottom	**PC**
Front	**PC**
Top	**PC**
Connection type	**Spring-loaded terminal, screw terminal**
Mounting type	**plug-in**
Conductor cross section with screw terminals	
1 core flexible	**0,25 - 2,5 mm², 24 - 12 AWG**
2 core with the same cross section, flexible without crimp connectors or with TWIN crimp connectors	**0,2 - 1,5 mm², 24 - 16 AWG**
Torque setting with screw terminals	**0,5 Nm**
Conductor cross section with spring-loaded terminals: Flexible with/without crimp connector	**0,2 - 2,5 mm², 24 - 12 AWG**
Spring-loaded terminals: Terminal points per connection	**2**
Stripping length with spring-loaded terminals	**9 mm**
Dimensions	
Height	**101,4 mm**
Width	**22,5 mm**
Depth	**111 mm**
Weight	**90 g**

Where standards are undated, the 2018-09 latest editions shall apply.

Safety characteristic data

Operating mode	EN ISO 13849-1: 2015 PL	EN ISO 13849-1: 2015 Category	EN IEC 62061 SIL CL	EN IEC 62061 PFH_D [1/h]	IEC 61511 SIL	IEC 61511 PFD	EN ISO 13849-1: 2015 T_M [year]
Monitoring 1 encoder	**PL d**	**Cat. 2**	**SIL CL 2**	**1,80E-08**	**SIL 2**	**1,58E-03**	**20**
Monitoring 2 encoder	**PL e**	**Cat. 3**	**SIL CL 3**	**1,01E-09**	**SIL 3**	**8,41E-05**	**20**
Monitoring safe encoder	**PL e**	**Cat. 4**	**SIL CL 3**	**2,35E-09**	**SIL 3**	**2,04E-04**	**20**
Logic	**PL e**	**Cat. 4**	**SIL CL 3**	**3,37E-10**	**SIL 3**	**2,88E-05**	**20**

All the units used within a safety function must be considered when calculating the safety characteristic data.

Motion monitoring modules
PNOZ m EF 1MM

Order reference

Product

Product type	Features	Order no.
PNOZ m EF 1MM	Expansion module	772 170

Accessories

Connection terminals

Product type	Features	Order no.
Spring terminals PNOZ mmcxp 1 pc.	Spring-loaded terminals, 1 piece	783 542
Screw terminals PNOZ mmcxp 1 pc.	Screw terminals, 1 piece	793 542

Terminator, jumper

Product type	Features	Order no.
PNOZ mm0.xp connector left	Jumper yellow/black to connect the modules, 10 pieces	779 260

Adapter cable

Product type	Features	Order no.
MM A MINI-IO CAB99	1.50 m	772200
MM A MINI-IO CAB99	2.50 m	772201
MM A MINI-IO CAB99	5.0 m	772202

Product type	Features	Order no.
PNOZ msi b4 Box	Connection box	773 845

Motion monitoring modules
PNOZ m EF 2MM



Overview

Unit features

Application of the product PNOZ m EF 2MM:

Expansion module for connection to a base unit from the PNOZmulti 2 system.

The product has the following features:

- Can be configured in the PNOZmulti Configurator
- Monitoring of 2 independent axes
- Measured value recorded by proximity switch and encoder
- Monitoring functions
  - Safe speed monitoring (SSM)
  - Safe speed range monitoring (SSR-M)
  - Safe direction of movement monitoring (SDI-M)
  - Safe operating stop monitoring (SOS-M)
  - Safe stop 1 monitoring (SS1-M)
  - Safe stop 2 monitoring (SS2-M)
  - Safely limited acceleration monitoring (SLA-M)
  - Safely limited acceleration range monitoring (SAR-M)
  - Analogue voltage (track S)
- LED display for:
  - Supply voltage
  - Diagnostics
  - Axis status
  - Fault
- Please refer to the document "PNOZmulti System Expansion" for details of the base units PNOZmulti 2 that can be connected.

Motion monitoring modules
PNOZ m EF 2MM

- Plug-in connection terminals:
  Either spring-loaded terminal or screw terminal available as an accessory (see Order references for accessories [📖 772]).

Front view

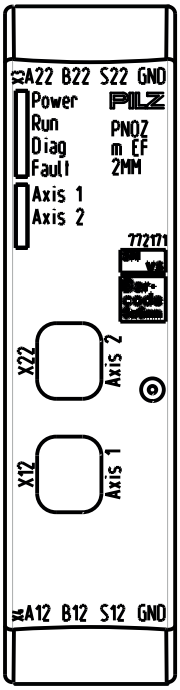

Legend:

- X4: Connection for proximity switch at axis 1
- X3: Connection for proximity switch at axis 2
- X12: Mini IO socket for connecting encoder or proximity switch at axis 1
- X22: Mini IO socket for connecting encoder or proximity switch at axis 2
- LEDs:
  - Power
  - Run
  - Diag
  - Fault
  - Axis 1
  - Axis 2

Motion monitoring modules
PNOZ m EF 2MM

Function description

Operation

The motion monitoring module PNOZ m EF 2MM can monitor two axes independently. The motion monitoring module signals the status of the monitored values to the base unit. Depending on the implemented safety circuit, the values may be transferred from the base unit to an output on the control system. Proximity switches or encoders are used to record the values.

The configuration of the motion monitoring module is described in detail in the PNOZmulti Configurator's online help.

The relay meets the following safety requirements:

- The circuit is redundant with built-in self-monitoring.
- The safety device remains effective in the case of a component failure.

Block diagram

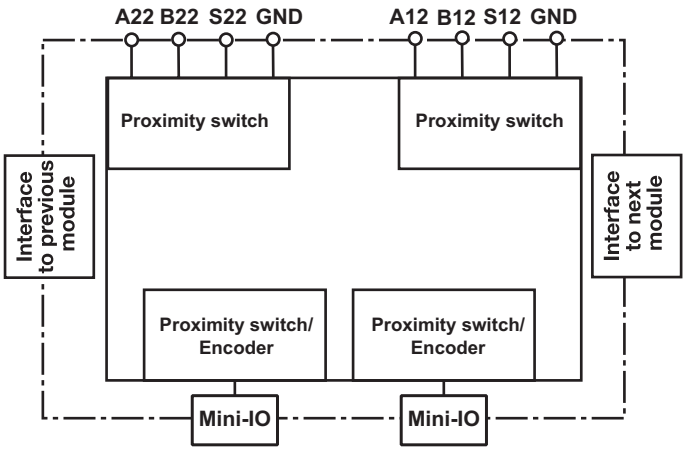

Monitoring functions

The motion monitoring module PNOZ m EF 2MM supports the following monitoring functions.

Please note that the position monitoring functions SOS-M, SDI-M and SS2-M cannot be used in conjunction with 2 proximity switches, as no position can be detected.

Safe speed monitoring

The ***Safe speed monitoring*** function (SSM) monitors the current speed to see if a limit value is exceeded.

Motion monitoring modules
PNOZ m EF 2MM

If the configured limit value is exceeded, the output switches off. As soon as the value falls below the limit value (plus hysteresis), the output switches off again.
If a manual reset is configured, the output will not switch back on until the value is inside the limit value (plus hysteresis) and the reset input is activated.

In PNOZmulti Configurator 12 areas can be configured per axis (with units < Version 2.0 only 8 limit values can be configured).

A tolerance range may also be set for the limit values used to monitor the speed. This tolerance range modifies the set limit values. As a result, one-off or periodic overshoots that exceed the limit values can be tolerated.
The following values can be configured for the tolerance range:

- Tolerance time (t1), which takes into account the length of the overshoots (maximum time for which the limit value may be exceeded). It must not be possible that the sum of all the overshoots exceeds the tolerance time (t1) within a tolerance period (t2).
- Tolerance period (t2), which takes into account the oscillation period (minimum time that must elapse between one limit value overshoot and the next)
- Tolerance amount (%), which takes into account the amplitude of the overshoots (maximum permitted percentage by which the configured limit values may be exceeded)

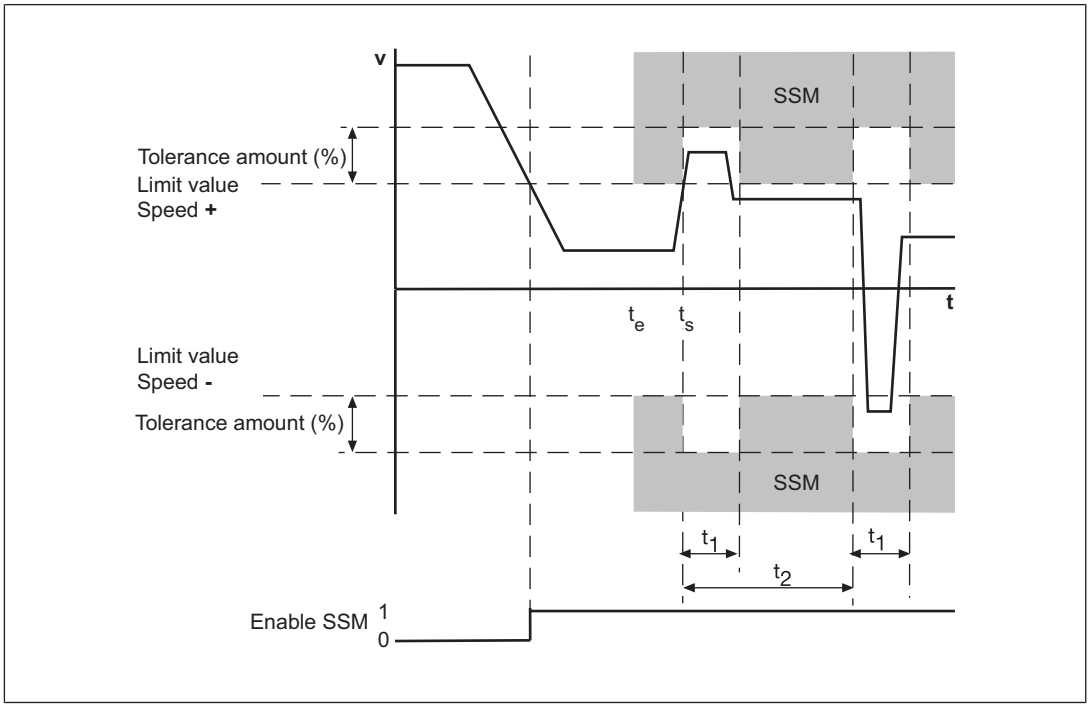

Legend:

- Enable SSM:
  - "1": Monitored limit value not exceeded
  - "0": Monitored limit value exceeded

- t_s: Speed v exceeds the limit value and activates the tolerance range (tolerance time, tolerance period, tolerance amount)
- t_1: Tolerance time
- t_2: Tolerance period
- Tolerance amount (%): Tolerance amount of limit value in both directions

Safe speed range monitoring

The ***Safe speed range monitoring*** function (SSR-M) monitors the current speed to ensure it stays within a maximum and minimum permitted limit value.

If the speed is outside the configured range, the output switches off. As soon as the speed returns within the configured range (plus hysteresis), the output switches back on.
If manual reset is configured, the output will not switch back on until the value is below the limit value (plus hysteresis) and the reset input is activated.

In PNOZmulti Configurator 2 areas can be configured per axis (with units < Version 2.0 only 1 area can be configured).

A tolerance range may also be set for the limit values used to monitor the speed range. This tolerance range modifies the set limit values. As a result, one-off or periodic overshoots that exceed the range limits can be tolerated.

The following values can be configured for the tolerance range:

- Tolerance time (t1), which takes into account the length of the overshoots (maximum time for which the limit value may be exceeded). It must not be possible that the sum of all the overshoots exceeds the tolerance time (t1) within a tolerance period (t2).
- Tolerance period (t2), which takes into account the oscillation period (minimum time that must elapse between one limit value overshoot and the next)
- Tolerance amount as a %, which takes into account the amplitude of the overshoots (maximum permitted percentage by which the limit value may be exceeded)

Motion monitoring modules
PNOZ m EF 2MM

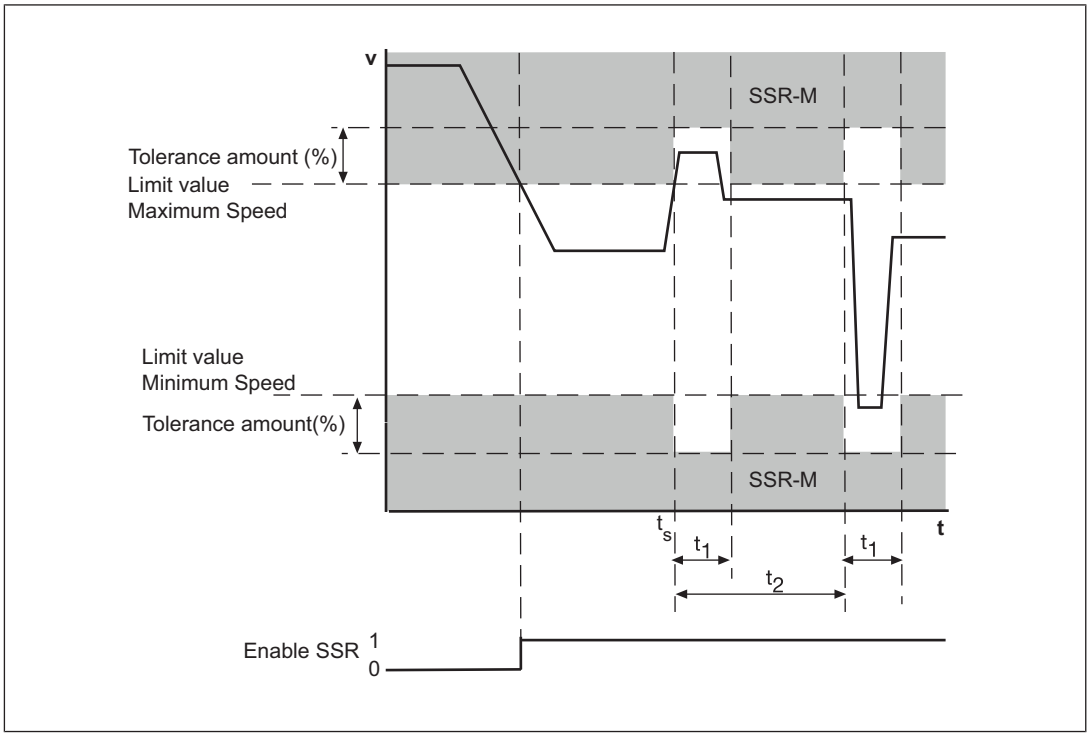

Legend:

- Enable SSR:
  - "1": Speed is within the configured range
  - "0": Speed is outside the configured range
- t_s: Speed v exceeds the limit value and activates the tolerance range (tolerance time, tolerance period, tolerance amount)
- t_1: Tolerance time
- t_2: Tolerance period
- Tolerance amount (%): Tolerance amount of the two limit values, maximum and minimum speed

Safe direction monitoring

The ***Safe direction monitoring*** function (SDI-M) monitors the direction of movement defined for the drive axis (positive or negative). Safe direction of movement monitoring is activated via the start input. It remains active until the configured tolerance is exceeded in the opposite direction. The function can be retriggered at any time by a rising edge at the start input. As a result, the current position can be used at any time as the start point for the monitoring function.

One SDI-M element can be configured per axis for each direction in the PNOZmulti Configurator.

Motion monitoring modules
PNOZ m EF 2MM

Please note:
This monitoring function cannot be used in conjunction with 2 proximity switches because position detection is not possible.

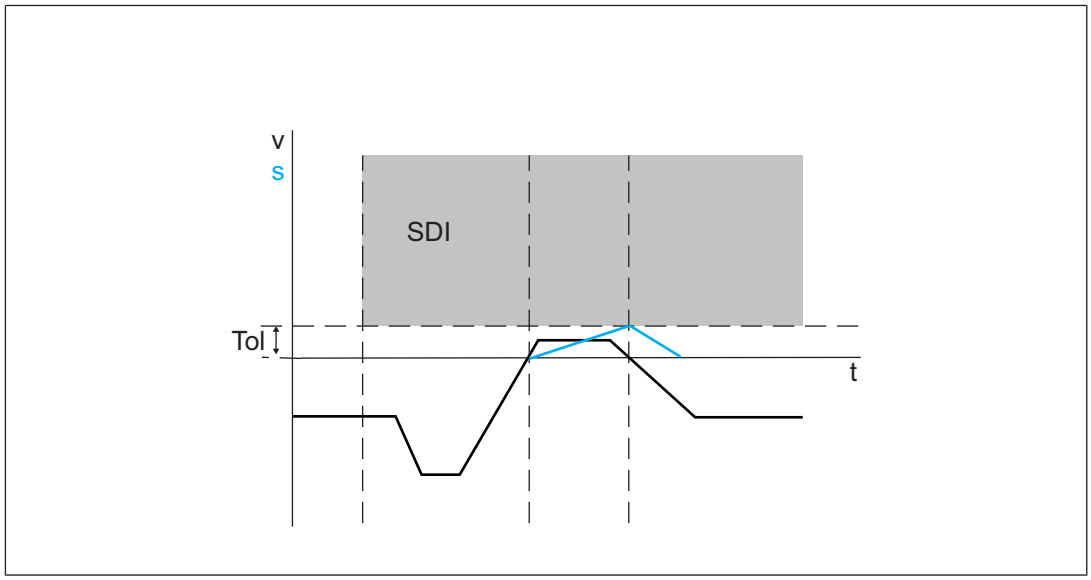

Safe operating stop monitoring

The ***Safe operating stop monitoring*** function (SOS-M) monitors whether the stop position remains within a configured tolerance window. Safe operating stop monitoring is activated within a rising edge at the start input. It remains active until the value is outside the tolerance band. The function can be retriggered at any time by a rising edge at the start input. As a result, the current position can be used at any time as the start point for the monitoring function.

In PNOZmulti Configurator 3 elements SOS-M can be configured per axis (with units < Version 2.0 only 1 element can be configured).

Please note:
This monitoring function cannot be used in conjunction with 2 proximity switches because position detection is not possible.

Motion monitoring modules
PNOZ m EF 2MM

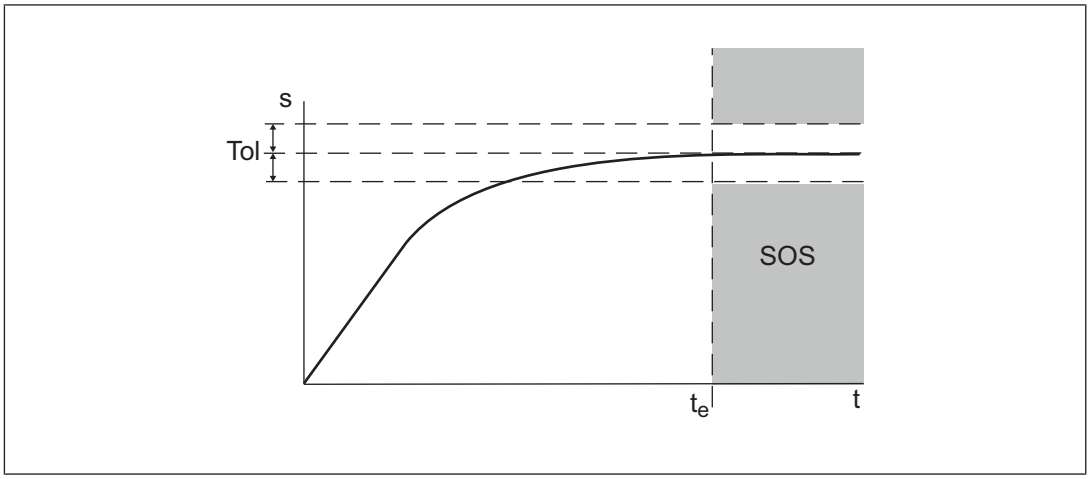

Legend:

- t_e: Activation of the monitoring function SOS

Safe stop 1 monitoring

The ***Safe stop 1 monitoring*** function (SS1-M) monitors whether the set delay time has elapsed (until controlled braking of the motor) or the standstill limit value for automatic STO is below the limit value.

- If the monitoring function SS1-M is triggered, the ***Braking ramp*** output is switched off. The drive controller's braking ramp is activated.
- After the set delay time has elapsed or the value for the automatic STO is below the limit value, the output ***ST*** switches off. The safety function ***Safe torque off*** (STO) is activated.

A maximum of 1 SS1-M element can be configured per axis in the PNOZmulti Configurator.

Sequence without standstill limit value for automatic STO:

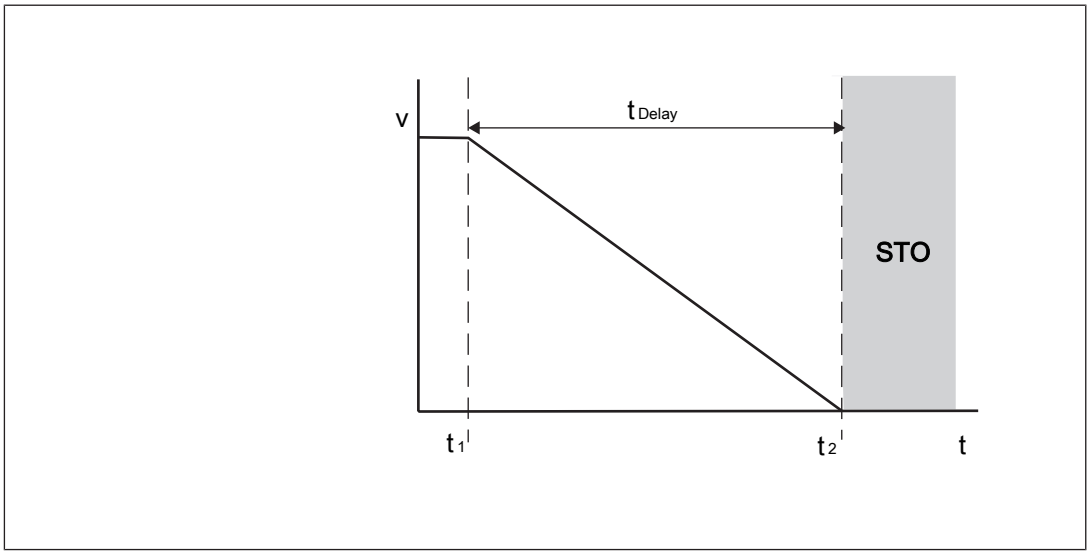

Motion monitoring modules
PNOZ m EF 2MM

Legend

t_1:	Monitoring function SS1-M is activated
t_2:	Delay time elapses, safety function "Safe torque off" (STO) is activated
t_{Delay}:	Set delay time for controlled braking of motor

Sequence with standstill limit value for automatic STO:

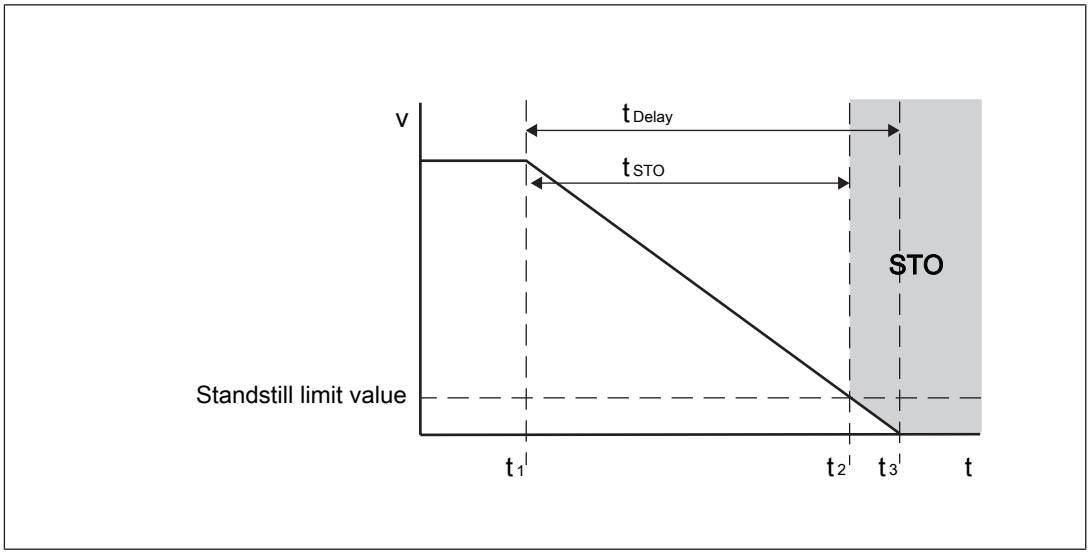

Legend

t_1:	Monitoring function SS1-M is activated
t_2:	Standstill limit value for automatic STO reached, safety function "Safe torque off" (STO) is activated
t_3:	Delay time elapses
t_{Delay}:	Set delay time for controlled braking of motor
t_{STO}:	Actual time from activation of monitoring function until STO is activated

Safe stop 2 monitoring

The ***Safe stop 2 monitoring*** function (SS2-M) monitors

- Whether the set delay time has expired (until controlled braking of the motor) or the standstill limit value for automatic SOS is below the limit value.

  and

- Whether the stop position ultimately remains within a configured tolerance window.

Reaction:

- If the monitoring function SS2-M is triggered, the "Braking ramp" output switches off. The drive controller's braking ramp is activated.
- If the set delay time has elapsed or the value for the automatic SOS is below the limit value, the stop position is monitored, the ***Position monitoring*** output switches on. If the stop position is outside the tolerance window, the ***Position monitoring*** and ***STO*** outputs switch off, the safety function ***Safe torque off*** (STO) is activated.

Motion monitoring modules
PNOZ m EF 2MM

A maximum of 1 SS2-M element can be configured per axis in the PNOZmulti Configurator.

Please note:
This monitoring function cannot be used in conjunction with 2 proximity switches because position detection is not possible.

Sequence without standstill limit value for automatic SOS:

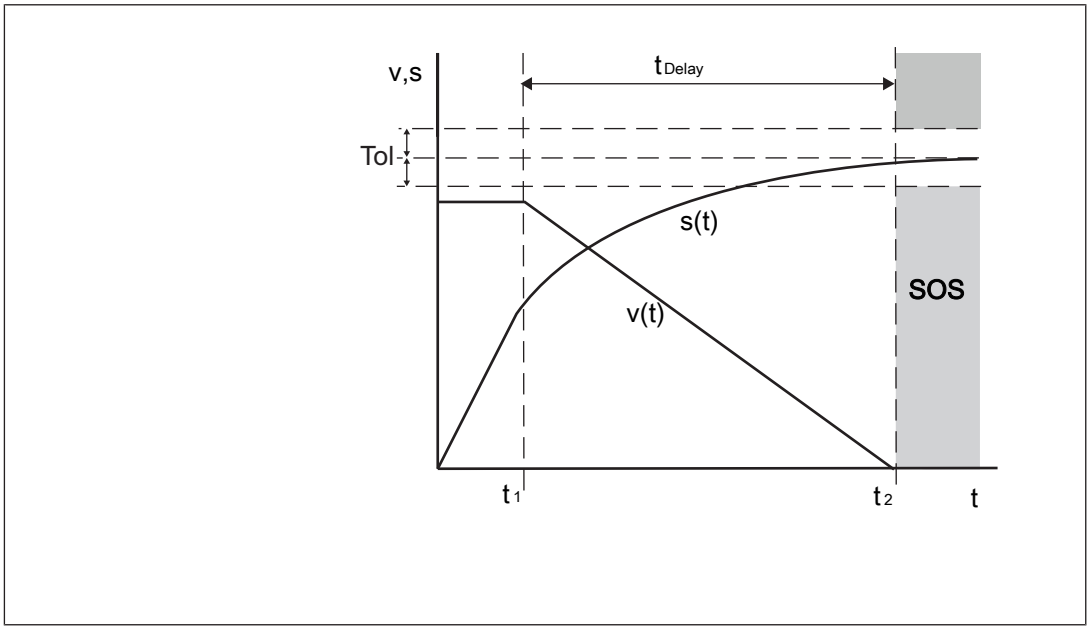

Legend

t_1:	Activation of the monitoring function SS2-M
t_2:	Delay time elapses, monitoring of stop position (SOS) is activated
t_{Delay}:	Set delay time for controlled braking of motor

Sequence with standstill limit value for automatic SOS:

Motion monitoring modules
PNOZ m EF 2MM

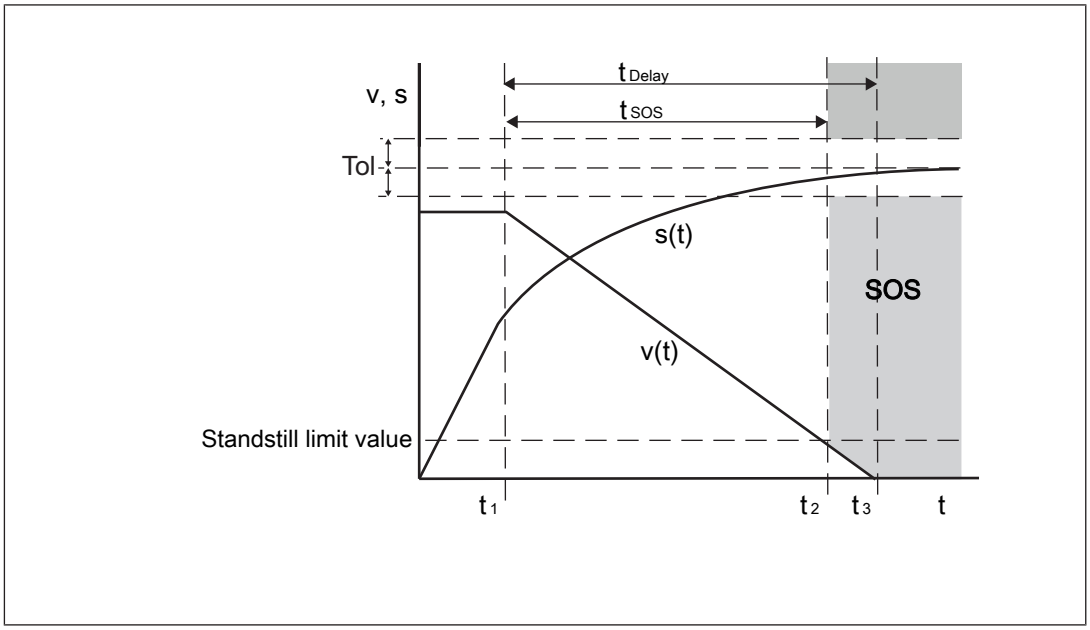

Legend

t_1:	Activation of the monitoring function SS2-M
t_2:	Standstill limit value for automatic SOS reached, monitoring of stop position (SOS) is activated
t_3:	Delay time elapses
t_{Delay}:	Set delay time for controlled braking of motor
t_{STO}:	Actual time from activation of monitoring function until STO is activated

Sequence when stop position is violated:

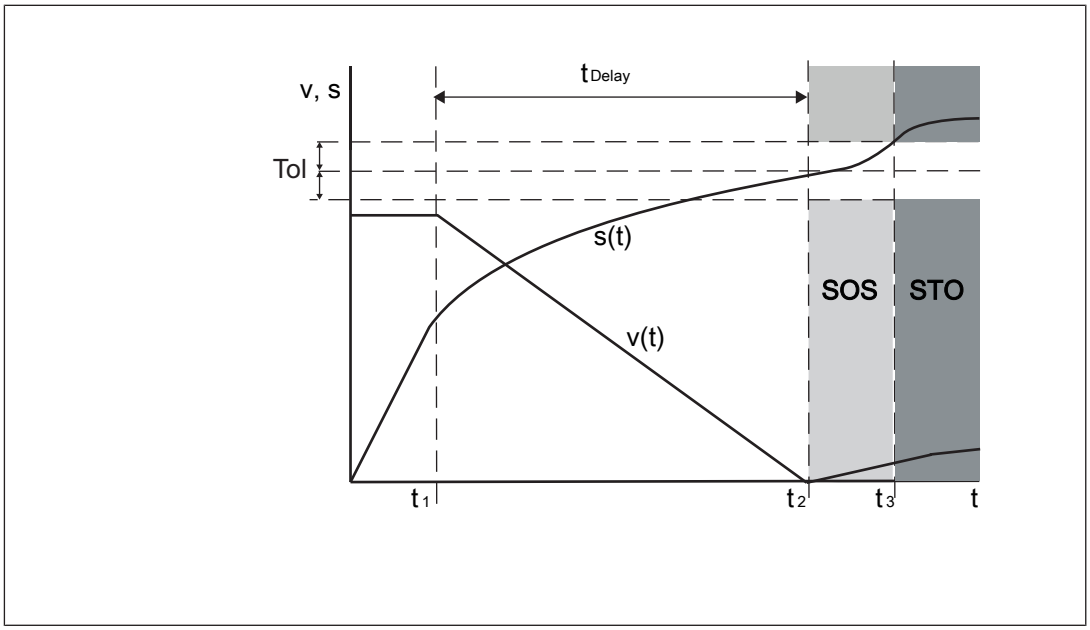

Motion monitoring modules
PNOZ m EF 2MM

Legend

t_1:	Activation of the monitoring function SS2-M
t_2:	Standstill limit value for automatic SOS reached, monitoring of stop position (SOS) is activated
t_3:	Stop position outside of tolerance window, safety function "Safe torque off" (STO) is activated
t_{Delay}:	Set delay time for controlled braking of motor

Safely limited acceleration monitoring (SLA-M)

The monitoring function ***Safely limited acceleration monitoring*** monitors the speed change per time unit.
Both the acceleration and the deceleration can be monitored.
Monitoring checks whether the acceleration or deceleration exceeds or falls below a certain limit value.

4 SLA-M elements can be configured per axis in the PNOZmulti Configurator.

The monitoring function ***Safely limited acceleration monitoring*** is activated with a rising edge at the start input. The trigger detection phase starts with a falling edge at the start input. In this process the current speed is taken as the start speed.

Monitoring of safely limited acceleration starts,

- when the trigger threshold is passed, that is, when the start speed changes by the configured percentage (V1).
- When monitoring starts within the maximum trigger time (t1).

When monitoring is started, the set acceleration is calculated as a straight line V_{Set}. A tolerance band $V_{Tolerance}$ is calculated from the Tolerance and V_{Edge} parameters. If the actual speed V_{Actual} leaves the tolerance band, the output ***Enable SLA*** switches off.

Monitoring is ended,

- When monitoring is reset by a rising edge at the start input,
- When a range has been violated and it is no longer possible to return within the valid range,
- When the target speed is passed.

Motion monitoring modules
PNOZ m EF 2MM

Example: Monitoring for too fast acceleration

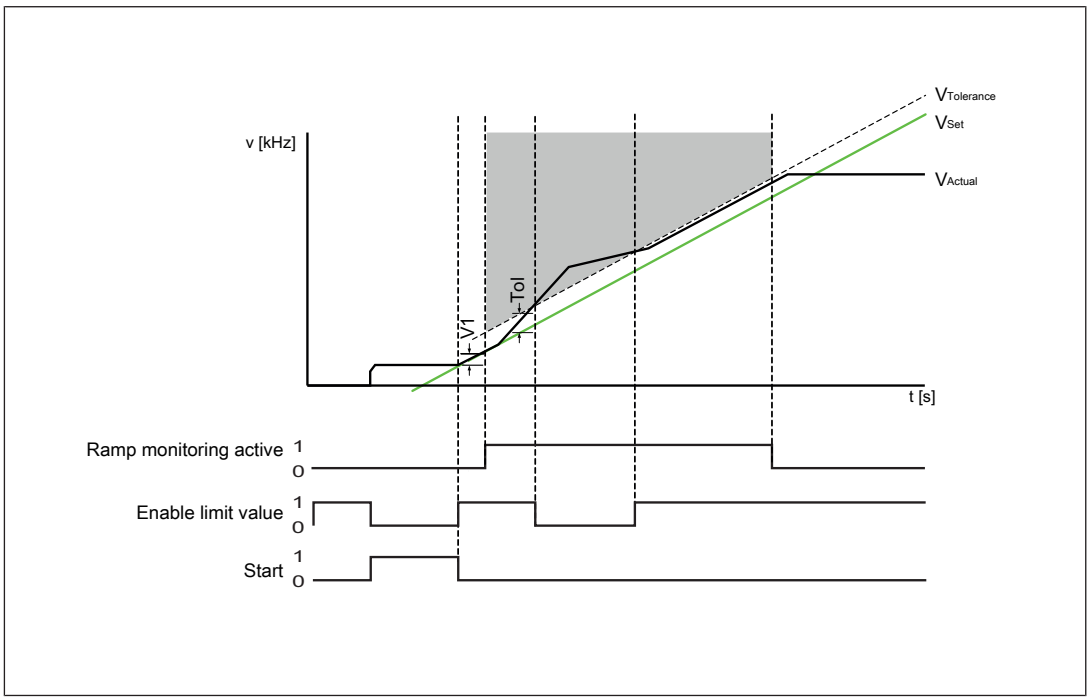

Safely limited acceleration range monitoring (SAR-M)

The monitoring function ***Safely limited acceleration monitoring*** monitors the speed change per time unit.
In contrast to the monitoring function SLA-M, safely limited acceleration range monitoring monitors not only a limit value but also the upper and lower limit value simultaneously. Both the acceleration and the deceleration can be monitored.

Otherwise the functionality is the same as the monitoring function SLA-M.

4 SAR-M elements can be configured per axis in the PNOZmulti Configurator.

Motion monitoring modules
PNOZ m EF 2MM

Example: Monitoring for too fast and too slow acceleration

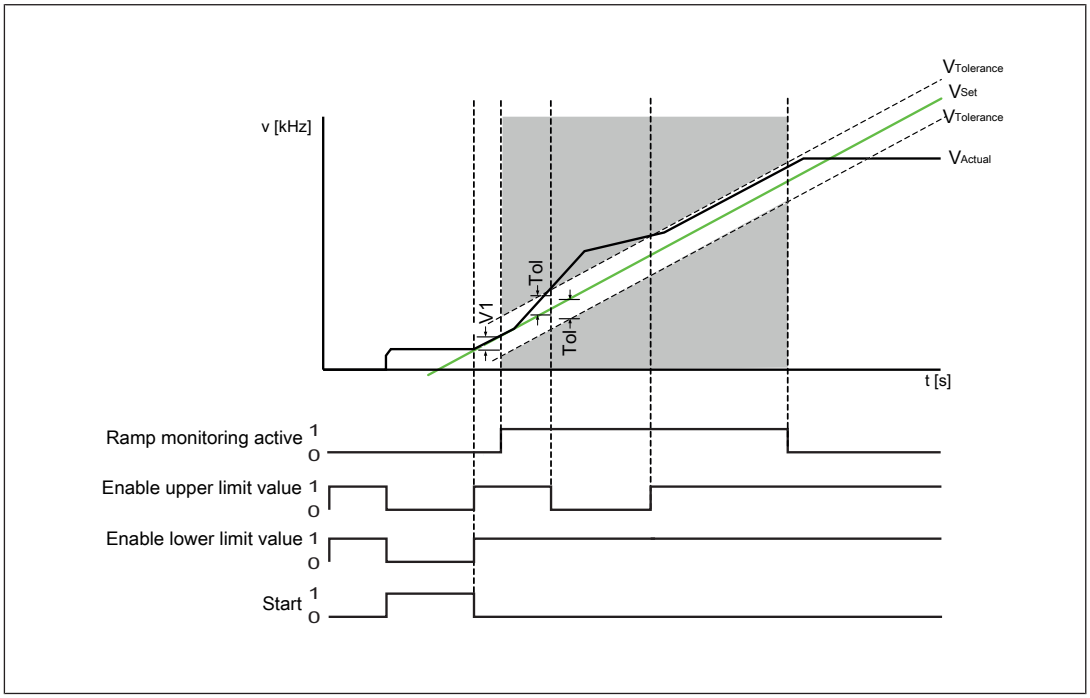

Central motion monitoring functions

These functions apply centrally for all the monitoring functions.

Hysteresis

A central hysteresis can be configured for the monitoring functions. This prevents the outputs from bouncing if there are fluctuations around the response value. The hysteresis takes effect when the output is switched on.

Validation cut-off frequency

As implausible sensor signals may arise due to jitter on the sensors around the stop position, a central validation cut-off frequency must be configured for sensor types with proximity switches in the PNOZmulti Configurator (edge jitter is caused by the position control of the drive frequency converter or by external interference signals).

If the value of the validation cut-off frequency falls below the configured value, the feasibility check of the sensors will no longer be run.

Advanced Settings tab

A tolerance time can be configured for tracks AB, Z and S respectively.

The tolerance time influences the sensitivity towards invalid signal levels (e.g. in the event of EMC interference).

The greater the configured tolerance time, the less sensitive the system will be towards invalid signal levels.

The tolerance time can be deactivated for individual tracks by setting 0 ms.

System reaction time

Calculation of the maximum reaction time between an input switching off and a linked output in the system switching off is described in the document "PNOZmulti System Expansion [30]".

Proximity switch

- Proximity switches can be used with a pnp or npn output.
- The proximity switches must be fitted so that at least one is always activated. In other words, the proximity switches must be fitted so that the recorded signals always overlap.
- The cable used to connect the proximity switches must be shielded (see connection diagrams in the chapter entitled "EMC-compliant wiring").
- A DC voltage in the range of 0 - 30 V can be monitored via track S. It should be used to monitor the supply voltage of the proximity switches.

Proximity switch assembly:

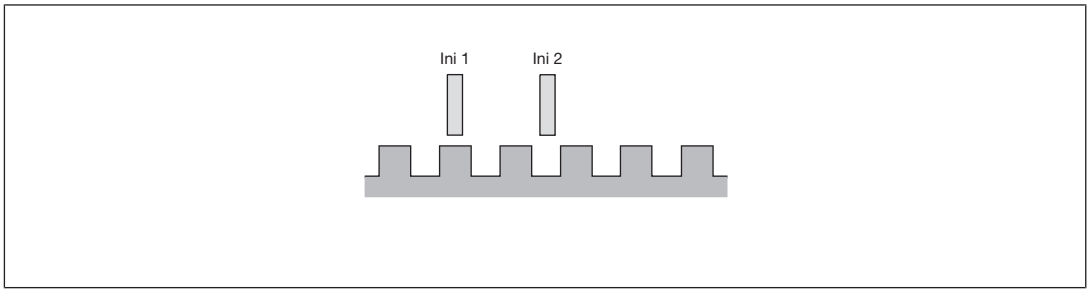

Signal characteristics:

Proximity switch combinations	Signal image in an energised state
PNP / PNP	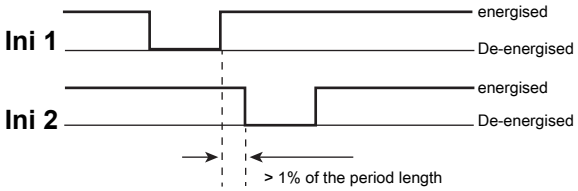
NPN / NPN	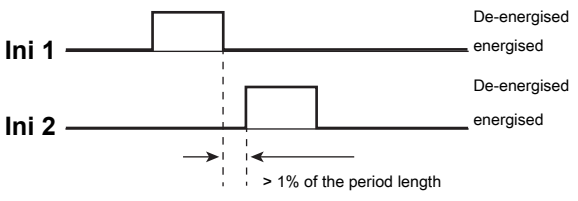

Motion monitoring modules
PNOZ m EF 2MM

Proximity switch combinations	Signal image in an energised state
NPN / PNP	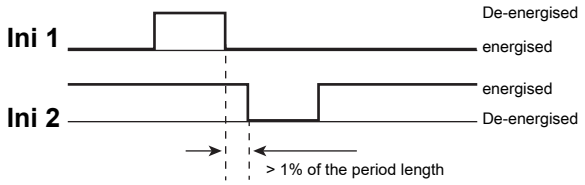
PNP / NPN	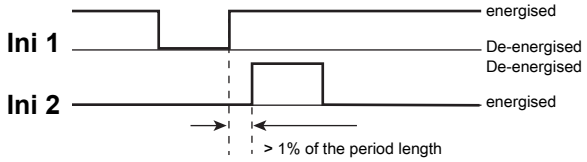

- For a full configuration, the maximum frequency of the sensors you are using must be entered in the PNOZmulti Configurator (see sensor's data sheet).

Special features for proximity switches with reduced diagnostics

- A: pnp, B: pnp
- It is permitted that both proximity switches are energised simultaneously.
- The safety level is reduced.
- The cables for connecting the proximity switches must be laid separately.
- The supply voltage of the proximity switches must be monitored (e.g. via track S).

Encoder

- The following encoders can be used:
  - TTL, HTL (single-ended or differential signals)
  - Sin/Cos 1 Vss
  - Hiperface®
- The encoders can be connected with or without Z index (0 index).
- The cables used to connect the encoders must be shielded (see connection diagrams in the chapter entitled "EMC-compliant wiring").
- A proximity switch can also be connected to track Z to monitor for broken shearpins.
  Please note:
  Broken shearpin monitoring only becomes active when
  - The minimum speed is exceeded

    and
  - The tolerance for detecting feasibility errors has elapsed.

The minimum speed and tolerance depend on the ratio of the frequency on tracks AB "f_{AB}" to the frequency on track Z "f_Z" in your configuration (see PNOZmulti Configurator ***Motion Monitor Element***, ***Calculated Ratio AB/Z***).
Minimum speed:

– Calculated ratio AB/Z ≥ 1.0
  f_Z = 10 mHz or f_{AB} = (f_{AB}/f_Z) *x* 10 mHz
– when f_{AB}/f_Z ***Ratio*** < 1.0
  f_{AB} = 10 mHz or f_Z = 10 mHz/(f_{AB}/f_Z)

Tolerance for detecting feasibility errors:

– when f_{AB}/f_Z ***Ratio*** ≥ 1.0
  7.5 Z pulses or 7.5 x (f_{AB}/f_Z) AB pulses
– when f_{AB}/f_Z ***Ratio <*** 1.0
  4.5 AB pulses or 4.5 x (f_{AB}/f_Z) Z pulses

- With Hiperface encoders, the Sin- Cos track is recorded and monitored via an adapter (see Adapters for encoders [📖 892]).
- Track S can be used:
  – To connect an encoder's error output.
  – To monitor voltages between 0 V and 30 V for a permitted upper and lower limit. For example, the encoder's supply voltage can be monitored.
- The maximum frequency of the used encoders must be entered for a complete configuration.
- Pay attention to the values in the technical details.

Output signals

Output signals TTL, HTL

Single ended

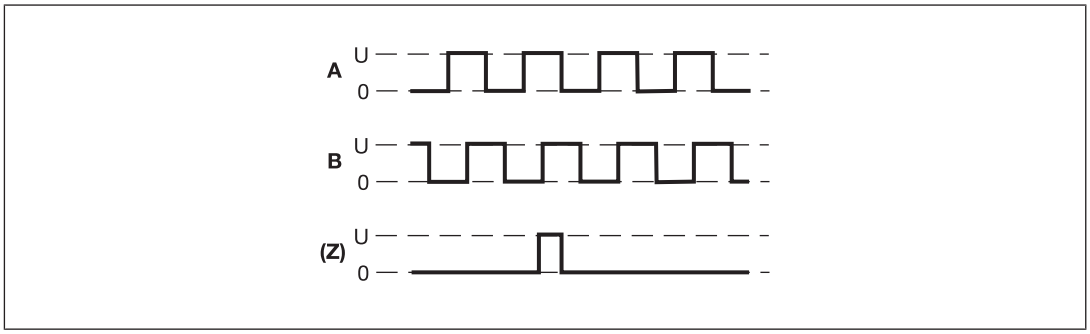

Motion monitoring modules
PNOZ m EF 2MM

Differential

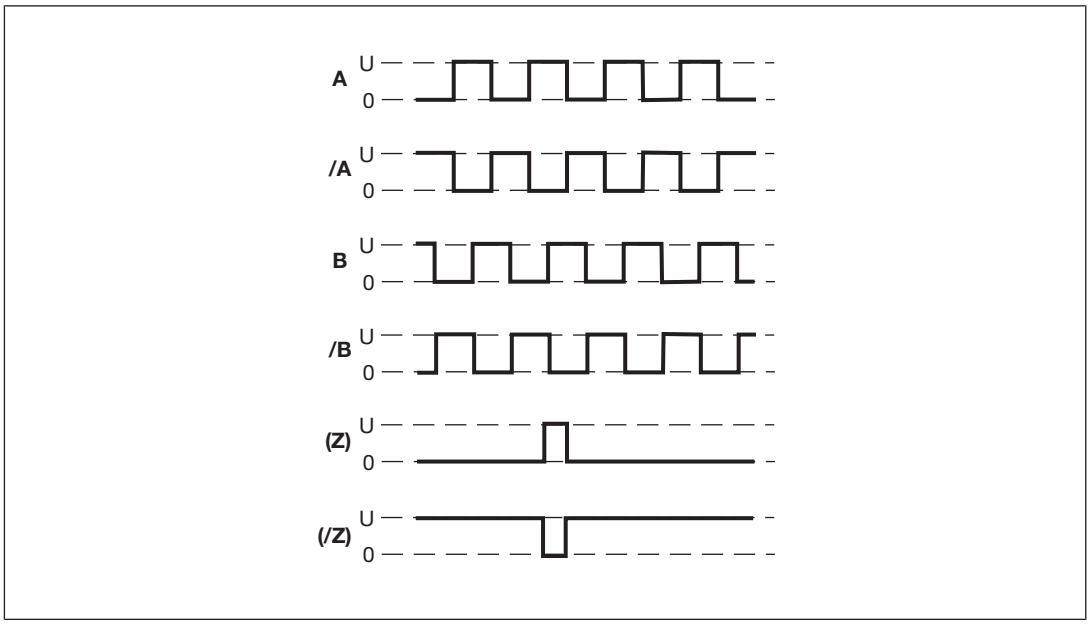

Output signals Sin/Cos (1 Vss)

Single ended with reference track (e.g. Hiperface ®)

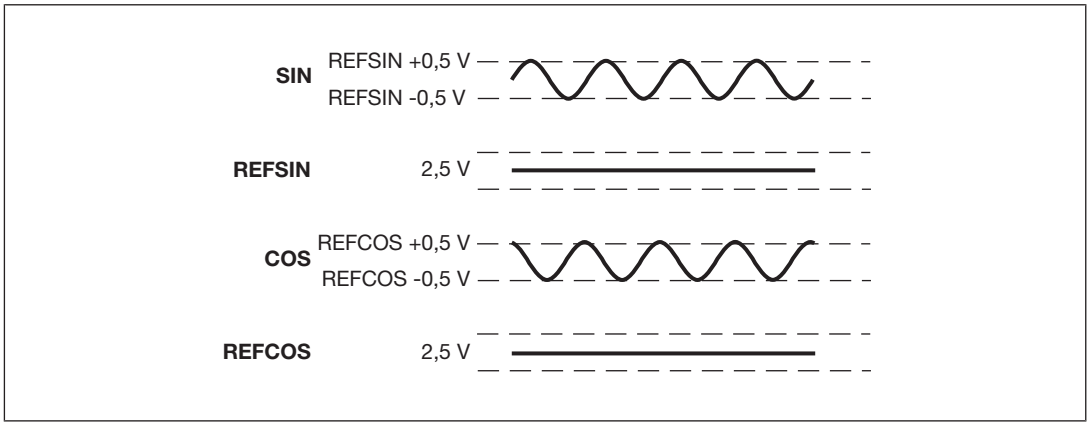

Motion monitoring modules
PNOZ m EF 2MM

Differential with/without Z index (e.g. Heidenhain 1 Vss)

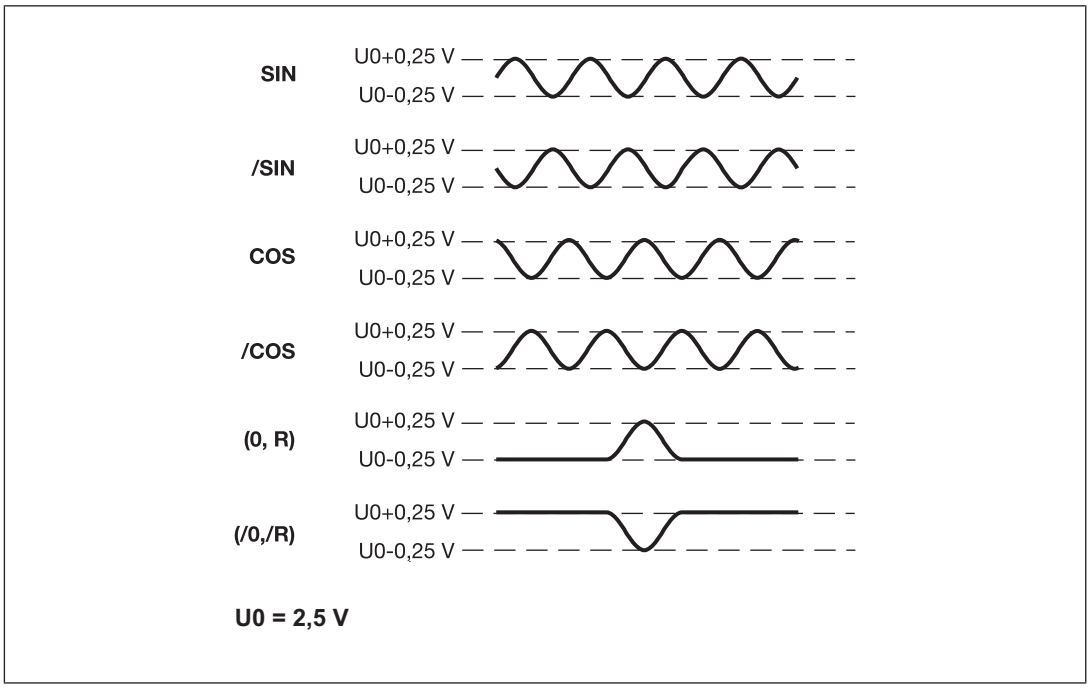

Adapters for encoders

The adapter records the data between the encoder and the drive and makes it available to the PNOZ m EF 2MM via the Mini-IO socket.

Pilz supplies complete adapters as well as ready-made cable with Mini-IO connector, which can be used when making your own adapter. The range of products in this area is constantly being expanded. Please contact us about the range of adapters that is currently available.

Motion monitoring modules
PNOZ m EF 2MM

Installation

Dimensions in mm

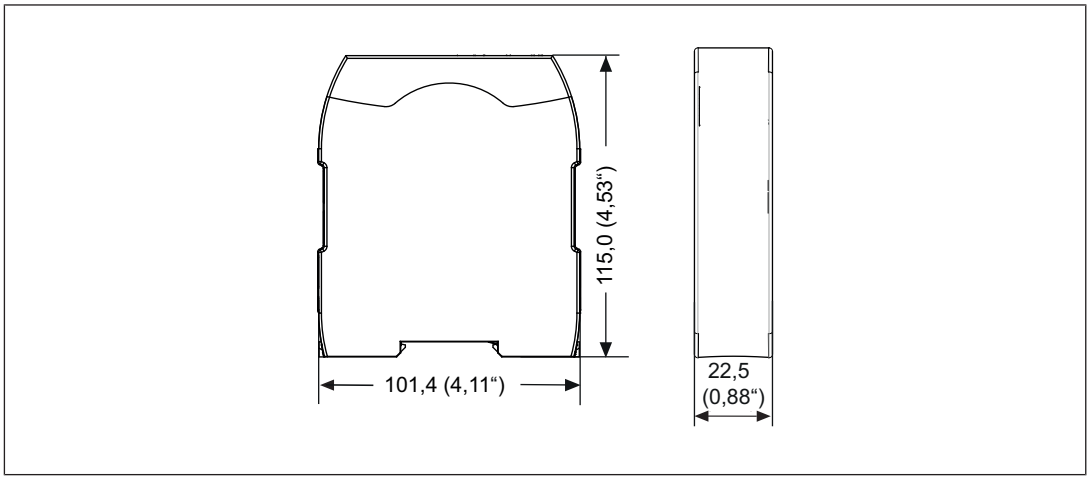

Commissioning

Wiring

The wiring is defined in the circuit diagram of the PNOZmulti Configurator.

Please note:

- Information given in the Technical details [📖 905] must be followed.
- The position of the expansion module is specified in the Hardware configuration of the PNOZmulti Configurator.
- Use copper wiring with a temperature stability of 75 °C.
- The power supplies for the safety system and sensors must comply with the regulations for low voltages with safe isolation.
- The cable used to connect the encoders and proximity switches must be shielded (see connection diagrams in the chapter entitled "EMC-compliant wiring").
- The shield may only be connected to earth at a single point.
- Earth loops should be avoided.
- If possible, the connections for the various earth potentials (GND, A2) should not be connected on the PNOZ m EF 2MM but should be connected directly to the GNDs on the connected units. otherwise noise susceptibility may be increased significantly (conductor loops are not permitted).

Motion monitoring modules
PNOZ m EF 2MM

Pin assignment of Mini-IO socket

Mini-IO socket 8-pole	PIN	Track
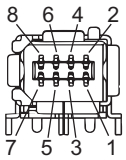	1	S
	2	GND
	3	Z
	4	A
	5	/A
	6	/Z
	7	B
	8	/B

Motion monitoring modules
PNOZ m EF 2MM

Connection of proximity switches

The following proximity switch combinations can be connected:

- A: pnp, B: pnp
- A: npn, B: npn
- A: pnp, B: npn
- A: npn, B: pnp

When connecting proximity switches please note:

- Proximity switches can be connected to
  - terminals A12, B12, GND for axis 1 and A22, B22, GND for axis 2
    or
  - tracks A, B and GND of the Mini-IO socket (X12 for axis 1, X22 for axis 2).
- Track S (S12, S22) should be used to monitor the supply voltage (see drawing). A permitted voltage range can be entered in the menu.
- Connect the proximity switch to 24 VDC of the power supply.
- When connecting the proximity switches, please refer to the chapter entitled "EMC-compliant wiring".
- Invalid signals may occur with long cable lengths. In this case we recommend that you connect a resistor between the signal lines, as shown in the diagrams.
- Connection of the proximity switches may only be performed in three-wire technology and not in two-wire technology.
- Special features for proximity switches with reduced diagnostics:
  - A: pnp, B: pnp
  - It is permitted that both proximity switches are energised simultaneously.
  - The safety level is reduced.
  - The cables for connecting the proximity switches must be laid separately.
  - The supply voltage of the proximity switches must be monitored (e.g. via track S).

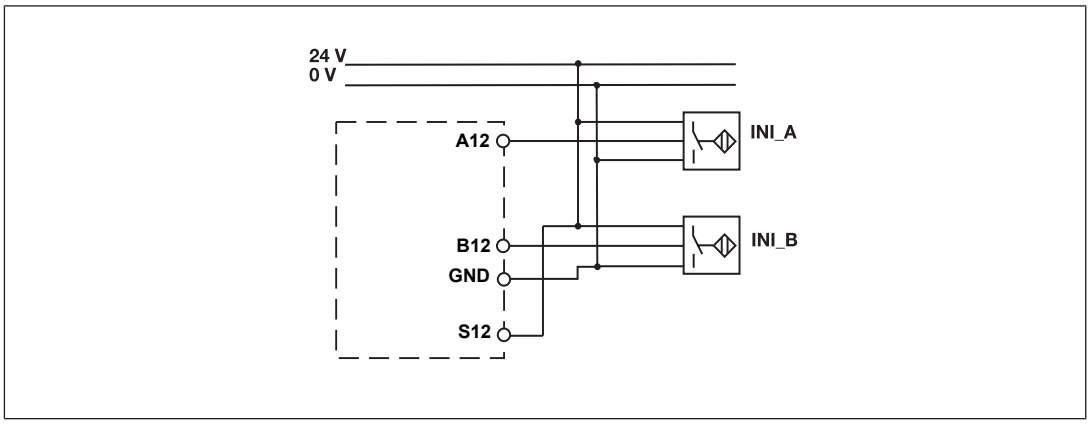

pnp proximity switch with resistor R = 10 kOhm

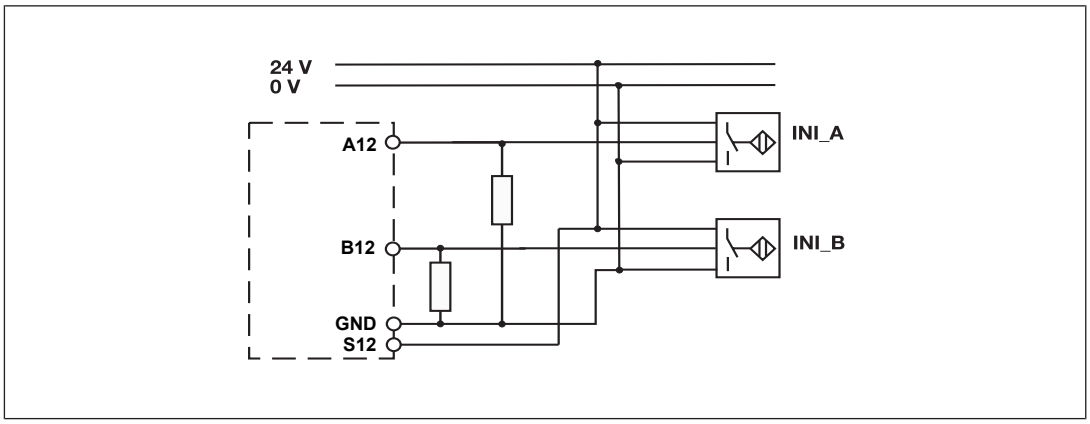

npn proximity switch with resistor R = 47 kOhm

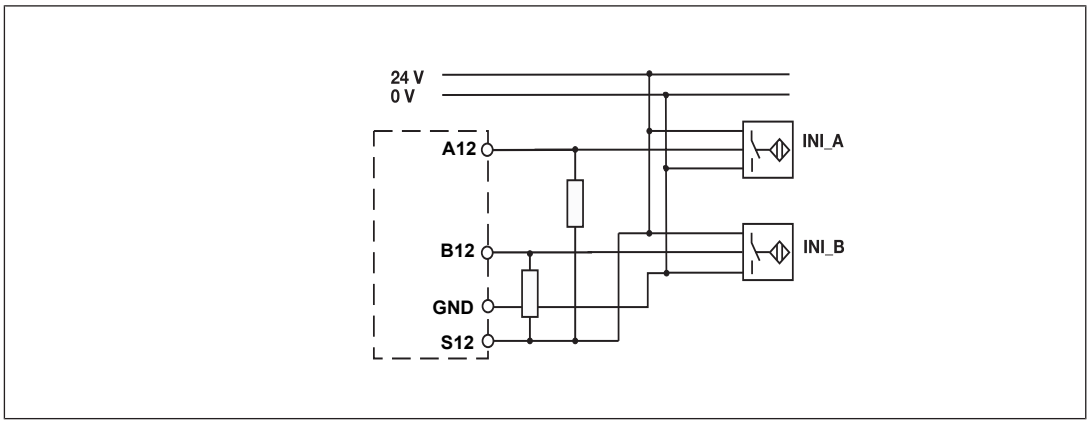

Connection of an encoder

Proceed as follows when connecting the encoder:

- The encoder can be connected via an adapter (e.g. MM A Mini-IO-CAB99) or directly to the PNOZ m EF 2MM.
- Use only shielded cables for all connections. Please refer to the chapter entitled "EMC-compliant wiring".
- Always connect GND on the encoder to GND on the Mini-IO connector.
- If the encoder signals are not terminated with 120 Ohm in the frequency converter, the encoder signals must be terminated with Z_0 = 120 Ohm between A and /A, B and /B, Z and /Z.
- Please refer to the information provided by the encoder manufacturer with regard to the recommended max. cable length when taking into consideration
  - Output frequency
  - Supply voltage
  - Operating temperature

– Existing interference

When calculating the maximum cable length, remember that the length of the adapter cable must also be taken into account.

Connect encoder

Encoder types:

- TTL single ended
- HTL single ended

Please note:

- Tracks/A, /B, Z and /Z must remain free

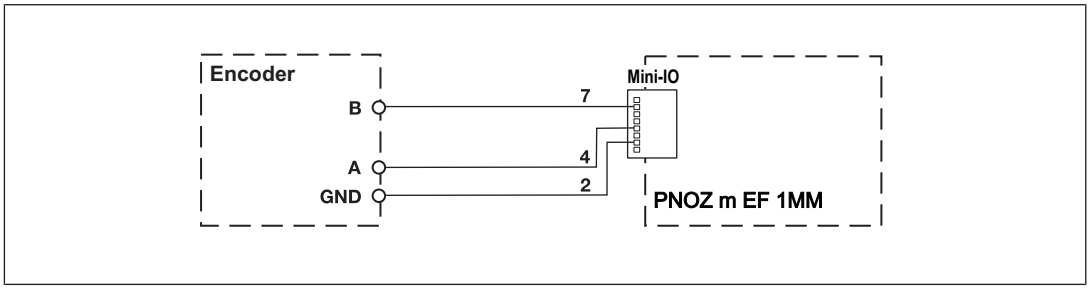

Encoder types:

- TTL Differential
- HTL differential
- sin/cos 1 Vss
- Hiperface

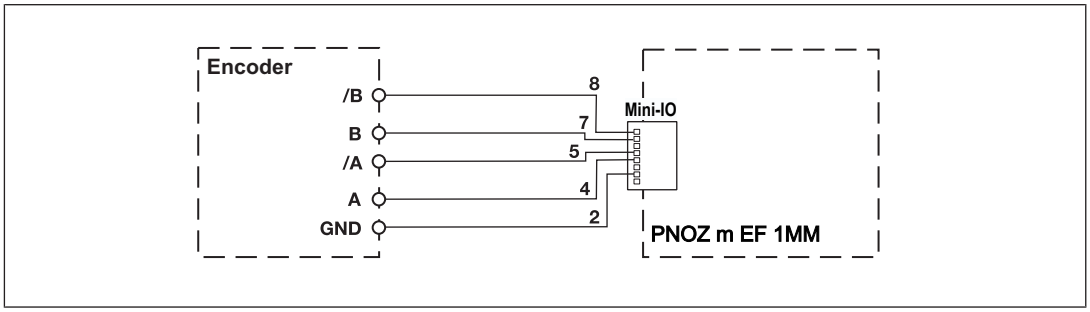

Connect encoder with Z index

Encoder types:

- TTL single ended Z Index
- HTL single ended Z Index

Please note:

- Tracks /A, /B and /Z must remain free
- When using the encoder type sin/cos 1 Vss Z Index, the length of the encoder cable may be max. 30 m.

Motion monitoring modules
PNOZ m EF 2MM

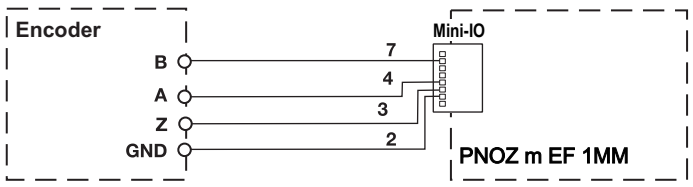

Encoder types:

- TTL differential + Z Index
- HTL differential + Z Index
- sin/cos 1 Vss Z Index

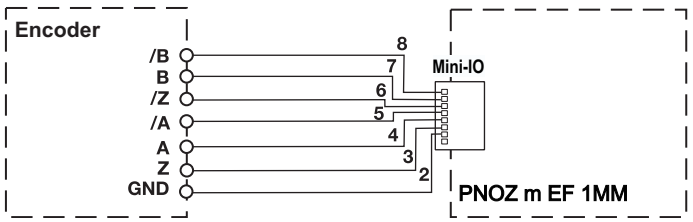

Connect encoder via an adapter

The adapter (see Accessories [📖 908]) is connected between the encoder and the drive. The output on the adapter is connected to the Mini-IO socket on the PNOZ m EF 2MM.

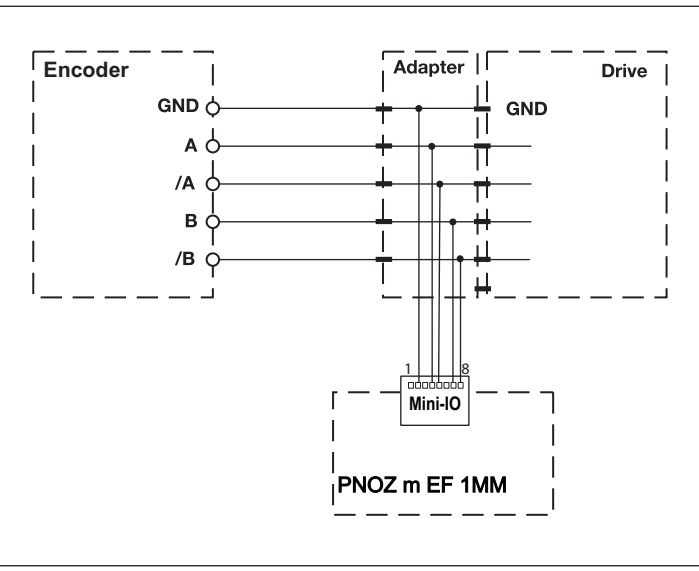

Motion monitoring modules
PNOZ m EF 2MM

Connection of proximity switch and encoder

When connecting the encoders and proximity switches, please refer to the chapter entitled "EMC-compliant wiring".

Sensor types:

- Configuration: HTL single Z Freq. Ini pnp
  - HTL single ended (A,B) + Ini pnp (Z)
  - HTL single ended (A,B) + HTL differential (A as Z)
  - HTL single ended (A,B) + HTL single ended (A as Z)
- Configuration: TTL single Z Freq. Ini pnp
  - TTL single ended (A,B) + Ini pnp (Z)
  - TTL single ended (A,B) + HTL differential (A as Z)
  - TTL single ended (A,B) + HTL single ended (A as Z)

Please note:
Tracks /A, /B and /Z must remain free.

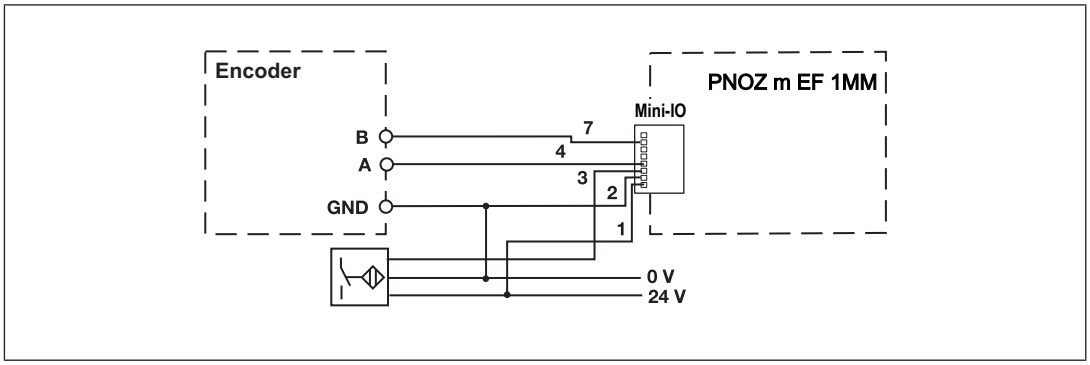

Sensor types:

- Configuration: TTL differential Z Freq. Ini pnp
  - TTL differential (A,/A,B,/B) + Ini pnp (Z)
  - TTL differential (A,/A,B,/B) + HTL differential (A as Z)
  - TTL differential (A,/A,B,/B) + HTL single ended (A as Z)
- Configuration: HTL differential Z Freq. Ini pnp
  - HTL differential (A,/A,B,/B) + Ini pnp (Z)
  - HTL differential (A,/A,B,/B) + HTL differential (A as Z)
  - HTL differential (A,/A,B,/B) + HTL single ended (A as Z)
- Configuration: sin/cos 1 Vss Z Freq. Ini pnp
  - sin/cos 1 Vss (A,/A,B,/B) + Ini pnp (Z)
  - sin/cos 1 Vss (A,/A,B,/B) + HTL differential (A as Z)
  - sin/cos 1 Vss (A,/A,B,/B) + HTL single ended (A as Z)

Motion monitoring modules
PNOZ m EF 2MM

- Configuration: Hiperface Z Freq. Ini pnp
  - Hiperface (A,/A,B,/B) + Ini pnp (Z)
  - Hiperface (A,/A,B,/B) + HTL differential (A as Z)
  - Hiperface (A,/A,B,/B) + HTL single ended (A as Z)

Please note:
Track /Z must remain free!!

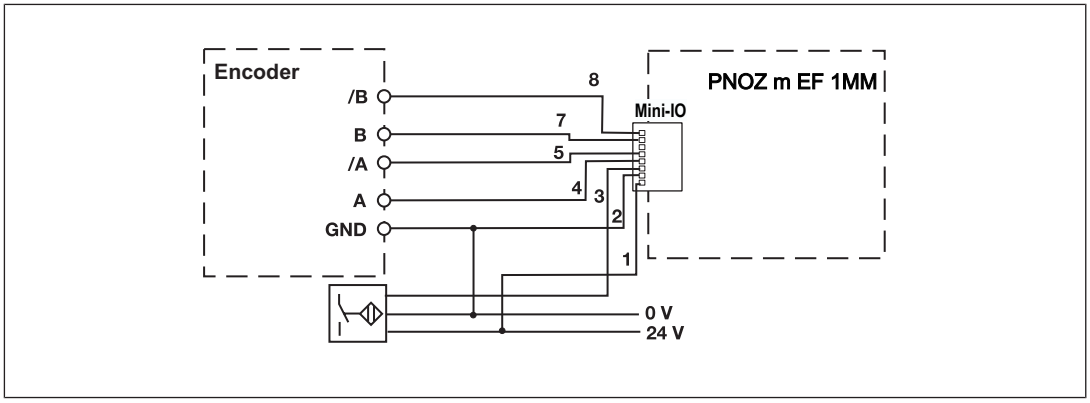

Motion monitoring modules
PNOZ m EF 2MM

EMC-compliant wiring

EMC-compliant wiring for connecting an encoder

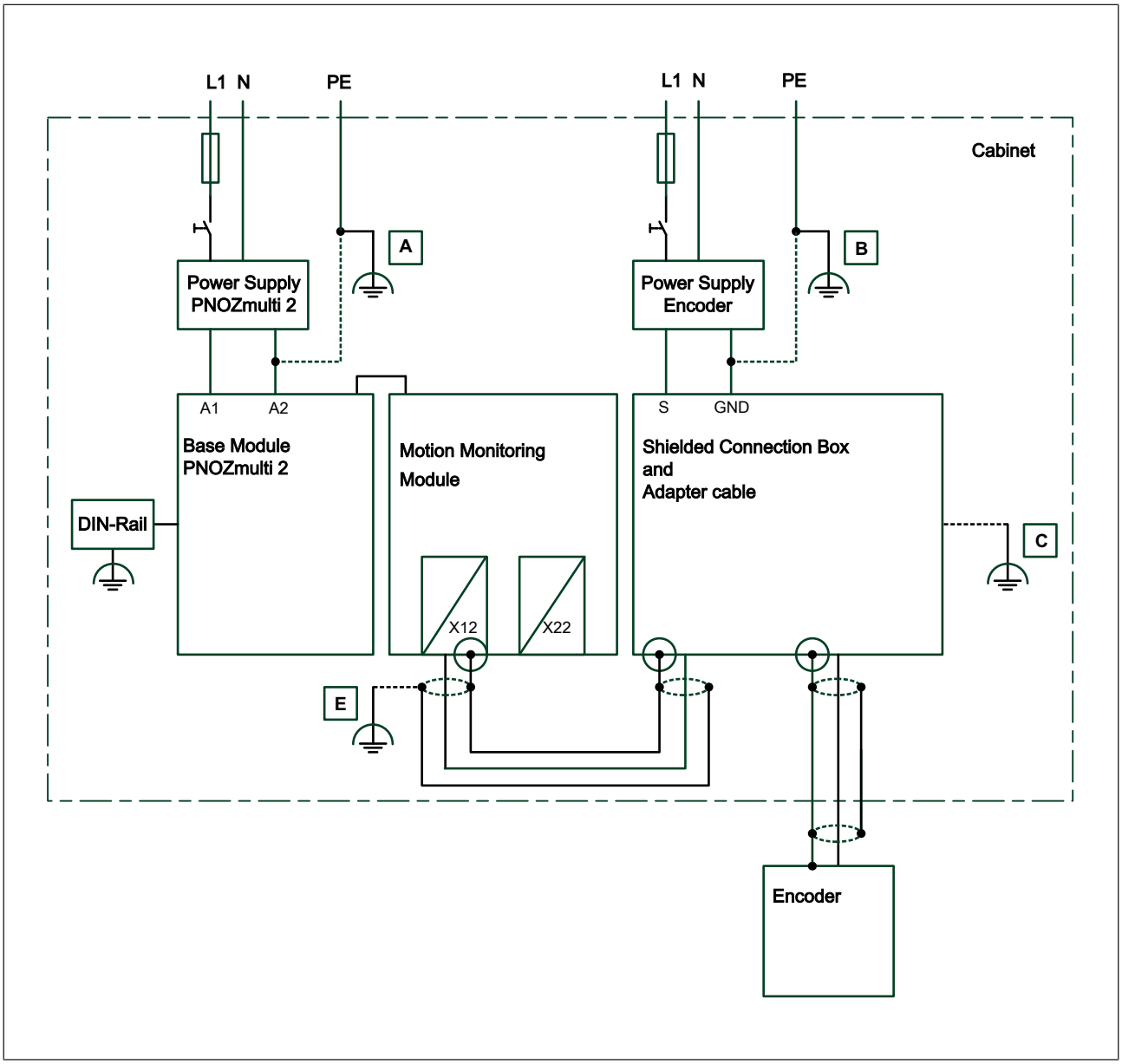

To avoid EMC interference we recommend that the shield on the sensor cable is connected to earth at **C** or **E**. However, depending on the application, it may be helpful to establish the connection to functional earth at another point (in this case **A** or **B**).
Conductor loops outside the shield must be avoided.
If a shielded junction box is not used, the shield must run continuously from the sensor to the evaluation device.

Motion monitoring modules
PNOZ m EF 2MM

EMC-compliant wiring for connecting an encoder with drive

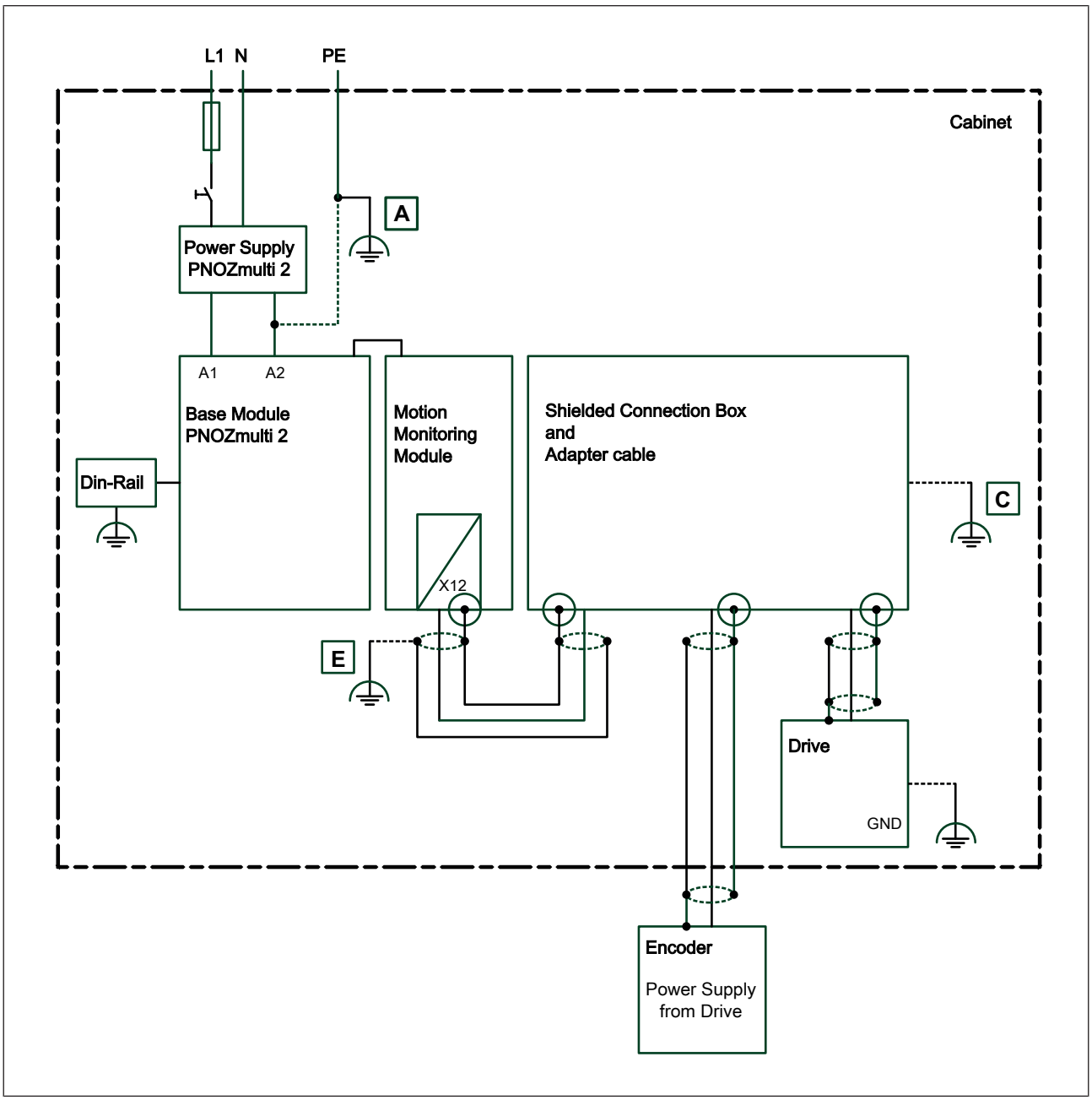

To avoid EMC interference we recommend that the shield on the sensor cable is connected to earth at **C** or **E**. However, depending on the application, it may be helpful to establish the connection to functional earth at another point (in this case **A**).
Conductor loops outside the shield must be avoided.
If a shielded junction box is not used, the shield must run continuously from the sensor to the evaluation device.

Motion monitoring modules
PNOZ m EF 2MM

EMC-compliant wiring for connecting 2 proximity switches

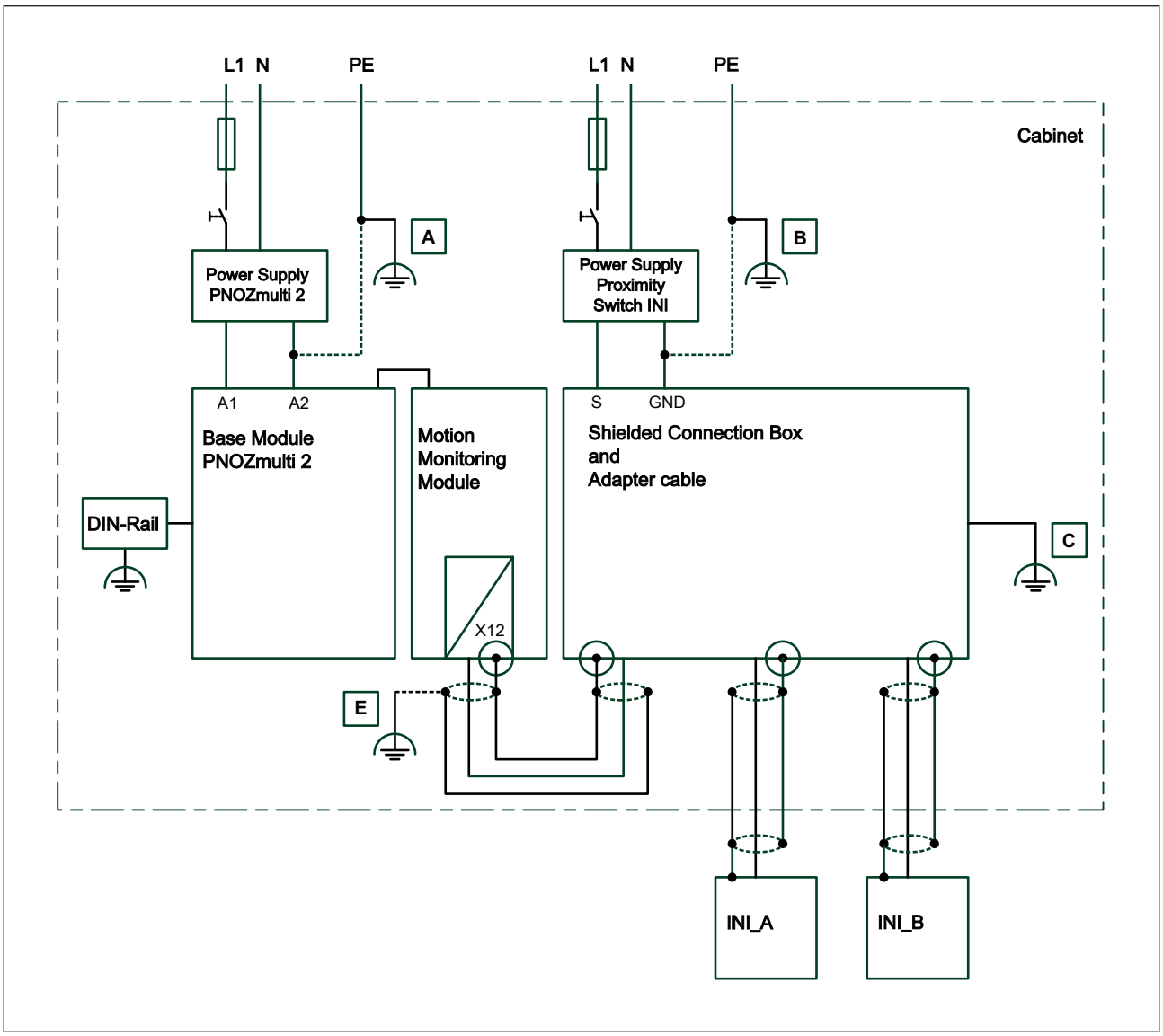

To avoid EMC interference we recommend that the shield on the sensor cable is connected to earth at **C** or **E**. However, depending on the application, it may be helpful to establish the connection to functional earth at another point (in this case **A** or **B**).
Conductor loops outside the shield must be avoided.
If a shielded junction box is not used, the shield must run continuously from the sensor to the evaluation device.

Motion monitoring modules
PNOZ m EF 2MM

EMC-compliant wiring for connecting an encoder and a proximity switch

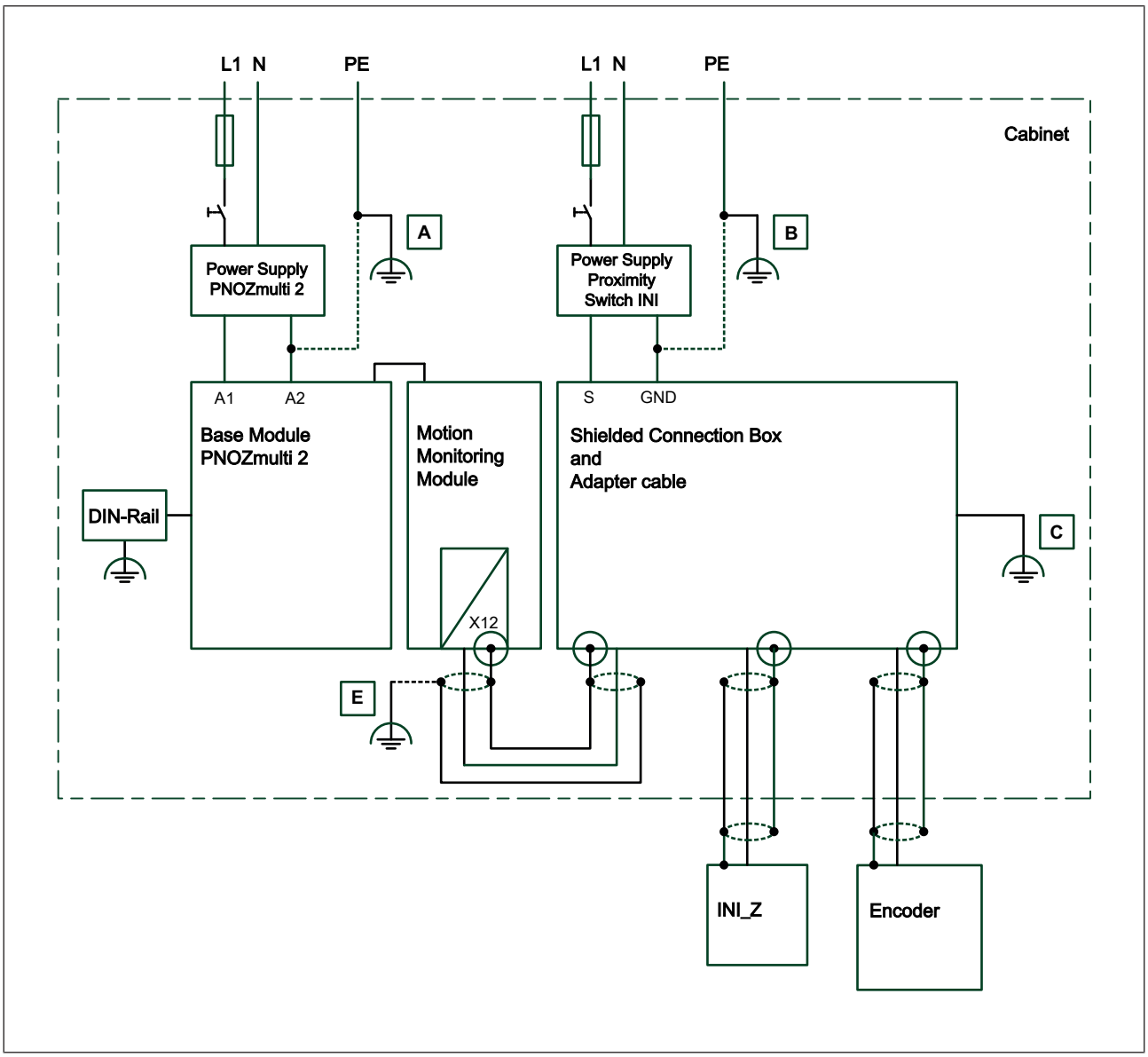

To avoid EMC interference we recommend that the shield on the sensor cable is connected to earth at **C** or **E**. However, depending on the application, it may be helpful to establish the connection to functional earth at another point (in this case **A** or **B**).
Conductor loops outside the shield must be avoided.
If a shielded junction box is not used, the shield must run continuously from the sensor to the evaluation device.

Motion monitoring modules
PNOZ m EF 2MM

Technical details

General	
Certifications	**CE, EAC (Eurasian), KOSHA, TÜV, cULus Listed**
Application range	**Failsafe**
Module's device code	**00E4h**
Electrical data	
Supply voltage	
for	**Module supply**
internal	**Via base unit**
Voltage	**24 V**
Kind	**DC**
Current consumption	**150 mA**
Power consumption	**3,5 W**
Max. power dissipation of module	**3,9 W**
Status indicator	**LED**
Proximity switch input	
Number of inputs	**4**
Input signal level	
Signal level at "1"	**11 - 30 V**
Signal level at "0"	**0,0 - 3,0 V**
Input resistance	**22 kOhm**
Input's frequency range	**0 - 5 kHz**
Configurable monitoring frequency	
Without hysteresis	**0,1 Hz - 5 kHz**
Incremental encoder input	
Number of inputs	**2**
Connection type	**Mini-IO female connector, 8-pin**
Input signal level	**0,5 - 30 Vss**
Phase position for the differential signals A, /A and B,/B	**90° ±30°**
Overload protection	**-50 - 65 V**
Input resistance	**20 kOhm**
Input's frequency range	**0 - 500 kHz**
Configurable monitoring frequency	
Without hysteresis	**0,1 Hz - 500 kHz**
Inputs	
Potential isolation	**yes**
Times	
Reaction time after limit value is exceeded	**1/f_ist + 16 ms**

Motion monitoring modules
PNOZ m EF 2MM

Environmental data	
Ambient temperature	
In accordance with the standard	**EN 60068-2-14**
Temperature range	**0 - 60 °C**
Forced convection in control cabinet off	**55 °C**
Storage temperature	
In accordance with the standard	**EN 60068-2-1/-2**
Temperature range	**-25 - 70 °C**
Climatic suitability	
In accordance with the standard	**EN 60068-2-30, EN 60068-2-78**
Condensation during operation	**Not permitted**
Max. operating height above sea level	**2000 m**
EMC	**EN 61131-2**
Vibration	
In accordance with the standard	**EN 60068-2-6**
Frequency	**5 - 150 Hz**
Acceleration	**1g**
Shock stress	
In accordance with the standard	**EN 60068-2-27**
Acceleration	**15g**
Duration	**11 ms**
Airgap creepage	
In accordance with the standard	**EN 61131-2**
Overvoltage category	**II**
Pollution degree	**2**
Protection type	
In accordance with the standard	**EN 60529**
Housing	**IP20**
Terminals	**IP20**
Mounting area (e.g. control cabinet)	**IP54**
Potential isolation	
Potential isolation between	**Sensor and system voltage**
Type of potential isolation	**Functional insulation**
Rated insulation voltage	**30 V**
Rated surge voltage	**2500 V**
Potential isolation between	**Sensor 1 and sensor 2**
Type of potential isolation	**Functional insulation**
Rated insulation voltage	**30 V**
Rated surge voltage	**2500 V**
Mechanical data	
Mounting position	**horizontally on mounting rail**

Motion monitoring modules
PNOZ m EF 2MM

Mechanical data	
DIN rail	
Top hat rail	**35 x 7,5 EN 50022**
Recess width	**27 mm**
Material	
Bottom	**PC**
Front	**PC**
Top	**PC**
Connection type	**Spring-loaded terminal, screw terminal**
Mounting type	**plug-in**
Conductor cross section with screw terminals	
1 core flexible	**0,25 - 2,5 mm², 24 - 12 AWG**
2 core with the same cross section, flexible without crimp connectors or with TWIN crimp connectors	**0,2 - 1,5 mm², 24 - 16 AWG**
Torque setting with screw terminals	**0,5 Nm**
Conductor cross section with spring-loaded terminals: Flexible with/without crimp connector	**0,2 - 2,5 mm², 24 - 12 AWG**
Spring-loaded terminals: Terminal points per connection	**2**
Stripping length with spring-loaded terminals	**9 mm**
Dimensions	
Height	**101,4 mm**
Width	**22,5 mm**
Depth	**111 mm**
Weight	**120 g**

Where standards are undated, the 2018-09 latest editions shall apply.

Safety characteristic data

Operating mode	EN ISO 13849-1: 2015 PL	EN ISO 13849-1: 2015 Category	EN IEC 62061 SIL CL	EN IEC 62061 PFH_D [1/h]	IEC 61511 SIL	IEC 61511 PFD	EN ISO 13849-1: 2015 T_M [year]
Monitoring 1 encoder	**PL d**	**Cat. 2**	**SIL CL 2**	**1,80E-08**	**SIL 2**	**1,58E-03**	**20**
Monitoring 2 encoder	**PL e**	**Cat. 3**	**SIL CL 3**	**1,01E-09**	**SIL 3**	**8,41E-05**	**20**
Monitoring safe encoder	**PL e**	**Cat. 4**	**SIL CL 3**	**2,35E-09**	**SIL 3**	**2,04E-04**	**20**
Logic	**PL e**	**Cat. 4**	**SIL CL 3**	**3,37E-10**	**SIL 3**	**2,88E-05**	**20**

Motion monitoring modules
PNOZ m EF 2MM

All the units used within a safety function must be considered when calculating the safety characteristic data.

Order reference

Product

Product type	Features	Order no.
PNOZ m EF 2MM	Expansion module	772 171

Accessories

Connection terminals

Product type	Features	Order no.
Spring terminals PNOZ 2MM 1 set	Spring-loaded terminals, 1 piece	783 544
Screw terminals PNOZ 2MM 1 set	Screw terminals, 1 piece	793 544

Terminator, jumper

Product type	Features	Order no.
PNOZ mm0.xp connector left	Jumper yellow/black to connect the modules, 10 pieces	779 260

Adapter cable

Product type	Features	Order no.
MM A MINI-IO CAB99	1.50 m	772200
MM A MINI-IO CAB99	2.50 m	772201
MM A MINI-IO CAB99	5.0 m	772202

Product type	Features	Order no.
PNOZ msi b4 Box	Connection box	773 845

Motion monitoring modules
PNOZ m EF 1MM2DO

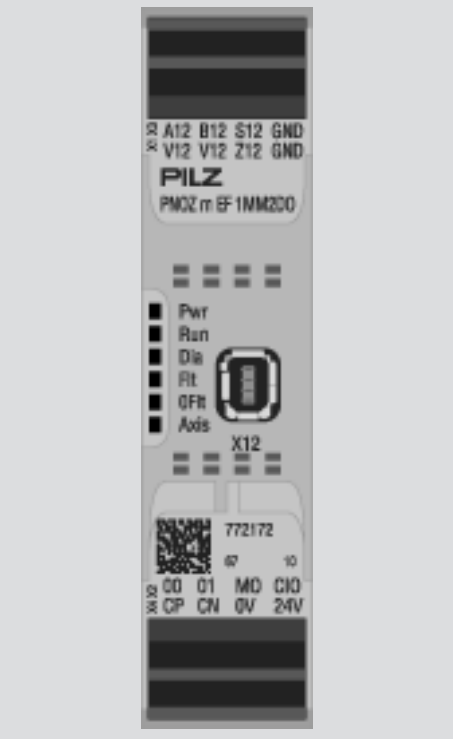

Overview

Unit features

Application of the product PNOZ m EF 1MM2DO:

Expansion module for connection to a base unit from the PNOZmulti 2 system.

The product has the following features:

- Can be configured in the PNOZmulti Configurator
- Monitoring of 1 axis
- Measured value recorded by proximity switch and encoder
- Monitoring functions
  - Safe speed monitoring (SSM)
  - Safe speed range monitoring (SSR-M)
  - Safe direction of movement monitoring (SDI-M)
  - Safe operating stop monitoring (SOS-M)
  - Safe stop 1 monitoring (SS1-M)
  - Safe stop 2 monitoring (SS2-M)
  - Safely limited acceleration monitoring (SLA-M)
  - Safely limited acceleration range monitoring (SAR-M)

Motion monitoring modules
PNOZ m EF 1MM2DO

  - Analogue voltage (track S)
- 2 safe semiconductor outputs
  - depending on the application, up to PL e of EN ISO 13849-1 and up to SIL CL 3 of EN IEC 62061
  - Switch-off delay in stop (event of an error) configurable
- 1 cascading input/output
- 1 semiconductor output for standard functions
- LED display for:
  - Supply voltage
  - Diagnostics
  - Axis status
  - Error
- Please refer to the document "PNOZmulti System Expansion" for details of the base units PNOZmulti 2 that can be connected.
- Plug-in connection terminals:
  Either spring-loaded terminal or screw terminal available as an accessory (see Order references for accessories [📖 772]).

Front view

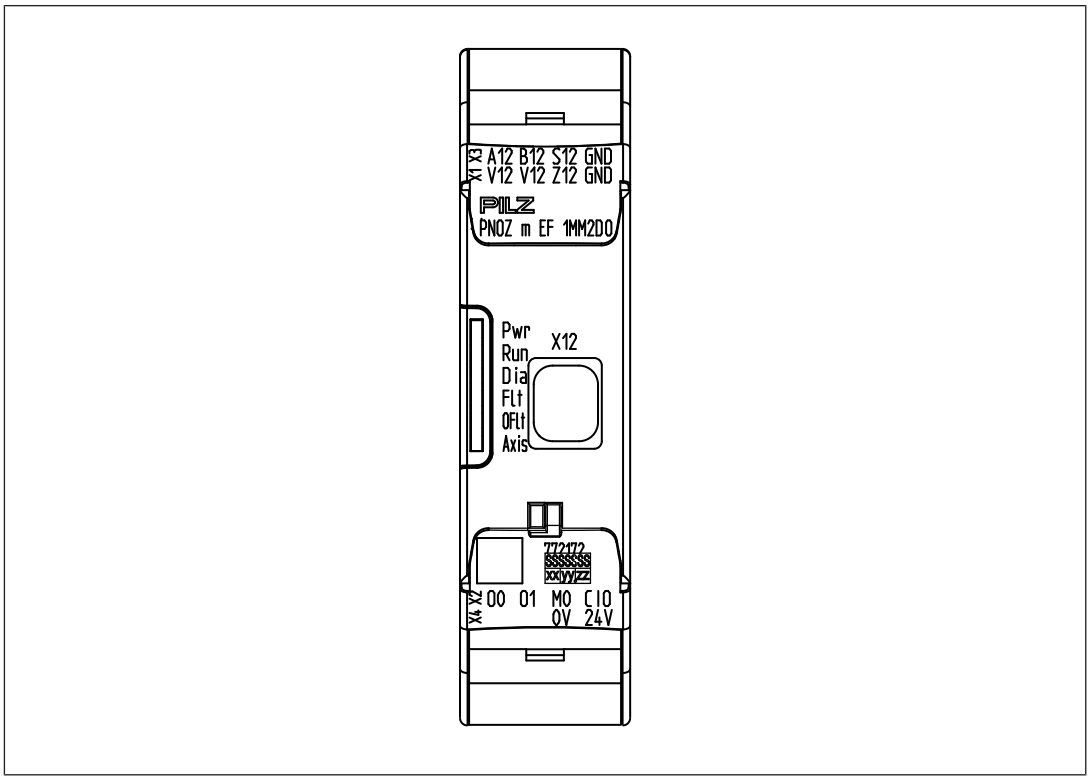

Motion monitoring modules
PNOZ m EF 1MM2DO

Legend

X1:	Connection for proximity switch on axis 1 (V12, V12, Z12, GND)
X2:	Safe semiconductor outputs O0, O1 semiconductor output for standard functions M0 cascading input/output CIO
X3:	Connection for proximity switch on axis 1 (A12, B12, S12, GND)
X4:	Supply connections 0 V, 24 V
X12:	Mini IO socket for connecting encoder or proximity switch
LEDs:	Pwr (Power)
	Run
	Dia (Diagnosis)
	Flt (Fault)
	OFlt (Output-Fault)
	Axis

Function description

Operation

The motion monitoring module PNOZ m EF 1MM2DO can safely monitor one axis. The recorded speed and position values can be evaluated in the user program using various monitoring functions.

The module has 2 safe semiconductor outputs for fast shutdown or for delayed shutdown (in case of an error) of transmissions.

With the standard cascading input/output a cross-system not safety-related fast shutdown cannot be implemented.

The configuration of the motion monitoring module is described in detail in the PNOZmulti Configurator's online help.

The relay meets the following safety requirements:

- The circuit is redundant with built-in self-monitoring.
- The safety device remains effective in the case of a component failure.
- The safety outputs are tested periodically using an off-test.

The module supplies diagnostic data, such as:

- Start-up error
- Configuration error
- FS communication error
- Temperature error: too hot
- Output error
- Supply voltage error

Motion monitoring modules
PNOZ m EF 1MM2DO

Block diagram

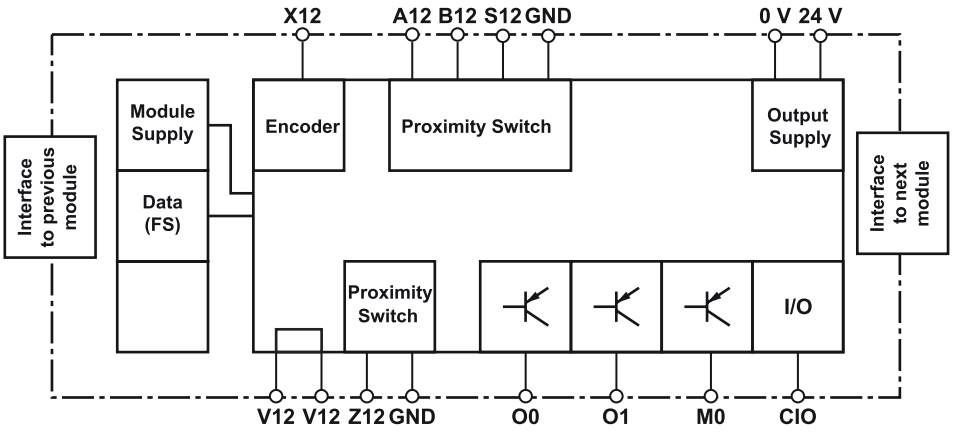

Monitoring functions

The motion monitoring module PNOZ m EF 1MM2DO supports the following monitoring functions.

Please note that the position monitoring functions SOS-M, SDI-M and SS2-M cannot be used in conjunction with 2 proximity switches, as no position can be detected.

Safe speed monitoring

The ***Safe speed monitoring*** function (SSM) monitors the current speed to see if a limit value is exceeded.

If the configured limit value is exceeded, the output switches off. As soon as the value falls below the limit value (plus hysteresis), the output switches off again.
If a manual reset is configured, the output will not switch back on until the value is inside the limit value (plus hysteresis) and the reset input is activated.

12 limit values can be configured per axis in the PNOZmulti Configurator.

A tolerance range may also be set for the limit values used to monitor the speed. This tolerance range modifies the set limit values. As a result, one-off or periodic overshoots that exceed the limit values can be tolerated.
The following values can be configured for the tolerance range:

- Tolerance time (t1), which takes into account the length of the overshoots (maximum time for which the limit value may be exceeded). It must not be possible that the sum of all the overshoots exceeds the tolerance time (t1) within a tolerance period (t2).
- Tolerance period (t2), which takes into account the oscillation period (minimum time that must elapse between one limit value overshoot and the next)
- Tolerance amount (%), which takes into account the amplitude of the overshoots (maximum permitted percentage by which the configured limit values may be exceeded)

Motion monitoring modules
PNOZ m EF 1MM2DO

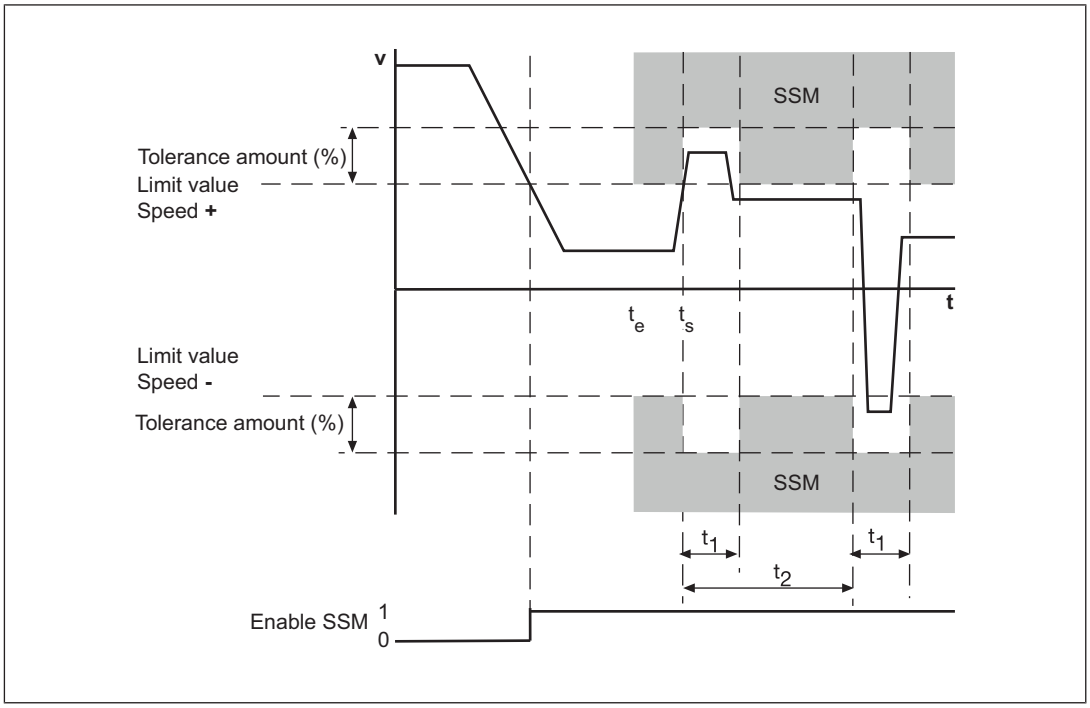

Legend:

- Enable SSM:
  - "1": Monitored limit value not exceeded
  - "0": Monitored limit value exceeded
- t_s: Speed v exceeds the limit value and activates the tolerance range (tolerance time, tolerance period, tolerance amount)
- t_1: Tolerance time
- t_2: Tolerance period
- Tolerance amount (%): Tolerance amount of limit value in both directions

Safe speed range monitoring

The ***Safe speed range monitoring*** function (SSR-M) monitors the current speed to ensure it stays within a maximum and minimum permitted limit value.

If the speed is outside the configured range, the output switches off. As soon as the speed returns to within the configured range (plus hysteresis), the output switches back on.
If a manual reset is configured, the output will not switch back on until the value is inside the limit value (plus hysteresis) and the reset input is activated.

2 ranges can be configured per axis in the PNOZmulti Configurator.

A tolerance range may also be set for the limit values used to monitor the speed range. This tolerance range modifies the set limit values. As a result, one-off or periodic overshoots that exceed the range limits can be tolerated.

The following values can be configured for the tolerance range:

Motion monitoring modules
PNOZ m EF 1MM2DO

- Tolerance time (t1), which takes into account the length of the overshoots (maximum time for which the limit value may be exceeded). It must not be possible that the sum of all the overshoots exceeds the tolerance time (t1) within a tolerance period (t2).
- Tolerance period (t2), which takes into account the oscillation period (minimum time that must elapse between one limit value overshoot and the next)
- Tolerance amount as a %, which takes into account the amplitude of the overshoots (maximum permitted percentage by which the limit value may be exceeded)

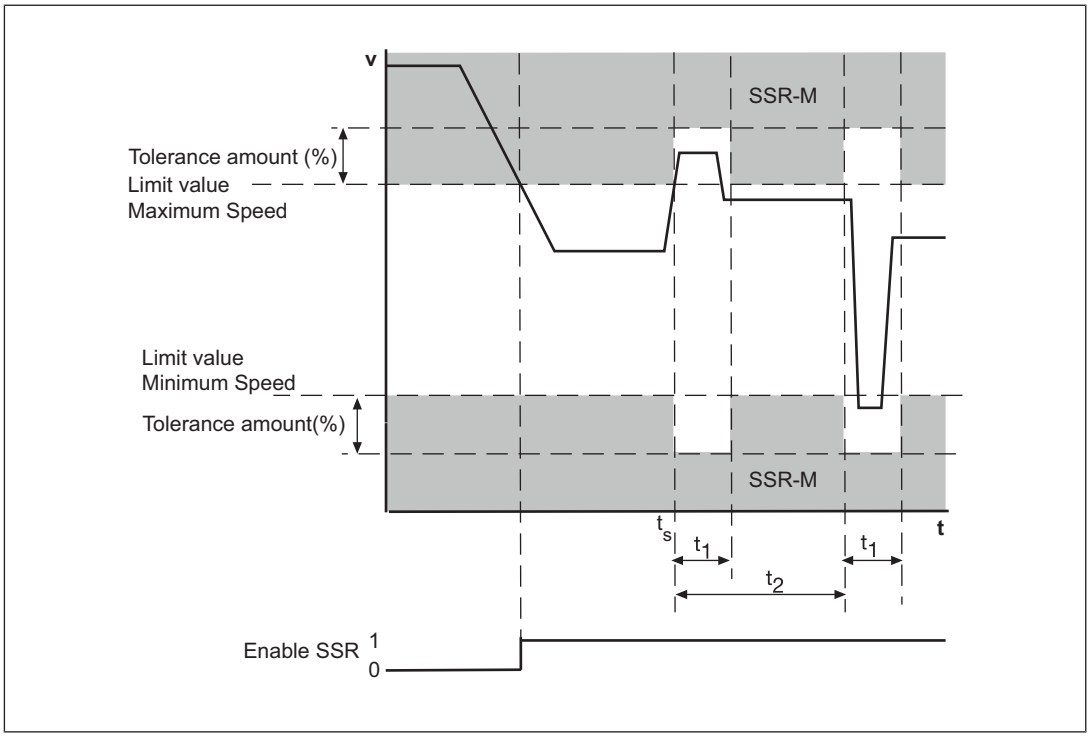

Legend:

- Enable SSR:
  - "1": Speed is within the configured range
  - "0": Speed is outside the configured range
- t_s: Speed v exceeds the limit value and activates the tolerance range (tolerance time, tolerance period, tolerance amount)
- t_1: Tolerance time
- t_2: Tolerance period
- Tolerance amount (%): Tolerance amount of the two limit values, maximum and minimum speed

Motion monitoring modules
PNOZ m EF 1MM2DO

Safe direction monitoring

The ***Safe direction monitoring*** function (SDI-M) monitors the direction of movement defined for the drive axis (positive or negative). Safe direction of movement monitoring is activated via the start input. It remains active until the configured tolerance is exceeded in the opposite direction. The function can be retriggered at any time by a rising edge at the start input. As a result, the current position can be used at any time as the start point for the monitoring function.

One SDI-M element can be configured per axis for each direction in the PNOZmulti Configurator.

Please note:
This monitoring function cannot be used in conjunction with 2 proximity switches because position detection is not possible.

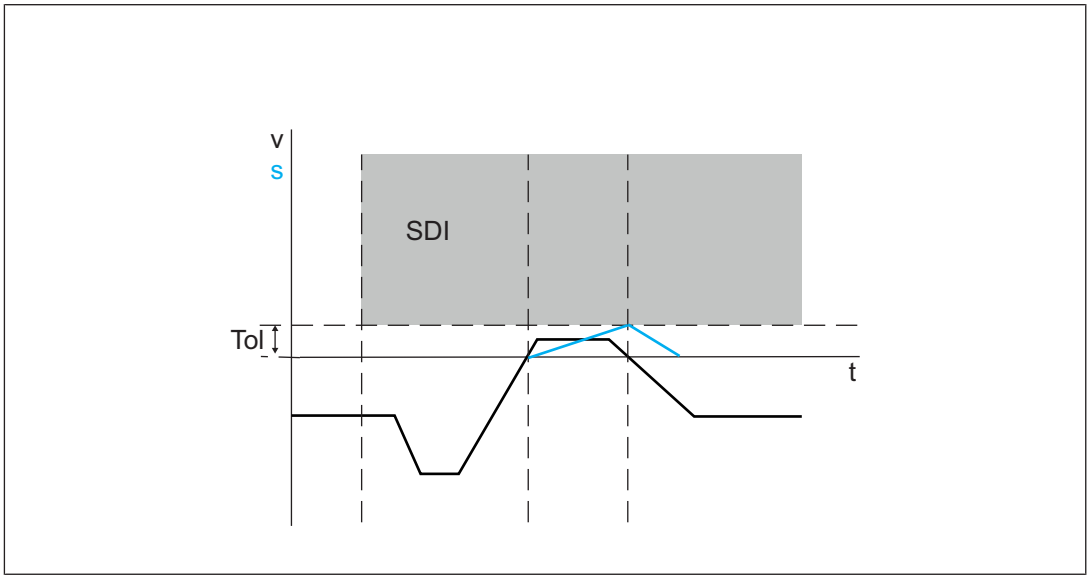

Motion monitoring modules
PNOZ m EF 1MM2DO

Safe operating stop monitoring

The ***Safe operating stop monitoring*** function (SOS-M) monitors whether the stop position remains within a configured tolerance window. Safe operating stop monitoring is activated within a rising edge at the start input. It remains active until the value is outside the tolerance band. The function can be retriggered at any time by a rising edge at the start input. As a result, the current position can be used at any time as the start point for the monitoring function.

3 SOS-M elements can be configured per axis in the PNOZmulti Configurator.

Please note:
This monitoring function cannot be used in conjunction with 2 proximity switches because position detection is not possible.

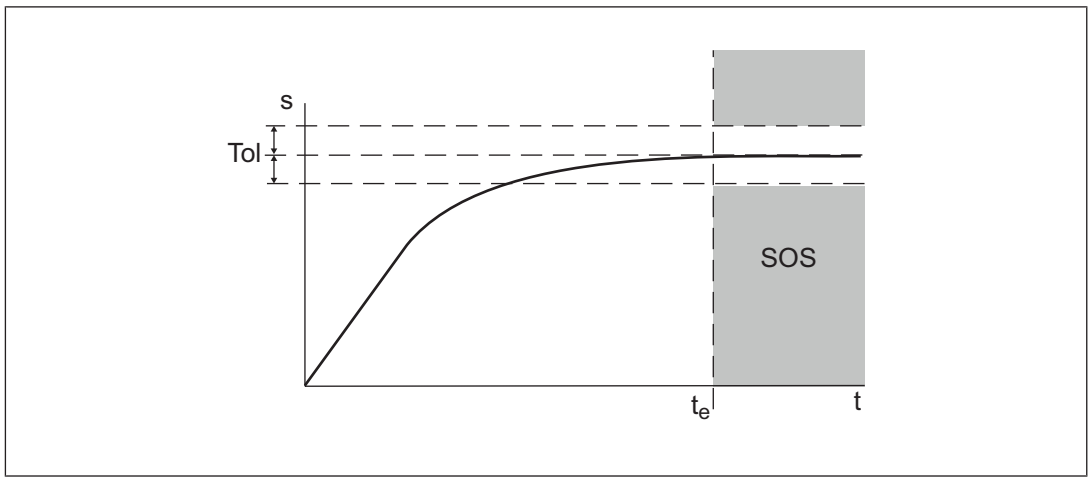

Legend:

- t_e: Activation of the monitoring function SOS

Motion monitoring modules
PNOZ m EF 1MM2DO

Safe stop 1 monitoring

The ***Safe stop 1 monitoring*** function (SS1-M) monitors whether the set delay time has elapsed (until controlled braking of the motor) or the standstill limit value for automatic STO is below the limit value.

- If the monitoring function SS1-M is triggered, the ***Braking ramp*** output is switched off. The drive controller's braking ramp is activated.
- After the set delay time has elapsed or the value for the automatic STO is below the limit value, the output ***ST*** switches off. The safety function ***Safe torque off*** (STO) is activated.

A maximum of 1 SS1-M element can be configured per axis in the PNOZmulti Configurator.

Sequence without standstill limit value for automatic STO:

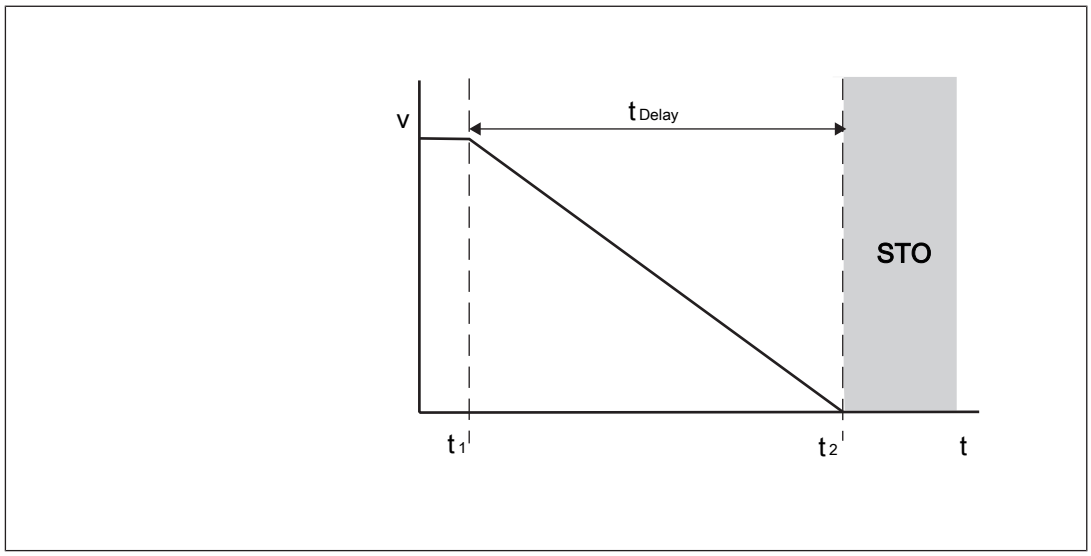

Legend

t_1:	Monitoring function SS1-M is activated
t_2:	Delay time elapses, safety function "Safe torque off" (STO) is activated
t_{Delay}:	Set delay time for controlled braking of motor

Motion monitoring modules
PNOZ m EF 1MM2DO

Sequence with standstill limit value for automatic STO:

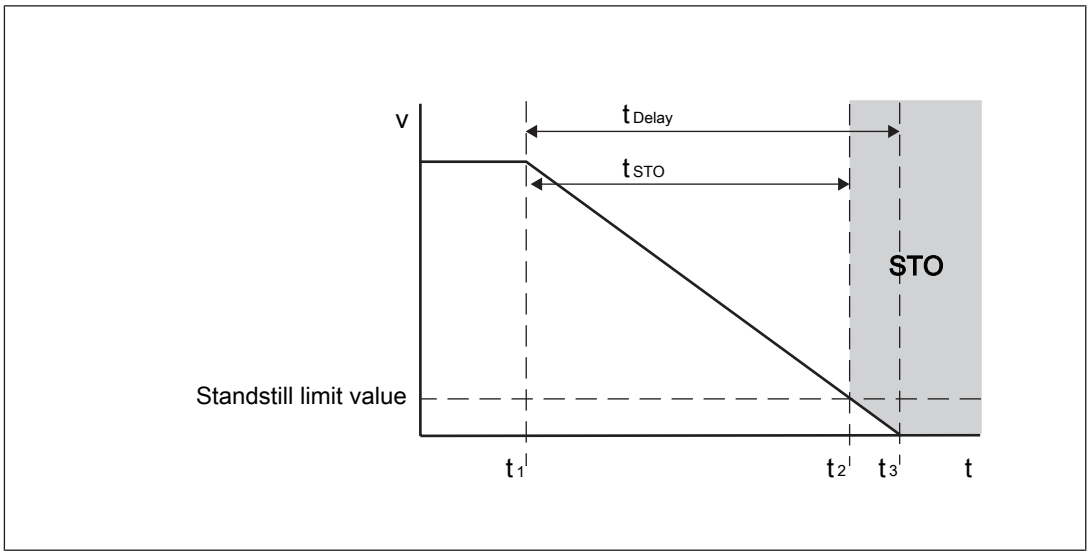

Legend

t_1:	Monitoring function SS1-M is activated
t_2:	Standstill limit value for automatic STO reached, safety function "Safe torque off" (STO) is activated
t_3:	Delay time elapses
t_{Delay}:	Set delay time for controlled braking of motor
t_{STO}:	Actual time from activation of monitoring function until STO is activated

Safe stop 2 monitoring

The ***Safe stop 2 monitoring*** function (SS2-M) monitors

- Whether the set delay time has expired (until controlled braking of the motor) or the standstill limit value for automatic SOS is below the limit value.

  and

- Whether the stop position ultimately remains within a configured tolerance window.

Reaction:

- If the monitoring function SS2-M is triggered, the "Braking ramp" output switches off. The drive controller's braking ramp is activated.
- If the set delay time has elapsed or the value for the automatic SOS is below the limit value, the stop position is monitored, the ***Position monitoring*** output switches on. If the stop position is outside the tolerance window, the ***Position monitoring*** and ***STO*** outputs switch off, the safety function ***Safe torque off*** (STO) is activated.

A maximum of 1 SS2-M element can be configured per axis in the PNOZmulti Configurator.

Please note:
This monitoring function cannot be used in conjunction with 2 proximity switches because position detection is not possible.

Motion monitoring modules
PNOZ m EF 1MM2DO

Sequence without standstill limit value for automatic SOS:

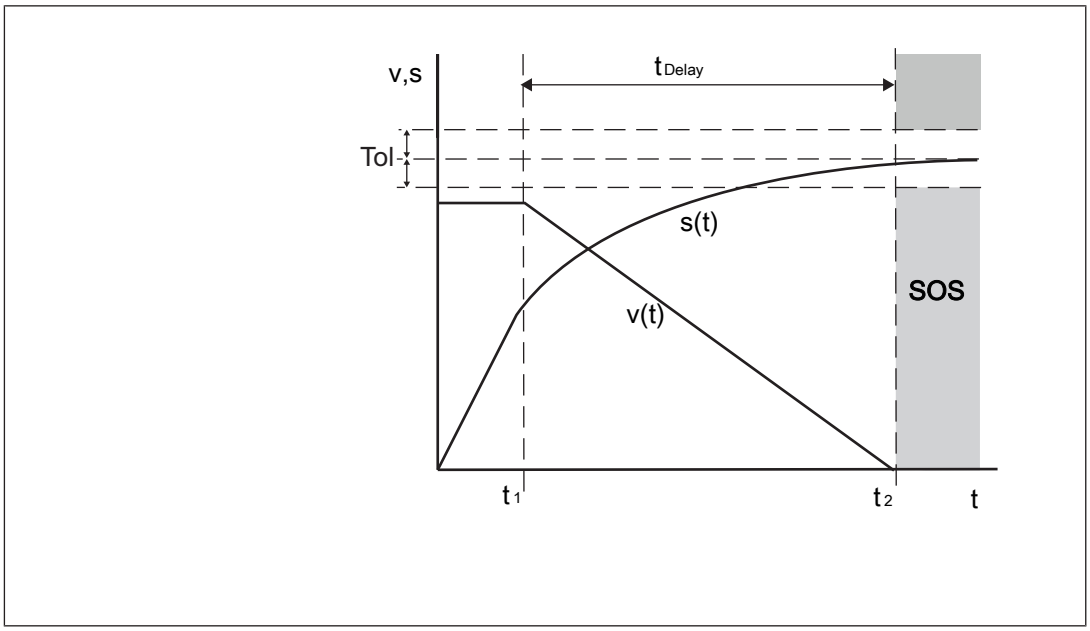

Legend

t_1:	Activation of the monitoring function SS2-M
t_2:	Delay time elapses, monitoring of stop position (SOS) is activated
t_{Delay}:	Set delay time for controlled braking of motor

Sequence with standstill limit value for automatic SOS:

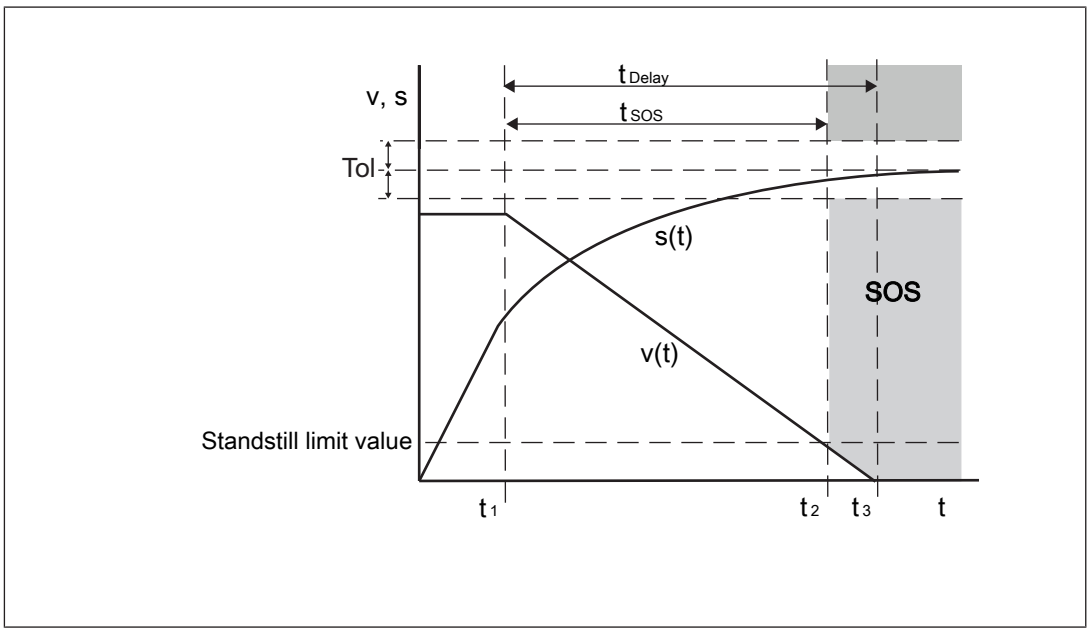

Legend

t_1:	Activation of the monitoring function SS2-M

Motion monitoring modules
PNOZ m EF 1MM2DO

t_2: Standstill limit value for automatic SOS reached, monitoring of stop position (SOS) is activated

t_3: Delay time elapses

t_{Delay}: Set delay time for controlled braking of motor

t_{STO}: Actual time from activation of monitoring function until STO is activated

Sequence when stop position is violated:

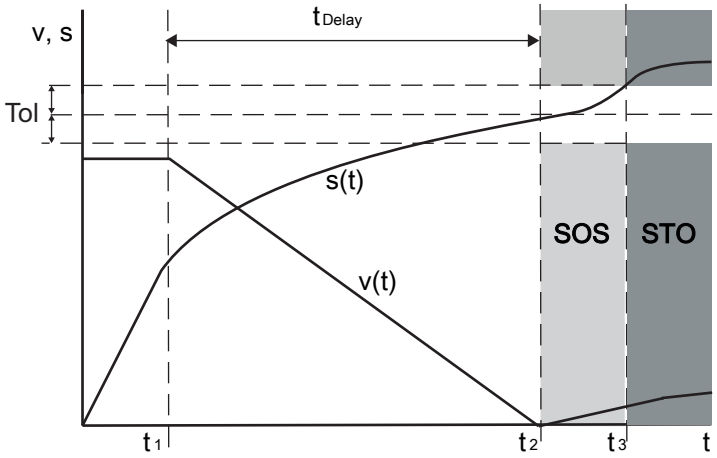

Legend

t_1: Activation of the monitoring function SS2-M

t_2: Standstill limit value for automatic SOS reached, monitoring of stop position (SOS) is activated

t_3: Stop position outside of tolerance window, safety function "Safe torque off" (STO) is activated

t_{Delay}: Set delay time for controlled braking of motor

Safely limited acceleration monitoring (SLA-M)

The monitoring function ***Safely limited acceleration monitoring*** monitors the speed change per time unit.
Both the acceleration and the deceleration can be monitored.
Monitoring checks whether the acceleration or deceleration exceeds or falls below a certain limit value.

4 SLA-M elements can be configured per axis in the PNOZmulti Configurator.

The monitoring function ***Safely limited acceleration monitoring*** is activated with a rising edge at the start input. The trigger detection phase starts with a falling edge at the start input. In this process the current speed is taken as the start speed.

Monitoring of safely limited acceleration starts,

- when the trigger threshold is passed, that is, when the start speed changes by the configured percentage (V1).
- When monitoring starts within the maximum trigger time (t1).

When monitoring is started, the set acceleration is calculated as a straight line V_{Set}. A tolerance band $V_{Tolerance}$ is calculated from the Tolerance and V_{Edge} parameters. If the actual speed V_{Actual} leaves the tolerance band, the output ***Enable SLA*** switches off.

Monitoring is ended,

- When monitoring is reset by a rising edge at the start input,
- When a range has been violated and it is no longer possible to return within the valid range,
- When the target speed is passed.

Example: Monitoring for too fast acceleration

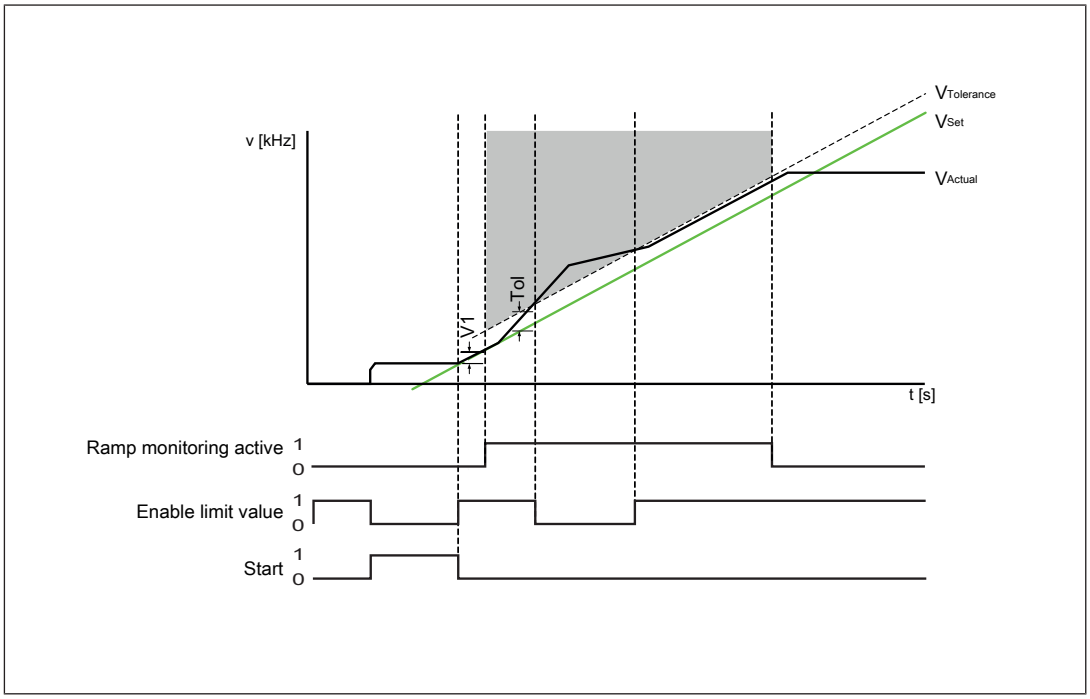

Safely limited acceleration range monitoring (SAR-M)

The monitoring function ***Safely limited acceleration monitoring*** monitors the speed change per time unit.
In contrast to the monitoring function SLA-M, safely limited acceleration range monitoring monitors not only a limit value but also the upper and lower limit value simultaneously. Both the acceleration and the deceleration can be monitored.

Otherwise the functionality is the same as the monitoring function SLA-M.

4 SAR-M elements can be configured per axis in the PNOZmulti Configurator.

Motion monitoring modules
PNOZ m EF 1MM2DO

Example: Monitoring for too fast and too slow acceleration

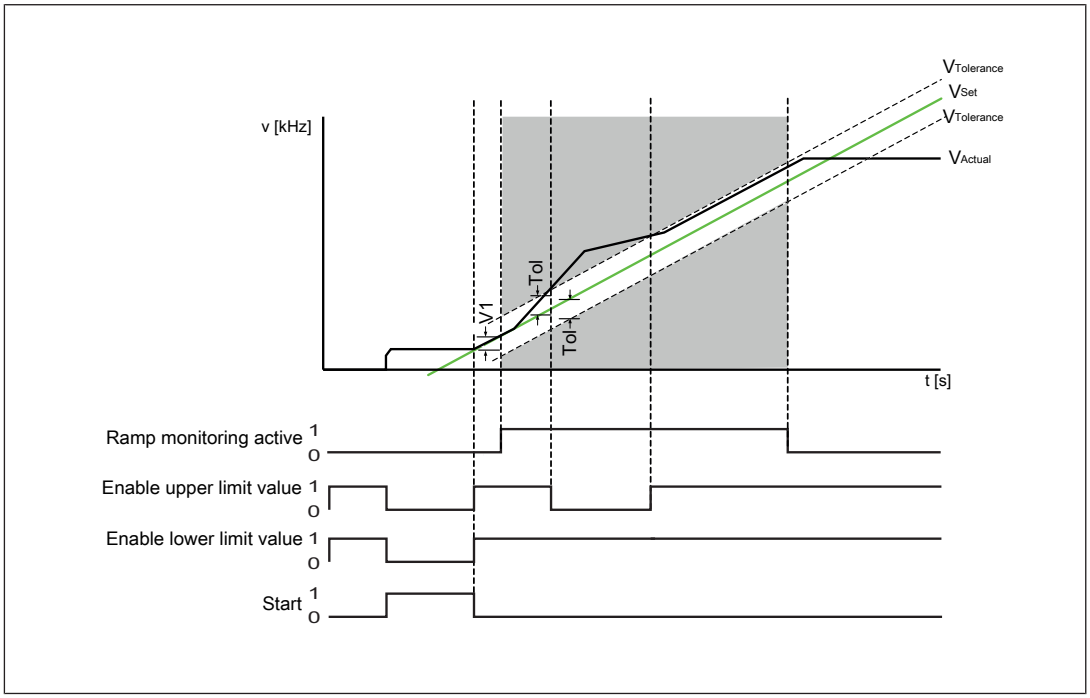

Central motion monitoring functions

These functions apply centrally for all the monitoring functions.

Hysteresis

A central hysteresis can be configured for the monitoring functions. This prevents the outputs from bouncing if there are fluctuations around the response value. The hysteresis takes effect when the output is switched on.

Validation cut-off frequency

As implausible sensor signals may arise due to jitter on the sensors around the stop position, a central validation cut-off frequency must be configured for sensor types with proximity switches in the PNOZmulti Configurator (edge jitter is caused by the position control of the drive frequency converter or by external interference signals).

If the value of the validation cut-off frequency falls below the configured value, the feasibility check of the sensors will no longer be run.

Advanced Settings tab

A tolerance time can be configured for tracks AB, Z and S respectively.

The tolerance time influences the sensitivity towards invalid signal levels (e.g. in the event of EMC interference).

The greater the configured tolerance time, the less sensitive the system will be towards invalid signal levels.

Motion monitoring modules
PNOZ m EF 1MM2DO

The tolerance time can be deactivated for individual tracks by setting 0 ms.

System reaction time

Calculation of the maximum reaction time between an input switching off and a linked output in the system switching off is described in the document "PNOZmulti System Expansion [30]".

Proximity switch

- Proximity switches can be used with a pnp or npn output.
- The proximity switches must be fitted so that at least one is always activated. In other words, the proximity switches must be fitted so that the recorded signals always overlap.
- The cable used to connect the proximity switches must be shielded (see connection diagrams in the chapter entitled "EMC-compliant wiring").
- A DC voltage in the range of 0 - 30 V can be monitored via track S. It should be used to monitor the supply voltage of the proximity switches.

Proximity switch assembly:

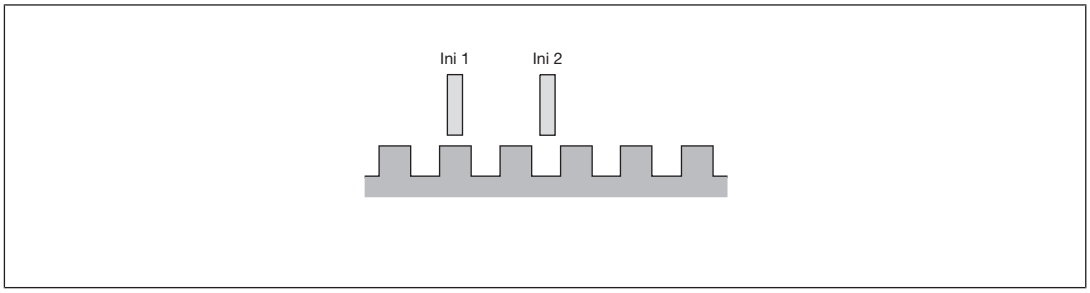

Signal characteristics:

Proximity switch combinations	Signal image in an energised state
PNP / PNP	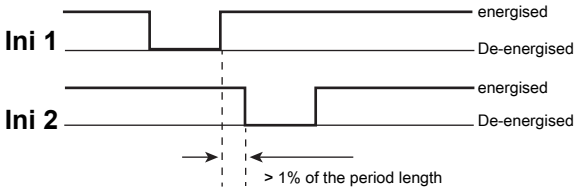
NPN / NPN	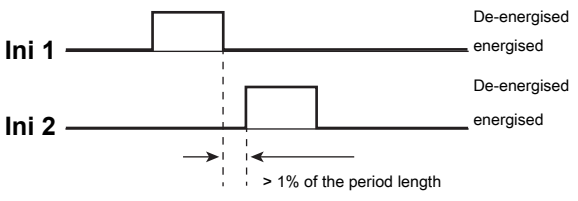

Motion monitoring modules
PNOZ m EF 1MM2DO

Proximity switch combinations	Signal image in an energised state
NPN / PNP	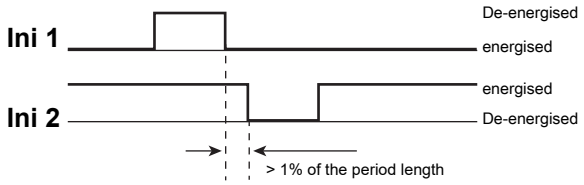
PNP / NPN	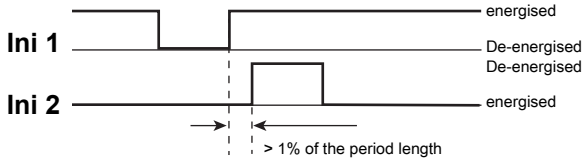

- For a full configuration, the maximum frequency of the sensors you are using must be entered in the PNOZmulti Configurator (see sensor's data sheet).

Special features for proximity switches with reduced diagnostics

- A: pnp, B: pnp
- It is permitted that both proximity switches are energised simultaneously.
- The safety level is reduced.
- The cables for connecting the proximity switches must be laid separately.
- The supply voltage of the proximity switches must be monitored (e.g. via track S).

Encoder

- The following encoders can be used:
  - TTL, HTL (single-ended or differential signals)
  - Sin/Cos 1 Vss
  - Hiperface®
- The encoders can be connected with or without Z index (0 index).
- The cables used to connect the encoders must be shielded (see connection diagrams in the chapter entitled "EMC-compliant wiring").
- A proximity switch can also be connected to track Z to monitor for broken shearpins.
  Please note:
  Broken shearpin monitoring only becomes active when
  - The minimum speed is exceeded

    and

– The tolerance for detecting feasibility errors has elapsed.

The minimum speed and tolerance depend on the ratio of the frequency on tracks AB "f_{AB}" to the frequency on track Z "f_Z" in your configuration (see PNOZmulti Configurator ***Motion Monitor Element***, ***Calculated Ratio AB/Z***).
Minimum speed:

– Calculated ratio AB/Z ≥ 1.0
f_Z = 10 mHz or $f_{AB} = (f_{AB}/f_Z) \times 10$ mHz

– when f_{AB}/f_Z ***Ratio*** < 1.0
f_{AB} = 10 mHz or $f_Z = 10\ \text{mHz}/(f_{AB}/f_z)$

Tolerance for detecting feasibility errors:

– when f_{AB}/f_Z ***Ratio*** ≥ 1.0
7.5 Z pulses or 7.5 x (f_{AB}/f_Z) AB pulses

– when f_{AB}/f_Z ***Ratio*** **<** 1.0
4.5 AB pulses or 4.5 x (f_{AB}/f_Z) Z pulses

- With Hiperface encoders, the Sin- Cos track is recorded and monitored via an adapter (see Adapters for encoders [📖 927]).
- Track S can be used:
  – To connect an encoder's error output.
  – To monitor voltages between 0 V and 30 V for a permitted upper and lower limit. For example, the encoder's supply voltage can be monitored.
- The maximum frequency of the used encoders must be entered for a complete configuration.
- Pay attention to the values in the technical details.

Output signals

Output signals TTL, HTL

Single ended

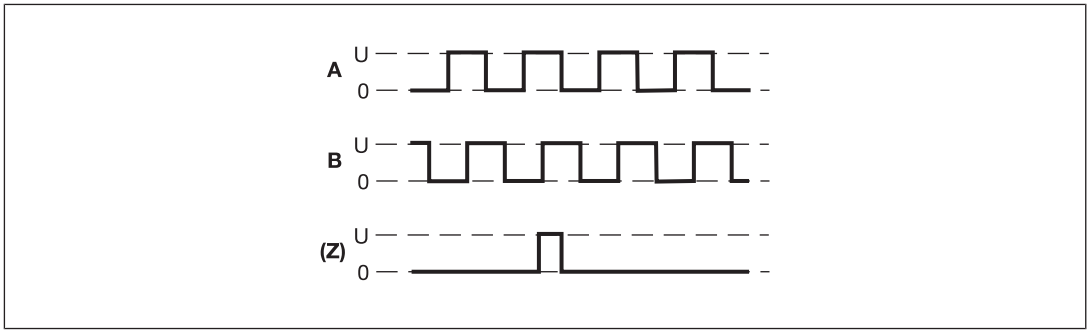

Motion monitoring modules
PNOZ m EF 1MM2DO

Differential

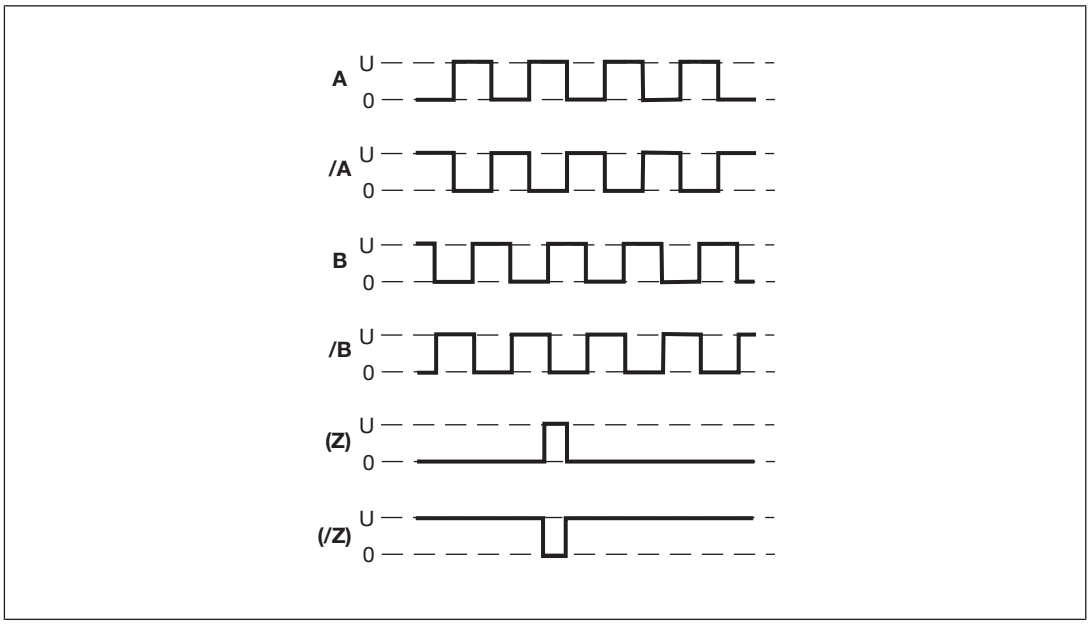

Output signals Sin/Cos (1 Vss)

Single ended with reference track (e.g. Hiperface ®)

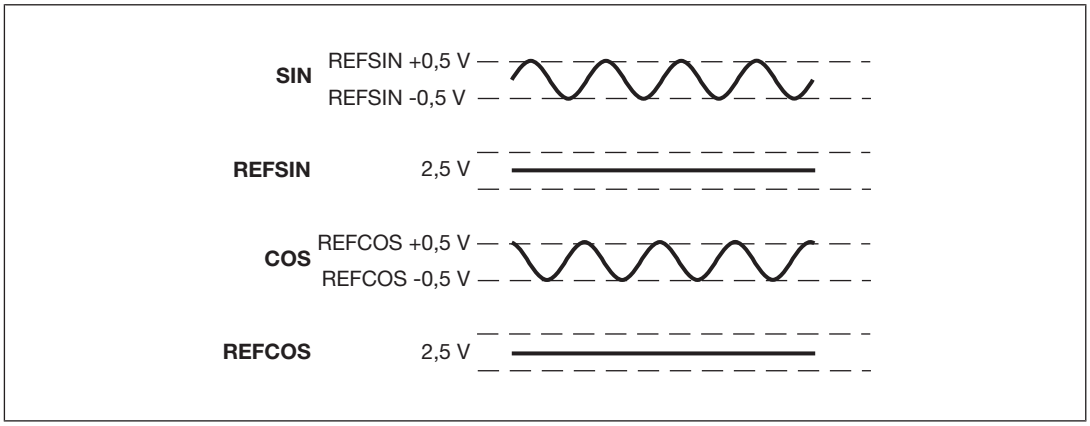

Motion monitoring modules
PNOZ m EF 1MM2DO

Differential with/without Z index (e.g. Heidenhain 1 Vss)

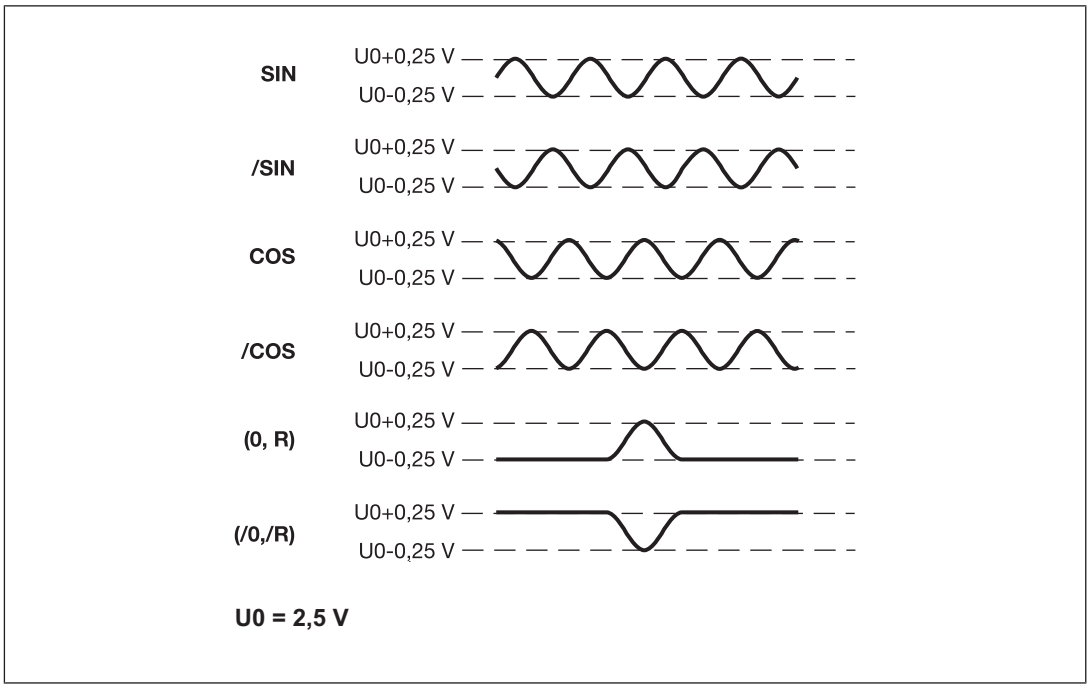

Adapters for encoders

The adapter records the data between the encoder and the drive and makes it available to the PNOZ m EF 1MM2DO via the Mini-IO socket.

Pilz supplies complete adapters as well as ready-made cable with Mini-IO connector, which can be used when making your own adapter. The range of products in this area is constantly being expanded. Please contact us about the range of adapters that is currently available.

Supply

The module is internally supplied by the base unit.

Outputs

The expansion module provides safe semiconductor outputs and it may be used for safe applications in the system PNOZmulti 2. The outputs may be used to switch:

- Resistive loads
- Inductive loads
- Capacitive loads

Signals at the output

- "0" signal (0 V) at the output:
  - Output is high impedance

Motion monitoring modules
PNOZ m EF 1MM2DO

- No current to the load

- "1" signal (+24 V) at the output:
  - Output is low impedance
  - Current is supplied to the load

Output test

Outputs that are switched on are checked via regular off tests.

- Switch-off tests are performed once per test cycle
- Outputs that are switched on are switched off for the duration of the off test.

Testing for shorts

- For applications in accordance with Category 4, PL e and SIL 3, detection of shorts between contacts must be guaranteed through additional measures (e.g. asynchronous switching on - once per shift).
- A short between contacts must be simulated during commissioning.
- In the on state, shorts across contacts to the supply voltage are not detected. Only with the next operational switching off of the output it is detected whether there is a short circuit to the supply voltage on the line to the load.

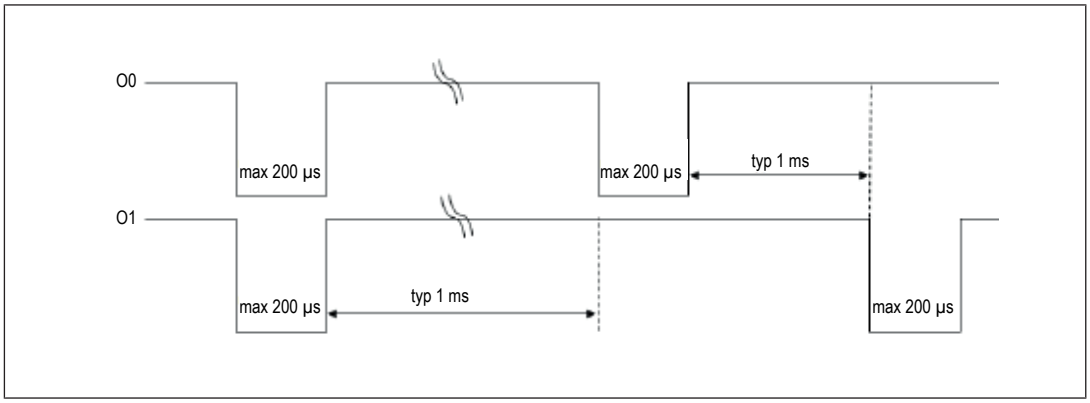

Fig.: Signal characteristic at the semiconductor outputs O0 and O1 while switched on

Outputs

- The max. capacity at an output depends on the load. Connecting a higher capacity may lead to an error.
- Operation with electronic contactors has not been tested and may lead to errors.

Switch-off delay in stop

A switch-off delay can be configured for each of the safe semiconductor outputs on the PNOZ m EF 1MM2DO module. When switching to a system stop, the safe semiconductor outputs switch off in accordance with the configured time delay. All the self-tests of the module PNOZ m EF 1MM2DO continue to be performed during the switch-off delay.

Motion monitoring modules
PNOZ m EF 1MM2DO

Cascading

Cascading enables up to 8 modules to be networked. A combined standard input/output CIO connects the modules. In the Configurator, cascading can be linked to any monitoring function. If the monitoring function is triggered, a non-safety-related fast shutdown of all the cascaded functions is initiated.

- Connect the CIO terminals of all modules whose monitoring functions are to be linked.
- Make sure that the modules are connected to a common 0 V supply.
- Cascading is used for fast messaging between the networked modules.

Motion monitoring modules
PNOZ m EF 1MM2DO

Installation

Dimensions in mm

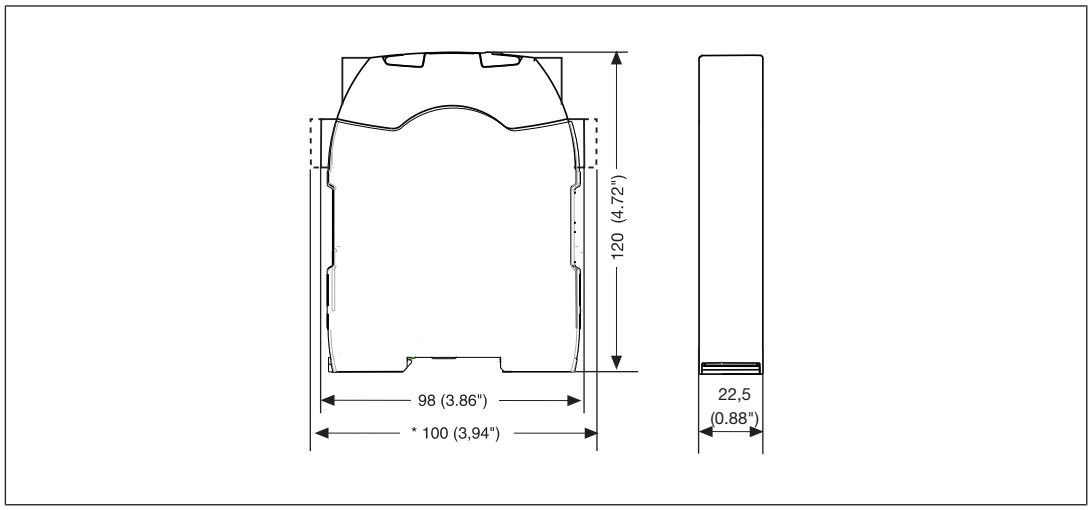

Commissioning

Wiring

The wiring is defined in the circuit diagram of the PNOZmulti Configurator.

Please note:

- Information given in the Technical details [📖 943] must be followed.
- The position of the expansion module is specified in the Hardware configuration of the PNOZmulti Configurator.
- Use copper wiring with a temperature stability of 75 °C.
- The power supplies for the safety system and sensors must comply with the regulations for low voltages with safe isolation.
- The cable used to connect the encoders and proximity switches must be shielded (see connection diagrams in the chapter entitled "EMC-compliant wiring").
- The shield may only be connected to earth at a single point.
- Earth loops should be avoided.
- If possible, the connections for the various earth potentials (GND, A2) should not be connected on the PNOZ m EF 1MM2DO but should be connected directly to the GNDs on the connected units. otherwise noise susceptibility may be increased significantly (conductor loops are not permitted).
- If short circuits occur between the cable from the output to the load and a supply line, it will no longer be possible to switch off the load. Possible remedies:
  - Exclude the error by using separate multicore cable for supply voltages

Motion monitoring modules
PNOZ m EF 1MM2DO

- Use an additional shutdown device such as a main contactor

- Use appropriate wiring to exclude short circuits between the outputs!
- Protect the supply voltage as follows:
  - Circuit breaker, characteristic C - 3 A

    or
  - Blow-out fuse, slow, 3 A
- With lift applications, the screen of the encoder should be connected to earth on both sides.

Connection supply voltage and outputs

Supply voltage

Supply voltage	DC
	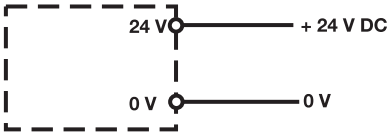

Connection examples for semiconductor outputs

Redundant output	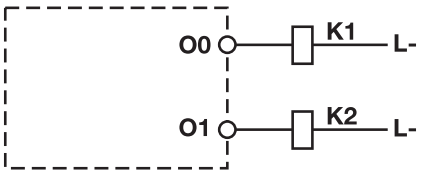	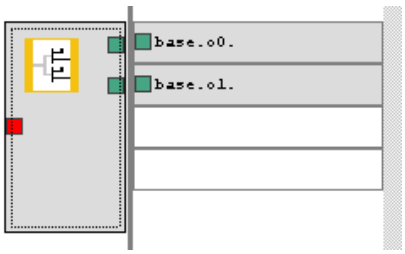
Single output	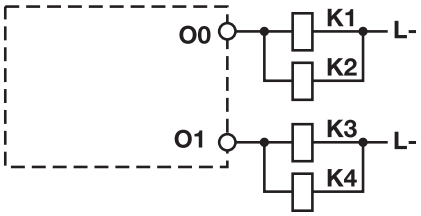	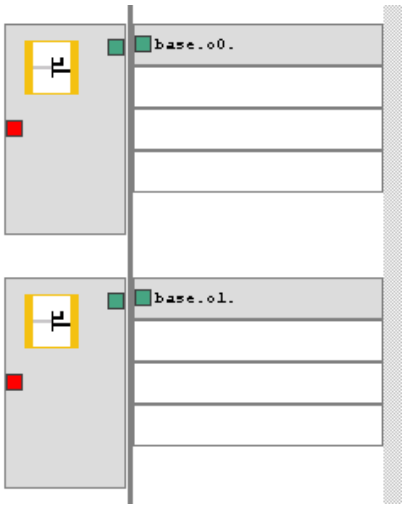

Motion monitoring modules
PNOZ m EF 1MM2DO

Single output with advanced fault detection*	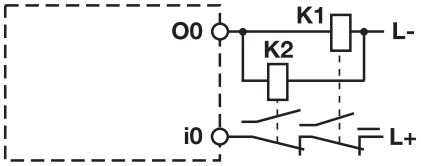	

*Two loads may be connected to each safety output with advanced fault detection, even on applications in accordance with EN IEC 62061, SIL CL 3. Prerequisite: Feedback loop is connected, shorts across contacts and external power sources are excluded (e.g. through separate multicore cables). Please note that, in the event of an error in the feedback loop, the safety system switches to a safe condition and shuts down **all** the outputs.

Connection example feedback loop

Feedback loop	Redundant output	
Contacts from external contactors	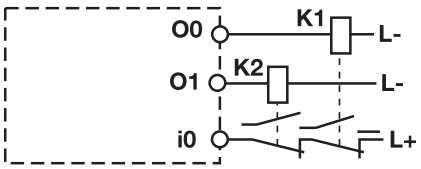	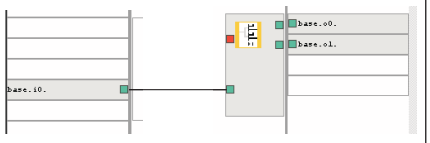

Pin assignment of Mini-IO socket

Mini-IO socket 8-pole	PIN	Track
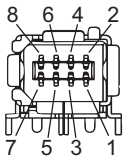	1	S
	2	GND
	3	Z
	4	A
	5	/A
	6	/Z
	7	B
	8	/B

Connection of proximity switches

The following proximity switch combinations can be connected:

- A: pnp, B: pnp
- A: npn, B: npn
- A: pnp, B: npn
- A: npn, B: pnp

Motion monitoring modules
PNOZ m EF 1MM2DO

When connecting proximity switches please note:

- Proximity switches can be connected to
  - terminals A12, B12, GND for axis 1
    or
  - tracks A, B and GND of the Mini-IO socket (X12 for axis 1).
- The terminal points V12 can be used as a shunt terminal, for example for the supply voltage of the proximity switches. The current load capacity is max. 3 A per terminal.
- Track S (S12) should be used to monitor the supply voltage (see drawing). A permitted voltage range can be entered in the menu.
- Connect the proximity switch to 24 V DC of the power supply.
- When connecting the proximity switches, please refer to the chapter entitled "EMC-compliant wiring".
- Invalid signals may occur with long cable lengths. In this case we recommend that you connect a resistor between the signal lines, as shown in the diagrams.
- Connection of the proximity switches may only be performed in three-wire technology and not in two-wire technology.
- Special features for proximity switches with reduced diagnostics:
  - A: pnp, B: pnp
  - It is permitted that both proximity switches are energised simultaneously.
  - The safety level is reduced.
  - The cables for connecting the proximity switches must be laid separately.
  - The supply voltage of the proximity switches must be monitored (e.g. via track S).

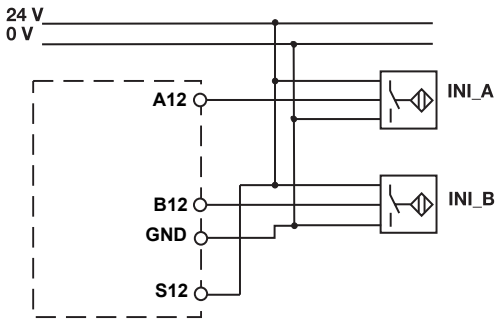

Motion monitoring modules
PNOZ m EF 1MM2DO

pnp proximity switch with resistor R = 10 kOhm

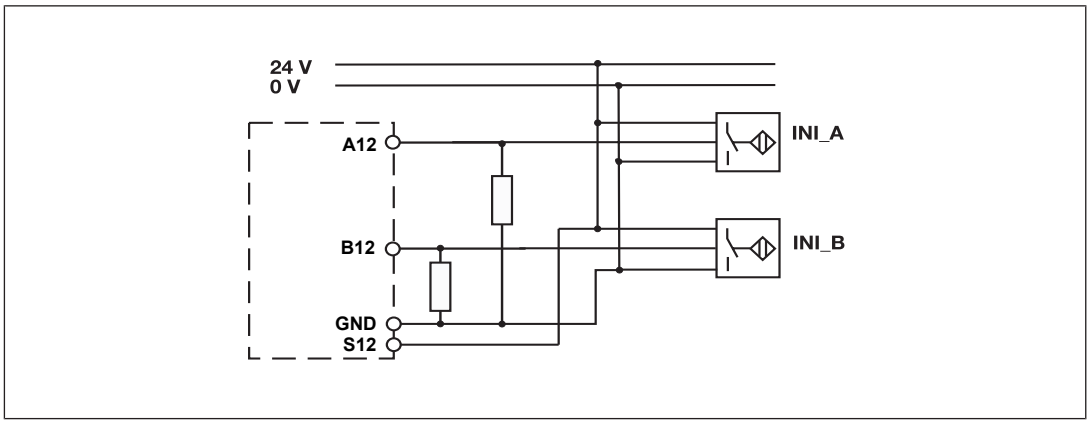

npn proximity switch with resistor R = 47 kOhm

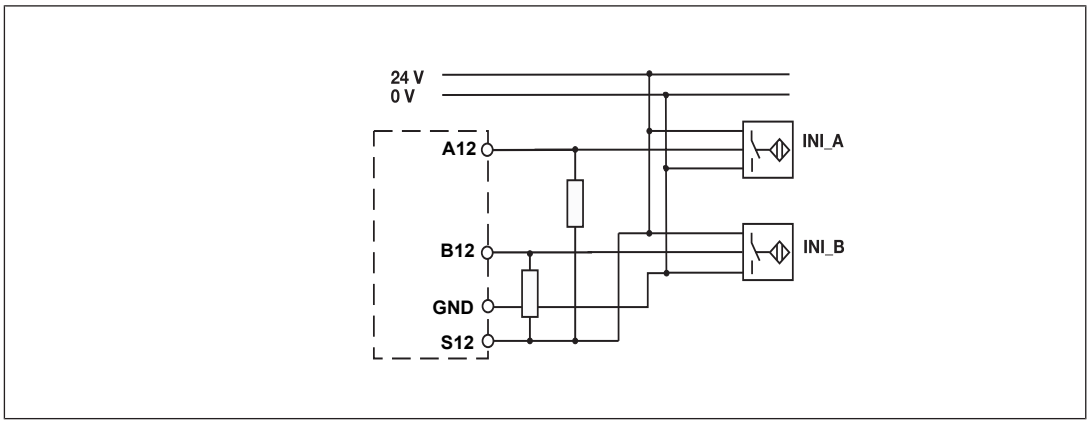

Connection of an encoder

Proceed as follows when connecting the encoder:

- The encoder can be connected via an adapter (e.g. MM A Mini-IO-CAB99) or directly to the PNOZ m EF 1MM2DO.
- Use only shielded cables for all connections. Please refer to the chapter entitled "EMC-compliant wiring".
- Always connect GND on the encoder to GND on the Mini-IO connector.
- If the encoder signals are not terminated with 120 Ohm in the frequency converter, the encoder signals must be terminated with Z_0 = 120 Ohm between A and /A, B and /B, Z and /Z.
- Please refer to the information provided by the encoder manufacturer with regard to the recommended max. cable length when taking into consideration
  - Output frequency
  - Supply voltage
  - Operating temperature

– Existing interference

- The cable length from the encoder to the evaluation device including the length of the adapter cable may be a maximum of 30 m.

When calculating the maximum cable length, remember that the length of the adapter cable must also be taken into account.

Connect encoder

Encoder types:

- TTL single ended
- HTL single ended

Please note:

- Tracks/A, /B, Z and /Z must remain free

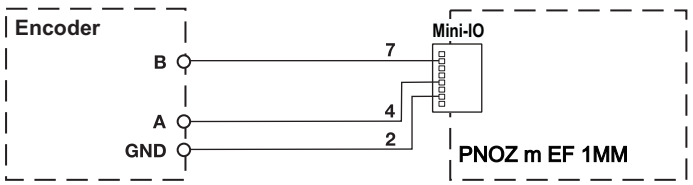

Encoder types:

- TTL Differential
- HTL differential
- sin/cos 1 Vss
- Hiperface

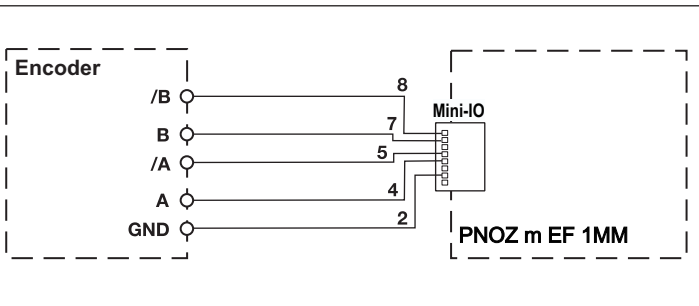

Connect encoder with Z index

Encoder types:

- TTL single ended Z Index
- HTL single ended Z Index

Please note:

- Tracks /A, /B and /Z must remain free

Motion monitoring modules
PNOZ m EF 1MM2DO

- When using the encoder type sin/cos 1 Vss Z Index, the length of the encoder cable may be max. 30 m.

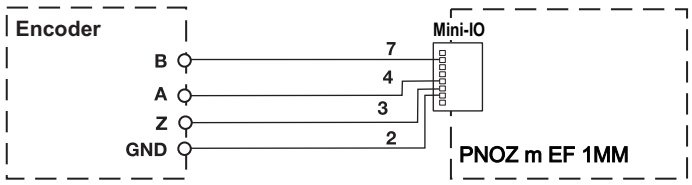

Encoder types:

- TTL differential + Z Index
- HTL differential + Z Index
- sin/cos 1 Vss Z Index

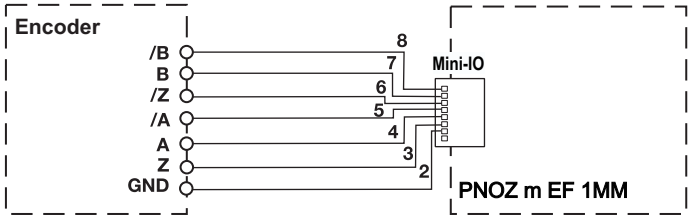

Connect encoder via an adapter

The adapter (see Accessories [📖 948]) is connected between the encoder and the drive. The output on the adapter is connected to the Mini-IO socket on the PNOZ m EF 1MM2DO.

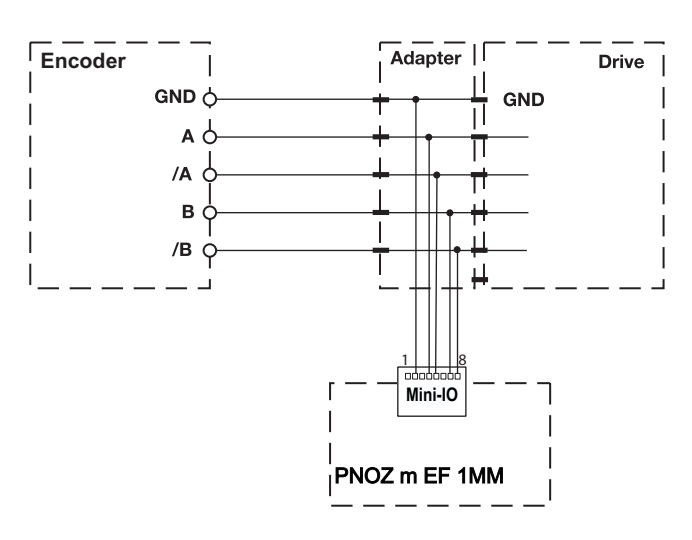

Motion monitoring modules
PNOZ m EF 1MM2DO

Connection of proximity switch and encoder

When connecting the encoders and proximity switches, please refer to the chapter entitled "EMC-compliant wiring".

Sensor types:

- Configuration: HTL single Z Freq. Ini pnp
  - HTL single ended (A,B) + Ini pnp (Z)
  - HTL single ended (A,B) + HTL differential (A as Z)
  - HTL single ended (A,B) + HTL single ended (A as Z)
- Configuration: TTL single Z Freq. Ini pnp
  - TTL single ended (A,B) + Ini pnp (Z)
  - TTL single ended (A,B) + HTL differential (A as Z)
  - TTL single ended (A,B) + HTL single ended (A as Z)

Please note:
Tracks /A, /B and /Z must remain free.

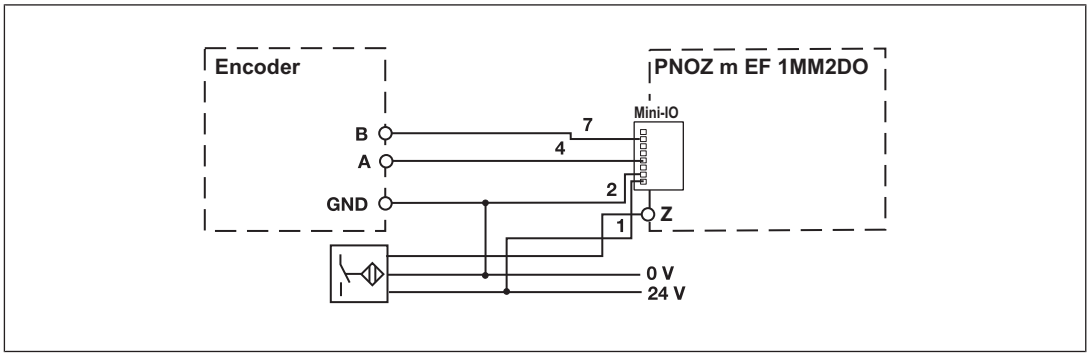

Sensor types:

- Configuration: TTL differential Z Freq. Ini pnp
  - TTL differential (A,/A,B,/B) + Ini pnp (Z)
  - TTL differential (A,/A,B,/B) + HTL differential (A as Z)
  - TTL differential (A,/A,B,/B) + HTL single ended (A as Z)
- Configuration: HTL differential Z Freq. Ini pnp
  - HTL differential (A,/A,B,/B) + Ini pnp (Z)
  - HTL differential (A,/A,B,/B) + HTL differential (A as Z)
  - HTL differential (A,/A,B,/B) + HTL single ended (A as Z)
- Configuration: sin/cos 1 Vss Z Freq. Ini pnp
  - sin/cos 1 Vss (A,/A,B,/B) + Ini pnp (Z)
  - sin/cos 1 Vss (A,/A,B,/B) + HTL differential (A as Z)
  - sin/cos 1 Vss (A,/A,B,/B) + HTL single ended (A as Z)

Motion monitoring modules
PNOZ m EF 1MM2DO

- Configuration: Hiperface Z Freq. Ini pnp
  - Hiperface (A,/A,B,/B) + Ini pnp (Z)
  - Hiperface (A,/A,B,/B) + HTL differential (A as Z)
  - Hiperface (A,/A,B,/B) + HTL single ended (A as Z)

Please note:
Track /Z must remain free!!

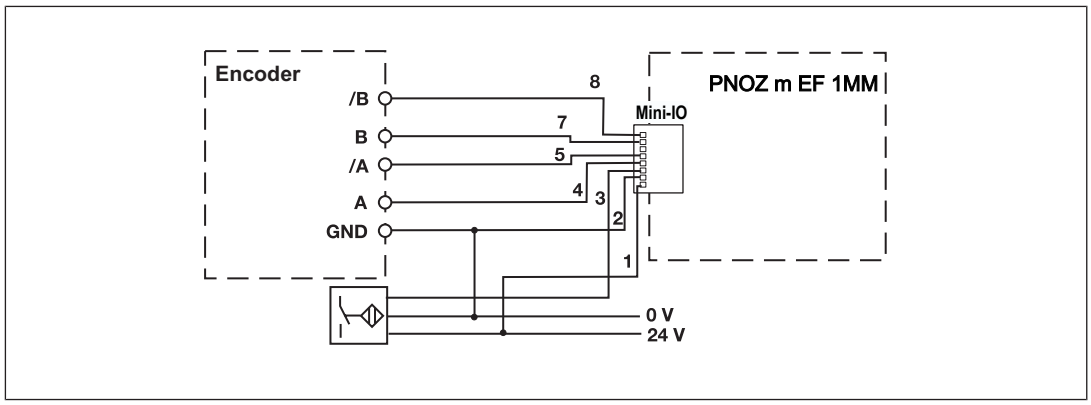

Motion monitoring modules
PNOZ m EF 1MM2DO

EMC-compliant wiring

EMC-compliant wiring for connecting an encoder

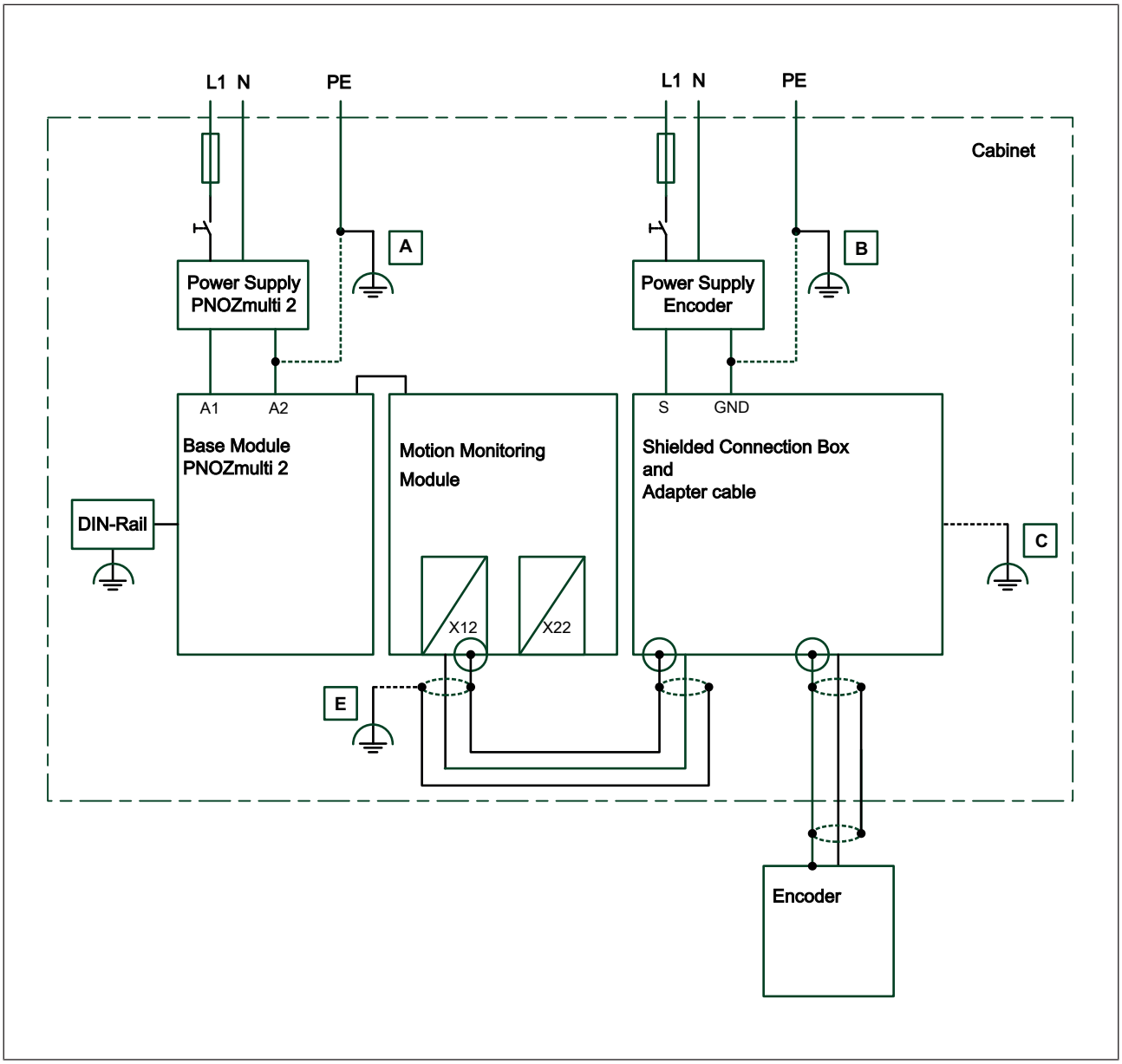

To avoid EMC interference we recommend that the shield on the sensor cable is connected to earth at **C** or **E**. However, depending on the application, it may be helpful to establish the connection to functional earth at another point (in this case **A** or **B**).
Conductor loops outside the shield must be avoided.
If a shielded junction box is not used, the shield must run continuously from the sensor to the evaluation device.

Motion monitoring modules
PNOZ m EF 1MM2DO

EMC-compliant wiring for connecting an encoder with drive

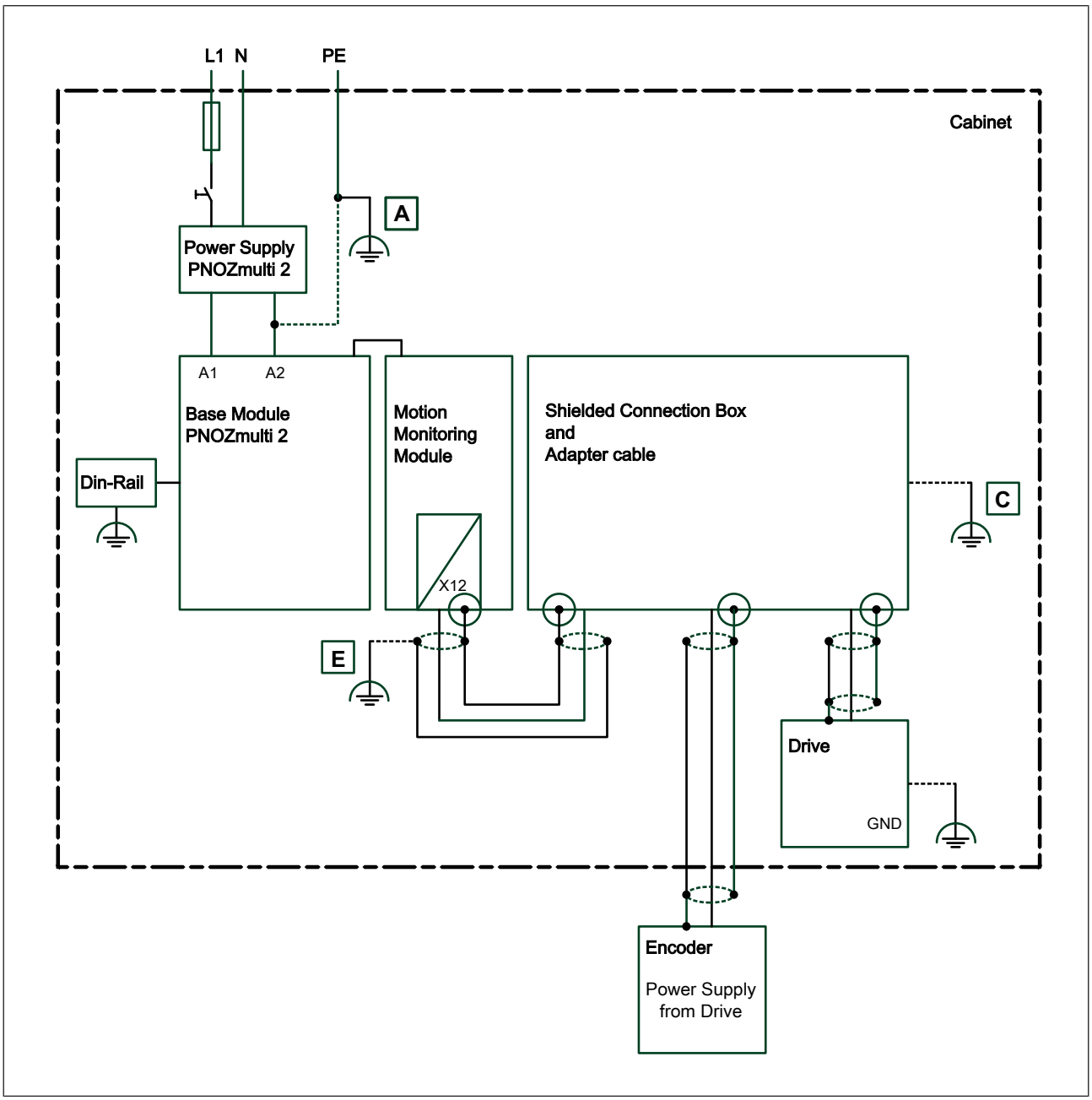

To avoid EMC interference we recommend that the shield on the sensor cable is connected to earth at **C** or **E**. However, depending on the application, it may be helpful to establish the connection to functional earth at another point (in this case **A**).
Conductor loops outside the shield must be avoided.
If a shielded junction box is not used, the shield must run continuously from the sensor to the evaluation device.

Motion monitoring modules
PNOZ m EF 1MM2DO

EMC-compliant wiring for connecting 2 proximity switches

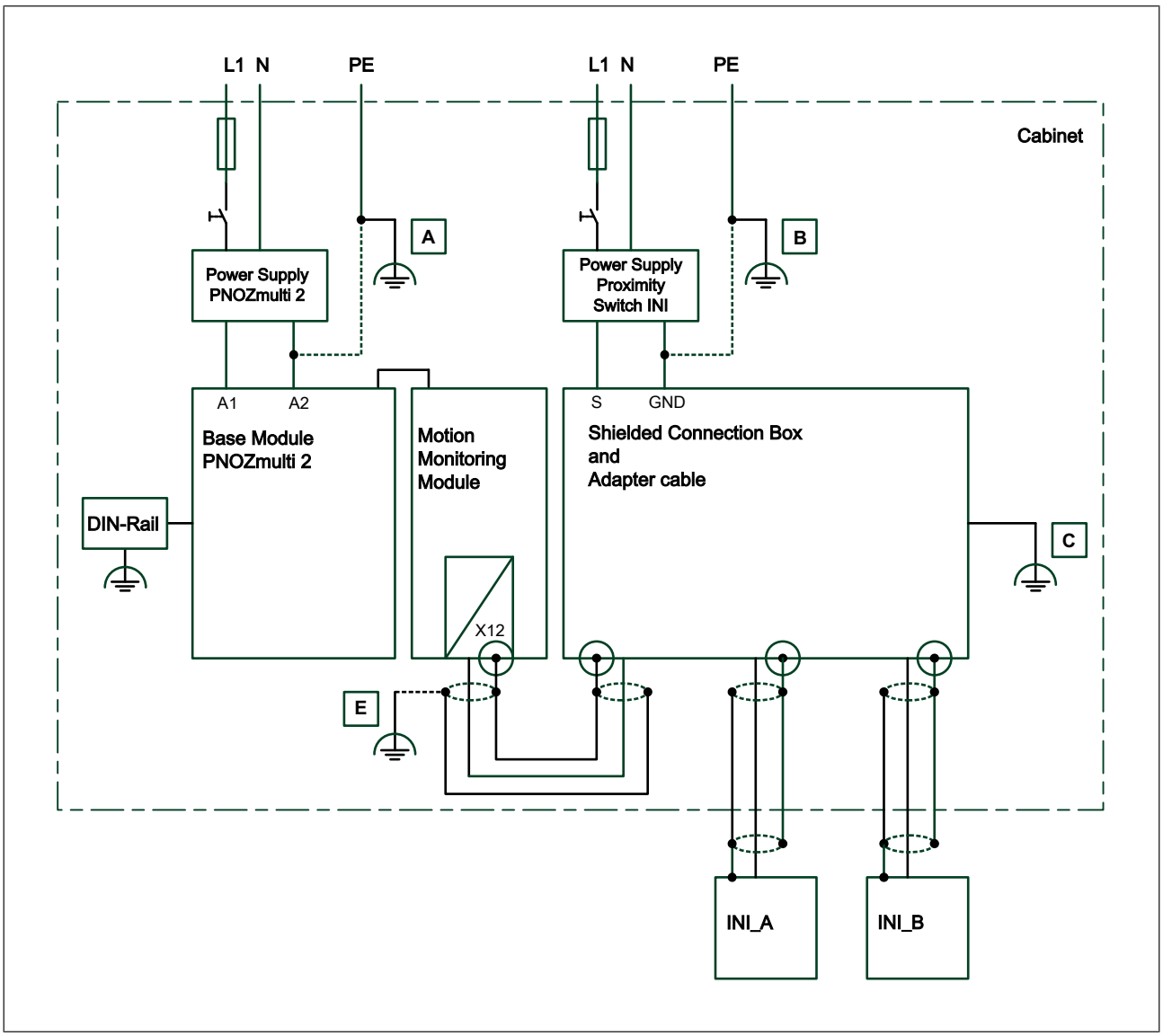

To avoid EMC interference we recommend that the shield on the sensor cable is connected to earth at **C** or **E**. However, depending on the application, it may be helpful to establish the connection to functional earth at another point (in this case **A** or **B**).
Conductor loops outside the shield must be avoided.
If a shielded junction box is not used, the shield must run continuously from the sensor to the evaluation device.

Motion monitoring modules
PNOZ m EF 1MM2DO

EMC-compliant wiring for connecting an encoder and a proximity switch

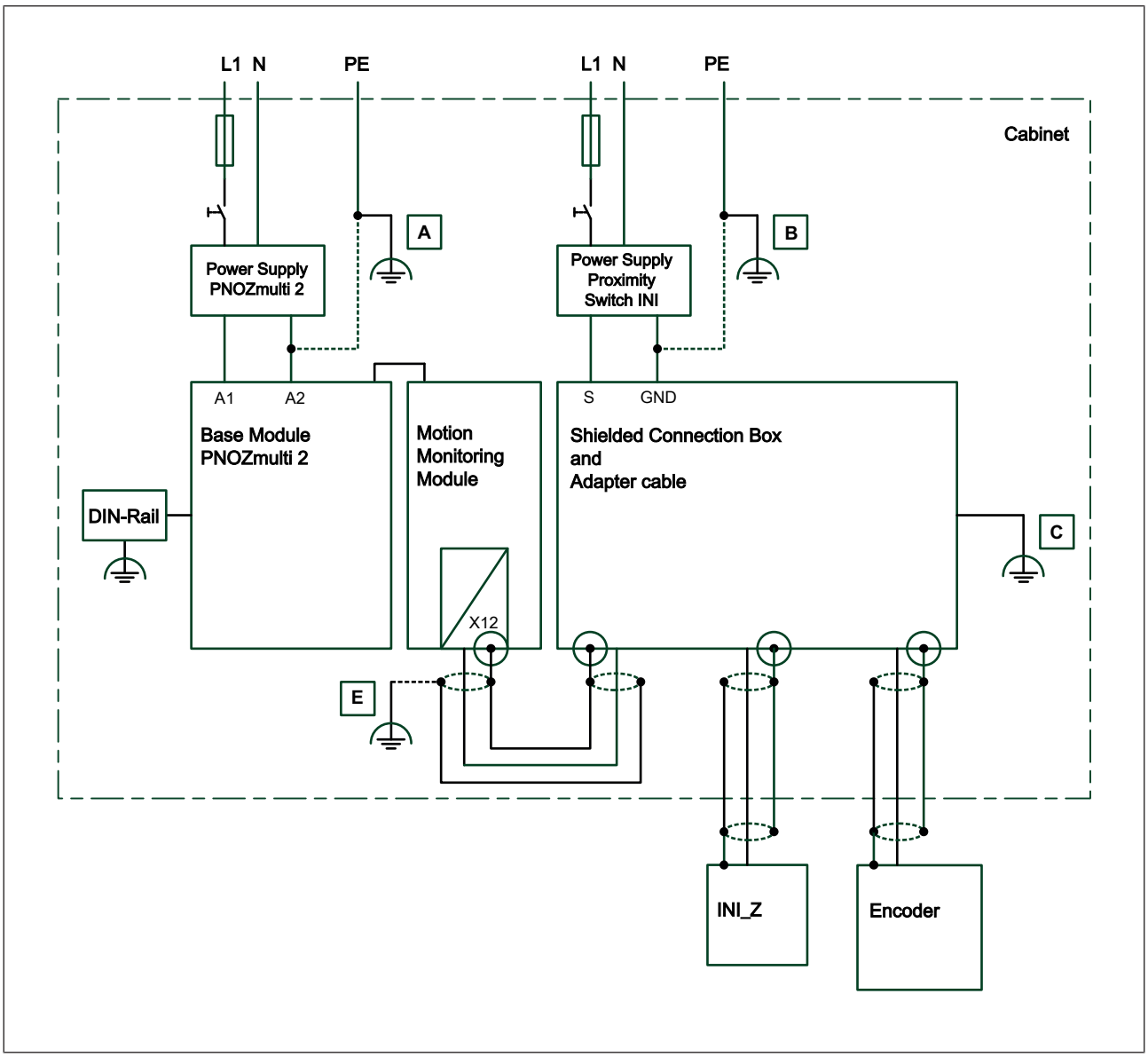

To avoid EMC interference we recommend that the shield on the sensor cable is connected to earth at **C** or **E**. However, depending on the application, it may be helpful to establish the connection to functional earth at another point (in this case **A** or **B**).
Conductor loops outside the shield must be avoided.
If a shielded junction box is not used, the shield must run continuously from the sensor to the evaluation device.

Maintenance and testing

It is not necessary to perform maintenance work on the product in normal operation. Please return any faulty products to Pilz.

Motion monitoring modules
PNOZ m EF 1MM2DO

Technical details

General	
Certifications	**CE, TÜV**
Application range	**Failsafe**
Module's device code	**00E8h**
Electrical data	
Supply voltage	
for	**Supply to sensor evaluation, Supply to the SC outputs**
Voltage	**24 V**
Kind	**DC**
Voltage tolerance	**-20 %/+25 %**
Max. continuous current that the external power supply must provide	**1,6 A**
Output of external power supply (DC)	**2,1 W**
Potential isolation	**yes**
Supply voltage	
for	**Module supply**
internal	**Via base unit**
Voltage	**24 V**
Kind	**DC**
Current consumption	**40 mA**
Power consumption	**0,9 W**
Max. power dissipation of module	**5 W**
Status indicator	**LED**
Permitted loads	**inductive, capacitive, resistive**
Proximity switch input	
Number of inputs	**2**
Input signal level	
Signal level at "1"	**11 - 30 V**
Signal level at "0"	**0,0 - 3,0 V**
Input resistance	**22 kOhm**
Input's frequency range	**0 - 5 kHz**
Configurable monitoring frequency	
Without hysteresis	**0,1 Hz - 5 kHz**
Incremental encoder input	
Number of inputs	**1**
Connection type	**Mini-IO female connector, 8-pin**
Input signal level	**0,5 - 30 Vss**
Phase position for the differential signals A, /A and B,/B	**90° ±30°**

Motion monitoring modules
PNOZ m EF 1MM2DO

Incremental encoder input	
Overload protection	**-50 - 65 V**
Input resistance	**20 kOhm**
Input's frequency range	**0 - 500 kHz**
Configurable monitoring frequency	
Without hysteresis	**0,1 Hz - 500 kHz**
Semiconductor outputs	
Number of positive-switching single-pole semiconductor outputs	**2**
Switching capability	
Voltage	**24 V**
Typ. output current at "1" signal and rated voltage of semiconductor output	**0,5 A**
Permitted current range	**0,000 - 0,600 A**
Residual current at "0" signal	**0,02 mA**
Max. transient pulsed current	**3 A**
Max. capacitive load	**1 µF**
Max. internal voltage drop	**500 mV**
Max. duration of off time during self test	**200 µs**
Switch-off delay	**1 ms**
Potential isolation	**yes**
Short circuit-proof	**yes**
Semiconductor outputs (standard)	
Number	**1**
Switching capability	
Voltage	**24 V**
Current	**0,5 A**
Galvanic isolation	**yes**
Switch-off delay	**1 ms**
Short circuit-proof	**yes**
Cascading output as standard output	
Number	**1**
Switching capability	
Voltage	**24 V**
Galvanic isolation	**yes**
Short circuit-proof	**yes**
Times	
Reaction time after limit value is exceeded	**1/f_ist + 10ms**

Motion monitoring modules
PNOZ m EF 1MM2DO

Environmental data	
Ambient temperature	
In accordance with the standard	**EN 60068-2-14**
Temperature range	**0 - 60 °C**
Forced convection in control cabinet off	**55 °C**
Storage temperature	
In accordance with the standard	**EN 60068-2-1/-2**
Temperature range	**-25 - 70 °C**
Climatic suitability	
In accordance with the standard	**EN 60068-2-30, EN 60068-2-78**
Condensation during operation	**Not permitted**
Max. operating height above sea level	**2000 m**
EMC	**EN 61131-2**
Vibration	
In accordance with the standard	**EN 60068-2-6**
Frequency	**5 - 150 Hz**
Acceleration	**1g**
Shock stress	
In accordance with the standard	**EN 60068-2-27**
Acceleration	**15g**
Duration	**11 ms**
Airgap creepage	
In accordance with the standard	**EN 61131-2**
Overvoltage category	**II**
Pollution degree	**2**
Protection type	
In accordance with the standard	**EN 60529**
Housing	**IP20**
Terminals	**IP20**
Mounting area (e.g. control cabinet)	**IP54**
Potential isolation	
Potential isolation between	**Sensor and system voltage**
Type of potential isolation	**Functional insulation**
Rated insulation voltage	**30 V**
Rated surge voltage	**2500 V**
Potential isolation between	**SC output and system voltage**
Type of potential isolation	**Basic insulation**
Rated insulation voltage	**30 V**
Rated surge voltage	**2500 V**
Mechanical data	
Mounting position	**horizontally on mounting rail**

Motion monitoring modules
PNOZ m EF 1MM2DO

Mechanical data	
DIN rail	
Top hat rail	**35 x 7,5 EN 50022**
Recess width	**27 mm**
Material	
Bottom	**PC**
Front	**PC**
Top	**PC**
Connection type	**Spring-loaded terminal, screw terminal**
Mounting type	**plug-in**
Conductor cross section with screw terminals	
1 core flexible	**0,25 - 2,5 mm², 24 - 12 AWG**
2 core with the same cross section, flexible without crimp connectors or with TWIN crimp connectors	**0,2 - 1,5 mm², 24 - 16 AWG**
Torque setting with screw terminals	**0,5 Nm**
Conductor cross section with spring-loaded terminals: Flexible with/without crimp connector	**0,2 - 2,5 mm², 24 - 12 AWG**
Spring-loaded terminals: Terminal points per connection	**2**
Stripping length with spring-loaded terminals	**9 mm**
Dimensions	
Height	**101,4 mm**
Width	**22,5 mm**
Depth	**120 mm**
Weight	**131 g**

Where standards are undated, the 2019-12 latest editions shall apply.

Safety characteristic data

Unit	Operating mode	EN ISO 13849-1: 2015 PL	EN ISO 13849-1: 2015 Category	EN 62061 SIL CL	EN 62061 PFH_D [1/h]	EN ISO 13849-1: 2015 T_M [year]
Logic						
CPU	**2-channel**	**PL e**	**Cat. 4**	**SIL CL 3**	**3,54E-10**	**20**
Output						
SC outputs	**1-channel**	**PL d**	**Cat. 2**	**SIL CL 2**	**5,43E-11**	**20**

Motion monitoring modules
PNOZ m EF 1MM2DO

Output						
SC outputs	**1-channel with advanced fault detection**	**PL e**	**Cat. 4**	**SIL CL 3**	**1,49E-11**	**20**
SC outputs	**2-channel**	**PL e**	**Cat. 4**	**SIL CL 3**	**4,30E-11**	**20**

Explanatory notes for the safety-related characteristic data:

- The SIL CL value in accordance with EN 62061 corresponds to the SIL value in accordance with EN 61508.
- T_M is the maximum mission time in accordance with EN ISO 13849-1. The value also applies as the retest interval in accordance with EN 61508-6 and IEC 61511 and as the proof test interval and mission time in accordance with EN 62061.

All the units used within a safety function must be considered when calculating the safety characteristic data.

Classification according to ZVEI, CB24I

The following tables describe the classes and specific values of the product interface and the classes of interfaces compatible with it. The classification is described in the ZVEI position paper "Classification of Binary 24 V Interfaces - Functional Safety aspects covered by dynamic testing".

Single-pole output	
Interfaces	
Source	
Interface	**Module**
Class	**C2**
Drain	
Interface	**Actuator**
Class	**C1, C2**
Source parameters	
Max. test pulse duration	**200 µs**
Max. rated current	**0,5 A**
Max. capacitive load	**1 µF**

Motion monitoring modules
PNOZ m EF 1MM2DO

Order reference

Product

Product type	Features	Order no.
PNOZ m EF 1MM2DO	Expansion module	772 172

Accessories

Connection terminals

Product type	Features	Order No.
Set spring terminals	1 set of spring-loaded terminals	751 004
Set screw terminals	1 set of screw terminals	750 004

Terminator, jumper

Product type	Features	Order no.
PNOZ mm0.xp connector left	Jumper yellow/black to connect the modules, 10 pieces	779 260

Adapter cable

Product type	Features	Order no.
MM A MINI-IO CAB99	1.50 m	772200
MM A MINI-IO CAB99	2.50 m	772201
MM A MINI-IO CAB99	5.0 m	772202

Product type	Features	Order no.
PNOZ msi b4 Box	Connection box	773 845

Link modules
PNOZ m EF Multi Link



Overview

Unit features

Application of the product PNOZ m EF Multi Link:

Link module to safely connect two configurable small control systems PNOZmulti.

The product has the following features:

- Connection options: Two base units of the configurable small control systems PNOZmulti
- Can be configured in the PNOZmulti Configurator
- Point-to-point connection via 4-core shielded, twisted-pair cable
- 32 virtual inputs and 32 virtual outputs
- Status indicators
- Max. 4 PNOZ m EF Multi Link can be connected to the base unit
- LED indicators for
  - Operating status
  - Error
  - Connection status
- Plug-in connection terminals:
  Either spring-loaded terminal or screw terminal available as an accessory (see Order references for accessories [📖 772]).

Link modules
PNOZ m EF Multi Link

Front view

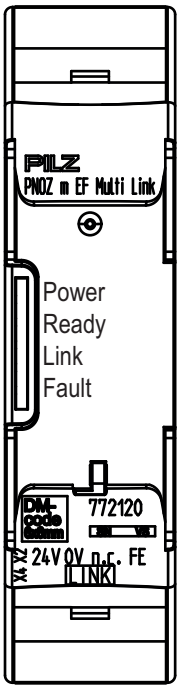

Legend:

- X2:
  - 0 V, 24 V:Supply connections
  - FE: Functional earth
- Link:
  Connection
- LEDs:
  - Power
  - Ready
  - Link
  - Fault

Link modules
PNOZ m EF Multi Link

Function Description

Functions

The link module PNOZ m EF Multi Link is used to safely transfer the input information from 32 virtual inputs and 32 virtual outputs between two PNOZmulti systems. One link module is assigned to each base unit. Data is exchanged cyclically.

The function of the inputs and outputs on the control system depends on the safety circuit created using the PNOZmulti Configurator. A chip card is used to download the safety circuit to the base unit. The base unit has 2 microcontrollers that monitor each other. They evaluate the input circuits on the base unit and expansion modules and switch the outputs on the base unit and expansion modules accordingly.

The LEDs on the base unit and expansion modules indicate the status of the configurable control system PNOZmulti.

The online help on the PNOZmulti Configurator contains descriptions of the operating modes and all the functions of the control system, plus connection examples.

Data exchange:

- Data is exchanged cyclically.
- After the end of a PNOZmulti cycle, each base unit sends its output data to its link module. This output data is immediately sent to the link module on the other base unit.
- At the same time, the base unit reads the input data from the link module.

Connection of multiple base units:

Any number of base units can be connected via link modules. Two link modules are required for a connection between two base units. However, only a maximum of 4 link modules may be connected to any one base unit.

Virtual inputs and outputs:

Inputs and outputs for both PNOZmulti systems are assigned in the PNOZmulti Configurator. Inputs and outputs with the same number are assigned to each other, e.g. output o5 on one PNOZmulti system to input i5 on the other PNOZmulti system.

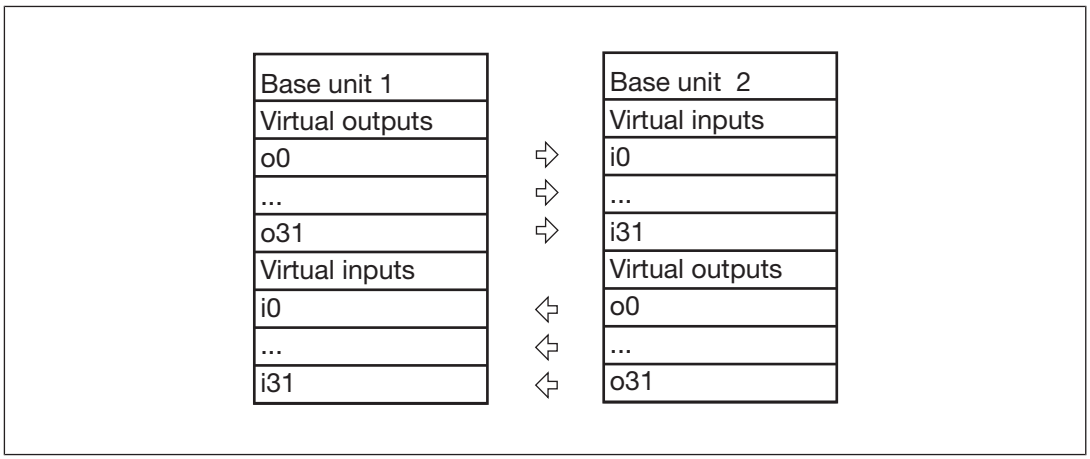

Link modules
PNOZ m EF Multi Link

System reaction time

Calculation of the maximum reaction time between an input switching off and a linked output in the system switching off is described in the document "System Expansion".

Block diagram

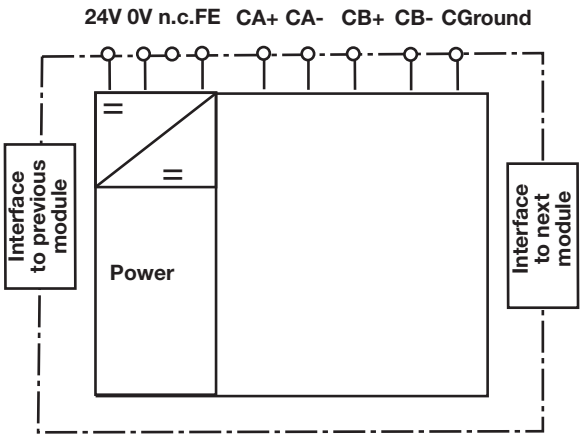

Installation

Dimensions in mm

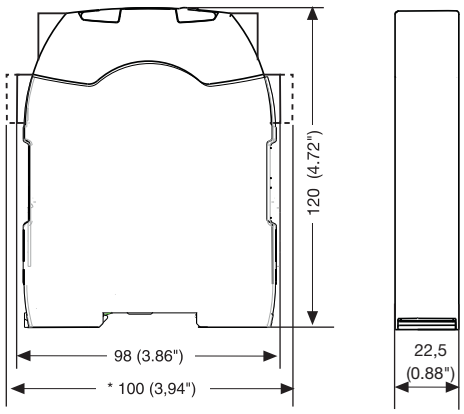

Link modules
PNOZ m EF Multi Link

Commissioning

Wiring

The wiring is defined in the circuit diagram of the PNOZmulti Configurator.

Please note:

- Information given in the Technical details [📖 954] must be followed.
- The position of the expansion module is specified in the Hardware configuration of the PNOZmulti Configurator.
- Use copper wiring with a temperature stability of 75 °C.
- The power supply must meet the regulations for extra low voltages with protective electrical separation (SELV, PELV).
- 2 connection terminals are available for each of the supply connections 24 V and 0 V. This means that the supply voltage can be looped through several connections. The current at each terminal may not exceed 3 A.
- The max. cable length between two link modules on a connection with one link module
  - PNOZ ml1p <V2.0: 100 m
  - PNOZ ml1p from V2.0, PNOZ mml1p, PNOZ m EF Multi Link: 1000 m
- Connect the inputs and outputs from two link modules with a 4-core shielded cable. The cables must be twisted in pairs.
- Note the crossover cabling, e.g. CA+ with CB+.
- The cables must be classified into a minimum of Category 5 in accordance with ISO/IEC 11801.

Connection

RJ45 socket 8-pin	PIN	Layout
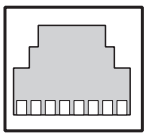	1	CA+
	2	CA-
	3	CB+
	4	n.c.
	5	n.c.
	6	CB-
	7	n.c.
	8	n.c.
	Shield	CGround

Link modules
PNOZ m EF Multi Link

Supply voltage	AC	DC
	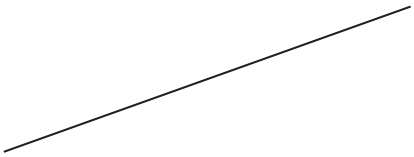	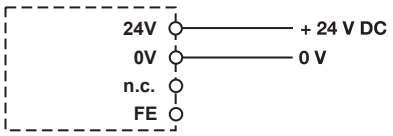

Connecting 2 base units PNOZmulti 2 via PNOZ m EF Multi Link

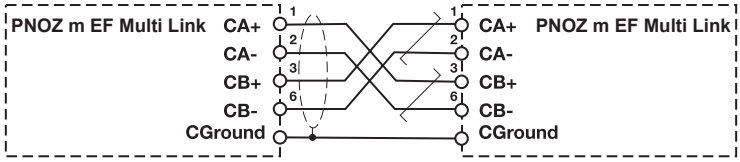

Technical details

General	
Certifications	**CE, EAC (Eurasian), KOSHA, TÜV, cULus Listed**
Application range	**Failsafe**
Electrical data	
Supply voltage	
for	**Module supply**
Voltage	**24 V**
Kind	**DC**
Voltage tolerance	**-15 %/+20 %**
Output of external power supply (DC)	**2,5 W**
Potential isolation	**yes**
Supply voltage	
for	**Module supply**
internal	**Via base unit**
Voltage	**3,3 V**
Kind	**DC**
Current consumption	**60 mA**
Power consumption	**0,2 W**
Max. power dissipation of module	**3 W**
Status indicator	**LED**
Fieldbus interface	
Galvanic isolation	**yes**
Times	
Max. data transmission time	**5 ms**

Link modules
PNOZ m EF Multi Link

Environmental data	
Ambient temperature	
In accordance with the standard	**EN 60068-2-14**
Temperature range	**0 - 60 °C**
Storage temperature	
In accordance with the standard	**EN 60068-2-1/-2**
Temperature range	**-25 - 70 °C**
Climatic suitability	
In accordance with the standard	**EN 60068-2-30, EN 60068-2-78**
Condensation during operation	**Not permitted**
Max. operating height above sea level	**2000 m**
EMC	**EN 61131-2**
Vibration	
In accordance with the standard	**EN 60068-2-6**
Frequency	**5 - 55 Hz**
Acceleration	**1g**
Shock stress	
In accordance with the standard	**EN 60068-2-27**
Acceleration	**15g**
Duration	**11 ms**
Airgap creepage	
In accordance with the standard	**EN 61131-2**
Overvoltage category	**II**
Pollution degree	**2**
Protection type	
In accordance with the standard	**EN 60529**
Housing	**IP20**
Terminals	**IP20**
Mounting area (e.g. control cabinet)	**IP54**
Potential isolation	
Potential isolation between	**Module and supply voltage**
Type of potential isolation	**Functional insulation**
Rated insulation voltage	**30 V**
Rated surge voltage	**2500 V**
Potential isolation between	**Module and system voltage**
Type of potential isolation	**Functional insulation**
Rated insulation voltage	**30 V**
Rated surge voltage	**2500 V**
Mechanical data	
Mounting position	**horizontally on mounting rail**

Link modules
PNOZ m EF Multi Link

Mechanical data	
DIN rail	
Top hat rail	**35 x 7,5 EN 50022**
Recess width	**27 mm**
Material	
Bottom	**PC**
Front	**PC**
Top	**PC**
Connection type	**Spring-loaded terminal, screw terminal**
Mounting type	**plug-in**
Conductor cross section with screw terminals	
1 core flexible	**0,25 - 2,5 mm², 24 - 12 AWG**
2 core with the same cross section, flexible without crimp connectors or with TWIN crimp connectors	**0,2 - 1,5 mm², 24 - 16 AWG**
Torque setting with screw terminals	**0,5 Nm**
Conductor cross section with spring-loaded terminals: Flexible with/without crimp connector	**0,2 - 2,5 mm², 24 - 12 AWG**
Spring-loaded terminals: Terminal points per connection	**2**
Stripping length with spring-loaded terminals	**9 mm**
Dimensions	
Height	**101,4 mm**
Width	**22,5 mm**
Depth	**120 mm**
Weight	**91 g**

Where standards are undated, the 2013-01 latest editions shall apply.

Safety characteristic data

Operating mode	EN ISO 13849-1: 2015 PL	EN ISO 13849-1: 2015 Category	EN 62061 SIL CL	EN 62061 PFH_D [1/h]	IEC 61511 SIL	IEC 61511 PFD	EN ISO 13849-1: 2015 T_M [year]
2-channel	**PL e**	**Cat. 4**	**SIL CL 3**	**8,82E-09**	**SIL 3**	**3,86E-05**	**20**

Explanatory notes for the safety-related characteristic data:

- The SIL CL value in accordance with EN 62061 corresponds to the SIL value in accordance with EN 61508.
- T_M is the maximum mission time in accordance with EN ISO 13849-1. The value also applies as the retest interval in accordance with EN 61508-6 and IEC 61511 and as the proof test interval and mission time in accordance with EN 62061.

Link modules
PNOZ m EF Multi Link

All the units used within a safety function must be considered when calculating the safety characteristic data.

Order reference

Product

Product type	Features	Order no.
PNOZ m EF Multi Link	Expansion module	772 120

Accessories

Connection terminals

Product type	Features	Order no.
Spring terminals PNOZ mmc2p, mml1p 1 pc.	Spring-loaded terminals, 1 piece	783 538
Spring terminals PNOZ mmc2p,mml1p 10 pcs	Spring-loaded terminals, 10 pieces	783 539
Screw terminals PNOZ mmc2p, mml1p 1 pc.	Screw terminals, 1 piece	793 538
Screw terminals PNOZ mmc2p,mml1p 10 pcs.	Screw terminals, 10 piece	793 539

Terminator, jumper

Product type	Features	Order no.
PNOZ mm0.xp connector left	Jumper yellow/black to connect the modules, 10 pieces	779 260

Link modules
PNOZ m EF PDP Link

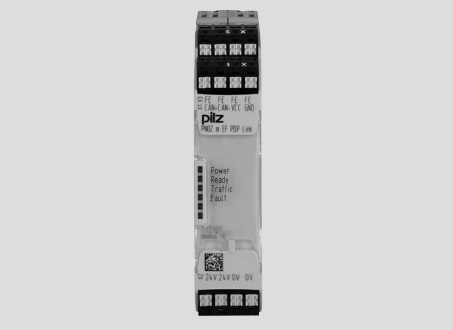

Overview

Unit features

Application of the product PNOZ m EF PDP Link:

Link module to safely connect decentralised input/output modules to a configurable control system PNOZmulti 2

The product has the following features:

- Can be configured in the PNOZmulti Configurator
- Max. 4 PNOZ m EF PDP Link can be connected to the base unit
- Max. 4 decentralised modules can be connected to the link module PNOZ m EF PDP Link
- LEDs for
  - Operating state
  - Error
  - Connection status
- Plug-in connection terminals:
  Either spring-loaded terminal or screw terminal available as an accessory (see Order references for accessories [📖 772]).

Link modules
PNOZ m EF PDP Link

Front view

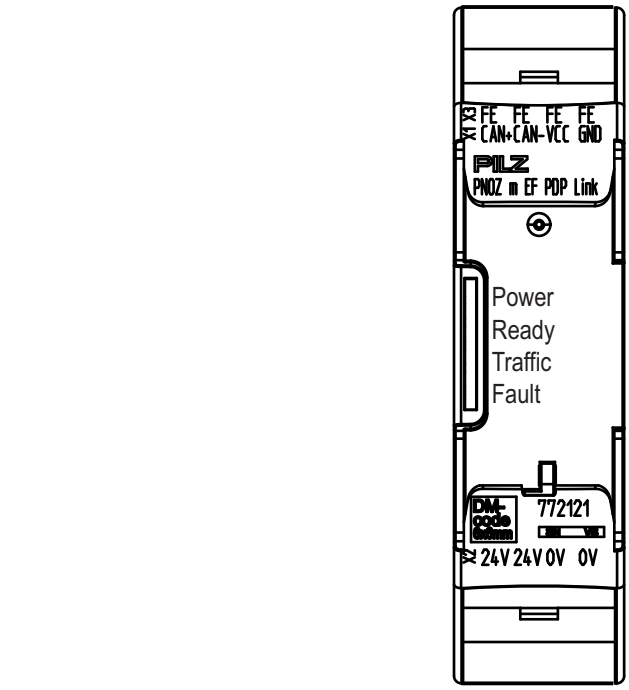

Legend:

- 0 V, 24 V:
  Supply connections
- CAN+, CAN-, VCC, GND:
  Connection for decentralised modules
- FE:
  Functional earth

Function description

Functions

The link module PNOZ m EF PDP Link is used to safely transfer the input information from decentralised modules to the control system PNOZmulti 2.

The function of the inputs and outputs on the control system depends on the safety circuit created using the PNOZmulti Configurator. A chip card is used to download the safety circuit to the base unit. The base unit has 2 microcontrollers that monitor each other. They evaluate the input circuits on the base unit and expansion modules and switch the outputs on the base unit and expansion modules accordingly.

The LEDs on the base unit and expansion modules indicate the status of the configurable control system PNOZmulti.

Link modules
PNOZ m EF PDP Link

The online help on the PNOZmulti Configurator contains descriptions of the operating modes and all the functions of the control system, plus connection examples.

Data exchange:

- Communication with the decentralised modules is via a safe data link.
- The link module PNOZ m EF PDP Link reads the input information from the decentralised modules as part of each cycle and then forwards it to the base unit.
- At the end of a PNOZmulti cycle, the base unit sends its output data to its link module. This output data is immediately sent to the decentralised modules.

Linking several decentralised modules:

- A maximum of 4 link modules can be connected to a base unit PNOZmulti 2.
- A maximum of 4 decentralised modules can be connected to a link module PNOZ m EF PDP Link.
- If a decentralised module receives data intended for a different decentralised module that is connected, the data is forwarded without being processed.

System reaction time

Calculation of the maximum reaction time between an input switching off and a linked output in the system switching off is described in the document "PNOZmulti System Expansion [30]".

Block diagram

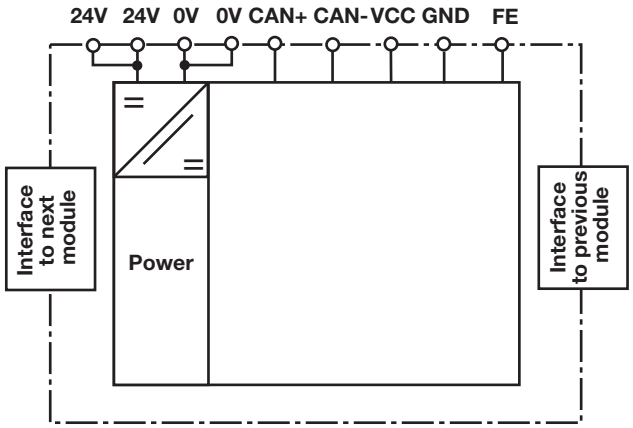

Link modules
PNOZ m EF PDP Link

Installation

Dimensions in mm

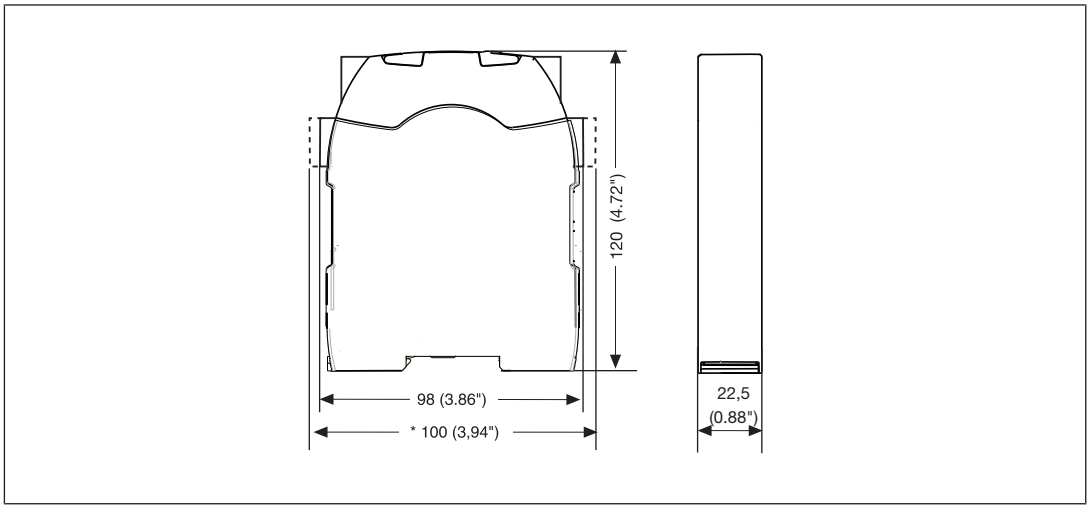

Commissioning

Wiring

The wiring is defined in the circuit diagram of the PNOZmulti Configurator.

Please note:

- Information given in the Technical details [📖 965] must be followed.
- The position of the expansion module is specified in the Hardware configuration of the PNOZmulti Configurator.
- Use copper wiring with a temperature stability of 75 °C.
- External measures must be used to connect the FE terminal to the functional earth (e.g. mounting rail).
- The power supply must meet the regulations for extra low voltages with protective electrical separation (SELV, PELV).
- 2 connection terminals are available for each of the supply connections 24 V and 0 V. This means that the supply voltage can be looped through several connections. The current at each terminal may not exceed 3 A.
- Please refer to the technical details for information on the maximum cable length. Please also read the section entitled "Voltage drop".
- With a cable length of 30 m or above, or in environments with strong interfaces, shielded cables must be used.

Link modules
PNOZ m EF PDP Link

- If there are signal interferences/EMC problems that are to be expected or present, we recommend that you use a shielded cable from the beginning. In addition, you can place the braided shield of the cables directly next to the device via a shielded terminal to the functional earth (mounting rail).
- Pilz pre-assembled cable can be used to connect the decentralised modules (see order reference).
- The plug-in connection terminals are either designed as cage clamp terminals or screw terminals (see order reference).

Insulation voltage test

The product PNOZ m EF PDP Link is connected to functional earth ⏚ via protection elements on the supply voltage. Insulation voltage tests are only possible with voltages up to ca. 42 V.

Connection

Supply voltage	AC	DC
	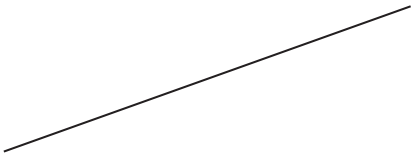	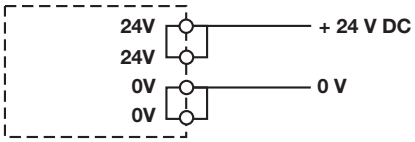

Connection to a decentralised input module PDP67 when using the PSEN op cable axial M12 5-pole from Pilz (see order reference)

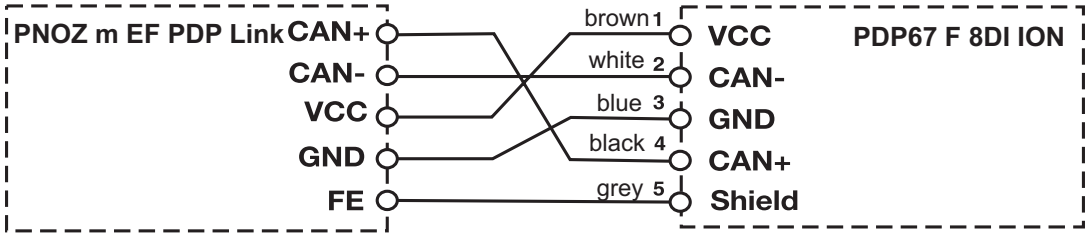

Connection when using the PSS SB BUSCABLE LC in conjunction with a Pilz self-assembly "PSS67 M12 connector" (see order reference in the Technical Catalogue)

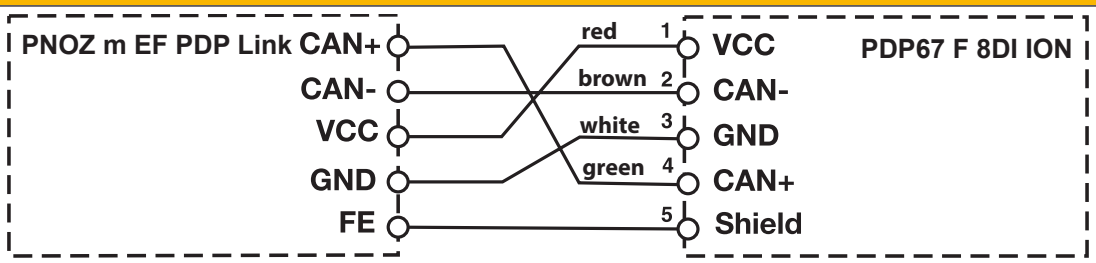

Link modules
PNOZ m EF PDP Link

Download modified project to the PNOZmulti safety system

As soon as an additional expansion module has been connected to the system, the project must be amended in the PNOZmulti Configurator and downloaded back into the base unit. Proceed as described in the operating manual for the base unit.

Series connection of 4 decentralised modules

You can connect up to 4 decentralised modules in series to a PNOZmulti link module.

The cable length between every connection must be max. 100 m (see Technical details [965]).

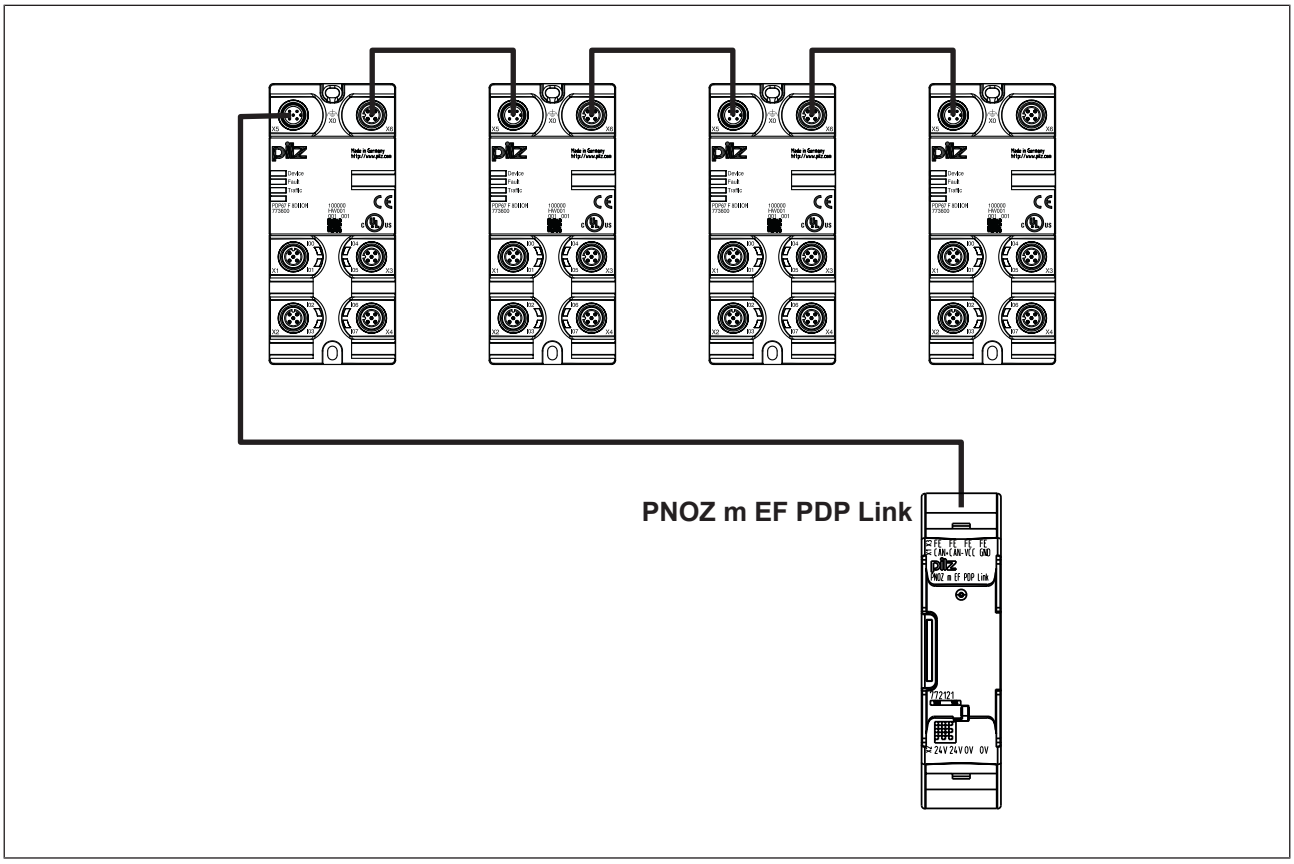

Voltage drop

The max. cable length depends on the voltage drop in the supply voltage cables. The level of voltage drop is determined by the:

- Cable resistance on the supply voltage cables
- Operating current of the modules
- Load on the modules

To increase the max. cable length, the input voltage can be permanently increased by the voltage tolerance (see Technical Details).

Link modules
PNOZ m EF PDP Link

Guidelines for various cable types

Cable type	Voltage drop per 10 m and per 100 mA
PSS SB BUSCABLE LC	0.1 V
Sensor cable 0.25 mm^2	0.15 V
Sensor cable 0.34 mm^2	0.11 V
Sensor cable 0.5 mm^2	0.07 V

Calculation example

- The PSS SB BUSCABLE LC is used in accordance with the pin assignment in section 6.2.2.
  Voltage drop per 10 m and per 100 mA: 0.1 V

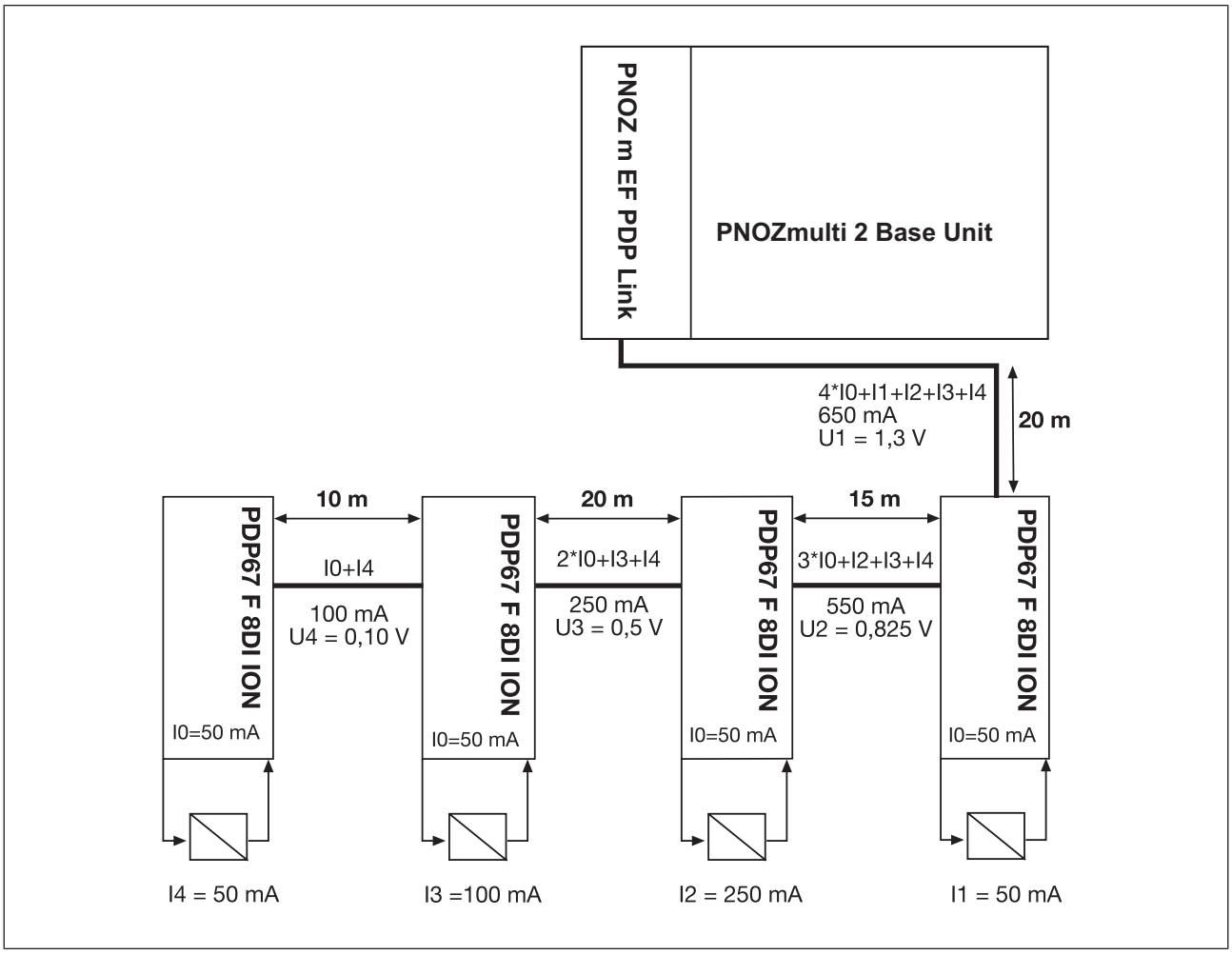

Legend:

- I0: Module's consumption.
- I1 ... I5: Load current taken from the module

Link modules
PNOZ m EF PDP Link

- U1 … U4: Voltage drop on the respective connection path

Total voltage drop from the link module PNOZ m EF PDP Link to the final PDP67 F 8DI ION:

$U_{total} = U_1 + U_2 + U_3 + U_4$

$U_{total} = 1.3\ V + 0.825\ V + 0.5\ V + 0.10\ V = 2.725\ V$

Technical details

General	
Certifications	**CE, EAC (Eurasian), KOSHA, TÜV, cULus Listed**
Application range	**Failsafe**
Electrical data	
Supply voltage	
for	**Module supply**
Voltage	**24 V**
Kind	**DC**
Voltage tolerance	**-15 %/+20 %**
Output of external power supply (DC)	**100 W**
Output of external power supply (DC) at no load	**2,5 W**
Supply voltage	
for	**Module supply**
internal	**Via base unit**
Voltage	**3,3 V**
Kind	**DC**
Current consumption	**60 mA**
Power consumption	**0,2 W**
Max. power dissipation of module	**4 W**
Status indicator	**LED**
Inputs	
Maximum input delay	**15 ms**
Semiconductor outputs	
Switch-off delay	**5 ms**
Test pulse outputs	
Maximum output current, decentralised module supply	**4 A**
Short circuit protection of decentralised module supply	**yes**
Environmental data	
Ambient temperature	
In accordance with the standard	**EN 60068-2-14**
Temperature range	**0 - 60 °C**

Link modules
PNOZ m EF PDP Link

Environmental data	
Storage temperature	
In accordance with the standard	**EN 60068-2-1/-2**
Temperature range	**-25 - 70 °C**
Climatic suitability	
In accordance with the standard	**EN 60068-2-30, EN 60068-2-78**
Condensation during operation	**Not permitted**
Max. operating height above sea level	**2000 m**
EMC	**EN 61131-2**
Vibration	
In accordance with the standard	**EN 60068-2-6**
Frequency	**5 - 55 Hz**
Acceleration	**1g**
Shock stress	
In accordance with the standard	**EN 60068-2-27**
Acceleration	**15g**
Duration	**11 ms**
Airgap creepage	
In accordance with the standard	**EN 61131-2**
Overvoltage category	**II**
Pollution degree	**2**
Protection type	
In accordance with the standard	**EN 60529**
Housing	**IP20**
Terminals	**IP20**
Mounting area (e.g. control cabinet)	**IP54**
Potential isolation	
Potential isolation between	**Module and system voltage**
Type of potential isolation	**Functional insulation**
Rated insulation voltage	**30 V**
Rated surge voltage	**2500 V**
Mechanical data	
Mounting position	**horizontally on mounting rail**
DIN rail	
Top hat rail	**35 x 7,5 EN 50022**
Recess width	**27 mm**
Max. cable length unshielded	**30 m**
Max. cable length shielded	**100 m**
Material	
Bottom	**PC**
Front	**PC**
Top	**PC**

Link modules
PNOZ m EF PDP Link

Mechanical data	
Connection type	**Spring-loaded terminal, screw terminal**
Mounting type	**plug-in**
Conductor cross section with screw terminals	
1 core flexible	**0,25 - 2,5 mm², 24 - 12 AWG**
2 core with the same cross section, flexible without crimp connectors or with TWIN crimp connectors	**0,2 - 1,5 mm², 24 - 16 AWG**
Torque setting with screw terminals	**0,5 Nm**
Conductor cross section with spring-loaded terminals: Flexible with/without crimp connector	**0,2 - 2,5 mm², 24 - 12 AWG**
Spring-loaded terminals: Terminal points per connection	**2**
Stripping length with spring-loaded terminals	**9 mm**
Dimensions	
Height	**101,4 mm**
Width	**22,5 mm**
Depth	**120 mm**
Weight	**96 g**

Where standards are undated, the 2013-01 latest editions shall apply.

Safety characteristic data

Operating mode	EN ISO 13849-1: 2015 PL	EN ISO 13849-1: 2015 Category	EN 62061 SIL CL	EN 62061 PFH_D [1/h]	IEC 61511 SIL	IEC 61511 PFD	EN ISO 13849-1: 2015 T_M [year]
–	**PL e**	**Cat. 4**	**SIL CL 3**	**5,35E-09**	**SIL 3**	**3,30E-05**	**20**

Explanatory notes for the safety-related characteristic data:

- The SIL CL value in accordance with EN 62061 corresponds to the SIL value in accordance with EN 61508.
- T_M is the maximum mission time in accordance with EN ISO 13849-1. The value also applies as the retest interval in accordance with EN 61508-6 and IEC 61511 and as the proof test interval and mission time in accordance with EN 62061.

All the units used within a safety function must be considered when calculating the safety characteristic data.

Link modules
PNOZ m EF PDP Link

Order reference

Product

Product type	Features	Order no.
PNOZ m EF PDP Link	Link module	772 121

Accessories

Connection terminals

Product type	Features	Order No.
Spring terminals PNOZ mml2p 1 pc.	Spring-loaded terminals, 1 piece	783 540
Spring terminals PNOZ mml2p 10 pcs.	Spring-loaded terminals, 10 pieces	783 541
Screw terminals PNOZ mml2p 1 pc.	Screw terminals, 1 piece	793 540
Screw terminals PNOZ mml2p 10 pcs.	Screw terminals, 10 pieces	793 541

Terminator, jumper

Product type	Features	Order no.
PNOZ mm0.xp connector left	Jumper yellow/black to connect the modules, 10 pieces	779 260

Cable

Product type	Features	Order No.
PSS SB BUSCABLE LC	Cable, shielded, 1 - 100 m	311074
PSS67 I/O Cable	Cable, 1 - 30 m	380 320
PSS67 Cable M8sf M12sm	Cable, straight M12 connector, straight M8 socket, 4-pin, 3 m	380 200
PSS67 Cable M8sf M12sm	Cable, straight M12 connector, straight M8 socket, 4-pin, 5 m	380 201
PSS67 Cable M8sf M12sm	Cable, straight M12 connector, straight M8 socket, 4-pin, 10 m	380 202
PSS67 Cable M8sf M12sm	Cable, straight M12 connector, straight M8 socket, 4-pin, 30 m	380 203
PSS67 Cable M8af M12sm	Cable, straight M12 connector, angled M8 socket, 4-pin, 3m	380 204

Link modules
PNOZ m EF PDP Link

Product type	Features	Order No.
PSS67 Cable M8af M12sm	Cable, straight M12 connector, angled M8 socket, 4-pin, 5 m	380 205
PSS67 Cable M8af M12sm	Cable, straight M12 connector, angled M8 socket, 4-pin, 10 m	380 206
PSS67 Cable M8af M12sm	Cable, straight M12 connector, angled M8 socket, 4-pin, 30 m	380 207
PSS67 Cable M12sf M12sm	Cable, straight M12 connector, straight M12 socket, 5-pin, 3m	380 208
PSS67 Cable M12sf M12sm	Cable, straight M12 connector, straight M12 socket, 5-pin, 5 m	380 209
PSS67 Cable M12sf M12sm	Cable, straight M12 connector, straight M12 socket, 5-pin, 10 m	380 210
PSS67 Cable M12sf M12sm	Cable, straight M12 connector, straight M12 socket, 5-pin, 20 m	380 220
PSS67 Cable M12sf M12sm	Cable, straight M12 connector, straight M12 socket, 5-pin, 30 m	380 211
PSS67 Cable M12af M12am	Cable, angled M12 connector, angled M12 socket, 5-pin, 3m	380 212
PSS67 Cable M12af M12am	Cable, angled M12 connector, angled M12 socket, 5-pin, 5 m	380 213
PSS67 Cable M12af M12am	Cable, angled M12 connector, angled M12 socket, 5-pin, 10 m	380 214
PSS67 Cable M12af M12am	Cable, angled M12 connector, angled M12 socket, 5-pin, 30 m	380 215
PSEN op cable axial M12 5-pole 3m	Cable, straight, M12, 5-pin, open-ended socket, 3 m	630310
PSEN op cable axial M12 5-pole 5m	Cable, straight, M12, 5-pin, open-ended socket, 5 m	630311
PSEN op cable axial M12 5-pole 10m	Cable, straight, M12, 5-pin, open-ended socket, 10 m	630312
PSEN op cable axial M12 5-pole 20m	Cable, straight, M12, 5-pin, open-ended socket, 20 m	630298
PSEN op cable axial M12 5-pole 30m	Cable, straight, M12, 5-pin, open-ended socket, 30 m	630297

Adapter

Product type	Features	Order No.
PSEN ma adapter	Adapter for connection to safety switch PSENmag	380 300
PSEN cs adapter	Adapter for connection to safety switch PSENcode	380 301
PSEN sl adapter	Adapter for connection to safety switch PSENslock	380 325

Link modules
PNOZ m EF PDP Link

Connector

Product type	Features	Order No.
PSS67 M12 connector	Connector, M12, straight, 5-pin, A-coded	380 308
PSS67 M12 connector	Socket, M12, straight, 5-pin, A-coded	380 309
PSS67 M12 connector	Connector, M12, angled, 5-pin, A-coded	380 310
PSS67 M12 connector	Socket, M12, angled, 5-pin, A-coded	380 311
PSS67 M8 connector	Connector, M8, straight, 4-pin	380 316
PSS67 M8 connector	Socket, M8, straight, 4-pin	380 317
PSS67 M8 connector	Connector, M8, angled, 4-pin	380 318
PSS67 M8 connector	Socket, M8, angled, 4-pin	380 319

Communication modules
PNOZ m ES ETH



Overview

Unit features

Application of the product PNOZ m ES ETH:

Communication module for connection to a base unit from the configurable control system PNOZmulti 2.

The product has the following features:

- Can be configured in the PNOZmulti Configurator
- 2 Ethernet interfaces
- Status indicators for supply voltage, communication and errors
- Max. 1 communication module can be connected to the left of the base unit PNOZmulti 2
- Please refer to the document "PNOZmulti System Expansion" for the PNOZmulti base units that can be connected.

Communication modules
PNOZ m ES ETH

Front view

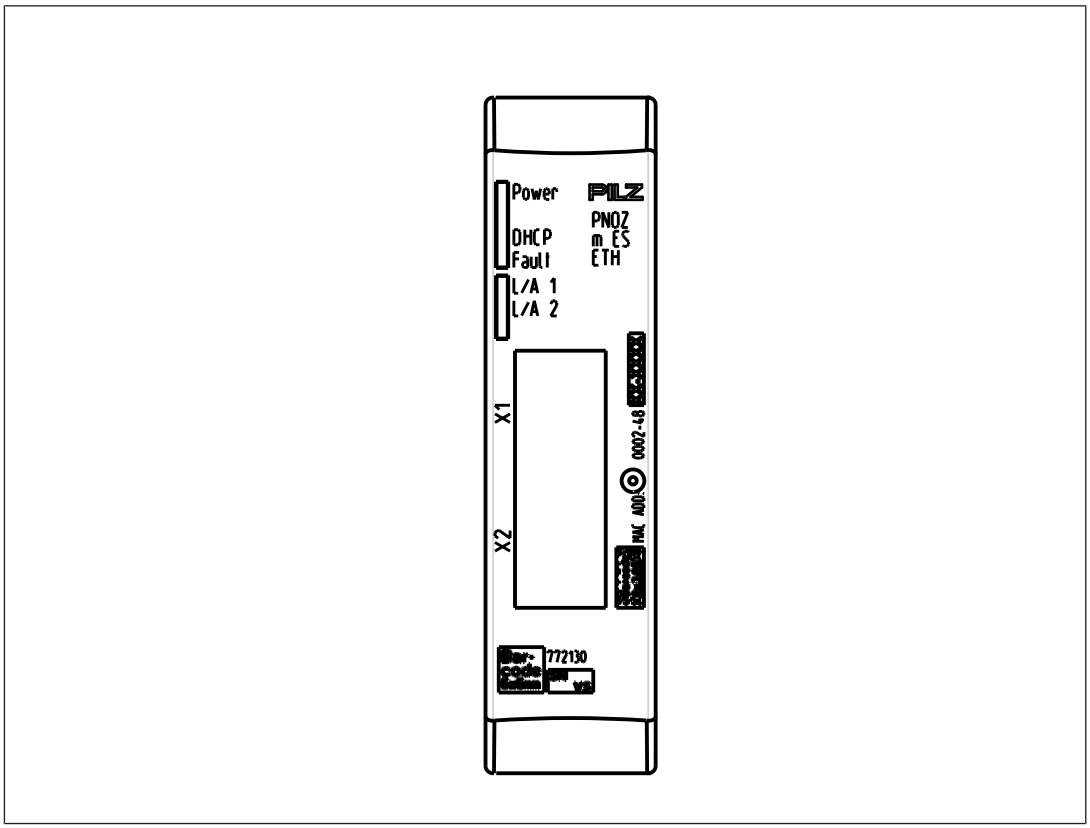

Legend:

- X1, X2:
  Ethernet interfaces
- LEDs:
  - Power
  - DHCP
  - L/A 1 (Link/‘Act 1)
  - L/A 2 (Link/Act 2)

Function description

Unit properties

The product PNOZ m ES ETH has two Ethernet interfaces to

- Download the project
- Read the diagnostic data
- Set virtual inputs for standard functions
- Read virtual outputs for standard functions

Communication modules
PNOZ m ES ETH

via Ethernet (TCP/IP, Modbus/TCP).

Information on diagnostics via the Ethernet interfaces can be found in the document entitled " PNOZmulti 2 communication interfaces".

The connection to Ethernet is made via the two 8-pin RJ45 sockets.

The Ethernet interface is configured in the PNOZmulti Configurator and is described in the online help for the PNOZmulti Configurator.

Block diagram

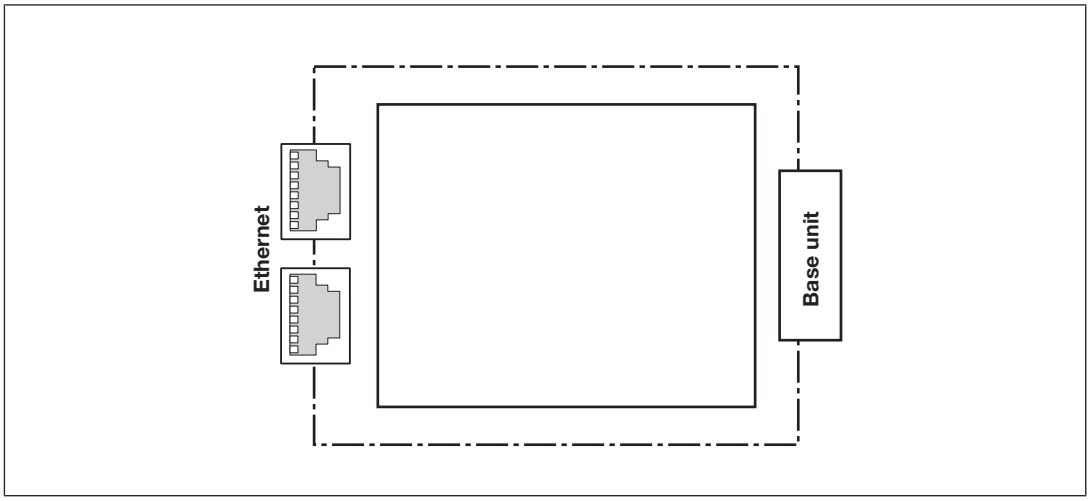

Installation

Dimensions in mm

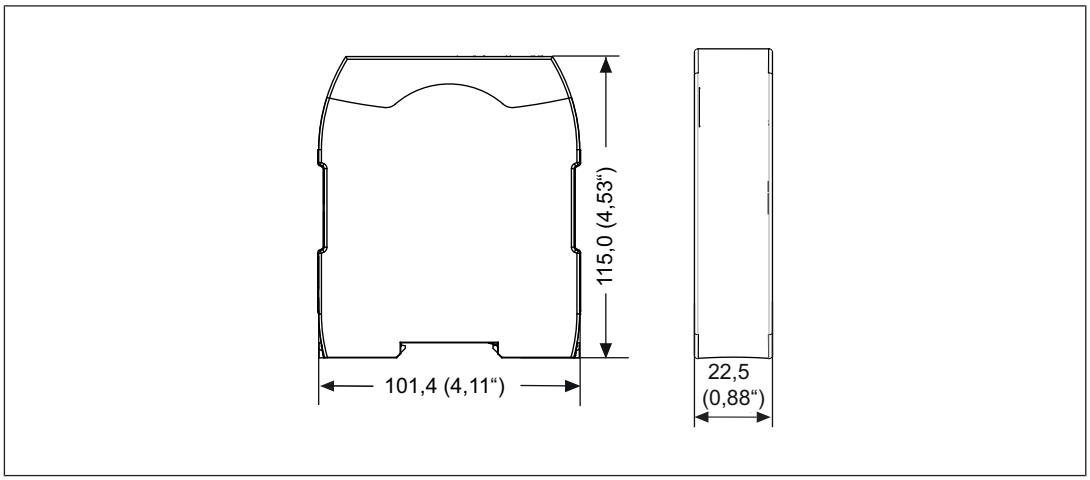

Communication modules
PNOZ m ES ETH

Commissioning

General wiring guidelines

The wiring is defined in the circuit diagram of the PNOZmulti Configurator.

Please note:

- Information given in the Technical details [974] must be followed.
- The position of the expansion module is specified in the Hardware configuration of the PNOZmulti Configurator.
- Use copper wiring with a temperature stability of 75 °C.

Preparing for operation

Detection and activation of the Ethernet interface, depending on the USB interface on the base unit:

- **USB interface on the base unit not connected**

  If the USB interface on the base unit is not connected, the Ethernet interface will be detected and activated by the base unit as soon as the communication module has been connected to the base unit.

- **USB interface on the base unit connected**

  If the USB interface on the base unit is already connected, the "Ethernet" interface will first need to be selected on the base unit display to enable the Ethernet interface on the base unit to be detected and activated (see operating manual for the base unit for details of the setting).

Tecnical details

General	
Certifications	**CE, EAC (Eurasian), cULus Listed**
Application range	**Standard**
Module's device code	**1202h**
Electrical data	
Supply voltage	
for	**Module supply**
internal	**Via base unit**
Voltage	**3,3 V**
Kind	**DC**
Voltage tolerance	**-2 %/+2 %**
Current consumption	**295 mA**
Power consumption	**1 W**
Status indicator	**LED**

Communication modules
PNOZ m ES ETH

Ethernet interface	
Number	**2**
IP address (automatically off)	**169.254.60.1**
Connection type	**RJ45**
Transmission rate	**10 MBit/s, 100 MBit/s**
Fieldbus interface	
Fieldbus interface	**Modbus/TCP**
Device type	**Slave**
Connection	**RJ45**
Galvanic isolation	**yes**
Environmental data	
Ambient temperature	
In accordance with the standard	**EN 60068-2-14**
Temperature range	**0 - 60 °C**
Forced convection in control cabinet off	**55 °C**
Storage temperature	
In accordance with the standard	**EN 60068-2-1/-2**
Temperature range	**-25 - 70 °C**
Climatic suitability	
In accordance with the standard	**EN 60068-2-30, EN 60068-2-78**
Condensation during operation	**Not permitted**
Max. operating height above sea level	**2000 m**
EMC	**EN 61131-2**
Vibration	
In accordance with the standard	**EN 60068-2-6**
Frequency	**10 - 150 Hz**
Acceleration	**1g**
Shock stress	
In accordance with the standard	**EN 60068-2-27**
Acceleration	**15g**
Duration	**11 ms**
Airgap creepage	
In accordance with the standard	**EN 61131-2**
Overvoltage category	**II**
Pollution degree	**2**
Protection type	
In accordance with the standard	**EN 60529**
Housing	**IP20**
Terminals	**IP20**
Mounting area (e.g. control cabinet)	**IP54**

Communication modules
PNOZ m ES ETH

Potential isolation	
Potential isolation between	**Fieldbus and module voltage**
Type of potential isolation	**Functional insulation**
Rated insulation voltage	**30 V**
Rated surge voltage	**500 V**
Mechanical data	
Mounting position	**horizontally on mounting rail**
DIN rail	
Top hat rail	**35 x 7,5 EN 50022**
Recess width	**27 mm**
Max. cable length	
Max. cable length per input	**0,1 km**
Material	
Bottom	**PC**
Front	**PC**
Top	**PC**
Dimensions	
Height	**101,4 mm**
Width	**22,5 mm**
Depth	**111 mm**
Weight	**80 g**

Where standards are undated, the 2012-04 latest editions shall apply.

Order reference

Product

Product type	Features	Order no.
PNOZ m ES ETH	Expansion module	772 130

Accessories

Terminator, jumper

Product type	Features	Order no.
PNOZ mm0.xp connector left	Jumper yellow/black to connect the modules, 10 piece	779 260
RJ45 Connector	8-pin RJ45 male connector, straight, Cat 6a	380 401

Communication modules
PNOZ m ES RS232



Overview

Unit features

Application of the product PNOZ m ES RS232:

Communication module for connection to a base unit from the configurable control system PNOZmulti 2.

The product has the following features:

- Can be configured in the PNOZmulti Configurator
- 1 serial interface RS232
- Status indicator for supply voltage
- Max. 1 communication module can be connected to the left of the base unit PNOZmulti 2
- Plug-in connection terminals (either cage clamp terminals or screw terminals)

Communication modules
PNOZ m ES RS232

Front view

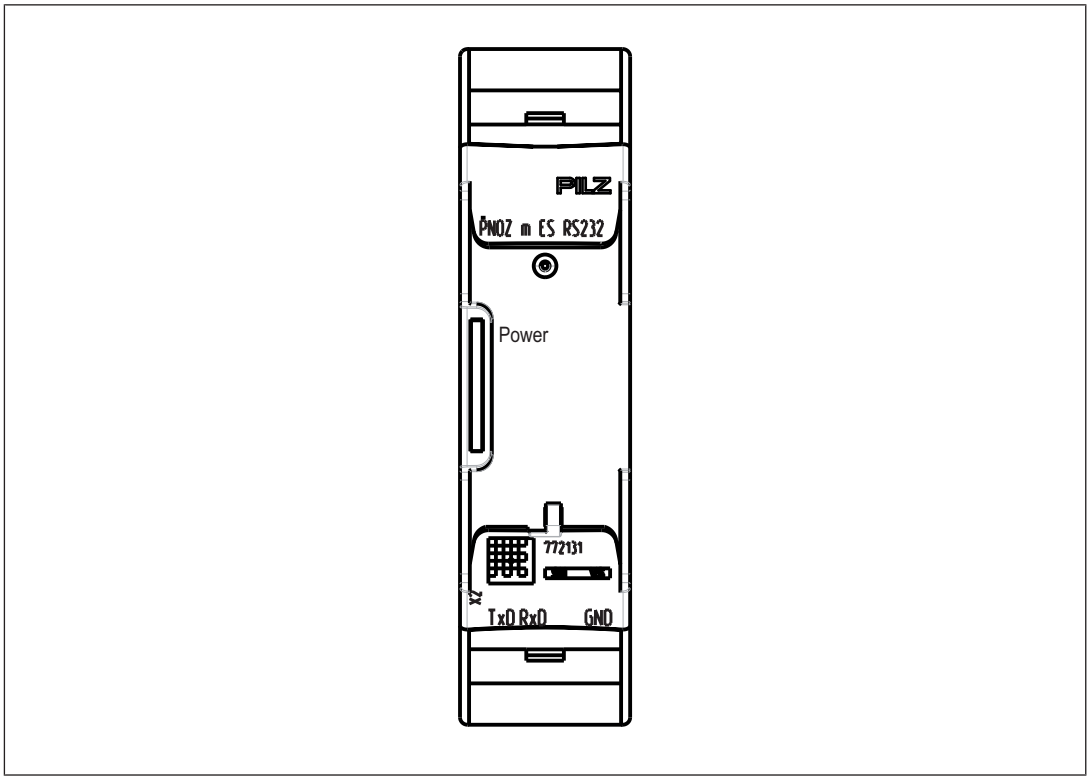

Key:

- X2: Serial interface RS 232
- LED:
  - Power

Function description

Functions

The product PNOZ m ES RS232 has a serial interface RS232 interface to

- Download the project
- Read the diagnostic data
- Set virtual inputs for standard functions
- Read virtual outputs for standard functions.

Information on diagnostics can be found in the document "Communication Interfaces".

Communication modules
PNOZ m ES RS232

Block diagram

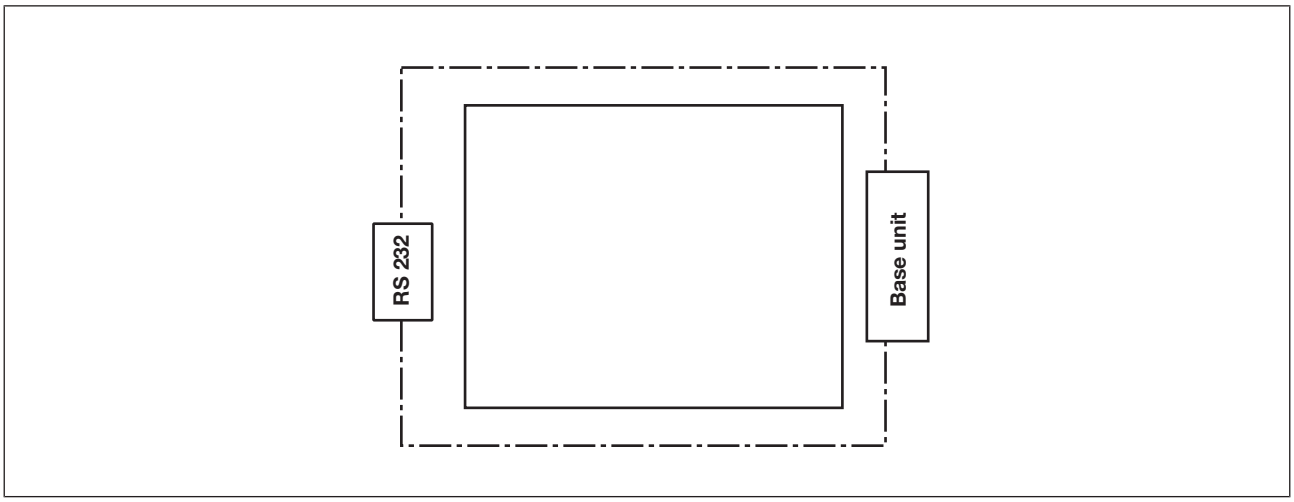

Installation

Dimensions in mm

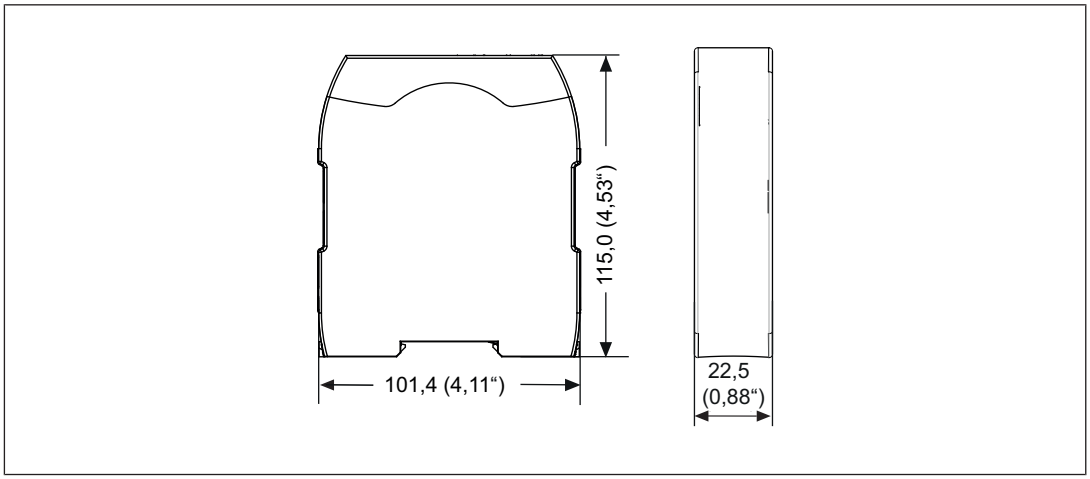

Commissioning

General wiring guidelines

The wiring is defined in the circuit diagram of the PNOZmulti Configurator.

Please note:

- Information given in the Technical details [📖 980] must be followed.
- The position of the expansion module is specified in the Hardware configuration of the PNOZmulti Configurator.
- Use copper wiring with a temperature stability of 75 °C.

Communication modules
PNOZ m ES RS232

Interface configuration

Serial interface RS232	Standard
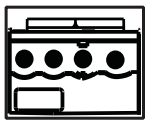	TxD (Transmit)
	RxD (Receive)
	GND (Ground)

Preparing for operation

The serial interface RS 232 is activated and detected depending on the USB interface on the base unit:

- **USB interface on the base unit not connected**

  In this case, the serial interface RS 232 will be detected and activated by the base unit as soon as the communication module has been connected to the base unit.

- **USB interface on the base unit connected**

  If the USB interface on the base unit is already connected, the "External" interface will first need to be selected on the base unit display to enable the serial interface RS 232 on the base unit to be detected and activated (see operating manual for the base unit for details of the setting).

Technical details

General	
Certifications	**CE, EAC (Eurasian), cULus Listed**
Application range	**Standard**
Electrical data	
Supply voltage	
internal	**Via base unit**
Voltage	**3,3 V**
Current consumption	**9 mA**
Power consumption	**30 mW**
Max. power dissipation of module	**30 mW**
Status indicator	**LED**
Fieldbus interface	
Galvanic isolation	**No**
Serial interface	
Number of RS232 interfaces	**1**

Communication modules
PNOZ m ES RS232

Environmental data	
Ambient temperature	
In accordance with the standard	**EN 60068-2-14**
Temperature range	**0 - 60 °C**
Forced convection in control cabinet off	**55 °C**
Storage temperature	
In accordance with the standard	**EN 60068-2-1/-2**
Temperature range	**-25 - 70 °C**
Climatic suitability	
In accordance with the standard	**EN 60068-2-30, EN 60068-2-78**
Condensation during operation	**Not permitted**
Max. operating height above sea level	**2000 m**
EMC	**EN 61131-2**
Vibration	
In accordance with the standard	**EN 60068-2-6**
Frequency	**10 - 150 Hz**
Acceleration	**1g**
Shock stress	
In accordance with the standard	**EN 60068-2-27**
Acceleration	**15g**
Duration	**11 ms**
Airgap creepage	
In accordance with the standard	**EN 61131-2**
Overvoltage category	**II**
Rated insulation voltage	**30 V**
Protection type	
In accordance with the standard	**EN 60529**
Housing	**IP20**
Terminals	**IP20**
Mounting area (e.g. control cabinet)	**IP54**
Mechanical data	
Mounting position	**horizontally on mounting rail**
DIN rail	
Top hat rail	**35 x 7,5 EN 50022**
Recess width	**27 mm**
Max. cable length	
Max. cable length per input	**22 m**
Material	
Bottom	**PC**
Front	**PC**
Top	**PC**
Connection type	**Spring-loaded terminal, screw terminal**

Communication modules
PNOZ m ES RS232

Mechanical data	
Mounting type	**plug-in**
Conductor cross section with screw terminals	
1 core flexible	**0,25 - 2,5 mm², 24 - 12 AWG**
2 core with the same cross section, flexible without crimp connectors or with TWIN crimp connectors	**0,2 - 1,5 mm², 24 - 16 AWG**
Rigid single-core, flexible multi-core or multi-core with crimp connector	**0,5 - 1,5 mm²**
Torque setting with screw terminals	**0,5 Nm**
Conductor cross section with spring-loaded terminals: Flexible with/without crimp connector	**0,2 - 2,5 mm², 24 - 12 AWG**
Spring-loaded terminals: Terminal points per connection	**2**
Stripping length with spring-loaded terminals	**9 mm**
Dimensions	
Height	**101,4 mm**
Width	**22,5 mm**
Depth	**120 mm**
Weight	**85 g**

Where standards are undated, the 2012-04 latest editions shall apply.

Order reference

Product

Product type	Features	Order no.
PNOZ m ES RS232	Expansion module	772 131

Accessories

Terminator, jumper

Product type	Features	Order no.
PNOZ mm0.xp connector left	Jumper yellow/black to connect the modules, 10 pieces	779 260

Communication modules
PNOZ m ES RS232

Connection terminals

Product type	Features	Order no.
Spring terminals PNOZ mmc2p, mml1p 1 pc.	Spring-loaded terminals, 1 piece	783 538
Spring terminals PNOZ mmc2p,mml1p 10 pcs	Spring-loaded terminals, 10 pieces	783 539
Screw terminals PNOZ mmc2p, mml1p 1 pc.	Screw terminals, 1 piece	793 538
Screw terminals PNOZ mmc2p,mml1p 10 pcs.	Screw terminals, 10 piece	793 539

Fieldbus modules
PNOZ m ES Profibus



Overview

Unit features

Application of the product PNOZ m ES Profibus:

Expansion module for connection to a base unit from the PNOZmulti 2 system.

The product has the following features:

- Can be configured in the PNOZmulti Configurator
- Connection for PROFIBUS-DP
- Station addresses from 0 ... 99, selected via rotary switch
- Status indicators for communication with PROFIBUS-DP and for errors
- In the PNOZmulti Configurator, 128 virtual outputs of the PNOZmulti 2 control system can be defined for communication with the fieldbus PROFIBUS-DP .
- Max. 1 PNOZ m ES Profibus can be connected to the base unit
- Plug-in connection terminals:
  Either spring-loaded terminal or screw terminal available as an accessory (see Order references for accessories [📖 772]).
- Please refer to the document "PNOZmulti System Expansion" for details of the base units PNOZmulti 2 that can be connected.

Fieldbus modules
PNOZ m ES Profibus

Front view

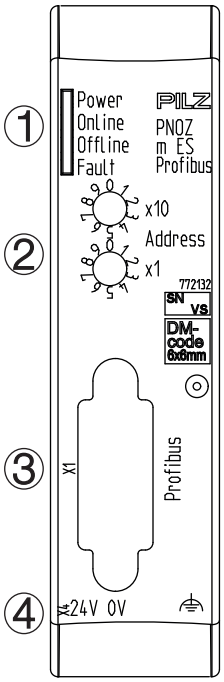

Legend

① LED:
- Power
- Online
- Offline
- Fault

② Rotary switch
- x10 = Tens digit for the station address
- x1 = Units digit for the station address

③ X1: PROFIBUS-DP interface (female 9-pin D-Sub connector)

④ X4: 0 V, 24 V:
Supply connections

⏚ Functional earth

Fieldbus modules
PNOZ m ES Profibus

Function description

Operation

The virtual inputs and outputs that are to be transferred via PROFIBUS are selected and configured in the PNOZmulti Configurator. The base unit and the expansion modulePNOZ m ES Profibus are connected via a jumper.

The station address is set via rotary switches. After the supply voltage is switched on or the control system PNOZmulti 2 is reset, the expansion module PNOZ m ES Profibus is configured and started automatically.

LEDs indicate the status of the expansion module on PROFIBUS.

The configuration is described in detail in the PNOZmulti Configurator's online help.

Data access

The data is structured as follows:

- Virtual data
  - Input area PNOZ m ES Profibus

    The values for the inputs are set in the Master as an output and transferred to the PNOZmulti 2.
  - Output area PNOZ m ES Profibus

    The outputs are configured in the PNOZmulti Configurator and transferred to the Master.
- Status of LEDs:

  LED status 1 Output Byte
  The LED status of the base unit can be requested directly as follows
  - Bit 0 = 1: LED OFAULT is lit or flashes
  - Bit 1 = 1: LED IFAULT is lit or flashes
  - Bit 2 = 1: LED FAULT is lit or flashes
  - Bit 3 = 1: LED DIAG is lit or flashes
  - Bit 4 = 1: LED RUN FS is lit
  - Bit 5: Reserved
  - Bit 6 = 1: LED RUN ST is lit (not for PNOZ m B0)
  - Bit 7: Reserved
- Data exchange is displayed in Bit 5.
- Polling the payload data: 2 Bytes with the table number and segment number are sent by the Master for access to the payload data table (15 Bytes are returned to the Master).

Fieldbus modules
PNOZ m ES Profibus

Detailed information on data exchange (tables, segments) is available in the document "Communication Interfaces" in the section entitled "Fieldbus modules".

Assigning the inputs/outputs in the PNOZmulti Configurator to the PROFIBUS-DP inputs/outputs

Virtual inputs and outputs can be requested or set directly via the following objects. Each element can be selected individually in the master control system, e.g. virtual inputs i0-31. The data width is also established this way.

Input data

The Master writes to the virtual inputs of the PNOZmulti 2.

Description	Input data from PNOZmulti 2
Virtual inputs i0 – i31	4 Input Bytes
Virtual inputs i32 – i63	4 Input Bytes
Virtual inputs i64 – i95	4 Input Bytes
Virtual inputs i96 – i127	4 Input Bytes

Output data

The Master reads the virtual outputs of the PNOZmulti 2.

Description	Output data from PNOZmulti 2
Virtual outputs o0 – o31	4 Output Bytes
Virtual outputs o32 – o63	4 Output Bytes
Virtual outputs o64 – o95	4 Output Bytes
Virtual outputs o96 – o127	4 Output Bytes

Fieldbus modules
PNOZ m ES Profibus

Block diagram

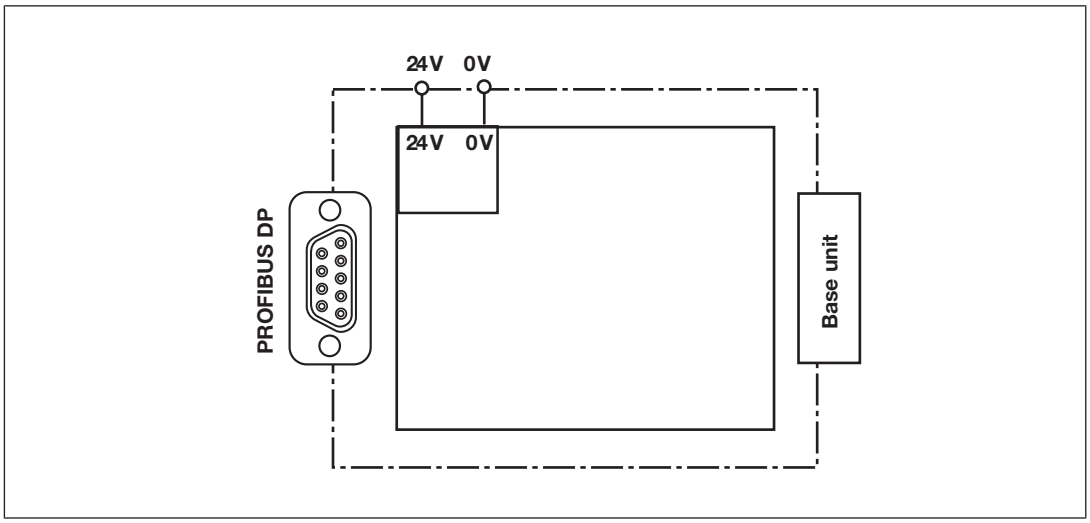

Installation

Dimensions in mm

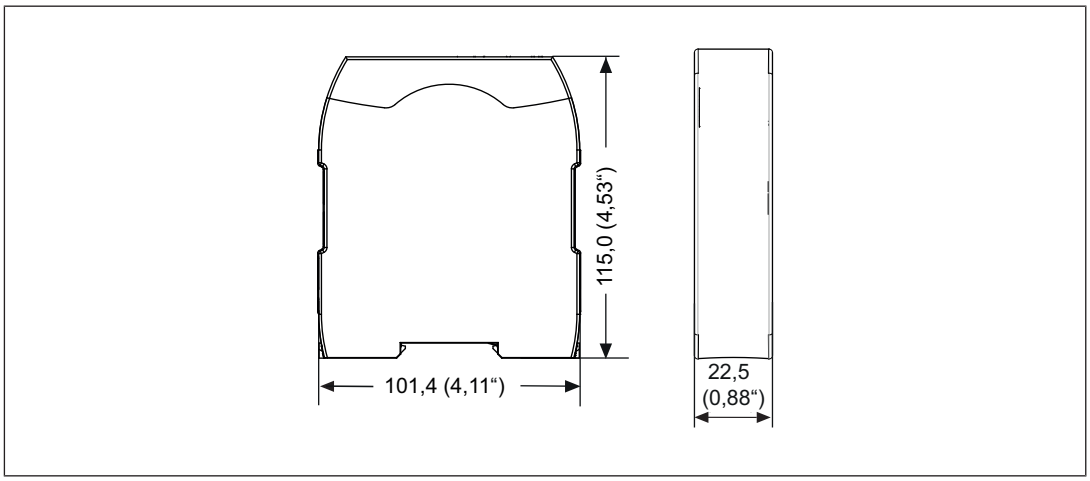

Fieldbus modules
PNOZ m ES Profibus

Commissioning

Wiring

General wiring guidelines

The wiring is defined in the circuit diagram of the PNOZmulti Configurator.

Please note:

- Information given in the Technical details [993] must be followed.
- The position of the expansion module is specified in the Hardware configuration of the PNOZmulti Configurator.
- Use copper wiring with a temperature stability of 75 °C.
- External measures must be used to connect the terminal ⏚ to the functional earth, when the mounting rail is **not** connected to the functional earth.
- Always connect the mounting rail to the protective earth via an earthing terminal. This will be used to dissipate hazardous voltages in the case of a fault.
- The power supply must meet the regulations for extra low voltages with protective electrical separation (SELV, PELV).

Connecting the supply voltage

Connect the supply voltage to the fieldbus module:

- **24 V** terminal: + 24 VDC
- **0 V** terminal: 0 V
- Protect the supply voltage as follows:
  - Circuit breaker, characteristic C - 6 A

    or
  - Blow-out fuse, slow, 6A

PROFIBUS DP interface

It is possible to define which outputs on the control system will communicate with PROFIBUS-DP. The connection to PROFIBUS-DP is made via a female 9-pin D-Sub connector in accordance with the guidelines of the PROFIBUS User Group (PNO).

Fieldbus modules
PNOZ m ES Profibus

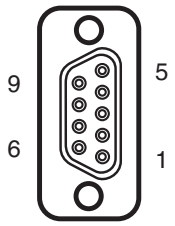

1: n.c.
2: n.c.
3: B (RxD/TxD-P)
4: CNTR-P
5: DGND
6: VP
7: n.c.
8: A (RxD/TxD-N)
9: n.c.

n.c. = not connected

Please note the following when connecting to PROFIBUS-DP:

- Only use metal plugs or metallised plastic plugs
- Twisted pair, screened cable must be used to connect the interfaces

Fieldbus modules
PNOZ m ES Profibus

Preparing for operation

Setting the station address

The station address of the expansion module PNOZ m ES Profibus is set between 0 ... 99 (decimal) via two rotary switches x1 and x10.

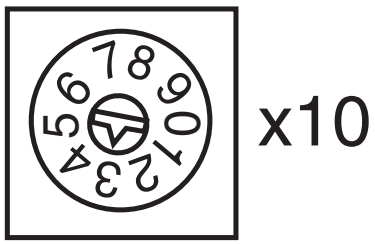

- On the upper rotary switch x10, use a small screwdriver to set the tens digit for the address (“3” in the example).

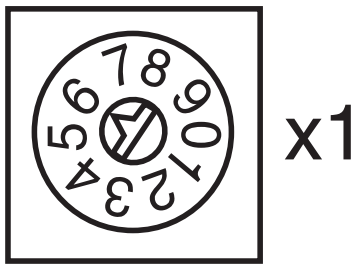

- On the lower rotary switch x1, set the ones digit for the address (“6” in the example).

Station address 36 is set in the diagrams as an example.

Download modified project to the control system PNOZmulti

As soon as an additional expansion module has been connected to the system, the project must be amended in the PNOZmulti Configurator and downloaded back into the base unit. Proceed as described in the operating manual for the base unit.

Fieldbus modules
PNOZ m ES Profibus

Connection example

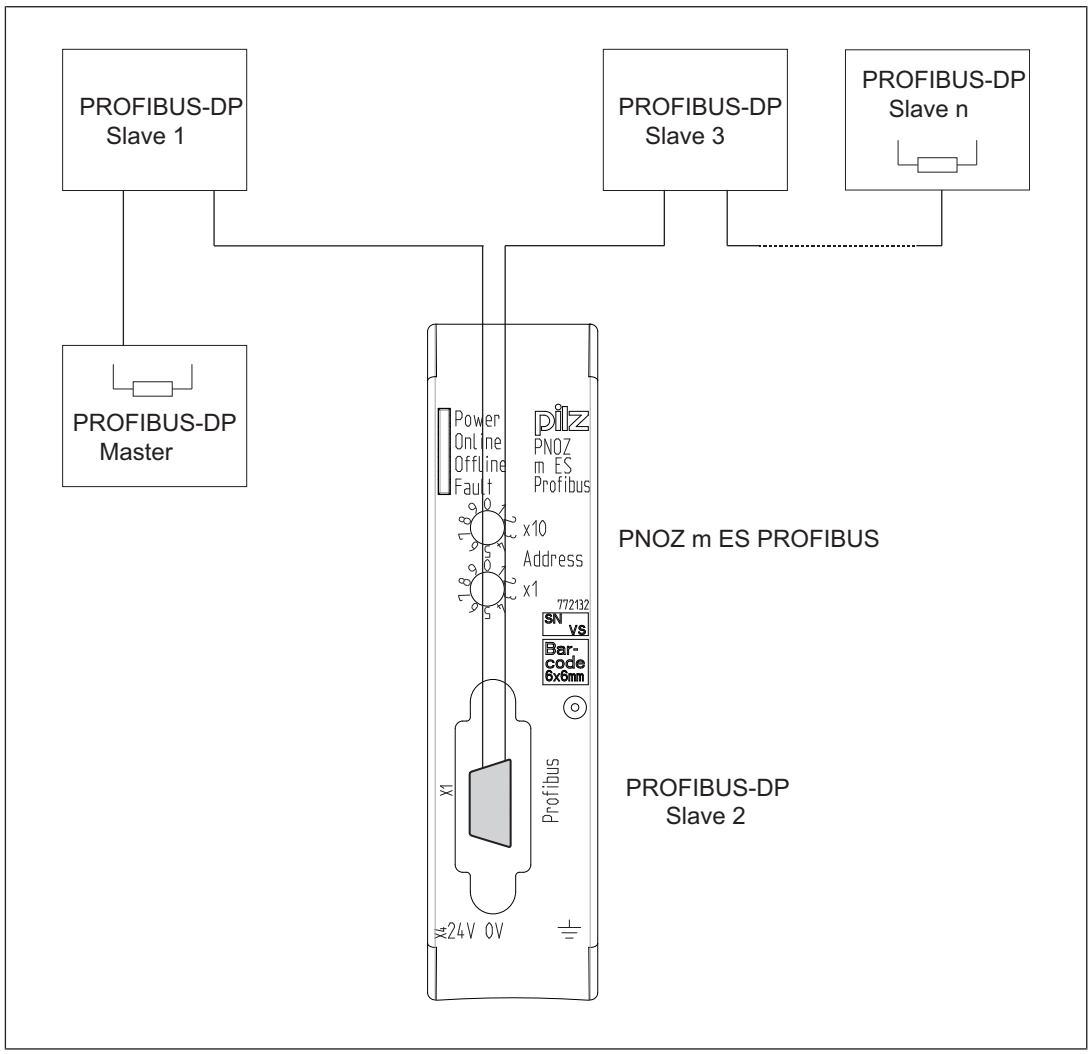

Fieldbus modules
PNOZ m ES Profibus

Technical details

General	
Certifications	**CE, EAC (Eurasian), cULus Listed**
Electrical data	
Supply voltage	
for	**Module supply**
Voltage	**24 V**
Kind	**DC**
Voltage tolerance	**-20 %/+25 %**
Max. continuous current that the external power supply must provide	**35 mA**
Output of external power supply (DC)	**0,9 W**
Potential isolation	**yes**
Supply voltage	
for	**Module supply**
internal	**Via base unit**
Voltage	**3,3 V**
Kind	**DC**
Current consumption	**60 mA**
Power consumption	**0,2 W**
Max. power dissipation of module	**1,5 W**
Status indicator	**LED**
PROFIBUS-DP interface	
Number	**1**
Fieldbus interface	
Fieldbus interface	**PROFIBUS-DP**
Device type	**Slave DPV0**
Station address	**0 - 99d**
Transmission rate	**9,6 kBit/s - 12 MBit/s**
Connection	**9-pin D-Sub female connector**
Galvanic isolation	**yes**
Test voltage	**500 V AC**
Environmental data	
Ambient temperature	
In accordance with the standard	**EN 60068-2-14**
Temperature range	**0 - 60 °C**
Forced convection in control cabinet off	**55 °C**
Storage temperature	
In accordance with the standard	**EN 60068-2-1/-2**
Temperature range	**-25 - 70 °C**

Fieldbus modules
PNOZ m ES Profibus

Environmental data	
Climatic suitability	
In accordance with the standard	**EN 60068-2-30, EN 60068-2-78**
Condensation during operation	**Not permitted**
Max. operating height above sea level	**2000 m**
EMC	**EN 61131-2**
Vibration	
In accordance with the standard	**EN 60068-2-6**
Frequency	**10 - 150 Hz**
Acceleration	**1g**
Shock stress	
In accordance with the standard	**EN 60068-2-27**
Acceleration	**15g**
Duration	**11 ms**
Airgap creepage	
In accordance with the standard	**EN 61131-2**
Overvoltage category	**II**
Pollution degree	**2**
Protection type	
In accordance with the standard	**EN 60529**
Housing	**IP20**
Terminals	**IP20**
Mounting area (e.g. control cabinet)	**IP54**
Potential isolation	
Potential isolation between	**Fieldbus and module voltage**
Type of potential isolation	**Functional insulation**
Rated insulation voltage	**30 V**
Rated surge voltage	**500 V**
Mechanical data	
Mounting position	**horizontally on mounting rail**
DIN rail	
Top hat rail	**35 x 7,5 EN 50022**
Recess width	**27 mm**
Material	
Bottom	**PC**
Front	**PC**
Top	**PC**
Connection type	**Spring-loaded terminal, screw terminal**
Conductor cross section with screw terminals	
1 core flexible	**0,25 - 2,5 mm², 24 - 12 AWG**
2 core with the same cross section, flexible without crimp connectors or with TWIN crimp connectors	**0,2 - 1,5 mm², 24 - 16 AWG**

Fieldbus modules
PNOZ m ES Profibus

Mechanical data	
Torque setting with screw terminals	**0,5 Nm**
Conductor cross section with spring-loaded terminals: Flexible with/without crimp connector	**0,2 - 2,5 mm², 24 - 12 AWG**
Spring-loaded terminals: Terminal points per connection	**2**
Stripping length with spring-loaded terminals	**9 mm**
Dimensions	
Height	**101,4 mm**
Width	**22,5 mm**
Depth	**115 mm**
Weight	**95 g**

Where standards are undated, the 2012-10 latest editions shall apply.

Order reference

Product

Product type	Features	Order no.
PNOZ m ES Profibus	Fieldbus module, PROFIBUS for PNOZ m Bx	772 132

Accessories

Terminator, jumper

Product type	Features	Order no.
PNOZ mm0.xp connector left	Jumper yellow/black to connect the modules, 10 pieces	779 260

Connection terminals

Product type	Features	Order no.
Spring terminals PNOZ mmcxp 1 pc.	Spring-loaded terminals, 1 piece	783 542
Spring terminals PNOZ mmcxp 10 pcs.	Spring-loaded terminals, 10 pieces	783 543
Screw terminals PNOZ mmcxp 1 pc.	Screw terminals, 1 piece	793 542
Screw terminals PNOZ mmcxp 10 pcs.	Screw terminals, 10 pieces	793 543

Fieldbus modules
PNOZ m ES CANopen



Overview

Unit features

Application of the product PNOZ m ES CANopen:

Expansion module for connection to a base unit from the PNOZmulti 2 system.

The product has the following features:

- Can be configured in the PNOZmulti Configurator
- Connection for CANopen
- Station addresses from 0 ... 99, selected via rotary switch
- Transmission rate selected via rotary switch (1 MBit/s, 10 kbit/s, 125 kBit/s, 20 kbit/s, 250 kBit/s, 50 kbit/s, 500 kBit/s, 800 kbit/s)
- Status indicators for communication with CANopen and for errors
- 128 virtual inputs and outputs on the control system PNOZmulti 2 can be defined in the PNOZmulti Configurator for communication with the fieldbus CANopen.
- Max. 1 PNOZ m ES CANopen can be connected to the base unit
- Plug-in connection terminals:
  Either spring-loaded terminal or screw terminal available as an accessory (see Order references for accessories [📖 772]).
- Please refer to the document "PNOZmulti System Expansion" for details of the base units PNOZmulti 2 that can be connected.

Fieldbus modules
PNOZ m ES CANopen

Front view

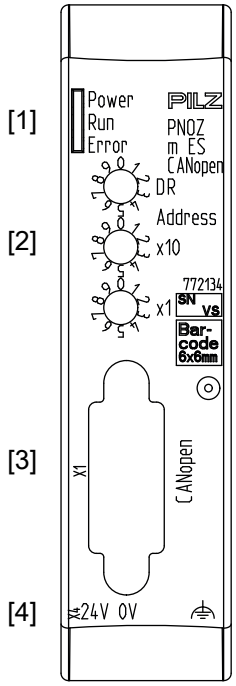

Legend

[1] LED
- Power
- Run
- Error

[2] Rotary switch
- DR = Transmission rate
- X10 = Tens digit for the station address
- X1 = Units digit for the station address

[3] X1: CANopen interface (male 9-pin D-Sub connector)

[4] X4: 0 V, 24 V:
Supply connections

⏚ Functional earth

Fieldbus modules
PNOZ m ES CANopen

Function description

Operation

The virtual inputs and outputs that are to be transferred via CANopen are selected and configured in the PNOZmulti Configurator. The base unit and the expansion module PNOZ m ES CANopen are connected via a jumper. The station address and the transmission rate are set using rotary switches. After the supply voltage is switched on or the control system PNOZmulti 2 is reset, the expansion module PNOZ m ES CANopen is configured and started automatically.

LEDs indicate the status of the expansion module on CANopen.

The configuration is described in detail in the PNOZmulti Configurator's online help.

Data access

The data is structured as follows:

- Virtual data
  - Input area PNOZ m ES CANopen

    The values for the inputs are set as an output in the Master and transferred to the PNOZmulti 2.
  - Output range PNOZ m ES CANopen

    The outputs are configured in the PNOZmulti Configurator and transferred to the Master.
- Status of LEDs:

  LED status 1 Output Byte
  The LED status of the base unit can be requested directly as follows
  - Bit 0 = 1: LED OFAULT is lit or flashes
  - Bit 1 = 1: LED IFAULT is lit or flashes
  - Bit 2 = 1: LED FAULT is lit or flashes
  - Bit 3 = 1: LED DIAG is lit or flashes
  - Bit 4 = 1: LED RUN FS is lit
  - Bit 5: Reserved
  - Bit 6 = 1: LED RUN ST is lit (not for PNOZ m B0)
  - Bit 7: Reserved
- Data exchange is displayed in Bit 5.
- Polling the payload data: 2 Bytes with the table number and segment number are sent by the Master for access to the payload data table (15 Bytes are returned to the Master).

The document "Communication Interfaces" contains detailed information

Fieldbus modules
PNOZ m ES CANopen

- on data exchange (tables, segments) in the section entitled "Fieldbus modules",
- on the virtual data in chapter "Service Data Objects (SDOs)" for PNOZ m ES CANopen.

Block diagram

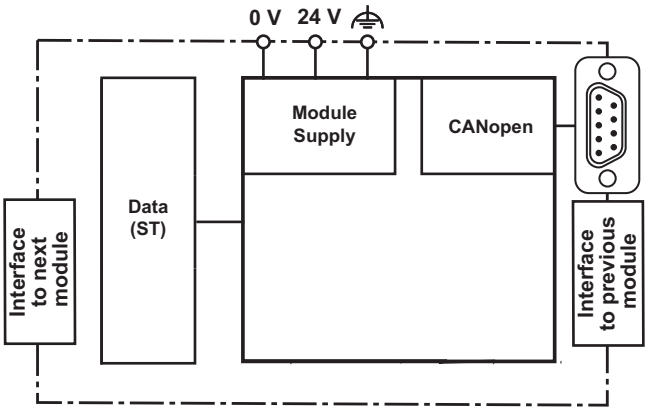

Installation

Dimensions in mm

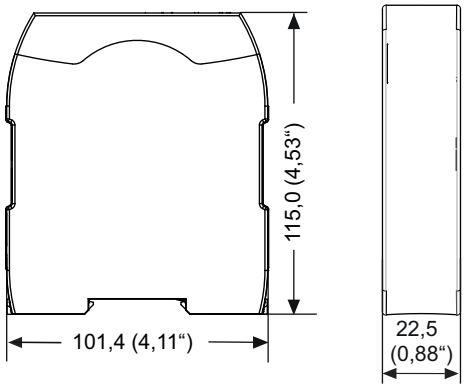

Fieldbus modules
PNOZ m ES CANopen

Commissioning

Wiring

General wiring guidelines

The wiring is defined in the circuit diagram of the PNOZmulti Configurator.

Please note:

- Information given in the Technical details [📖 1004] must be followed.
- The position of the expansion module is specified in the Hardware configuration of the PNOZmulti Configurator.
- Use copper wiring with a temperature stability of 75 °C.
- External measures must be used to connect the terminal ⏚ to the functional earth, when the mounting rail is **not** connected to the functional earth.
- Always connect the mounting rail to the protective earth via an earthing terminal. This will be used to dissipate hazardous voltages in the case of a fault.
- The power supply must meet the regulations for extra low voltages with protective electrical separation (SELV, PELV).

Connecting the supply voltage

Connect the supply voltage to the fieldbus module:

- **24 V** terminal: + 24 VDC
- **0 V** terminal: 0 V
- Protect the supply voltage as follows:
  - Circuit breaker, characteristic C - 6 A

    or
  - Blow-out fuse, slow, 6A

CANopen interface

The connection to CANopen is made via a male 9-pin D-Sub connector.

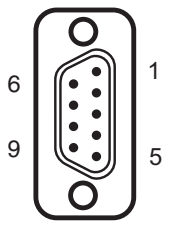

1: n.c.
2: CAN_L
3: CAN_GND
4: n.c.
5: CAN_SHLD
6: n.c.
7: CAN_H
8: n.c.
9: n.c.

n.c. = not connected

Fieldbus modules
PNOZ m ES CANopen

Please note the following when connecting to CANopen:

- Only use metal plugs or metallised plastic plugs
- Twisted pair, screened cable must be used to connect the interfaces

Termination CANopen

To minimise cable reflection and to guarantee a defined rest signal on the transmission line, CANopenmust be terminated at both ends.

Setting the transmission rate

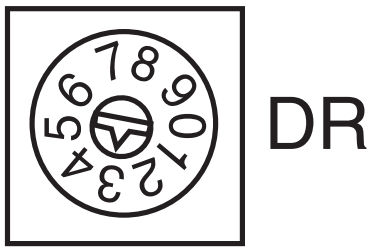

- On the upper rotary switch DR, use a small screwdriver to set the transmission rate (in the example, "3" corresponds to 50 kBit/s).

Switch setting	0	1	2	3	4	5	6	7	8	9
Transmission rate	-	10 kBit/s	20 kBit/s	50 kBit/s	125 kBit/s	250 kBit/s	500 kBit/s	800 kBit/s	1 MBit/s	-

Setting the station address

The station address of the expansion module PNOZ m ES CANopen is set between 0 ... 99 (decimal) via two rotary switches x1 and x10.

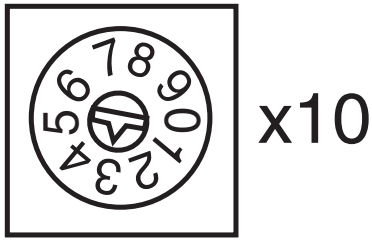

- On the middle rotary switch x10, use a small screwdriver to set the tens digit for the address (“3” in the example).

Fieldbus modules
PNOZ m ES CANopen

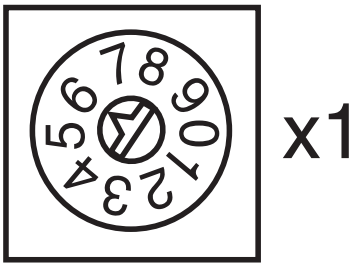

- On the lower rotary switch x1, set the ones digit for the address (“6” in the example).

Station address 36 is set in the diagrams as an example.

Connection example

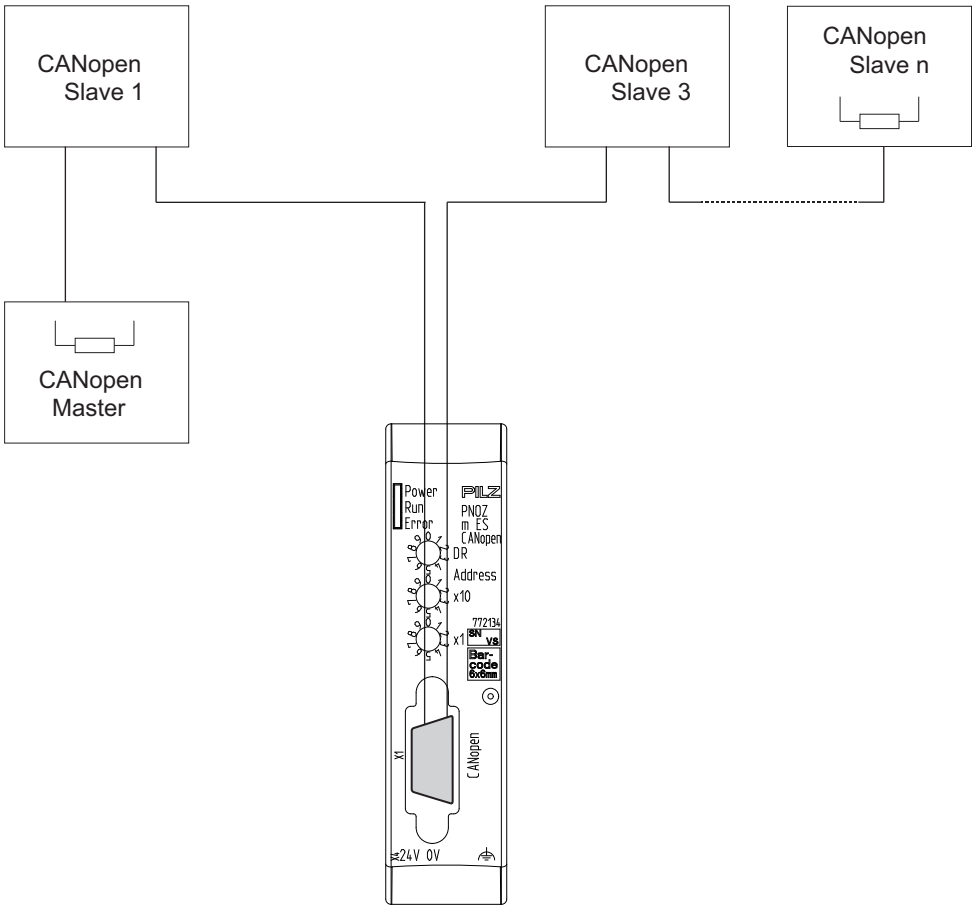

Fieldbus modules
PNOZ m ES CANopen

Download modified project to the PNOZmulti safety system

As soon as an additional expansion module has been connected to the system, the project must be amended in the PNOZmulti Configurator and downloaded back into the base unit. Proceed as described in the operating manual for the base unit.

Fieldbus modules
PNOZ m ES CANopen

Technical details

General	
Certifications	**CE, EAC (Eurasian), cULus Listed**
Electrical data	
Supply voltage	
for	**Module supply**
Voltage	**24 V**
Kind	**DC**
Voltage tolerance	**-20 %/+25 %**
Max. continuous current that the external power supply must provide	**35 mA**
Output of external power supply (DC)	**0,9 W**
Potential isolation	**yes**
Supply voltage	
for	**Module supply**
internal	**Via base unit**
Voltage	**3,3 V**
Kind	**DC**
Current consumption	**60 mA**
Power consumption	**0,2 W**
Max. power dissipation of module	**1,5 W**
Status indicator	**LED**
Fieldbus interface	
Fieldbus interface	**CANopen**
Device type	**Slave**
Log	**CiA 301 V4.2.0**
Station address	**0 - 99d**
Transmission rates	**1 MBit/s, 10 kbit/s, 125 kBit/s, 20 kbit/s, 250 kBit/s, 50 kbit/s, 500 kBit/s, 800 kbit/s**
Connection	**9-pin D-Sub male connector**
Galvanic isolation	**yes**
Test voltage	**500 V AC**
Environmental data	
Ambient temperature	
In accordance with the standard	**EN 60068-2-14**
Temperature range	**0 - 60 °C**
Forced convection in control cabinet off	**55 °C**
Storage temperature	
In accordance with the standard	**EN 60068-2-1/-2**
Temperature range	**-25 - 70 °C**

Fieldbus modules
PNOZ m ES CANopen

Environmental data	
Climatic suitability	
In accordance with the standard	**EN 60068-2-30, EN 60068-2-78**
Condensation during operation	**Not permitted**
Max. operating height above sea level	**2000 m**
EMC	**EN 61131-2**
Vibration	
In accordance with the standard	**EN 60068-2-6**
Frequency	**10 - 150 Hz**
Acceleration	**1g**
Shock stress	
In accordance with the standard	**EN 60068-2-27**
Acceleration	**15g**
Duration	**11 ms**
Airgap creepage	
In accordance with the standard	**EN 61131-2**
Overvoltage category	**II**
Pollution degree	**2**
Rated insulation voltage	**30 V**
Protection type	
In accordance with the standard	**EN 60529**
Housing	**IP20**
Terminals	**IP20**
Mounting area (e.g. control cabinet)	**IP54**
Mechanical data	
Mounting position	**horizontally on mounting rail**
DIN rail	
Top hat rail	**35 x 7,5 EN 50022**
Recess width	**27 mm**
Material	
Bottom	**PC**
Front	**PC**
Top	**PC**
Connection type	**Spring-loaded terminal, screw terminal**
Conductor cross section with screw terminals	
1 core flexible	**0,25 - 2,5 mm², 24 - 12 AWG**
2 core with the same cross section, flexible without crimp connectors or with TWIN crimp connectors	**0,2 - 1,5 mm², 24 - 16 AWG**
Torque setting with screw terminals	**0,5 Nm**
Conductor cross section with spring-loaded terminals: Flexible with/without crimp connector	**0,2 - 2,5 mm², 24 - 12 AWG**

Fieldbus modules
PNOZ m ES CANopen

Mechanical data	
Spring-loaded terminals: Terminal points per connection	**2**
Stripping length with spring-loaded terminals	**9 mm**
Dimensions	
Height	**101,4 mm**
Width	**22,5 mm**
Depth	**115 mm**
Weight	**95 g**

Where standards are undated, the 2012-10 latest editions shall apply.

Order reference

Product

Product type	Features	Order no.
PNOZ m ES CANopen	Fieldbus module, CANopen for PNOZ m Bx	772 134

Accessories

Terminator, jumper

Product type	Features	Order no.
PNOZ mm0.xp connector left	Jumper yellow/black to connect the modules, 10 pieces	779 260

Connection terminals

Product type	Features	Order no.
Spring terminals PNOZ mmcxp 1 pc.	Spring-loaded terminals, 1 piece	783 542
Spring terminals PNOZ mmcxp 10 pcs.	Spring-loaded terminals, 10 pieces	783 543
Screw terminals PNOZ mmcxp 1 pc.	Screw terminals, 1 piece	793 542
Screw terminals PNOZ mmcxp 10 pcs.	Screw terminals, 10 pieces	793 543

Fieldbus modules
PNOZ m ES EtherCAT



Overview

Unit features

Application of the product PNOZ m ES EtherCAT:

Expansion module for connection to a base unit from the PNOZmulti 2 system.

The product has the following features:

- Can be configured in the PNOZmulti Configurator
- Network protocols: EtherCAT
- Supports CANopen over EtherCAT (DS301 V4.02 compliant)
- Status indicators for communication with EtherCAT and for errors
- 128 virtual inputs and outputs on the control system PNOZmulti can be defined in the PNOZmulti Configurator for communication with the fieldbus EtherCAT.
- Max. 1 PNOZ m ES EtherCAT can be connected to the base unit
- Plug-in connection terminals:
  Either spring-loaded terminal or screw terminal available as an accessory (see Order references for accessories [📖 772]).
- Please refer to the document "PNOZmulti System Expansion" for details of the base units PNOZmulti 2 that can be connected.

Fieldbus modules
PNOZ m ES EtherCAT

Front view

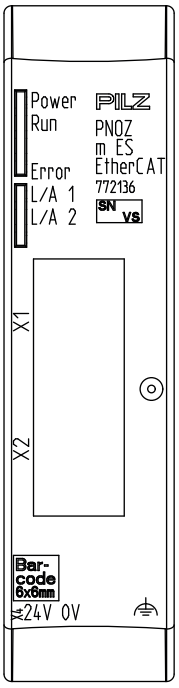

Legend:

- X1: EtherCAT IN
- X2: EtherCAT OUT
- X4: 0 V, 24 V:
  Supply connections

Functional earth

- LEDs:
  - Power
  - Run
  - Error
  - L/A 1
  - L/A 2

EtherCAT® is registered trademark and patented technology, licensed by Beckhoff Automation GmbH, Germany

Fieldbus modules
PNOZ m ES EtherCAT

Function description

Operation

The virtual inputs and outputs that are to be transferred via EtherCAT are selected and configured in the PNOZmulti Configurator. The base unit and the expansion module PNOZ m ES EtherCAT are connected via a jumper. After the supply voltage is switched on or the PNOZmulti control system is reset, the expansion module PNOZ m ES EtherCAT is configured and started automatically.

The connection to EtherCAT is made via the two RJ45 sockets.

LEDs indicate the status of the expansion module on EtherCAT.

The configuration is described in detail in the PNOZmulti Configurator's online help.

Data access

The data is structured as follows:

- Virtual data
  - Input area PNOZ m ES EtherCAT

    The values for the inputs are set in the Master as an output and transferred to the PNOZmulti 2.
  - Output range PNOZ m ES EtherCAT

    The outputs are configured in the PNOZmulti Configurator and transferred to the Master.
- Status of LEDs:

  LED status 1 Output Byte
  The LED status of the base unit can be requested directly as follows
  - Bit 0 = 1: LED OFAULT is lit or flashes
  - Bit 1 = 1: LED IFAULT is lit or flashes
  - Bit 2 = 1: LED FAULT is lit or flashes
  - Bit 3 = 1: LED DIAG is lit or flashes
  - Bit 4 = 1: LED RUN FS is lit
  - Bit 5: Reserved
  - Bit 6 = 1: LED RUN ST is lit (not for PNOZ m B0)
  - Bit 7: Reserved
- Data exchange is displayed in Bit 5.
- Polling the payload data: 2 Bytes with the table number and segment number are sent by the Master for access to the payload data table (15 Bytes are returned to the Master).

The document "Communication Interfaces" contains detailed information

Fieldbus modules
PNOZ m ES EtherCAT

- on data exchange (tables, segments) in the section entitled "Fieldbus modules",
- on the virtual data in chapter "Service Data Objects (SDOs)" for PNOZ m ES EtherCAT.

Block diagram

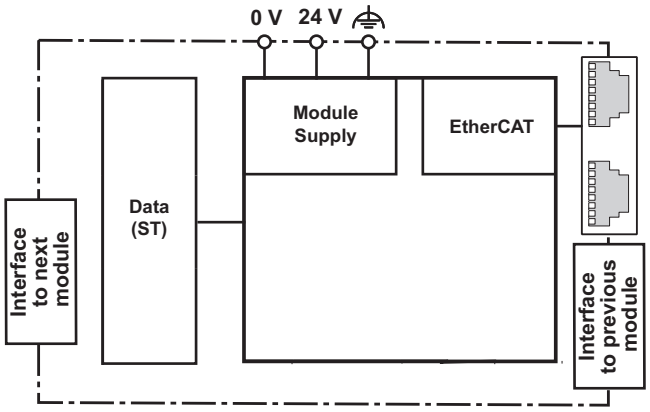

Installation

Dimensions in mm

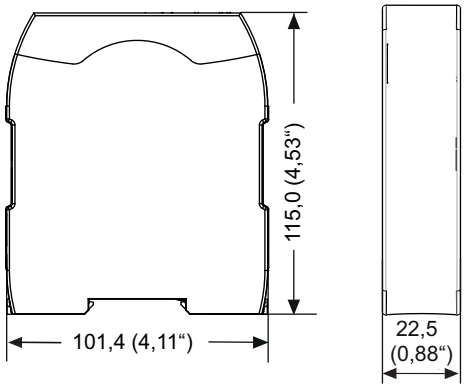

Fieldbus modules
PNOZ m ES EtherCAT

Commissioning

General wiring guidelines

The wiring is defined in the circuit diagram of the PNOZmulti Configurator.

It is possible to define which inputs and outputs on the safety system will communicate with EtherCAT.

Note:

- Information given in the "Technical details" must be followed.
- Use copper wire that can withstand 75 °C.
- External measures must be used to connect the terminal ⏚ to the functional earth, when the mounting rail is **not** connected to the functional earth.

Please note the following when connecting to EtherCAT:

- The following minimum requirements of the connection cable and connector must be met:
  - Only use standard industrial Ethernet cable and connectors.
  - Only use double-shielded twisted pair cable and shielded RJ45 connectors (industrial connectors).
  - 100BaseTX cable in accordance with the Ethernet standard (min. Category 5)
- Measures to protect against interference:

  Ensure the requirements for the industrial use of EtherCAT are met, as stated in the Installation Manual published by the User Group.

Connecting the supply voltage

Connect the supply voltage to the fieldbus module:

- **24 V** terminal: + 24 VDC
- **0 V** terminal: 0 V
- Protect the supply voltage as follows:
  - Circuit breaker, characteristic C - 6 A

    or
  - Blow-out fuse, slow, 6A

Fieldbus modules
PNOZ m ES EtherCAT

Interface assignment

RJ45 socket 8-pin	PIN	Standard
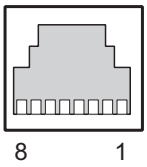	1	TD+ (Transmit+)
	2	TD- (Transmit-)
	3	RD+ (Receive+)
	4	n.c.
	5	n.c.
	6	RD- (Receive-)
	7	n.c.
	8	n.c.

n.c.: Not connected

Download modified project to the PNOZmulti safety system

As soon as an additional expansion module has been connected to the system, the project must be amended in the PNOZmulti Configurator and downloaded back into the base unit. Proceed as described in the operating manual for the base unit.

Preparing for operation

- Install Device Description File

  Install the *Device Description File* in your configuration software. You can only then use the PNOZ m ES EtherCAT.
- Connect the supply voltage to the base unit:

  Terminals **24 V** and **A1 (+)**: + 24 VDC

  Terminals **0 V** and **A2 (-)** : 0 V

Fieldbus modules
PNOZ m ES EtherCAT

Connection example

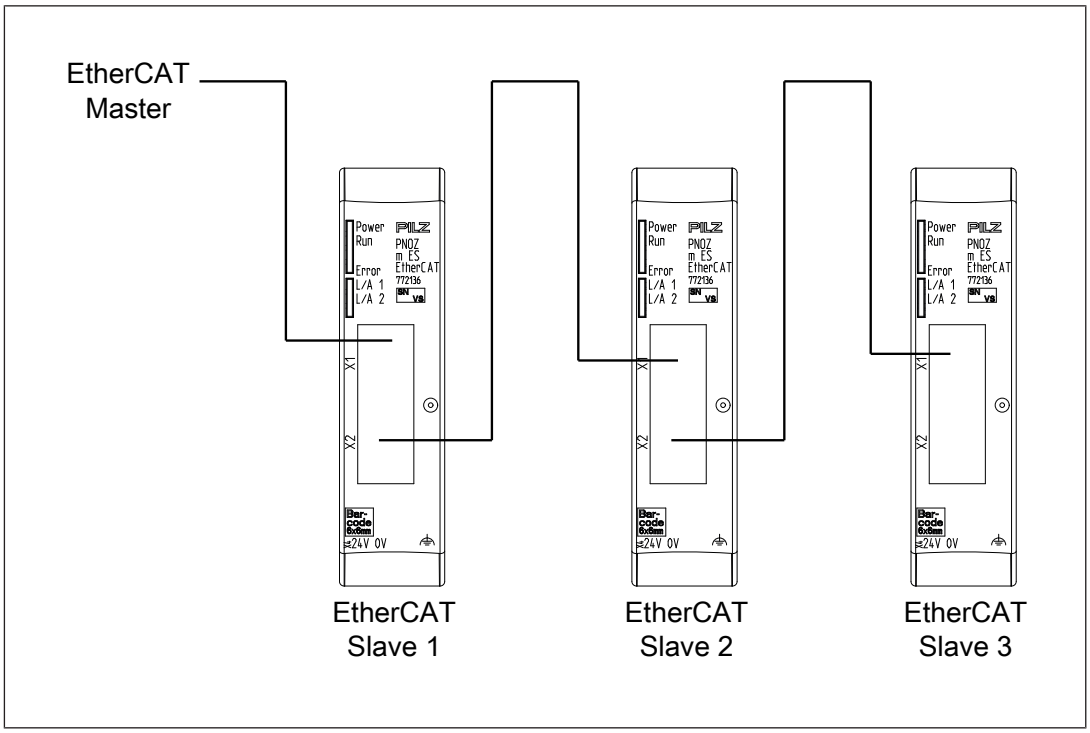

Technical details

General	
Certifications	**CE, EAC (Eurasian), cULus Listed**
Electrical data	
Supply voltage	
for	**Module supply**
Voltage	**24 V**
Kind	**DC**
Voltage tolerance	**-20 %/+25 %**
Max. continuous current that the external power supply must provide	**35 mA**
Output of external power supply (DC)	**0,9 W**
Potential isolation	**yes**
Supply voltage	
for	**Module supply**
internal	**Via base unit**
Voltage	**3,3 V**
Kind	**DC**
Current consumption	**60 mA**
Power consumption	**0,2 W**

Fieldbus modules
PNOZ m ES EtherCAT

Electrical data	
Max. power dissipation of module	**1,5 W**
Status indicator	**LED**
Fieldbus interface	
Fieldbus interface	**EtherCAT**
Device type	**Slave**
Log	**CANopen over EtherCAT**
Transmission rates	**100 MBit/s**
Connection	**RJ45**
Galvanic isolation	**yes**
Environmental data	
Ambient temperature	
In accordance with the standard	**EN 60068-2-14**
Temperature range	**0 - 60 °C**
Forced convection in control cabinet off	**55 °C**
Storage temperature	
In accordance with the standard	**EN 60068-2-1/-2**
Temperature range	**-25 - 70 °C**
Climatic suitability	
In accordance with the standard	**EN 60068-2-30, EN 60068-2-78**
Condensation during operation	**Not permitted**
Max. operating height above sea level	**2000 m**
EMC	**EN 61131-2**
Vibration	
In accordance with the standard	**EN 60068-2-6**
Frequency	**10 - 150 Hz**
Acceleration	**1g**
Shock stress	
In accordance with the standard	**EN 60068-2-27**
Acceleration	**15g**
Duration	**11 ms**
Airgap creepage	
In accordance with the standard	**EN 61131-2**
Overvoltage category	**II**
Pollution degree	**2**
Rated insulation voltage	**30 V**
Protection type	
In accordance with the standard	**EN 60529**
Housing	**IP20**
Terminals	**IP20**
Mounting area (e.g. control cabinet)	**IP54**

Fieldbus modules
PNOZ m ES EtherCAT

Potential isolation	
Potential isolation between	**Fieldbus and module voltage**
Type of potential isolation	**Functional insulation**
Rated surge voltage	**500 V**
Mechanical data	
Mounting position	**horizontally on mounting rail**
DIN rail	
Top hat rail	**35 x 7,5 EN 50022**
Recess width	**27 mm**
Material	
Bottom	**PC**
Front	**PC**
Top	**PC**
Connection type	**Spring-loaded terminal, screw terminal**
Conductor cross section with screw terminals	
1 core flexible	**0,25 - 2,5 mm², 24 - 12 AWG**
2 core with the same cross section, flexible without crimp connectors or with TWIN crimp connectors	**0,2 - 1,5 mm², 24 - 16 AWG**
Torque setting with screw terminals	**0,5 Nm**
Conductor cross section with spring-loaded terminals: Flexible with/without crimp connector	**0,2 - 2,5 mm², 24 - 12 AWG**
Spring-loaded terminals: Terminal points per connection	**2**
Stripping length with spring-loaded terminals	**9 mm**
Dimensions	
Height	**101,4 mm**
Width	**22,5 mm**
Depth	**115 mm**
Weight	**85 g**

Where standards are undated, the 2013-06 latest editions shall apply.

Fieldbus modules
PNOZ m ES EtherCAT

Order reference

Product

Product type	Features	Order no.
PNOZ m ES EtherCAT	Fieldbus module, EtherCAT	772 136

Accessories

Terminator, jumper

Product type	Features	Order no.
PNOZ mm0.xp connector left	Jumper yellow/black to connect the modules, 10 pieces	779 260

Connection terminals

Product type	Features	Order no.
Spring terminals PNOZ mmcxp 1 pc.	Spring-loaded terminals, 1 piece	783 542
Spring terminals PNOZ mmcxp 10 pcs.	Spring-loaded terminals, 10 pieces	783 543
Screw terminals PNOZ mmcxp 1 pc.	Screw terminals, 1 piece	793 542
Screw terminals PNOZ mmcxp 10 pcs.	Screw terminals, 10 pieces	793 543

Fieldbus modules
PNOZ m ES EtherNet/IP



Overview

Unit features

Application of the product PNOZ m ES EtherNet/IP:

Expansion module for connection to a base unit from the PNOZmulti 2 system.

The product has the following features:

- Can be configured in the PNOZmulti Configurator
- Connection for EtherNet/IP as adapter
- Transmission rate 10 MBit/s (10BaseT) and 100 MBit/s (100BaseTX)
- Status indicators for communication and for errors
- 128 virtual inputs and outputs on the control system PNOZmulti can be defined in the PNOZmulti Configurator for communication with the fieldbus EtherNet/IP.
- Max. 1 PNOZ m ES EtherNet/IP can be connected to the base unit
- 2-port switch
- Device Level Ring (DLR)
- Integrated web server
- Please refer to the document "PNOZmulti System Expansion" for details of the base units PNOZmulti 2 that can be connected.

Fieldbus modules
PNOZ m ES EtherNet/IP

Front view

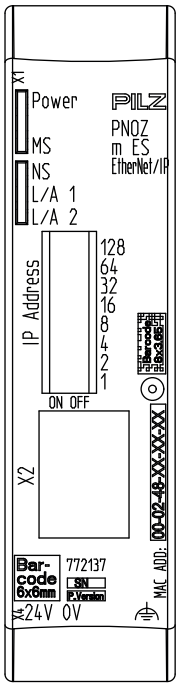

Legend:

- X1, X2: EtherNet/IP - Interfaces
- 0 V, 24 V: Supply connections
- IP address: for setting the IP address
- ⏚: Functional earth
- LED:
  - Power
  - MS
  - NS
  - L/A 1
  - L/A 2

EtherNet/IP™ is registered trademark and patented technology, licensed by ODVA.

Fieldbus modules
PNOZ m ES EtherNet/IP

Function description

Operation

The virtual inputs and outputs that are to be transferred via the fieldbus EtherNet/IP are selected and configured in the PNOZmulti Configurator. The base unit and the fieldbus module PNOZ m ES EtherNet/IP are connected via a jumper. After the supply voltage is switched on or the PNOZmulti control system is reset, the fieldbus module PNOZ m ES EtherNet/IP is configured and started automatically.

LEDs indicate the status of the fieldbus module EtherNet/IP.

The configuration is described in detail in the PNOZmulti Configurator's online help.

Data exchange

17 or 32 bytes must always be sent and received for communication with the PNOZmulti.

Fixed parameters for the input/output assembly instances are set in the fieldbus module PNOZ m ES EtherNet/IP. The following data lengths can be selected:

Assembly Instance Input	Data length	Description
100	32 Bytes	Inputs, tables
101	17 Bytes	Inputs

Assembly Instance Output	Data length	Description
150	32 Bytes	Outputs, LEDs, tables
151	17 Bytes	Outputs, LEDs

Assembly Instance Configuration	Data length	Description
4	0 Bytes	-

Input and output data

The data is structured as follows:

Input area

The inputs are defined in the master and transferred to the PNOZmulti. Each input has a number, e.g. input bit 4 of byte 1 has the number I12.

Virtual inputs PNOZmulti Configurator	I0 … I7	I8 … I15	I16 … I23	...	I120…I127
EtherNet/IP	Byte 0: Bit 0 … 7	Byte 1: Bit 0 … 7	Byte 2: Bit 0 … 7	...	Byte 15: Bit 0 … 7

Fieldbus modules
PNOZ m ES EtherNet/IP

Output range

The outputs are defined in the PNOZmulti Configurator. Each output that is used is given a number there, e.g. O0, O5... .
The status of output O0 is stored in bit 0 of byte 0; the status of output O5 is stored in bit 5 of byte 0 etc.

Virtual inputs PNOZmulti Configurator	O0 … O7	O8 … O15	O16 … O23	...	O120… O127
EtherNet/IP	Byte 0: Bit 0 … 7	Byte 1: Bit 0 … 7	Byte 2: Bit 0 … 7	...	Byte 15: Bit 0 … 7

- Status of LEDs:

  LED status 1 Output Byte
  The LED status of the base unit can be requested directly as follows
  - Bit 0 = 1: LED OFAULT is lit or flashes
  - Bit 1 = 1: LED IFAULT is lit or flashes
  - Bit 2 = 1: LED FAULT is lit or flashes
  - Bit 3 = 1: LED DIAG is lit or flashes
  - Bit 4 = 1: LED RUN FS is lit
  - Bit 5: Reserved
  - Bit 6 = 1: LED RUN ST is lit (not for PNOZ m B0)
  - Bit 7: Reserved
- Data exchange is displayed in Bit 5.
- Polling the payload data: 2 Bytes with the table number and segment number are sent by the Master for access to the payload data table (15 Bytes are returned to the Master).

Detailed information on data exchange is available in the document "Communication Interfaces PNOZmulti 2" in the section entitled "Fieldbus modules".

Fieldbus modules
PNOZ m ES EtherNet/IP

Block diagram

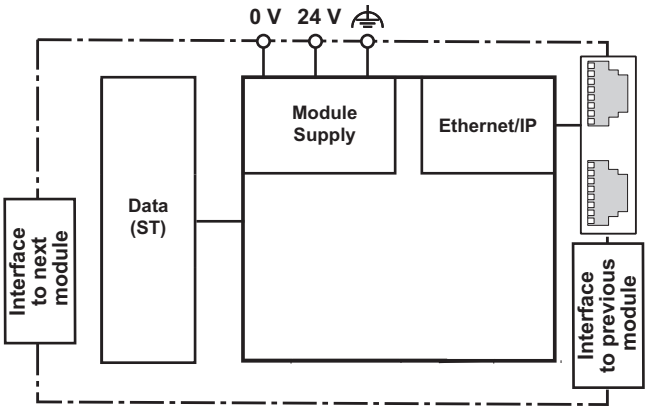

Installation

Dimensions in mm

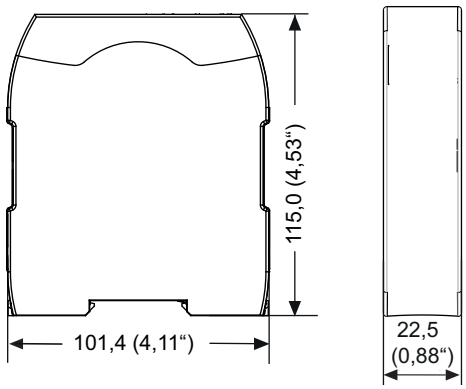

Commissioning

General wiring guidelines

The wiring is defined in the circuit diagram of the PNOZmulti Configurator. It is possible to define which inputs and outputs on the safety system will communicate with EtherNet/IP.

Please note:

- Information given in the "Technical details [📖 1025]" must be followed.
- Use copper wiring with a temperature stability of 75 °C.

Please note the following when connecting to EtherNet/IP:

Fieldbus modules
PNOZ m ES EtherNet/IP

- The following minimum requirements of the connection cable and connector must be met:
  - Only use standard industrial Ethernet cable and connectors.
  - Only use double-shielded twisted pair cable and shielded RJ45 connectors (industrial connectors).
  - 100BaseTX cable in accordance with the Ethernet standard (min. Category 5)
- Measures to protect against interference:

  Ensure the requirements for the industrial use of EtherNet/IP are met, as stated in the Installation Manual published by the User Group.
- External measures must be used to connect the terminal ⏚ to the functional earth, when the mounting rail is **not** connected to the functional earth.
- Always connect the mounting rail to the protective earth via an earthing terminal. This will be used to dissipate hazardous voltages in the case of a fault.
- The power supply must meet the regulations for extra low voltages with protective electrical separation (SELV, PELV).

Connecting the supply voltage

Connect the supply voltage to the fieldbus module:

- **24 V** terminal: + 24 VDC
- **0 V** terminal: 0 V
- Protect the supply voltage as follows:
  - Circuit breaker, characteristic C - 6 A

    or
  - Blow-out fuse, slow, 6A

Interface assignment

RJ45 socket 8-pin	PIN	Standard
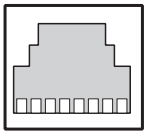	1	TD+ (Transmit+)
	2	TD- (Transmit-)
	3	RD+ (Receive+)
	4	n.c.
	5	n.c.
	6	RD- (Receive-)
	7	n.c.
	8	n.c.

n.c.: Not connected

Set IP address

When setting the IP address, please note:

- Switch off the supply voltage to the fieldbus module PNOZ m ES EtherNet/IP before setting the DIP switches.
- The IP address for the fieldbus module PNOZ m ES EtherNet/IP should not be the same as the PC's IP address.

The following different options are available for setting the IP address.

Set IP address via DIP switches

IP address is set using the DIP switch on the front of the PNOZ m ES EtherNet/IP:

- The first three bytes of the IP address are: 192.168.1.
- Subnet mask: 255.255.255.0.
- The last byte of the IP address is configured using the DIP switch (value range: 1 ...254).
- The IP address that is set at the DIP switch is used. DHCP is therefore disabled.

DIP switch "IP address"	Meaning		Example: IP address 020_D
	OFF	ON	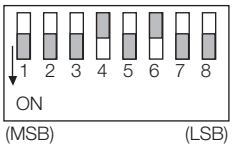
1	0	128_D	
2	0	64_D	
3	0	32_D	
4	0	16_D	
5	0	8_D	
6	0	4_D	
7	0	2_D	
8	0	1_D	

Obtain IP address automatically via DHCP Server

The IP address can be assigned automatically via a DHCP server.
To do this, DHCP must be activated on the fieldbus module PNOZ m ES EtherNet/IP.

- DHCP is already activated when the module is delivered. The IP address is obtained automatically from the DHCP Server when the DIP switch is set to 0. The module waits to receive an address from a DHCP Server.
- If a fixed IP address has previously been set and you wish to activate DHCP via DIP switch, set the DIP switch to 255.
  DHCP will always be used, irrespective of the configuration in the web server.

Fieldbus modules
PNOZ m ES EtherNet/IP

Set IP address via web server or EtherNet/IP scanner

For details of how to set the IP address via the implemented web server, refer to the section entitled Web server.

If a fixed IP address has been assigned via EtherNet/IP Scanner or via the web server, then this will be used.

Please note:

- If you are setting the IP address via the web server, the DIP switch must not be set to 255.
- If you are setting the IP address via the EtherNet/IP Scanner, the DIP switch must be set to 0 and DHCP must be active.

Connection example

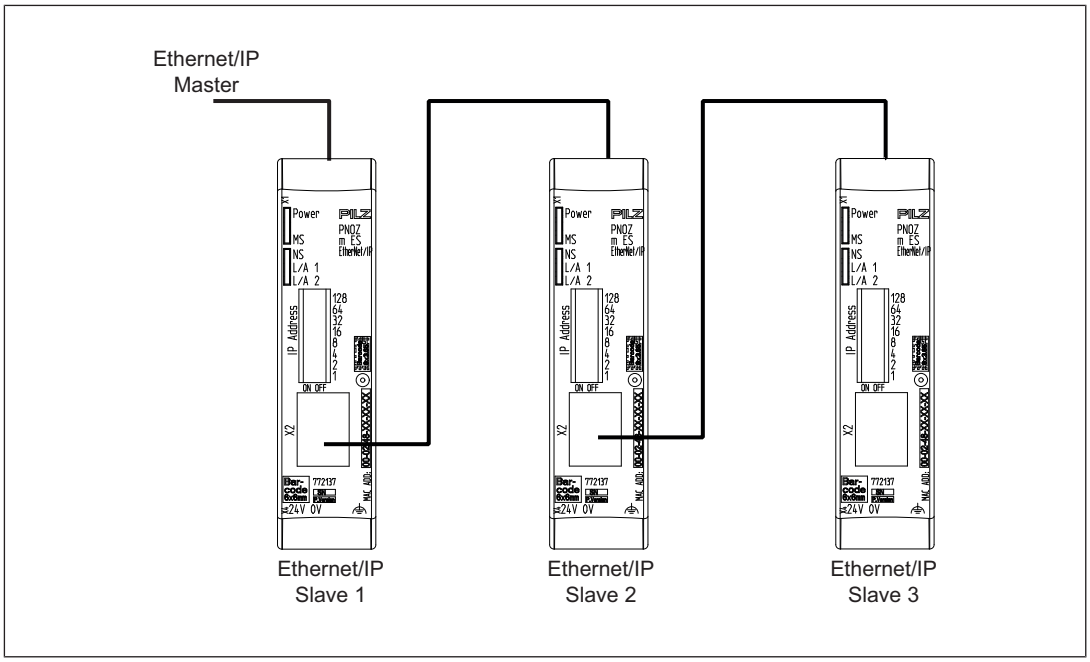

Fieldbus modules
PNOZ m ES EtherNet/IP

Technical Details

General	
Certifications	**CE, EAC (Eurasian), cULus Listed**
Electrical data	
Supply voltage	
for	**Module supply**
Voltage	**24 V**
Kind	**DC**
Voltage tolerance	**-20 %/+25 %**
Max. continuous current that the external power supply must provide	**50 mA**
Output of external power supply (DC)	**1,2 W**
Potential isolation	**yes**
Supply voltage	
for	**Module supply**
internal	**Via base unit**
Voltage	**3,3 V**
Kind	**DC**
Current consumption	**60 mA**
Power consumption	**0,2 W**
Max. power dissipation of module	**1,5 W**
Status indicator	**LED**
Fieldbus interface	
Fieldbus interface	**EtherNet/IP**
Device type	**Adapter**
Transmission rates	**10 MBit/s, 100 MBit/s**
Connection	**2 x RJ45**
Galvanic isolation	**yes**
Environmental data	
Ambient temperature	
In accordance with the standard	**EN 60068-2-14**
Temperature range	**0 - 60 °C**
Forced convection in control cabinet off	**55 °C**
Storage temperature	
In accordance with the standard	**EN 60068-2-1/-2**
Temperature range	**-25 - 70 °C**
Climatic suitability	
In accordance with the standard	**EN 60068-2-30, EN 60068-2-78**
Condensation during operation	**Not permitted**
Max. operating height above sea level	**2000 m**

Fieldbus modules
PNOZ m ES EtherNet/IP

Environmental data	
EMC	**EN 61131-2**
Vibration	
In accordance with the standard	**EN 60068-2-6**
Frequency	**10 - 150 Hz**
Acceleration	**1g**
Shock stress	
In accordance with the standard	**EN 60068-2-27**
Acceleration	**15g**
Duration	**11 ms**
Airgap creepage	
In accordance with the standard	**EN 61131-2**
Overvoltage category	**II**
Pollution degree	**2**
Rated insulation voltage	**30 V**
Protection type	
In accordance with the standard	**EN 60529**
Housing	**IP20**
Terminals	**IP20**
Mounting area (e.g. control cabinet)	**IP54**
Potential isolation	
Potential isolation between	**Fieldbus and module voltage**
Type of potential isolation	**Functional insulation**
Rated surge voltage	**500 V**
Mechanical data	
Mounting position	**horizontally on mounting rail**
DIN rail	
Top hat rail	**35 x 7,5 EN 50022**
Recess width	**27 mm**
Material	
Bottom	**PC**
Front	**PC**
Top	**PC**
Connection type	**Spring-loaded terminal, screw terminal**
Conductor cross section with screw terminals	
1 core flexible	**0,25 - 2,5 mm², 24 - 12 AWG**
2 core with the same cross section, flexible without crimp connectors or with TWIN crimp connectors	**0,2 - 1,5 mm², 24 - 16 AWG**
Torque setting with screw terminals	**0,5 Nm**
Conductor cross section with spring-loaded terminals: Flexible with/without crimp connector	**0,2 - 2,5 mm², 24 - 12 AWG**

Fieldbus modules
PNOZ m ES EtherNet/IP

Mechanical data	
Spring-loaded terminals: Terminal points per connection	**2**
Stripping length with spring-loaded terminals	**9 mm**
Dimensions	
Height	**101,4 mm**
Width	**22,5 mm**
Depth	**110,4 mm**
Weight	**90 g**

Where standards are undated, the 2014-04 latest editions shall apply.

Order reference

Product

Product type	Features	Order no.
PNOZ m ES EtherNet/IP	Fieldbus module, EtherNet/IP	772 137

Accessories

Terminator, jumper

Product type	Features	Order no.
PNOZ mm0.xp connector left	Jumper yellow/black to connect the modules, 10 pieces	779 260

Connection terminals

Product type	Features	Order no.
Spring terminals PNOZ mmcxp 1 pc.	Spring-loaded terminals, 1 piece	783 542
Spring terminals PNOZ mmcxp 10 pcs.	Spring-loaded terminals, 10 pieces	783 543
Screw terminals PNOZ mmcxp 1 pc.	Screw terminals, 1 piece	793 542
Screw terminals PNOZ mmcxp 10 pcs.	Screw terminals, 10 pieces	793 543

Fieldbus modules
PNOZ m ES Powerlink

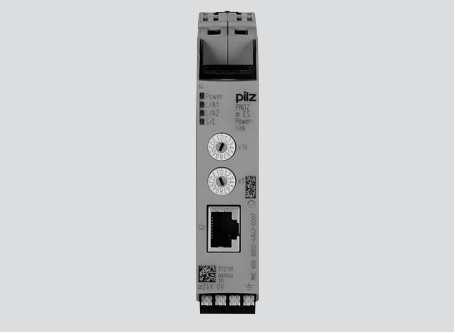

Overview

Unit features

Application of the product PNOZ m ES Powerlink:

Expansion module for connection to a base unit from the PNOZmulti 2 system.

The product has the following features:

- Can be configured in the PNOZmulti Configurator
- Connection for Ethernet POWERLINK (Ethernet POWERLINK V 2 protocol)
- Station addresses from 1 ... 239, selected via rotary switch
- The minimum cycle time for an application of 32 Byte Output and 32 Byte Input is 275µs. The minimum cycle time is 500 µs at the maximum PDO size of 254 Byte Input and 32 Byte Output. (The inputs and outputs in this case are viewed from the Managing Node.)
- 128 virtual inputs and outputs on the control system PNOZmulti can be defined in the PNOZmulti Configurator for communication with the fieldbus Ethernet POWERLINK.
- Max. 1 PNOZ m ES Powerlink can be connected to the base unit
- Please refer to the document "PNOZmulti System Expansion" for details of the base units PNOZmulti 2 that can be connected.
- Plug-in connection terminals:
  Either spring-loaded terminal or screw terminal available as an accessory (see Order references for accessories [📖 772]).

Fieldbus modules
PNOZ m ES Powerlink

Front view

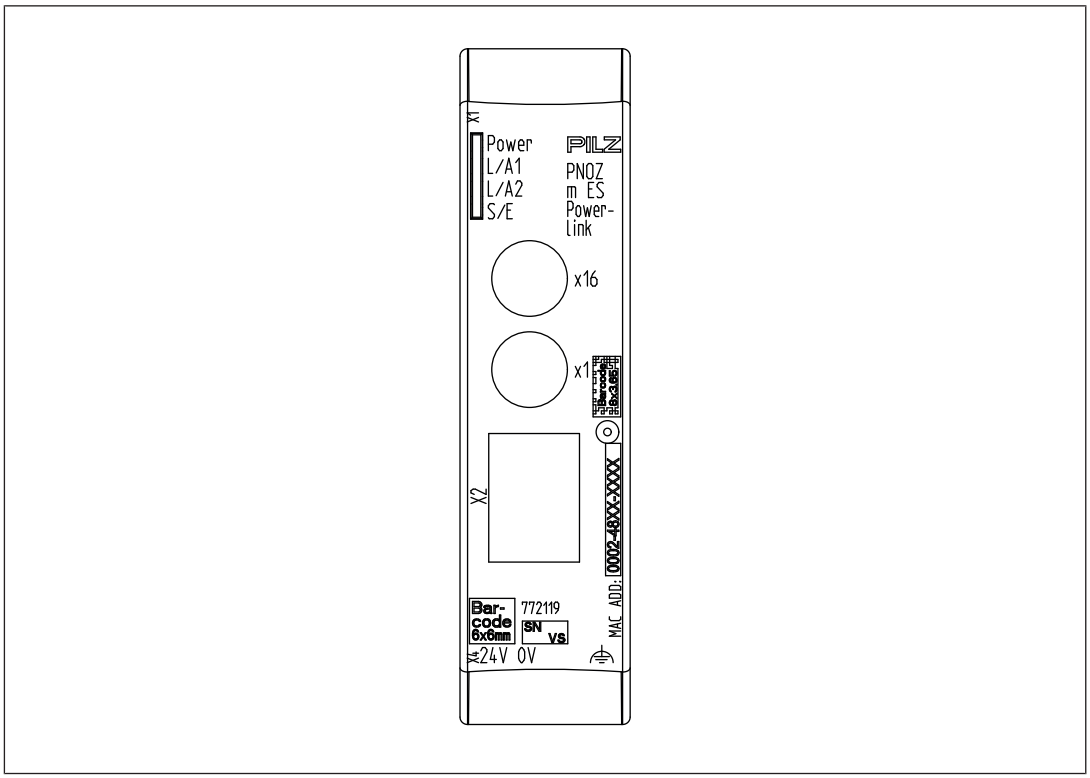

Legend:

- X1, X2: Ethernet POWERLINK interfaces
- 0 V, 24 V: Supply connections
- ⏚: Functional earth
- LED:
  - Power
  - L/A1
  - L/A2
  - S/E (Status/Error)

Function description

Functions

The virtual inputs and outputs that are to be transferred via the fieldbus Ethernet POWERLINK are selected and configured in the PNOZmulti Configurator. The base unit and the fieldbus module PNOZ m ES Powerlink are connected via a jumper. After the supply voltage is switched on or the PNOZmulti control system is reset, the fieldbus module PNOZ m ES Powerlink is configured and started automatically.

Fieldbus modules
PNOZ m ES Powerlink

LEDs indicate the status of the fieldbus module Ethernet POWERLINK.

The configuration is described in detail in the PNOZmulti Configurator's online help.

Input and output data

The data is structured as follows:

- Input area PNOZ m ES Powerlink

  The values for the virtual inputs are set as an output in the Managing Node and transferred to the PNOZmulti 2. Each input has a number, e.g. input bit 4 of SDO 2100:02 has the number i12.

Virtual inputs PNOZmulti Configurator	I0 … I7	I8 … I15	I16 … I23
Ethernet POWERLINK	SDO 2100:01: Bit 0 … 7	SDO 2100:02: Bit 0 … 7	SDO 2100:03: Bit 0 … 7

- Output range PNOZ m ES Powerlink

  The virtual outputs are configured in the PNOZmulti Configurator. Each output that is used is given a number there, e.g. o0, o5... The state of output o0 is stored in Bit 0 of SDO 2000:01.

Virtual outputs PNOZmulti Configurator	O0 … O7	O8 … O15	O16 … O23
Ethernet POWERLINK	SDO 2000:01: Bit 0 … 7	SDO 2000:02: Bit 0 … 7	SDO 2000:03: Bit 0 … 7

- Status of LEDs:

  LED status 1 Output Byte
  The LED status of the base unit can be requested directly as follows

  – Bit 0 = 1: LED OFAULT is lit or flashes
  – Bit 1 = 1: LED IFAULT is lit or flashes
  – Bit 2 = 1: LED FAULT is lit or flashes
  – Bit 3 = 1: LED DIAG is lit or flashes
  – Bit 4 = 1: LED RUN FS is lit
  – Bit 5: Reserved
  – Bit 6 = 1: LED RUN ST is lit (not for PNOZ m B0)
  – Bit 7: Reserved

Detailed information on data exchange is available in the document "Communication Interfaces PNOZmulti 2" in the section entitled "Fieldbus modules".

Fieldbus modules
PNOZ m ES Powerlink

Block diagram

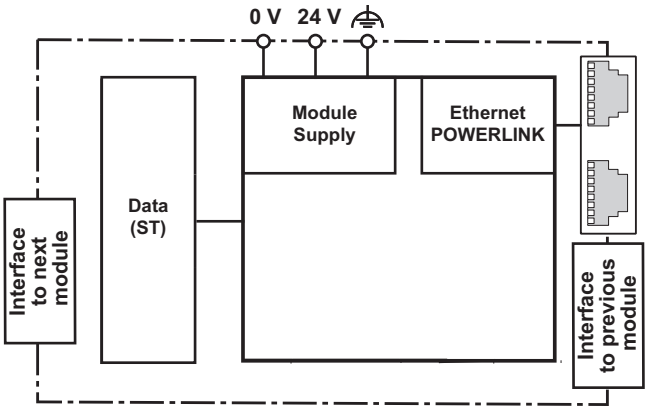

Installation

Dimensions in mm

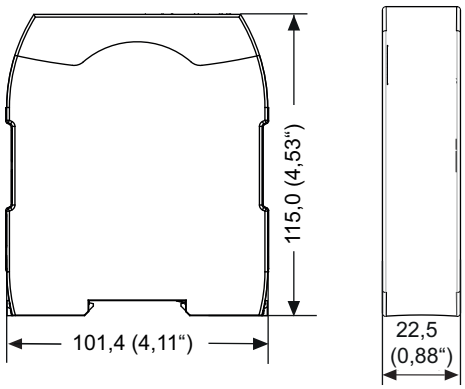

Commissioning

General wiring guidelines

The wiring is defined in the circuit diagram of the PNOZmulti Configurator. It is possible to define which inputs and outputs on the safety system will communicate with Ethernet POWERLINK.

Please note:

- Information given in the "Technical details [📖 1034]" must be followed.
- Use copper wiring with a temperature stability of 75 °C.

Fieldbus modules
PNOZ m ES Powerlink

Please note the following when connecting to Ethernet POWERLINK:

- The following minimum requirements of the connection cable and connector must be met:
  - Only use standard industrial Ethernet cable and connectors.
  - Only use double-shielded twisted pair cable and shielded RJ45 connectors (industrial connectors).
  - 100BaseTX cable in accordance with the Ethernet standard (min. Category 5)
- Measures to protect against interference:

  Ensure the requirements for the industrial use of Ethernet POWERLINK are met, as stated in the Installation Manual published by the User Group.
- External measures must be used to connect the terminal ⏚ to the functional earth, when the mounting rail is **not** connected to the functional earth.
- Always connect the mounting rail to the protective earth via an earthing terminal. This will be used to dissipate hazardous voltages in the case of a fault.
- The power supply must meet the regulations for extra low voltages with protective electrical separation (SELV, PELV).

Connecting the supply voltage

Connect the supply voltage to the fieldbus module:

- **24 V** terminal: + 24 VDC
- **0 V** terminal: 0 V
- Protect the supply voltage as follows:
  - Circuit breaker, characteristic C - 6 A

    or
  - Blow-out fuse, slow, 6A

Fieldbus modules
PNOZ m ES Powerlink

Interface assignment

RJ45 socket 8-pin	PIN	Standard
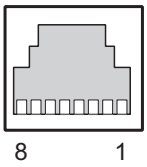	1	TD+ (Transmit+)
	2	TD- (Transmit-)
	3	RD+ (Receive+)
	4	n.c.
	5	n.c.
	6	RD- (Receive-)
	7	n.c.
	8	n.c.

n.c.: Not connected

Connection example

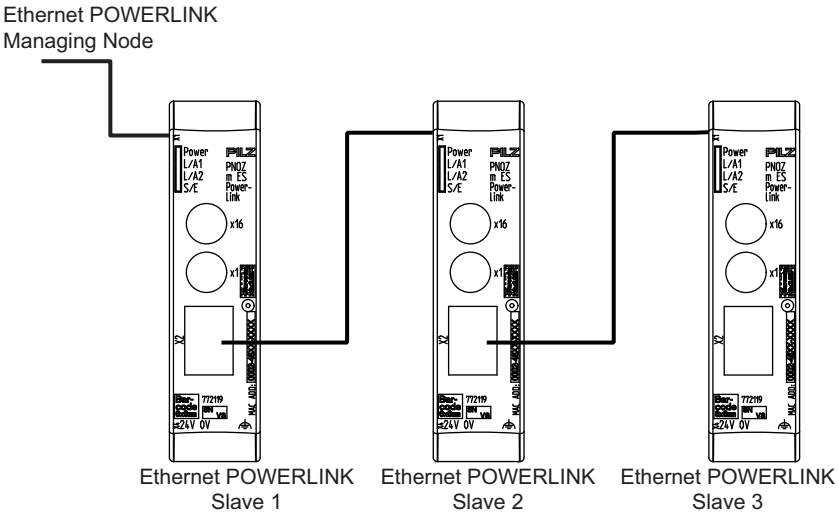

Fieldbus modules
PNOZ m ES Powerlink

Technical Details

General	
Certifications	**CE, EAC (Eurasian), cULus Listed**
Electrical data	
Supply voltage	
for	**Module supply**
Voltage	**24 V**
Kind	**DC**
Voltage tolerance	**-20 %/+25 %**
Max. continuous current that the external power supply must provide	**50 mA**
Output of external power supply (DC)	**1,2 W**
Potential isolation	**yes**
Supply voltage	
for	**Module supply**
internal	**Via base unit**
Voltage	**3,3 V**
Kind	**DC**
Current consumption	**60 mA**
Power consumption	**0,2 W**
Max. power dissipation of module	**1,5 W**
Status indicator	**LED**
Fieldbus interface	
Fieldbus interface	**Ethernet POWERLINK V2**
Device type	**Controlled Node**
Transmission rates	**100 MBit/s**
Connection	**RJ45**
Galvanic isolation	**yes**
Environmental data	
Ambient temperature	
In accordance with the standard	**EN 60068-2-14**
Temperature range	**0 - 60 °C**
Forced convection in control cabinet off	**55 °C**
Storage temperature	
In accordance with the standard	**EN 60068-2-1/-2**
Temperature range	**-25 - 70 °C**
Climatic suitability	
In accordance with the standard	**EN 60068-2-30, EN 60068-2-78**
Condensation during operation	**Not permitted**
Max. operating height above sea level	**2000 m**

Fieldbus modules
PNOZ m ES Powerlink

Environmental data	
EMC	**EN 61131-2**
Vibration	
In accordance with the standard	**EN 60068-2-6**
Frequency	**10 - 150 Hz**
Acceleration	**1g**
Shock stress	
In accordance with the standard	**EN 60068-2-27**
Acceleration	**15g**
Duration	**11 ms**
Airgap creepage	
In accordance with the standard	**EN 61131-2**
Overvoltage category	**II**
Pollution degree	**2**
Rated insulation voltage	**30 V**
Protection type	
In accordance with the standard	**EN 60529**
Housing	**IP20**
Terminals	**IP20**
Mounting area (e.g. control cabinet)	**IP54**
Potential isolation	
Potential isolation between	**Fieldbus and module voltage**
Type of potential isolation	**Functional insulation**
Rated surge voltage	**500 V**
Mechanical data	
Mounting position	**horizontally on mounting rail**
DIN rail	
Top hat rail	**35 x 7,5 EN 50022**
Recess width	**27 mm**
Material	
Bottom	**PC**
Front	**PC**
Top	**PC**
Connection type	**Spring-loaded terminal, screw terminal**
Conductor cross section with screw terminals	
1 core flexible	**0,25 - 2,5 mm², 24 - 12 AWG**
2 core with the same cross section, flexible without crimp connectors or with TWIN crimp connectors	**0,2 - 1,5 mm², 24 - 16 AWG**
Torque setting with screw terminals	**0,5 Nm**
Conductor cross section with spring-loaded terminals: Flexible with/without crimp connector	**0,2 - 2,5 mm², 24 - 12 AWG**

Fieldbus modules
PNOZ m ES Powerlink

Mechanical data	
Spring-loaded terminals: Terminal points per connection	**2**
Stripping length with spring-loaded terminals	**9 mm**
Dimensions	
Height	**101,4 mm**
Width	**22,5 mm**
Depth	**110,4 mm**
Weight	**90 g**

Where standards are undated, the 2013-10 latest editions shall apply.

Order reference

Product

Product type	Features	Order no.
PNOZ m ES Powerlink	Fieldbus module, Ethernet POWERLINK	772 119

Accessories

Terminator, jumper

Product type	Features	Order no.
PNOZ mm0.xp connector left	Jumper yellow/black to connect the modules, 10 pieces	779 260

Connection terminals

Product type	Features	Order no.
Spring terminals PNOZ mmcxp 1 pc.	Spring-loaded terminals, 1 piece	783 542
Spring terminals PNOZ mmcxp 10 pcs.	Spring-loaded terminals, 10 pieces	783 543
Screw terminals PNOZ mmcxp 1 pc.	Screw terminals, 1 piece	793 542
Screw terminals PNOZ mmcxp 10 pcs.	Screw terminals, 10 pieces	793 543

Fieldbus modules
PNOZ m ES Profinet



Overview

Unit features

Application of the product PNOZ m ES Profinet:

Expansion module for connection to a base unit from the PNOZmulti 2 system.

The product has the following features:

- Can be configured in the PNOZmulti Configurator
- Connection for PROFINET
- Status, diagnostic and error displays for communication with PROFINET
- 128 virtual inputs and outputs on the control system PNOZmulti 2 can be defined in the PNOZmulti Configurator for communication with the fieldbus PROFINET.
- Transmission rate 100 MBit/s (100BaseTX), full and half duplex
- Max. 1 PNOZ m ES Profinet can be connected to the base unit
- Two RJ45 ports
- PNOZ m ES Profinet <V2.0: Profinet IO device V2.2 functions in accordance with Conformance Class C
  PNOZ m ES Profinet from V2.0: Profinet IO device V2.3 functions in accordance with Conformance Class C
- Supported functions:
  - RT
  - IRT
  - MRP
  - LLDP
  - I&M 0-4
- Plug-in connection terminals:
  Either spring-loaded terminal or screw terminal available as an accessory (see Order references for accessories [📖 772]).
- Please refer to the document "PNOZmulti System Expansion" for details of the base units PNOZmulti 2 that can be connected.

Fieldbus modules
PNOZ m ES Profinet

Front view

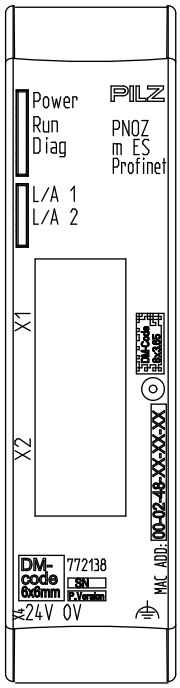

Legend:

- X1, X2: Profinet interfaces
- 0 V, 24 V: Supply connections
- : Functional earth
- LED:
  - Power
  - Run
  - Diag
  - L/A 1
  - L/A 2

Fieldbus modules
PNOZ m ES Profinet

Function description

Operation

The virtual inputs and outputs that are to be transferred via PROFINET are selected and configured in the PNOZmulti Configurator. The base unit and the expansion module PNOZ m ES Profinet are connected via a jumper.

After the supply voltage is switched on or the PNOZmulti 2 is reset, the expansion module PNOZ m ES Profinet is configured and started automatically.

LEDs indicate the status of the fieldbus module PROFINET.

The configuration is described in detail in the PNOZmulti Configurator's online help.

Data access

The data is structured as follows:

- Virtual data
  - Input area PNOZ m ES Profinet

    The values for the inputs are set in the Master as an output and transferred to the PNOZmulti 2.
  - Output area PNOZ m ES Profinet

    The outputs are configured in the PNOZmulti Configurator and transferred to the Master.
- Status of LEDs:

  LED status 1 Output Byte
  The LED status of the base unit can be requested directly as follows
  - Bit 0 = 1: LED OFAULT is lit or flashes
  - Bit 1 = 1: LED IFAULT is lit or flashes
  - Bit 2 = 1: LED FAULT is lit or flashes
  - Bit 3 = 1: LED DIAG is lit or flashes
  - Bit 4 = 1: LED RUN FS is lit
  - Bit 5: Reserved
  - Bit 6 = 1: LED RUN ST is lit (not for PNOZ m B0)
  - Bit 7: Reserved
- Data exchange is displayed in Bit 5.
- Polling the payload data: 2 Bytes with the table number and segment number are sent by the Master for access to the payload data table (15 Bytes are returned to the Master).

Detailed information on data exchange (tables, segments) is available in the document "Communication Interfaces" in the section entitled "Fieldbus modules".

Fieldbus modules
PNOZ m ES Profinet

Assigning the inputs/outputs in the PNOZmulti Configurator to the PROFINET inputs/outputs

Virtual inputs and outputs can be requested or set directly via the following modules. Each element can be selected individually in the master control system, e.g. virtual inputs i0-31. The data width is also established this way.

Input data

The Master writes to the virtual inputs of the PNOZmulti 2.

Description	Input data from PNOZmulti 2
Virtual inputs i0 – i31	4 Input Bytes
Virtual inputs i32 – i63	4 Input Bytes
Virtual inputs i64 – i95	4 Input Bytes
Virtual inputs i96 – i127	4 Input Bytes

Output data

The Master reads the virtual outputs of the PNOZmulti 2.

Description	Output data from PNOZmulti 2
Virtual outputs o0 – o31	4 Output Bytes
Virtual outputs o32 – o63	4 Output Bytes
Virtual outputs o64 – o95	4 Output Bytes
Virtual outputs o96 – o127	4 Output Bytes

Block diagram

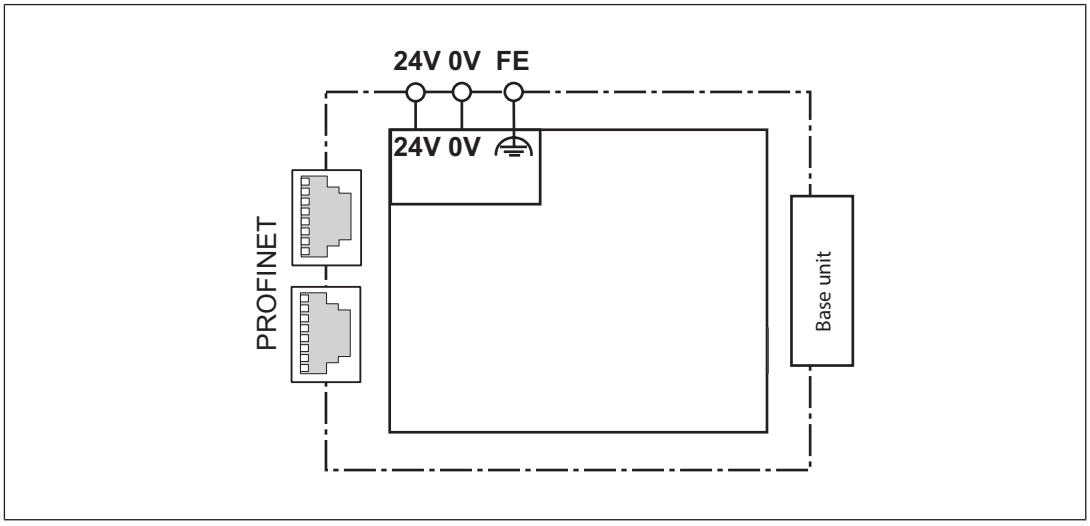

Fieldbus modules
PNOZ m ES Profinet

Installation

Dimensions in mm

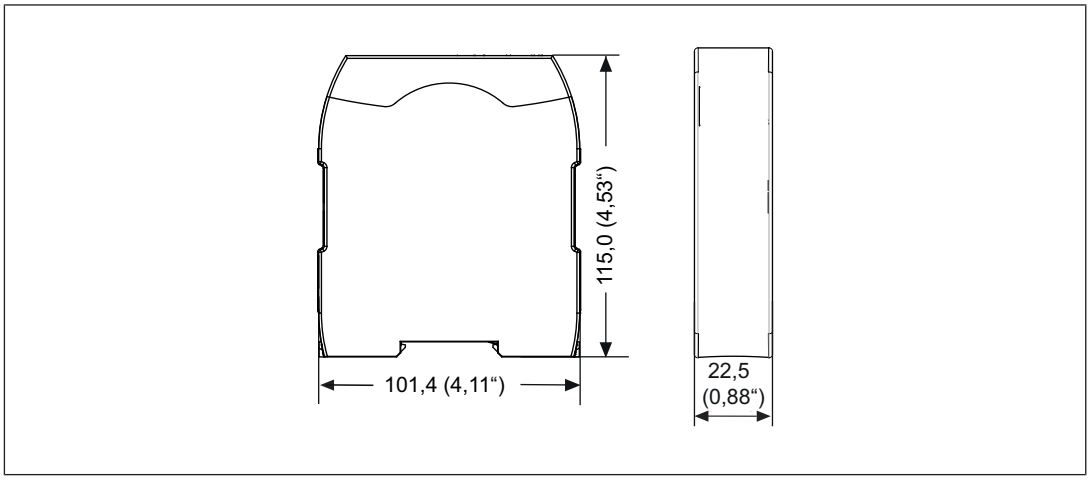

Commissioning

General wiring guidelines

The wiring is defined in the circuit diagram of the PNOZmulti Configurator. It is possible to define which inputs and outputs on the safety system will communicate with PROFINET.

Please note:

- Information given in the "Technical details [📖 1043]" must be followed.
- Use copper wiring with a temperature stability of 75 °C.

Please note the following when connecting to PROFINET:

- The following minimum requirements of the connection cable and connector must be met:
  - Only use standard industrial Ethernet cable and connectors.
  - Only use double-shielded twisted pair cable and shielded RJ45 connectors (industrial connectors).
  - 100BaseTX cable in accordance with the Ethernet standard (min. Category 5)
- Measures to protect against interference:

  Ensure the requirements for the industrial use of PROFINET are met, as stated in the Installation Manual published by the User Group.
- External measures must be used to connect the terminal ⏚ to the functional earth, when the mounting rail is **not** connected to the functional earth.
- Always connect the mounting rail to the protective earth via an earthing terminal. This will be used to dissipate hazardous voltages in the case of a fault.

- The power supply must meet the regulations for extra low voltages with protective electrical separation (SELV, PELV).

Connecting the supply voltage

Connect the supply voltage to the fieldbus module:

- **24 V** terminal: + 24 VDC
- **0 V** terminal: 0 V
- Protect the supply voltage as follows:
  - Circuit breaker, characteristic C - 6 A

    or
  - Blow-out fuse, slow, 6A

Interface assignment

RJ45 socket 8-pin	PIN	Standard
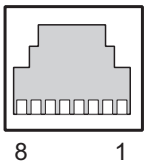	1	TD+ (Transmit+)
	2	TD- (Transmit-)
	3	RD+ (Receive+)
	4	n.c.
	5	n.c.
	6	RD- (Receive-)
	7	n.c.
	8	n.c.

n.c.: Not connected

Preparing for operation

Set IP address

There are two options:

- Automatic assignment of the IP address with the Dynamic Host Configuration Protocol (DHCP)
- Assignment of the IP address by the IO controller before system startup based on the unique unit name.

Install GSDLM file

Install the GDSML file. You can find the GSDML file in the Internet at www.pilz.de.

Fieldbus modules
PNOZ m ES Profinet

Connection example

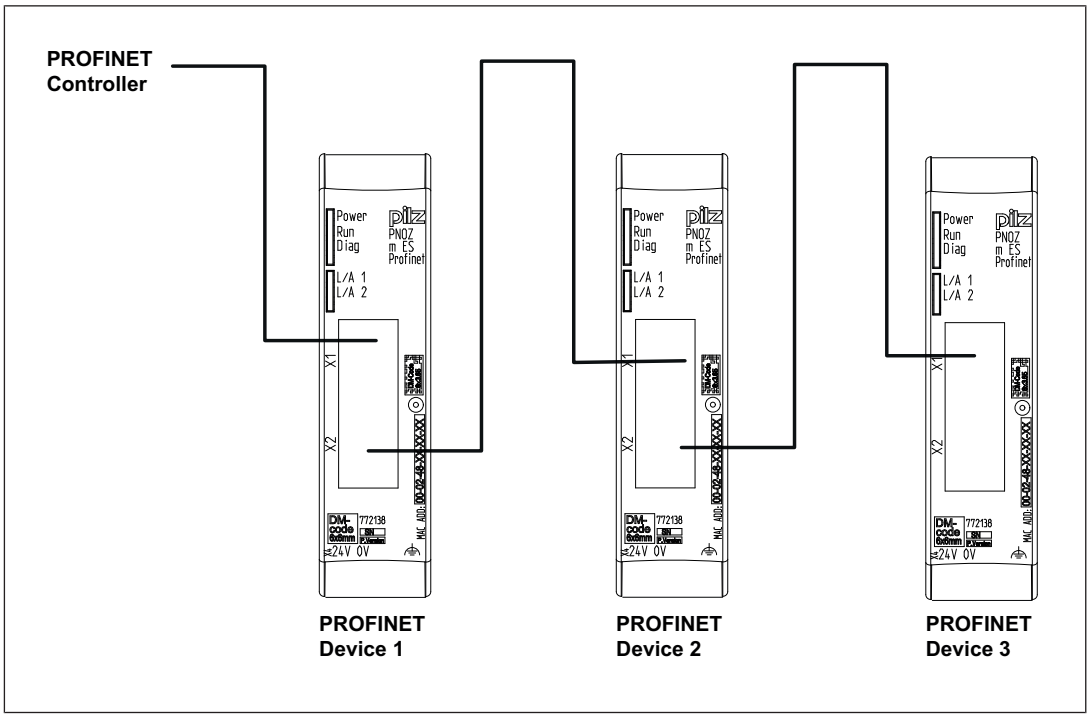

Technical details

General	
Certifications	**CE, EAC (Eurasian), cULus Listed**
Electrical data	
Supply voltage	
for	**Module supply**
Voltage	**24 V**
Kind	**DC**
Voltage tolerance	**-20 %/+25 %**
Max. continuous current that the external power supply must provide	**60 mA**
Output of external power supply (DC)	**1,4 W**
Potential isolation	**yes**
Supply voltage	
for	**Module supply**
internal	**Via base unit**
Voltage	**3,3 V**
Kind	**DC**
Current consumption	**60 mA**
Power consumption	**0,2 W**

Fieldbus modules
PNOZ m ES Profinet

Electrical data	
Max. power dissipation of module	**1,5 W**
Status indicator	**LED**
Fieldbus interface	
Fieldbus interface	**PROFINET**
Device type	**IO-Device**
Transmission rates	**100 MBit/s**
Connection	**2 x RJ45**
Galvanic isolation	**yes**
Environmental data	
Ambient temperature	
In accordance with the standard	**EN 60068-2-14**
Temperature range	**0 - 60 °C**
Forced convection in control cabinet off	**55 °C**
Storage temperature	
In accordance with the standard	**EN 60068-2-1/-2**
Temperature range	**-25 - 70 °C**
Climatic suitability	
In accordance with the standard	**EN 60068-2-30, EN 60068-2-78**
Condensation during operation	**Not permitted**
Max. operating height above sea level	**2000 m**
EMC	**EN 61131-2**
Vibration	
In accordance with the standard	**EN 60068-2-6**
Frequency	**10 - 150 Hz**
Acceleration	**1g**
Shock stress	
In accordance with the standard	**EN 60068-2-27**
Acceleration	**15g**
Duration	**11 ms**
Airgap creepage	
In accordance with the standard	**EN 61131-2**
Overvoltage category	**II**
Pollution degree	**2**
Protection type	
In accordance with the standard	**EN 60529**
Housing	**IP20**
Terminals	**IP20**
Mounting area (e.g. control cabinet)	**IP54**
Potential isolation	
Potential isolation between	**Fieldbus and module voltage**

Fieldbus modules
PNOZ m ES Profinet

Potential isolation	
Type of potential isolation	**Functional insulation**
Rated insulation voltage	**30 V**
Rated surge voltage	**500 V**
Mechanical data	
Mounting position	**horizontally on mounting rail**
DIN rail	
Top hat rail	**35 x 7,5 EN 50022**
Recess width	**27 mm**
Material	
Bottom	**PC**
Front	**PC**
Top	**PC**
Connection type	**Spring-loaded terminal, screw terminal**
Conductor cross section with screw terminals	
1 core flexible	**0,25 - 2,5 mm², 24 - 12 AWG**
2 core with the same cross section, flexible without crimp connectors or with TWIN crimp connectors	**0,2 - 1,5 mm², 24 - 16 AWG**
Torque setting with screw terminals	**0,5 Nm**
Conductor cross section with spring-loaded terminals: Flexible with/without crimp connector	**0,2 - 2,5 mm², 24 - 12 AWG**
Spring-loaded terminals: Terminal points per connection	**2**
Stripping length with spring-loaded terminals	**9 mm**
Dimensions	
Height	**101,4 mm**
Width	**22,5 mm**
Depth	**110,4 mm**
Weight	**86 g**
General	
Certifications	**CE, TÜV**
Application range	**Failsafe**
Module's device code	**00E8h**

Fieldbus modules
PNOZ m ES Profinet

Electrical data	
Supply voltage	
for	**Supply to sensor evaluation, Supply to the SC outputs**
Voltage	**24 V**
Kind	**DC**
Voltage tolerance	**-20 %/+25 %**
Max. continuous current that the external power supply must provide	**1,6 A**
Output of external power supply (DC)	**2,1 W**
Potential isolation	**yes**
Supply voltage	
for	**Module supply**
internal	**Via base unit**
Voltage	**24 V**
Kind	**DC**
Current consumption	**40 mA**
Power consumption	**0,9 W**
Max. power dissipation of module	**5 W**
Status indicator	**LED**
Permitted loads	**inductive, capacitive, resistive**
Proximity switch input	
Number of inputs	**2**
Input signal level	
Signal level at "1"	**11 - 30 V**
Signal level at "0"	**0,0 - 3,0 V**
Input resistance	**22 kOhm**
Input's frequency range	**0 - 5 kHz**
Configurable monitoring frequency	
Without hysteresis	**0,1 Hz - 5 kHz**
Incremental encoder input	
Number of inputs	**1**
Connection type	**Mini-IO female connector, 8-pin**
Input signal level	**0,5 - 30 Vss**
Phase position for the differential signals A, /A and B,/B	**90° ±30°**
Overload protection	**-50 - 65 V**
Input resistance	**20 kOhm**
Input's frequency range	**0 - 500 kHz**
Configurable monitoring frequency	
Without hysteresis	**0,1 Hz - 500 kHz**

Fieldbus modules
PNOZ m ES Profinet

Semiconductor outputs	
Number of positive-switching single-pole semiconductor outputs	**2**
Switching capability	
Voltage	**24 V**
Typ. output current at "1" signal and rated voltage of semiconductor output	**0,5 A**
Permitted current range	**0,000 - 0,600 A**
Residual current at "0" signal	**0,02 mA**
Max. transient pulsed current	**3 A**
Max. capacitive load	**1 µF**
Max. internal voltage drop	**500 mV**
Max. duration of off time during self test	**200 µs**
Switch-off delay	**1 ms**
Potential isolation	**yes**
Short circuit-proof	**yes**
Semiconductor outputs (standard)	
Number	**1**
Switching capability	
Voltage	**24 V**
Current	**0,5 A**
Galvanic isolation	**yes**
Switch-off delay	**1 ms**
Short circuit-proof	**yes**
Cascading output as standard output	
Number	**1**
Switching capability	
Voltage	**24 V**
Galvanic isolation	**yes**
Short circuit-proof	**yes**
Times	
Reaction time after limit value is exceeded	**1/f_ist + 10ms**
Environmental data	
Ambient temperature	
In accordance with the standard	**EN 60068-2-14**
Temperature range	**0 - 60 °C**
Forced convection in control cabinet off	**55 °C**
Storage temperature	
In accordance with the standard	**EN 60068-2-1/-2**
Temperature range	**-25 - 70 °C**

Fieldbus modules
PNOZ m ES Profinet

Environmental data	
Climatic suitability	
In accordance with the standard	**EN 60068-2-30, EN 60068-2-78**
Condensation during operation	**Not permitted**
Max. operating height above sea level	**2000 m**
EMC	**EN 61131-2**
Vibration	
In accordance with the standard	**EN 60068-2-6**
Frequency	**5 - 150 Hz**
Acceleration	**1g**
Shock stress	
In accordance with the standard	**EN 60068-2-27**
Acceleration	**15g**
Duration	**11 ms**
Airgap creepage	
In accordance with the standard	**EN 61131-2**
Overvoltage category	**II**
Pollution degree	**2**
Protection type	
In accordance with the standard	**EN 60529**
Housing	**IP20**
Terminals	**IP20**
Mounting area (e.g. control cabinet)	**IP54**
Potential isolation	
Potential isolation between	**Sensor and system voltage**
Type of potential isolation	**Functional insulation**
Rated insulation voltage	**30 V**
Rated surge voltage	**2500 V**
Potential isolation between	**SC output and system voltage**
Type of potential isolation	**Basic insulation**
Rated insulation voltage	**30 V**
Rated surge voltage	**2500 V**
Mechanical data	
Mounting position	**horizontally on mounting rail**
DIN rail	
Top hat rail	**35 x 7,5 EN 50022**
Recess width	**27 mm**
Material	
Bottom	**PC**
Front	**PC**
Top	**PC**

Fieldbus modules
PNOZ m ES Profinet

Mechanical data	
Connection type	**Spring-loaded terminal, screw terminal**
Mounting type	**plug-in**
Conductor cross section with screw terminals	
1 core flexible	**0,25 - 2,5 mm², 24 - 12 AWG**
2 core with the same cross section, flexible without crimp connectors or with TWIN crimp connectors	**0,2 - 1,5 mm², 24 - 16 AWG**
Torque setting with screw terminals	**0,5 Nm**
Conductor cross section with spring-loaded terminals: Flexible with/without crimp connector	**0,2 - 2,5 mm², 24 - 12 AWG**
Spring-loaded terminals: Terminal points per connection	**2**
Stripping length with spring-loaded terminals	**9 mm**
Dimensions	
Height	**101,4 mm**
Width	**22,5 mm**
Depth	**120 mm**
Weight	**131 g**

Where standards are undated, the 2014-04 latest editions shall apply.

Order reference

Product

Product type	Features	Order no.
PNOZ m ES Profinet	Fieldbus module, PROFINET for PNOZmulti 2	772 138

Accessories

Connection terminals

Product type	Features	Order no.
Spring terminals PNOZ mmcxp 1 pc.	Spring-loaded terminals, 1 piece	783 542
Spring terminals PNOZ mmcxp 10 pcs.	Spring-loaded terminals, 10 pieces	783 543
Screw terminals PNOZ mmcxp 1 pc.	Screw terminals, 1 piece	793 542

Fieldbus modules
PNOZ m ES Profinet

Product type	Features	Order no.
Screw terminals PNOZ mmcxp 10 pcs.	Screw terminals, 10 pieces	793 543

Terminator, jumper

Product type	Features	Order no.
PNOZ mm0.xp connector left	Jumper yellow/black to connect the modules, 10 piece	779 260
RJ45 Connector	8-pin RJ45 male connector, straight, Cat 6a	380 401

Fieldbus modules
PNOZ m ES CC-Link

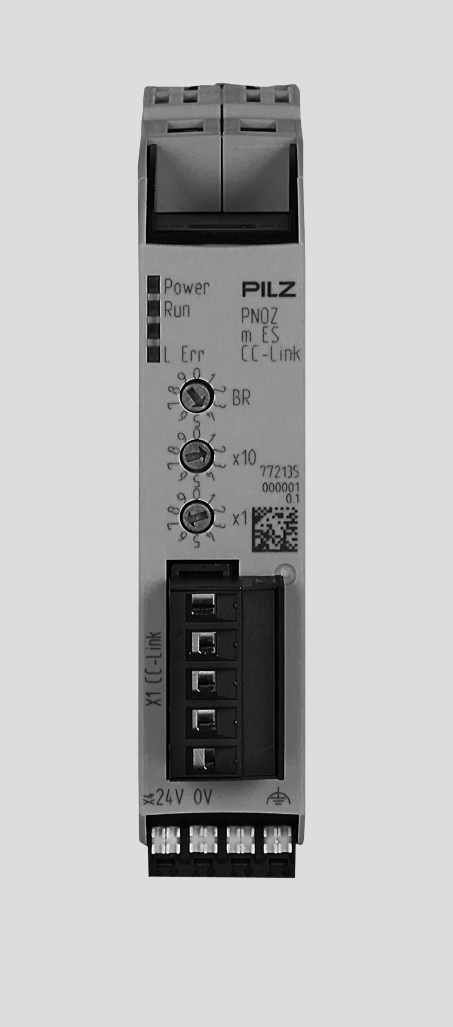

Overview

Unit features

Application of the product PNOZ m ES CC-Link:

Expansion module for connection to a base unit from the PNOZmulti 2 system.

The product has the following features:

- Can be configured in the PNOZmulti Configurator
- Connection for CC-Link
- Station addresses from 1 ... 63, selected via rotary switch
- Station type: Remote Device
- Occupied stations: 3

Fieldbus modules
PNOZ m ES CC-Link

- 128 virtual inputs and outputs on the control system PNOZmulti can be defined in the PNOZmulti Configurator for communication with the fieldbus CC-Link.
- Max. 1 PNOZ m ES CC-Link can be connected to the base unit
- Plug-in connection terminals:
  Either spring-loaded terminal or screw terminal available as an accessory (see Order references for accessories [📖 772]).
- Please refer to the document "PNOZmulti System Expansion" for the PNOZmulti base units that can be connected.

Front view

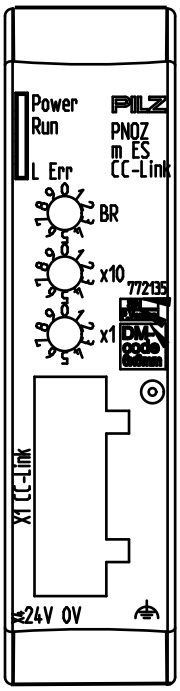

Legend:

X1:	CC-Link interface
X4: 0 V, 24 V:	Supply connections
⏚:	Functional earth
Rotary switch	For setting the station addresses
LEDs:	Power, Run, L Err

Fieldbus modules
PNOZ m ES CC-Link

Function description

Functions

The virtual inputs and outputs that are to be transferred via the fieldbus CC-Link are selected and configured in the PNOZmulti Configurator. The base unit and the fieldbus module PNOZ m ES CC-Link are connected via a jumper. After the supply voltage is switched on or the PNOZmulti control system is reset, the fieldbus module PNOZ m ES CC-Link is configured and started automatically.

LEDs indicate the status of the fieldbus module CC-Link.

The configuration is described in detail in the PNOZmulti Configurator's online help.

To send and receive data three stations have to be created in CC-Link master.

Input and output data

Virtual inputs and outputs can be requested or set directly via the following addresses. The implementation to the names of the inputs and outputs in PNOZmulti 2 is performed as in the table listed below.

The data is structured as follows:

- **Input area**
  - Inputs on PNOZmulti Configurator: i00 .. i127
  - Input data CC-Link: RYmn.. RY(m+50)n, RWw l .. RWw l+2

    with l = address can be set as required on the master side (word address)

    with m = address can be set as required on the master side (Bit address)

    with n = 0 .. F (Bit number)

    Example: (with m=100) i23 -> n = 7 -> RY117

Bit addressed input data i00 - i87

n	F	E	D	C	B	A	9	8	7	6	5	4	3	2	1	0
RY m n	i15	i14	i13	i12	i11	i10	i09	i08	i07	i06	i05	i04	i03	i02	i01	i00
RY(m+10)n	i31	i30	i29	i28	i27	i26	i25	i24	i23	i22	i21	i20	i19	i18	i17	i16
RY(m+20)n	i47	i46	i45	i44	i43	i42	i41	i40	i39	i38	i37	i36	i35	i34	i33	i32
RY(m+30)n	i63	i62	i61	i60	i59	i58	i57	i56	i55	i54	i53	i52	i51	i50	i49	i48
RY(m+40)n	i79	i78	i77	i76	i75	i74	i73	i72	i71	i70	i69	i68	i67	i66	i65	i64
RY(m+50)n									i87	i86	i85	i84	i83	i82	i81	i80

Fieldbus modules
PNOZ m ES CC-Link

Word addressed input data i88 - i127

	High byte								Low byte							
Bit no	**7**	**6**	**5**	**4**	**3**	**2**	**1**	**0**	**7**	**6**	**5**	**4**	**3**	**2**	**1**	**0**
RWw l	i103	i102	i101	i100	i99	i98	i97	i96	i95	i94	i93	i92	i91	i90	i89	i88
RWw l+1	i119	i118	i117	i116	i115	i114	i113	i112	i111	i110	i109	i108	i107	i106	i105	i104
RWw l+2	-	-	-	-	-	-	-	-	i127	i126	i125	i124	i123	i122	i121	i120

- **Output range**
  - Outputs on PNOZmulti Configurator: o00 .. o127
  - Output data CC-Link: RXmn .. RX(m+50)n, RWr l .. RWr l+2

    with l = address can be set as required on the master side (word address)

    with m = address can be set as required on the master side (Bit address)

    with n = 0 .. F (Bit number)

    Example: (with m=100) o22 -> n = 6 -> RX116

Bit addressed output data o00 - o87

n	**F**	**E**	**D**	**C**	**B**	**A**	**9**	**8**	**7**	**6**	**5**	**4**	**3**	**2**	**1**	**0**
RX m n	o15	o14	o13	o12	o11	o10	o09	o08	o07	o06	o05	o04	o03	o02	o01	o00
RX(m+10)n	o31	o30	o29	o28	o27	o26	o25	o24	o23	o22	o21	o20	o19	o18	o17	o16
RX(m+20)n	o47	o46	o45	o44	o43	o42	o41	o40	o39	o38	o37	o36	o35	o34	o33	o32
RX(m+30)n	o63	o62	o61	o60	o59	o58	o57	o56	o55	o54	o53	o52	o51	o50	o49	o48
RX(m+40)n	o79	o78	o77	o76	o75	o74	o73	o72	o71	o70	o69	o68	o67	o66	o65	o64
RX(m+50)n									o87	o86	o85	o84	o83	o82	o81	o80

Word addressed output data o88 - o127

	High byte								Low byte							
Bit No.	**7**	**6**	**5**	**4**	**3**	**2**	**1**	**0**	**7**	**6**	**5**	**4**	**3**	**2**	**1**	**0**
RWr l	o103	o102	o101	o100	o99	o98	o97	o96	o95	o94	o93	o92	o91	o90	o89	o88
RWr l +1	o119	o118	o117	o116	o115	o114	o113	o112	o111	o110	o109	o108	o107	o106	o105	o104
RWr l +2	-	-	-	LED RUN FS	LED DIAG	LED FAULT	LED IFAULT	LED OFAULT	o127	o126	o125	o124	o123	o122	o121	o120

Fieldbus modules
PNOZ m ES CC-Link

LED status

The LED status of PNOZmulti 2 can be read out via the following High Byte.

	High Byte								Low Byte							
Bit no	**7**	**6**	**5**	**4**	**3**	**2**	**1**	**0**	**7**	**6**	**5**	**4**	**3**	**2**	**1**	**0**
RWr (I+2)	LED Byte								Output data o120 - o127							

Bit 5-7: Reserved

The LED status of the base unit PNOZ m B0 can be requested directly as follows

- Bit 0 = 1: LED OFAULT is lit or flashes
- Bit 1 = 1: LED IFAULT is lit or flashes
- Bit 2 = 1: LED FAULT is lit or flashes
- Bit 3 = 1: LED DIAG is lit or flashes
- Bit 4 = 1: LED RUN is lit
- Bit 5-7: Reserved

The LED status of the base unit PNOZ m B1 can be requested directly as follows

- Bit 0 = 1: LED OFAULT is lit or flashes
- Bit 1 = 1: LED IFAULT is lit or flashes
- Bit 2 = 1: LED FAULT is lit or flashes
- Bit 3 = 1: LED DIAG is lit or flashes
- Bit 4 = 1: LED RUN FS is lit
- Bit 5: Reserved
- Bit 6 = 1: LED RUN ST is lit
- Bit 7: Reserved

Access to table segments

The data in the tables can be requested via the following addresses.

Input data

The Master requests a table segment:

	High Byte	Low Byte
RWw (I+3)	Segment number	Table number

Fieldbus modules
PNOZ m ES CC-Link

Output data

PNOZmulti 2 answers as follows:

	High Byte	Low Byte
RWr (I+3)	Segment number	Table number
RWr(I+4)	Segment Byte 1	Segment Byte 0
RWr(I+5)	Segment Byte 3	Segment Byte 2
RWr(I+6)	Segment Byte 5	Segment Byte 4
RWr(I+7)	Segment Byte 7	Segment Byte 6
RWr(I+8)	Segment Byte 9	Segment Byte 8
RWr(I+9)	Segment Byte 11	Segment Byte 10
RWr(I+A)	Reserved	Segment Byte 12
RWr(I+B)	Reserved	Reserved

Block diagram

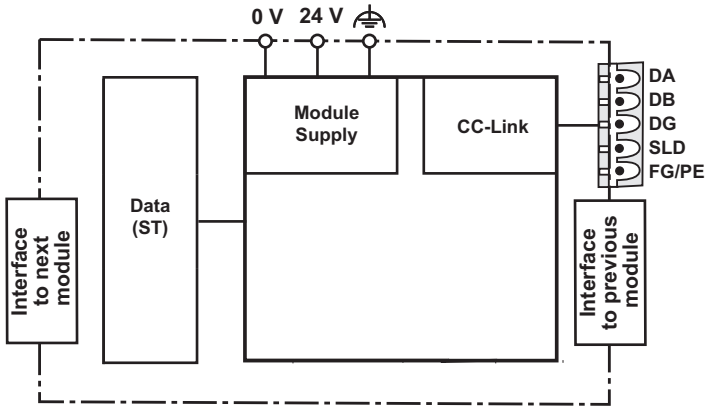

Fieldbus modules
PNOZ m ES CC-Link

Installation

Dimensions in mm

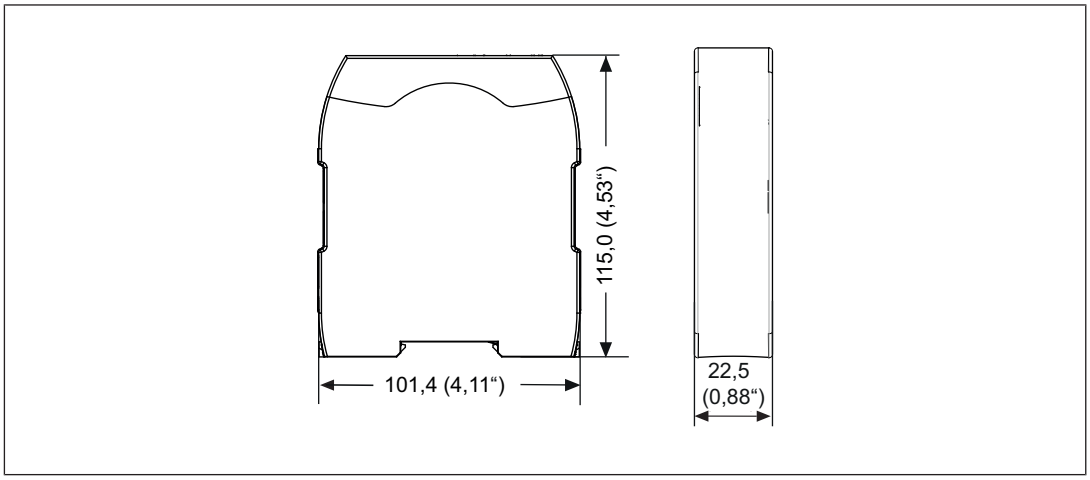

Commissioning

General wiring guidelines

The wiring is defined in the circuit diagram of the PNOZmulti Configurator.

Please note:

- Information given in the Technical details [📖 1060] must be followed.
- The position of the expansion module is specified in the Hardware configuration of the PNOZmulti Configurator.
- Use copper wiring with a temperature stability of 75 °C.
- External measures must be used to connect the terminal ⏚ to the functional earth, when the mounting rail is **not** connected to the functional earth.
- Always connect the mounting rail to the protective earth via an earthing terminal. This will be used to dissipate hazardous voltages in the case of a fault.
- The power supply must meet the regulations for extra low voltages with protective electrical separation (SELV, PELV).

Connecting the supply voltage

Connect the supply voltage to the fieldbus module:

- **24 V** terminal: + 24 VDC
- **0 V** terminal: 0 V

Fieldbus modules
PNOZ m ES CC-Link

- Protect the supply voltage as follows:
  - Circuit breaker, characteristic C - 6 A

    or
  - Blow-out fuse, slow, 6A

Interface assignment

It is possible to define which outputs on the safety system will communicate with CC-Link. The connection to CC-Link is made via a 5-pin screw connector.

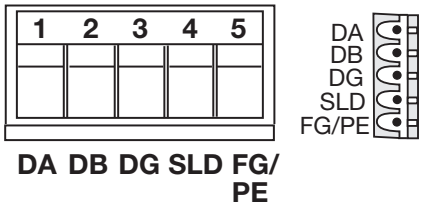

1: DA (Channel A)

2: DB (Channel B)

3: DG (Earth)

4: SLD (Cable shield)

5: FG/PE (Functional earth)

Setting the transmission rate

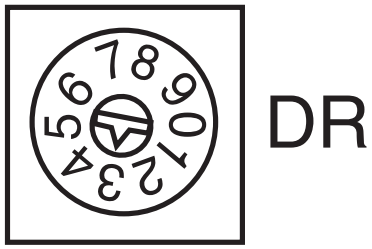

- On the upper rotary switch DR, use a small screwdriver to set the transmission rate (in the example, "3" corresponds to 50 kBit/s).

Switch setting	0	1	2	3	4	5	6	7	8	9
Transmission rate	-	10 kBit/s	20 kBit/s	50 kBit/s	125 kBit/s	250 kBit/s	500 kBit/s	800 kBit/s	1 MBit/s	-

Fieldbus modules
PNOZ m ES CC-Link

Setting the station address

The station address of the expansion module PNOZ m ES CC-Link is set between 0 ... 99 (decimal) via two rotary switches x1 and x10.

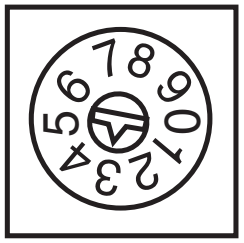

- On the middle rotary switch x10, use a small screwdriver to set the tens digit for the address (“3” in the example).

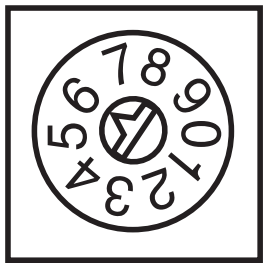

- On the lower rotary switch x1, set the ones digit for the address (“6” in the example).

Station address 36 is set in the diagrams as an example.

Fieldbus modules
PNOZ m ES CC-Link

Connection example

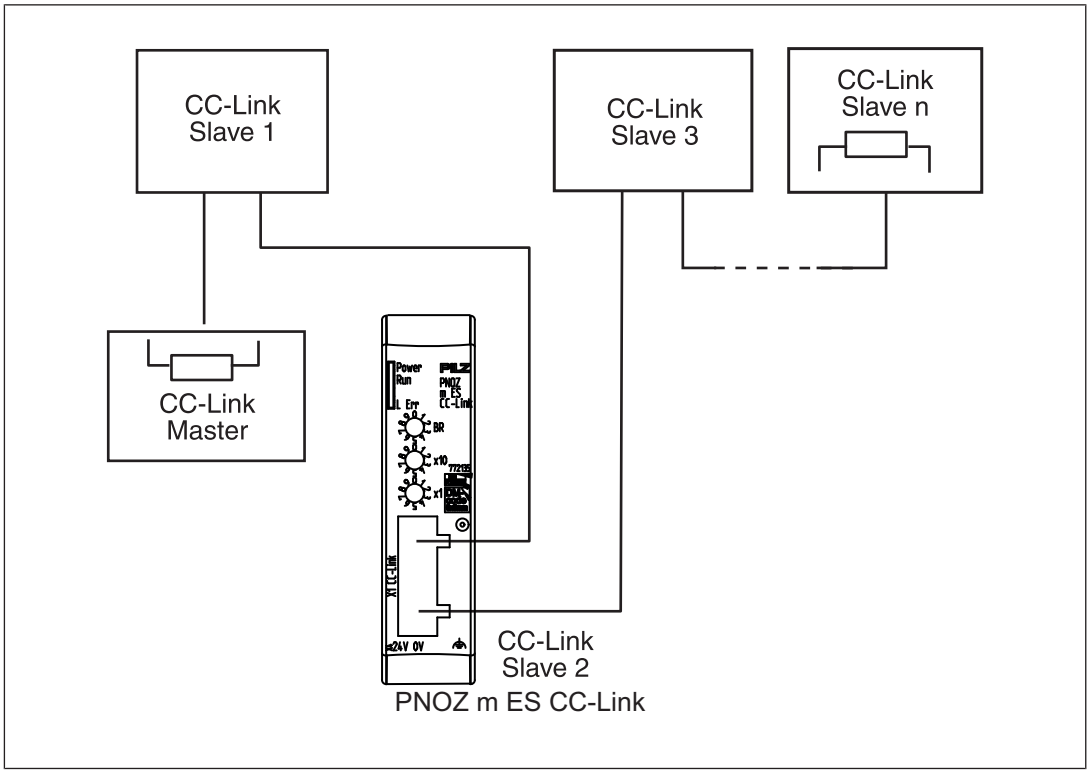

Technical Details

General	
Certifications	**CE, EAC (Eurasian), cULus Listed**
Application range	**Standard**
Electrical data	
Supply voltage	
for	**Module supply**
Voltage	**24 V**
Kind	**DC**
Voltage tolerance	**-20 %/+25 %**
Max. continuous current that the external power supply must provide	**45 mA**
Output of external power supply (DC)	**1,1 W**
Potential isolation	**yes**

Fieldbus modules
PNOZ m ES CC-Link

Electrical data	
Supply voltage	
for	**Module supply**
internal	**Via base unit**
Voltage	**3,3 V**
Kind	**DC**
Current consumption	**60 mA**
Power consumption	**0,2 W**
Max. power dissipation of module	**1,5 W**
Status indicator	**LED**
Fieldbus interface	
Fieldbus interface	**CC-Link V1.10**
Device type	**Slave**
Station address	**1 ... 63d**
Transmission rates	**10 MBit/s, 156 kbit/s, 2,5 MBit/s, 5 MBit/s, 625 kbit/s**
Connection	**5-pin Combicon plug-in connector**
Assigned stations	**3**
Galvanic isolation	**yes**
Environmental data	
Ambient temperature	
In accordance with the standard	**EN 60068-2-14**
Temperature range	**0 - 60 °C**
Forced convection in control cabinet off	**55 °C**
Storage temperature	
In accordance with the standard	**EN 60068-2-1/-2**
Temperature range	**-25 - 70 °C**
Climatic suitability	
In accordance with the standard	**EN 60068-2-30, EN 60068-2-78**
Condensation during operation	**Not permitted**
Max. operating height above sea level	**2000 m**
EMC	**EN 61131-2**
Vibration	
In accordance with the standard	**EN 60068-2-6**
Frequency	**10 - 150 Hz**
Acceleration	**1g**
Shock stress	
In accordance with the standard	**EN 60068-2-27**
Acceleration	**15g**
Duration	**11 ms**

Fieldbus modules
PNOZ m ES CC-Link

Environmental data	
Airgap creepage	
In accordance with the standard	**EN 61131-2**
Overvoltage category	**II**
Pollution degree	**2**
Rated insulation voltage	**30 V**
Protection type	
In accordance with the standard	**EN 60529**
Housing	**IP20**
Terminals	**IP20**
Mounting area (e.g. control cabinet)	**IP54**
Potential isolation	
Potential isolation between	**Fieldbus and module voltage**
Type of potential isolation	**Functional insulation**
Rated surge voltage	**500 V**
Mechanical data	
Mounting position	**horizontally on mounting rail**
DIN rail	
Top hat rail	**35 x 7,5 EN 50022**
Recess width	**27 mm**
Material	
Bottom	**PC**
Front	**PC**
Top	**PC**
Connection type	**Spring-loaded terminal, screw terminal**
Conductor cross section with screw terminals	
1 core flexible	**0,25 - 2,5 mm², 24 - 12 AWG**
2 core with the same cross section, flexible without crimp connectors or with TWIN crimp connectors	**0,2 - 1,5 mm², 24 - 16 AWG**
Torque setting with screw terminals	**0,5 Nm**
Conductor cross section with spring-loaded terminals: Flexible with/without crimp connector	**0,2 - 2,5 mm², 24 - 12 AWG**
Spring-loaded terminals: Terminal points per connection	**2**
Stripping length with spring-loaded terminals	**9 mm**
Dimensions	
Height	**101,4 mm**
Width	**22,5 mm**
Depth	**110,4 mm**
Weight	**90 g**

Where standards are undated, the 2015-08 latest editions shall apply.

Fieldbus modules
PNOZ m ES CC-Link

Order reference

Product

Product type	Features	Order No.
PNOZ m ES CC-Link	Fieldbus module, CC-Link	772135

Accessories

Connection terminals

Product type	Features	Order no.
Spring terminals PNOZ mmcxp 1 pc.	Spring-loaded terminals, 1 piece	783 542
Spring terminals PNOZ mmcxp 10 pcs.	Spring-loaded terminals, 10 pieces	783 543
Screw terminals PNOZ mmcxp 1 pc.	Screw terminals, 1 piece	793 542
Screw terminals PNOZ mmcxp 10 pcs.	Screw terminals, 10 pieces	793 543

Terminator, jumper

Product type	Features	Order no.
PNOZ mm0.xp connector left	Jumper yellow/black to connect the modules, 10 pieces	779 260

Fieldbus modules
PNOZ m EF SafetyNET

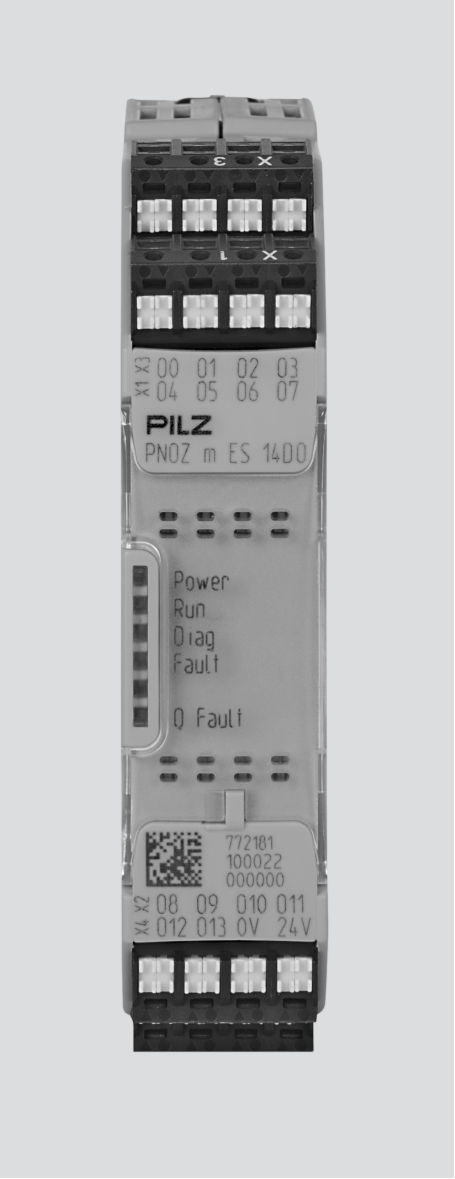

Overview

Unit features

Application of the product PNOZ m EF SafetyNET:

Expansion module for safe data exchange between SafetNET p subscribers via SafetyNET p RTFL.

The product has the following features:

- Can be configured in the PNOZmulti Configurator

Fieldbus modules
PNOZ m EF SafetyNET

- RTFL (Real Time Frame Line) communication for applications with high real-time requirements
- In PNOZmulti Configurator up to 128 virtual inputs and 32 virtual outputs can be defined for safe communication via SafetyNET p.
- Every PNOZmulti 2 SafetyNET p subscriber (base unit PNOZmulti 2) is assigned a module PNOZ m EF SafetyNET.
- Up to 16 SafetyNET p subscribers can be connected in a line structure.
- The module PNOZ m EF SafetyNET is connected as the first safe module to the left of the base unit.
- LED display for communication via SafetyNET p and for displaying errors.
- Plug-in connection terminals:
  Either spring-loaded terminal or screw terminal available as an accessory (see Order references for accessories [📖 772]).
- Please refer to the document "PNOZmulti System Expansion" for details of the base units PNOZmulti 2 that can be connected.

Front view

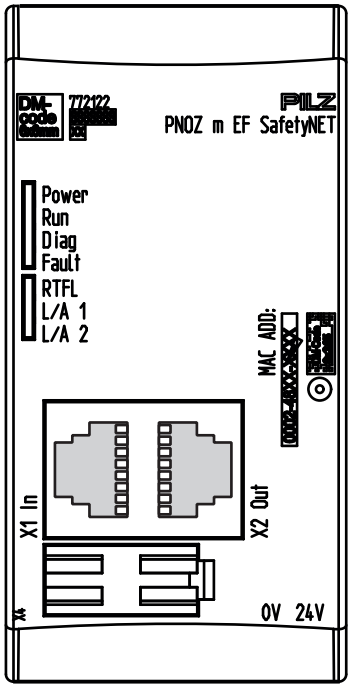

Legend

X1 In:	SafetyNET p input
X2 Out:	SafetyNET p output

0 V, 24 V:	Supply connections
LEDs:	Power, Run, Diag, Fault, RTFL, L/A 1, L/A 2

To determine the version of the device, please note:

The firmware version number is on the labelling clip. This is also the version number that must be selected in the PNOZmulti Configurator under ***Version*** during the hardware configuration.

Function Description

Functions

The expansion module PNOZ m EF SafetyNET is used for safe data exchange between several SafetyNET p subscribers via SafetyNET p RTFL.

The safe virtual inputs and outputs that are defined via SafetyNET p are selected and configured for each PNOZmulti 2 system in PNOZmulti Configurator. Inputs and outputs are assigned to the SafetyNET p subscribers in the software tool PNOZmulti Network Editor.

The LEDs on the base unit and expansion modules indicate the status of the configurable control system PNOZmulti 2.

You can find a description of the configuration in the PNOZmulti Configurator online help and in the PNOZmulti Network Editor online help.

Data exchange:

Communication can start when all the configured SafetyNET p subscribers are available.

Communication is ended when a SafetyNET p subscriber ends its participation (is in stop state).

- Data is exchanged cyclically
- After the end of a PNOZmulti 2 cycle, each PNOZmulti 2 base unit sends its output data to the module PNOZ m EF SafetyNET.
- Within the next cycle, the output data are transferred to all the participating modules PNOZ m EF SafetyNET.
- At the beginning of a cycle of PNOZmulti 2 each base unit requests its input data from the module PNOZ m EF SafetyNET an.

SafetyNET p network:

Every PNOZmulti 2 base unit is assigned an expansion module PNOZ m EF SafetyNET. Up to 16 SafetyNET p subscribers can be connected via SafetyNET p in a line structure.

The SafetyNET p subscribers are interconnected in a linear topology. That is, all the SafetyNET p subscribers are combined without branches. However, the wiring sequence has no influence on communication.

Virtual inputs and outputs:

Fieldbus modules
PNOZ m EF SafetyNET

For each module, 32 safe outputs and 128 safe inputs can be defined. Inputs and outputs to the communicating SafetyNET p subscribers are assigned in the PNOZmulti Network Editor.

System reaction time

Calculation of the maximum reaction time between an input switching off and a linked output in the system switching off is described in the document "PNOZmulti System Expansion [30]".

Block diagram

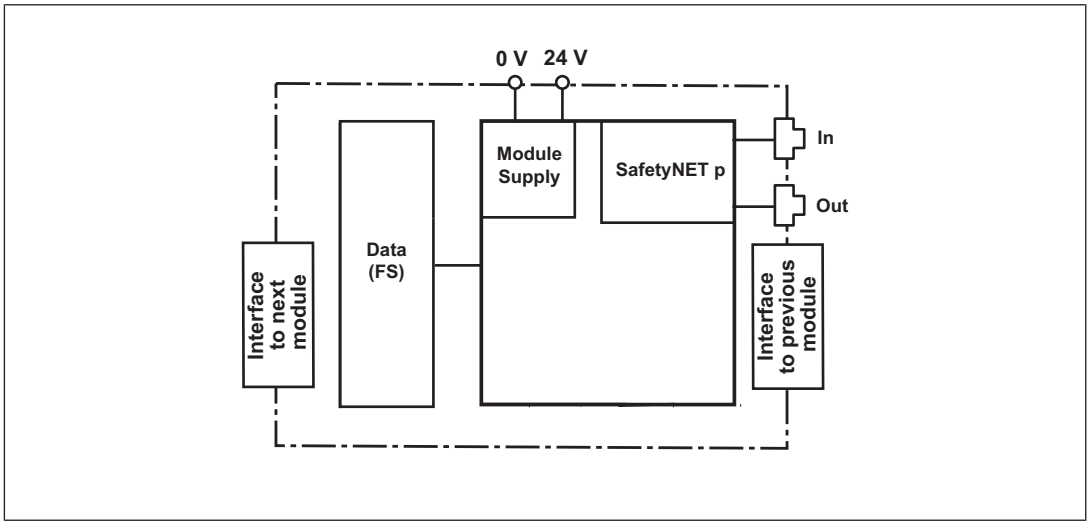

Installation

Mounting distances

With control cabinet installation it is essential to maintain a certain distance from the top and bottom, as well as to other heat-producing devices (see diagram). The values stated for the mounting distances are minimum specifications.

The ambient temperature in the control cabinet must not exceed the figure stated in the technical details. Air conditioning may otherwise be required.

Fieldbus modules
PNOZ m EF SafetyNET

Mounting distances:

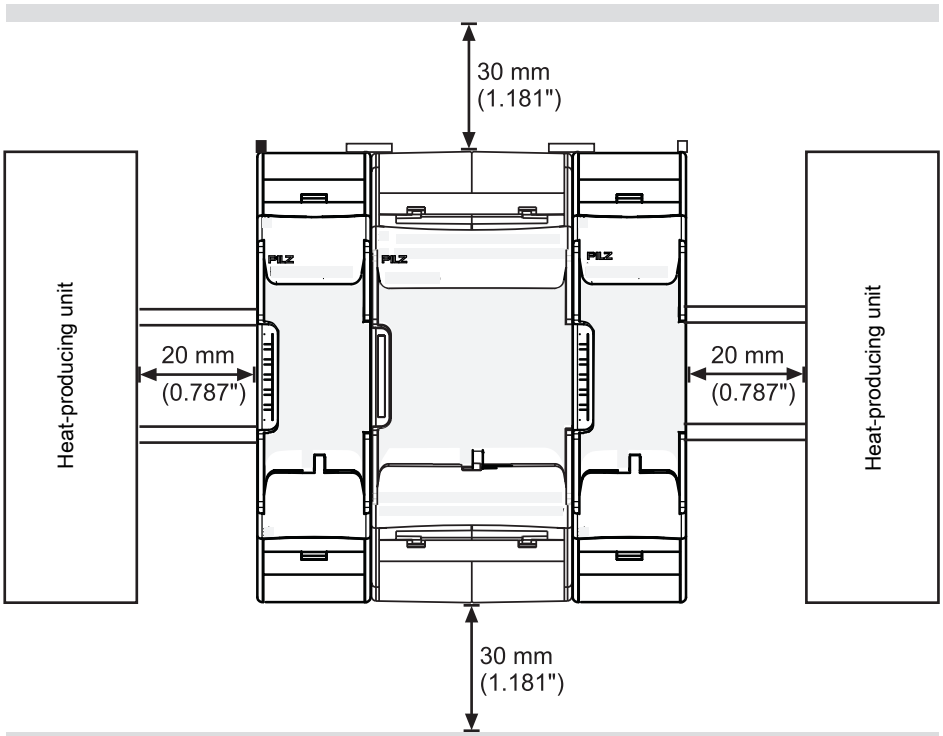

Dimensions in mm

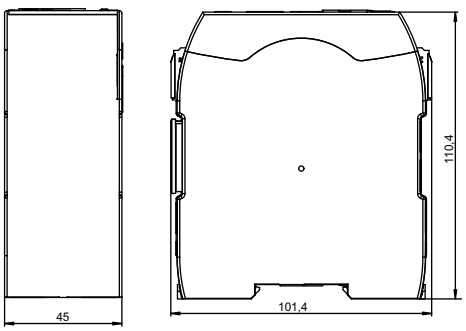

Fieldbus modules
PNOZ m EF SafetyNET

Commissioning

General wiring guidelines

The wiring is defined in the PNOZmulti Configurator user program.

Please note:

- Information given in the "Technical details [📖 1073]" must be followed.
- Use copper wiring with a temperature stability of 75 °C.
- The following minimum requirements of the connection cable and connector must be met:
  - Only use standard industrial Ethernet cable and connectors.
  - Only use double-shielded twisted pair cable and shielded RJ45 connectors (industrial connectors).
  - 100BaseTX cable in accordance with the Ethernet standard (min. category 5)
  - Use only straight through cables. Do not use crossover cables.
- The max. cable length between two modules may be max. 100 m.
- The power supply must meet the regulations for extra low voltages with protective electrical separation (SELV, PELV).

Connecting the supply voltage

Connect the supply voltage to the fieldbus module:

- **24 V** terminal: + 24 VDC
- **0 V** terminal: 0 V
- Protect the supply voltage as follows:
  - Circuit breaker, characteristic C - 6 A

    or
  - Blow-out fuse, slow, 6A

Fieldbus modules
PNOZ m EF SafetyNET

Interface assignment

RJ45 socket 8-pin	PIN	Standard
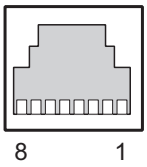	1	TD+ (Transmit+)
	2	TD- (Transmit-)
	3	RD+ (Receive+)
	4	n.c.
	5	n.c.
	6	RD- (Receive-)
	7	n.c.
	8	n.c.

n.c.: Not connected

Connect SafetyNET p subscribers

The SafetyNET p subscribers are networked in a linear topology. That is, all the SafetyNET p subscribers are combined without branches. To connect the SafetyNET p subscribers, proceed as follows:

- The X2 Out- interface of a SafetyNET p subscriber always has to be connected to the X1 In interface of the subscriber following in the line.
  Please note: The interfaces X2 Out and X1-In have no switch function.
- The X1 In interface of the first SafetyNET p subscriber and the X2 Out interface of the last SafetyNET p subscriber remain free.

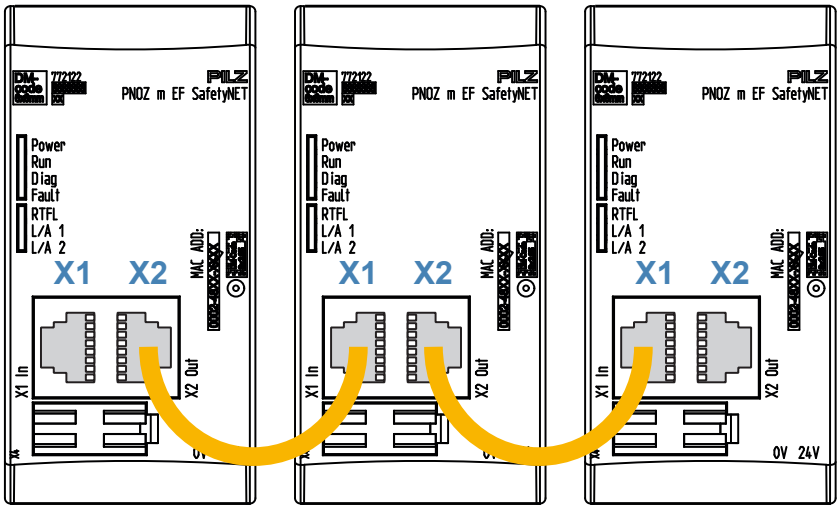

Fieldbus modules
PNOZ m EF SafetyNET

- The SafetyNET p subscribers can be connected in the SafetyNET p line in any sequence when all the PNOZmulti SafetyNET p subscribers have the same version. This has no influence on communication.

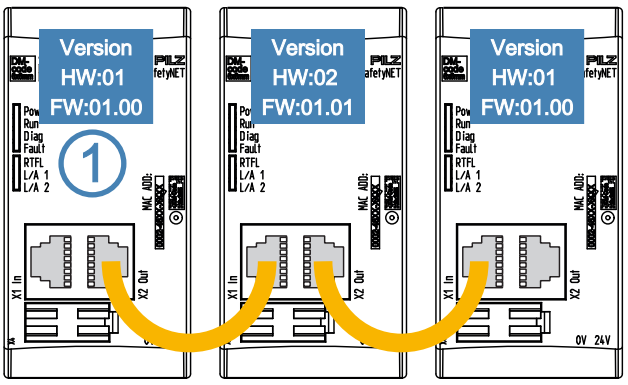

Fig.: SafetyNET p line with different versions of PNOZ m EF SafetyNET.

- Up to 16 SafetyNET p subscribers can be connected in a line structure.
- The SafetyNET p subscribers must be connected directly. No Ethernet switch must be interposed.

Fieldbus modules
PNOZ m EF SafetyNET

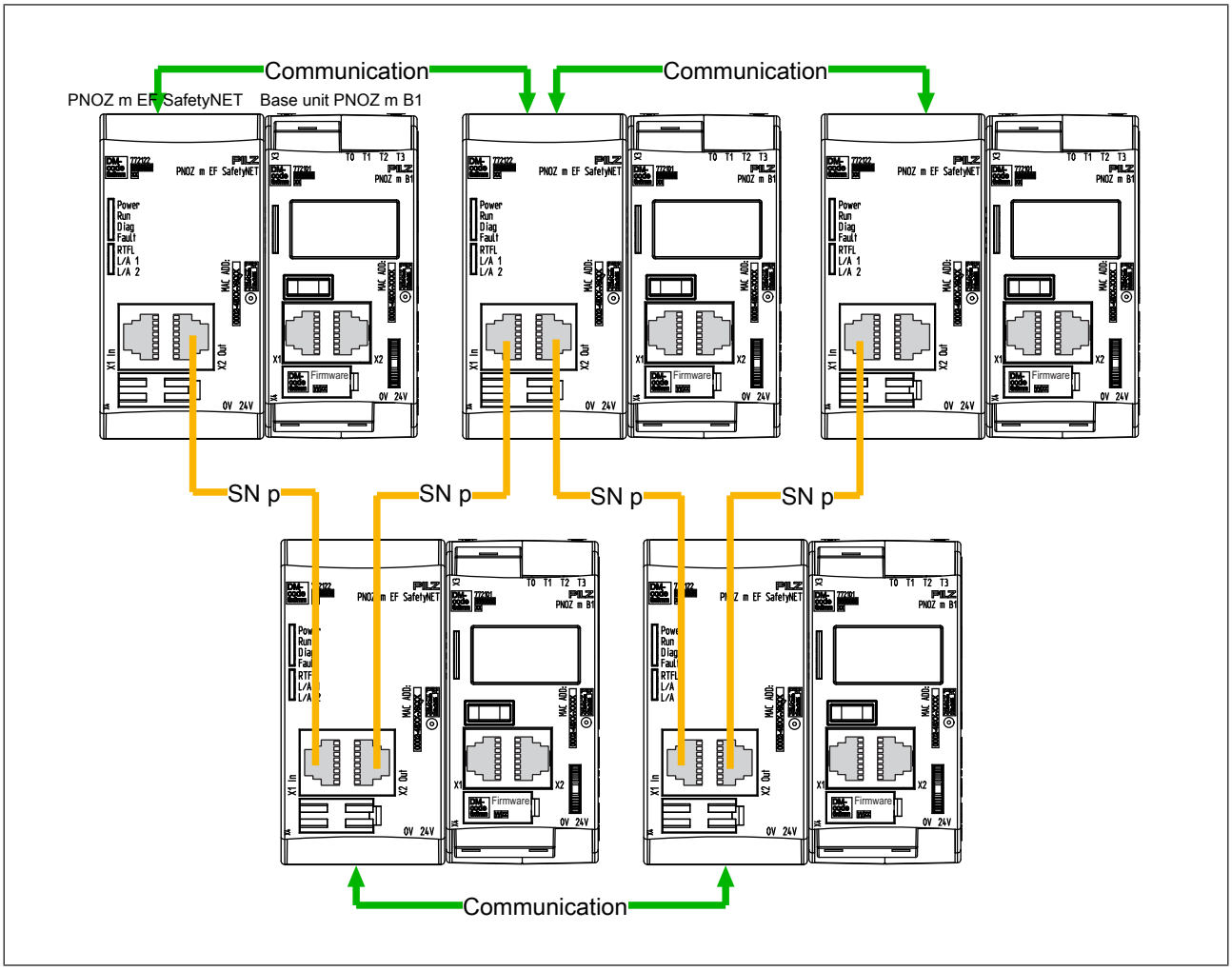

Fig.: SafetyNET p line with 5 SafetyNET p subscribers

Fieldbus modules
PNOZ m EF SafetyNET

Technical details

General	
Certifications	**CE, EAC (Eurasian), TÜV, cULus Listed**
Application range	**Failsafe**
Electrical data	
Supply voltage	
for	**Module supply**
Voltage	**24 V**
Kind	**DC**
Voltage tolerance	**-20 %/+25 %**
Max. continuous current that the external power supply must provide	**130 mA**
Output of external power supply (DC)	**3,2 W**
Potential isolation	**yes**
Supply voltage	
for	**Module supply**
internal	**Via base unit**
Voltage	**3,3 V**
Kind	**DC**
Current consumption	**60 mA**
Power consumption	**0,2 W**
Max. power dissipation of module	**3,5 W**
Status indicator	**LED**
Fieldbus interface	
Fieldbus interface	**SafetyNET p**
Device type	**Device**
Connection	**2 x RJ45**
Galvanic isolation	**yes**
Environmental data	
Ambient temperature	
In accordance with the standard	**EN 60068-2-14**
Temperature range	**0 - 60 °C**
Forced convection in control cabinet off	**55 °C**
Storage temperature	
In accordance with the standard	**EN 60068-2-1/-2**
Temperature range	**-25 - 70 °C**
Climatic suitability	
In accordance with the standard	**EN 60068-2-30, EN 60068-2-78**
Humidity	**93 % r. h. at 40 °C**
Condensation during operation	**Not permitted**

Fieldbus modules
PNOZ m EF SafetyNET

Environmental data	
Max. operating height above sea level	**2000 m**
EMC	**EN 61131-2**
Vibration	
In accordance with the standard	**EN 60068-2-6**
Frequency	**5 - 150 Hz**
Acceleration	**1g**
Shock stress	
In accordance with the standard	**EN 60068-2-27**
Acceleration	**15g**
Duration	**11 ms**
Airgap creepage	
In accordance with the standard	**EN 61131-2**
Overvoltage category	**II**
Pollution degree	**2**
Protection type	
In accordance with the standard	**EN 60529**
Housing	**IP20**
Terminals	**IP20**
Mounting area (e.g. control cabinet)	**IP54**
Potential isolation	
Potential isolation between	**Fieldbus and module voltage**
Type of potential isolation	**Functional insulation**
Rated surge voltage	**500 V**
Mechanical data	
Mounting position	**horizontally on mounting rail**
DIN rail	
Top hat rail	**35 x 7,5 EN 50022**
Recess width	**27 mm**
Material	
Bottom	**PC**
Front	**PC**
Top	**PC**
Connection type	**Spring-loaded terminal, screw terminal**
Mounting type	**plug-in**
Conductor cross section with screw terminals	
1 core flexible	**0,25 - 2,5 mm², 24 - 12 AWG**
2 core with the same cross section, flexible without crimp connectors or with TWIN crimp connectors	**0,2 - 1,5 mm², 24 - 16 AWG**
Torque setting with screw terminals	**0,5 Nm**
Conductor cross section with spring-loaded terminals: Flexible with/without crimp connector	**0,2 - 2,5 mm², 24 - 12 AWG**

Fieldbus modules
PNOZ m EF SafetyNET

Mechanical data	
Spring-loaded terminals: Terminal points per connection	**2**
Stripping length with spring-loaded terminals	**9 mm**
Dimensions	
Height	**101,4 mm**
Width	**45 mm**
Depth	**110,4 mm**
Weight	**180 g**

Where standards are undated, the 2017-06 latest editions shall apply.

Safety characteristic data

Operating mode	EN ISO 13849-1: 2015 PL	EN ISO 13849-1: 2015 Category	EN 62061 SIL CL	EN 62061 PFH_D [1/h]	IEC 61511 SIL	IEC 61511 PFD	EN ISO 13849-1: 2015 T_M [year]
–	**PL e**	**Cat. 4**	**SIL CL 3**	**1,54E-09**	**SIL 3**	**5,66E-05**	**20**

Explanatory notes for the safety-related characteristic data:

- The SIL CL value in accordance with EN 62061 corresponds to the SIL value in accordance with EN 61508.
- T_M is the maximum mission time in accordance with EN ISO 13849-1. The value also applies as the retest interval in accordance with EN 61508-6 and IEC 61511 and as the proof test interval and mission time in accordance with EN 62061.

All the units used within a safety function must be considered when calculating the safety characteristic data.

Fieldbus modules
PNOZ m EF SafetyNET

Order reference

Product

Product type	Features	Order no.
PNOZ m EF SafetyNET	Expansion module	772 122

Accessories

Cable and connector

Product type	Features	Order no.
SafetyNET p cable	CAT5e, sold by the metre	380000
RJ45 Connector	8-pin RJ45 male connector, straight, Cat 6a	380 401

Connection terminals and jumper

Product type	Features	Order no.
Spring terminals	Screw terminals, 1 piece	750 017
Spring terminals	Spring-loaded terminals, 1 piece	751 017
Jumper	PNOZ mm0.xp connector left (10 pcs)	779 260

PNOZmulti Configurator
PNOZmulti Configurator



Features

- Graphic configuration of safety circuit
- Project configuration, configuration generation, documentation, commissioning
- Data transfer via integrated interface or chip card
- User interface in German, English, French, Italian, Spanish, Japanese, Chinese (selectable)

System requirements

Please refer to the readme file for the PNOZmulti Configurator for details of the current system requirements.

Description

The PNOZmulti Configurator is a graphic tool for the configuration and programming of the configurable control system PNOZmulti.

The elements of the safety circuit are depicted as icons on the Configurator user interface.

The safety circuit can be created quickly and easily using drag & drop.

The PNOZmulti Configurator downloads the complete safety circuit to the PNOZmulti via a chip card or via the integrated interface.

The safety circuit can also be uploaded from the PNOZmulti to the PNOZmulti Configurator for revision.

PNOZmulti Configurator
PNOZmulti Configurator

Safety functions that can be created using the PNOZmulti Configurator include, for example:

- E-Stop
- Two-hand button
- Enabling switch
- Operating mode selector switches
- Press functions
- Light beam device
- Light grid
- Pressure sensitive mat
- Speed monitoring
- Muting

Users can configure fieldbus inputs and outputs in conjunction with the fieldbus modules. These inputs and outputs can only be used for standard functions.

Virtual inputs and outputs can be configured via the integrated interface. They are handled in exactly the same way as fieldbus inputs and outputs.

Inputs and outputs for standard functions are supported.

The PNOZmulti Configurator contains a wide range of test and diagnostic options, such as:

- Dynamic program display
- Diagnostic word for evaluating the element status
- Display PNOZmulti error stack

The project can be protected through passwords.

Licences and versions

In order to use the full scope of the PNOZmulti Configurator, you will need a valid licence in addition to the software package.

Without a licence, the PNOZmulti Configurator can only be used in a demo version.

A range of licences are available to meet varying requirements:

- **Basic licence**

  Single user licence, issued to one owner (company name and location/project must be stated)
- **User licence**

  Discounted licence for an additional workstation, issued to the owner of a basic licence.
- **Lite licence**

  Licence limited to the base units PNOZ m0p and the base units PNOZmulti Mini, for use on one workstation.

PNOZmulti Configurator

PNOZmulti Configurator

- **Multi user licence**

  Multi user licence, graduated according to the number of workstations (up to 25, 50, 100 and over 100)
- **Project licence**

  Licence to use the software within a contractually limited framework.
- **Basic/User/Multi user/Project upgrade licence**

  Discounted licence enabling owners of a licence to change to a newer version of the software
- **Time limited licence**

  Basic licence restricted to 2, 3 or 4 months

These licence types are available as a full version or service version.

Full version The full version provides the whole functional range of a licence.

Service version: The service version of a licence is suitable for service and maintenance. The service version only offers limited editing features.

The following functions are available on the respective versions:

Functions	Demo version	Service version	Full Version
Load and save error stack	x	x	x
Function elements	max. 10	Unlimited	Unlimited
Save project		x	x
Load project from hardware		x	x
Save project to hardware		x	x
Dynamic program display		x	x
Print function		x	x
Change project	x		x
Password level 1	x		x
Password level 2	x	x	x
Password level 3	x	x	x
Project write protection	x		x
Project read protection	x		x
Import / export	x		x
Create macro	x		x

PNOZmulti Configurator
PNOZmulti Configurator

Order reference

PNOZmulti Configurator	Features	Order No.
Software + Manual	CD and manual	773 000
Software	CD	773 000D
Basic Licence	Single user licence, issued to one owner (company name and location/project must be stated), full version	773 010B
User Licence	Discounted licence for an additional workstation, issued to the owner of a basic licence, full version	773 010K
Lite Licence	Licence limited to the PNOZ m0p and the base units PNOZmulti Mini, for use on one workstation, full version	773 010L
Multi User Licence	Multi user licence, graduated according to the number of workstations (up to 25, 50, 100 and over 100), full version	773 010M
Project Licence	Licence issued for a specific project. In contrast to the multi user licence, this licence is not limited to one legal entity. Full Version	773 010G
Basic Upgrade Licence	Discounted licence enabling owners of a basic licence to change to a newer version of the software, full version	773 010U
User Upgrade Licence	Discounted licence enabling owners of a user licence to change to a newer version of the software, full version	773 010V
Multi User Upgrade Licence	Discounted licence enabling owners of a multi user licence to change to a newer version of the software, full version	773 010N
Project Upgrade Licence	Discounted licence enabling owners of a project licence to change to a newer version of the software, full version	773 010W
Time Limited Licence, 2Mth	Basic licence restricted to 2 months, full version	773 010S
Time Limited Licence, 3Mth	Basic licence restricted to 3 months, full version	773 010R
Time Limited Licence, 4Mth	Basic licence restricted to 4 months, full version	773 010Q
Basic Licence, Service	Single user licence, issued to one owner (company name and location/project must be stated), service version	773 011B
User Licence, Service	Discounted licence for an additional workstation, issued to the owner of a basic licence, service version	773 011K
Lite Licence, Service	Licence limited to the PNOZ m0p and the base units PNOZmulti Mini, for use on one workstation, service version	773 011L
Multi User Licence, Service	Multi user licence, graduated according to the number of workstations (up to 25, 50, 100 and over 100), service version	773 011M
Project Licence, Service	Licence issued for a specific project. In contrast to the multi user licence, this licence is not limited to one legal entity. Service Version	773 011G
Basic Upgrade Licence, Service	Discounted licence enabling owners of a basic licence to change to a newer version of the software, service version	773 011U

PNOZmulti Configurator
PNOZmulti Configurator

PNOZmulti Configurator	Features	Order No.
User Upgrade Licence, Service	Discounted licence enabling owners of a user licence to change to a newer version of the software, service version	773 011V
Multi User Upgrade Licence, Service	Changing a multi user licence to a newer version of the software (discounted), service version	773 011N
Project Upgrade Licence, Service	Discounted licence enabling owners of a project licence to change to a newer version of the software, service version	773 011W

Contents	Page
Software, chip card, USB memory	1084
Cable, adapter	1086
Connectors, terminals	1091

Software, chip card, USB memory

Tool Kit, chip card	Order no.
Tool Kit, in a carry case, consisting of: PNOZmulti Configurator software and manual, German (773 000), chip card and set of 10 labels, chip card reader, programming cable, magnetic safety switch, 5 m connection cable, bracket	779000
Chip card 8 kByte, 1 pieces	779201
Chip card, 8 kByte, 10 pieces	779200
Chip card 32 kByte, 1 pieces	779211
Chip card 32 kByte, 10 pieces	779212
Chip card holder	779240
Chip card reader	779230
Labels for chip card, seal, 10 pieces	779250
Accessories package, set of plug-in, spring-loaded terminals PNOZmulti classic and PNOZmulti chip card 32 kB	779126
USB memory, 512 MB	779213
Adapter for converting USB interface to RS232	305160

Software, licences	Order no.
PNOZmulti Configurator, software on CD plus manual	773000
PNOZmulti Configurator, software on CD	773000D
PNOZmulti Configurator, Basic Licence	773010B
PNOZmulti Configurator, User Licence	773010K
PNOZmulti Configurator, Lite Licence	773010L
PNOZmulti Configurator, Project Licence	773010G
PNOZmulti Configurator, Multi User Licence	773010M
PNOZmulti Configurator, Basic Upgrade Licence	773010U
PNOZmulti Configurator, User Upgrade Licence	773010 V
PNOZmulti Configurator, Project Upgrade Licence	773010W
PNOZmulti Configurator, Multi User Upgrade Licence	773010N
PNOZmulti Configurator, Time Limited Licence, 2 months	773010S
PNOZmulti Configurator, Time Limited Licence, 3 months	773010R
PNOZmulti Configurator, Time Limited Licence, 4 months	773010Q
PNOZmulti Service Tool, Basic Licence	773011B
PNOZmulti Service Tool, User Licence	773011K
PNOZmulti Service Tool, Lite Licence	773011L
PNOZmulti Service Tool, Project Licence	773011G

Software, chip card, USB memory

Software, licences	Order no.
PNOZmulti Service Tool, Multi User Licence	773011M
PNOZmulti Service Tool, Basic Upgrade Licence	773011U
PNOZmulti Service Tool, User Upgrade Licence	773011 V
PNOZmulti Service Tool, Project Upgrade Licence	773011W
PNOZmulti Service Tool, Multi User Upgrade Licence	773011N

Cable, adapter

Cable, adapter	Order no.
PSS SB BUSCABLE LC cable, shielded, 1 -100 m	311074
PSSu A USB-CAB03 Mini-USB cable, 3 m	312992
PSSu A USB-CAB05 Mini-USB cable, 5 m	312993
SafetyNET p cable, 1 - 500 m	380000
PSS67 Cable, M8sf M12sm cable, straight M12 connector, straight M8 socket, 4-pin, 3m	380200
PSS67 Cable, M8sf M12sm cable, straight M12 connector, straight M8 socket, 4-pin, 5m	380201
PSS67 Cable, M8sf M12sm cable, straight M12 connector, straight M8 socket, 4-pin, 10m	380202
PSS67 Cable, M8sf M12sm cable, straight M12 connector, straight M8 socket, 4-pin, 30m	380203
PSS67 Cable, M8af M12sm cable, straight M12 connector, angled M8 socket, 4-pin, 3m	380204
PSS67 Cable, M8af M12sm cable, straight M12 connector, angled M8 socket, 4-pin, 5m	380205
PSS67 Cable, M8af M12sm cable, straight M12 connector, angled M8 socket, 4-pin, 10m	380206
PSS67 Cable, M8af M12sm cable, straight M12 connector, angled M8 socket, 4-pin, 30m	380207
PSS67 Cable, M12sf M12sm cable, straight M12 connector, straight M12 socket, 5-pin, 3m	380208
PSS67 Cable, M12sf M12sm cable, straight M12 connector, straight M12 socket, 5-pin, 5m	380209
PSS67 Cable, M12sf M12sm cable, straight M12 connector, straight M12 socket, 5-pin, 10m	380210
PSS67 Cable, M12sf M12sm cable, straight M12 connector, straight M12 socket, 5-pin, 30m	380211
PSS67 Cable, M12af M12am cable, angled M12 connector, angled M12 socket, 5-pin, 3m	380212
PSS67 Cable, M12af M12am cable, angled M12 connector, angled M12 socket, 5-pin, 5m	380213
PSS67 Cable, M12af M12am cable, angled M12 connector, angled M12 socket, 5-pin, 10m	380214
PSS67 Cable, M12af M12am cable, angled M12 connector, angled M12 socket, 5-pin, 30m	380215
PSS67 Cable M12sf, M12sm, 20m	380220
PSS67 Supply Cable IN sf OUT sm, B, 3m	380250
PSS67 Supply Cable IN sf OUT sm, B, 5m	380251

Cable, adapter

Cable, adapter	Order no.
PSS67 Supply Cable IN sf OUT sm, B, 10m	380252
PSS67 Supply Cable IN sf, B, 3m	380256
PSS67 Supply Cable IN sf, B, 5m	380257
PSS67 Supply Cable IN sf, B, 10m	380258
PSEN ma adapter for connection to safety switch PSENmag	380300
PSEN cs adapter for connection to safety switch PSENcode	380301
PSS67 M12 connector, plug, M12, straight, 5-pin, A-coded	380308
PSS67 M12 connector, socket, M12, straight, 5-pin, A-coded	380309
PSS67 M12 connector, plug, M12, angled, 5-pin, A-coded	380310
PSS67 M12 connector, socket, M12, angled, 5-pin, A-coded	380311
PSS67 M8 connector, plug, M8, straight, 4-pin	380316
PSS67 M8 connector, socket, M8, straight, 4-pin	380317
PSS67 M8 connector, plug, M8, angled, 4-pin	380318
PSS67 M8 connector, socket, M8, angled, 4-pin	380319
PSS67 I/O Cable, 1 - 30 m	380320
PSEN sl adapter	380325
SafetyNET p Connector RJ45 – RJ45 plug-in connector	380400
PDP67 cable M12-5sm, 5m, open-ended	380705
PDP67 cable M12-5sm, 10m, open-ended	380706
PDP67 cable M12-5sm, 10m, open-ended	380707
PDP67 cable M12-5sm, 30m, open-ended	380708
PDP67 cable M12-5sm, 3m, open-ended	380709
MM A MINI-IO-CAB01 1.5m	772200
MM A MINI-IO-CAB01 2.5m	772201
MM A MINI-IO-CAB01 5m	772202
MM A MINI-IO CAB01B 5.0M	772210
MM A MINI-IO CAB01A 2.5M	772211
MM A MINI-IO CAB01B 2.5M	772212
MM A MINI-IO CAB03A 2.5M	772213
MM A MINI-IO CAB03B 2.5M	772214
MM A MINI-IO CAB01A 5M	772215
MM A MINI-IO CAB01A 1.5M	772216
MM A MINI-IO CAB01B 1.5M	772217
MM A MINI-IO CAB02A 2.5M	772218

Cable, adapter

Cable, adapter	Order no.
MM A MINI-IO CAB02B 2.5M	772219
MM A MINI-IO CAB19 1.5M	772220
MM A MINI-IO CAB19 2.5M	772221
MM A MINI-IO CAB19 5M	772222
MM A MINI-IO CAB19 0.7/1.5M	772223
MM A MINI-IO CAB19 0.7/5M	772225
MM A MINI-IO CAB05 2.5M	772230
MM A MINI-IO CAB05 1.5M	772231
MM A MINI-IO CAB06 2.5M	772233
MM A MINI-IO CAB06 1.5M	772234
MM A MINI-IO CAB08 2.5M	772235
MM A MINI-IO CAB08 1.5M	772236
MM A MINI-IO CAB07 2.5M	772237
MM A MINI-IO CAB07 1.5M	772238
MM A MINI-IO CAB06 7.5M	772239
MM A MINI-IO CAB16 2.5M	772240
MM A MINI-IO CAB12 2.5M	772241
MM A MINI-IO CAB06 5M	772243
MM A MINI-IO CAB15 2.5M	772244
MM A MINI-IO CAB17 5M	772245
MM A MINI-IO CAB14 2.5M	772246
MM A MINI-IO CAB20 2.5	772247
MM A MINI-IO CAB19 7.5M	772248
MM A MINI-IO CAB17 2.5M	772249
MM A MINI-IO CAB17 1.5M	772250
MM A MINI-IO CAB03B R 2.5M	772251
MM A MINI-IO CAB03A 5M	772252
MM A MINI-IO CAB09B 2.5M	772260
PNOZ msi22Ap adapter B&R ACOPOS 2.5M for speed monitor PNOZ msxp	773832
PNOZ msi1Bp adapter and cable, 25-pin, 5.0 m for speed monitor PNOZ msxp	773839
PNOZ msi1Ap adapter and cable, 25-pin, 2.5 m for speed monitor PNOZ msxp	773840
PNOZ msi1Bp adapter and cable, 25-pin, 2.5 m for speed monitor PNOZ msxp	773841
PNOZ msi3Ap adapter and cable, 15-pin, 2.5 m for speed monitor PNOZ msxp	773842
PNOZ msi3Bp adapter and cable, 15-pin, 2.5 m for speed monitor PNOZ msxp	773843

Cable, adapter

Cable, adapter	Order no.
PNOZ msi1Ap adapter and cable, 25-pin, 5.0 m for speed monitor PNOZ msxp	773844
PNOZ msi b4 Box	773845
PNOZ msi19p connection cable, 1.5 m for PNOZ ms2p/PNOZ ms3p/PNOZ ms4p	773846
PNOZ msi19p connection cable, 2.5 m for PNOZ ms2p/PNOZ ms3p/PNOZ ms4p	773847
PNOZ msi4Bp adapter and cable, 15-pin, 5 m for speed monitor PNOZ msxp	773848
PNOZ msi4Bp adapter and cable, 15-pin, 2.5 m for speed monitor PNOZ msxp	773849
PNOZ msi1p adapter and cable, 25-pin, 2.5 m for speed monitor PNOZ msxp	773850
PNOZ msi2p adapter and cable, 25-pin, 1.5 m for speed monitor PNOZ msxp	773851
PNOZ msi3p adapter and cable, 25-pin, 2.5 m for speed monitor PNOZ msxp	773852
PNOZ msi4p adapter and cable, 25-pin, 1.5 m for speed monitor PNOZ msxp	773853
PNOZ msi10p adapter cable 2.5 m for speed monitor PNOZ msxp	773854
PNOZ msi11p adapter cable 1.5 m for speed monitor PNOZ msxp	773855
PNOZ msi9p adapter cable 5.0 m for speed monitor PNOZ msxp	773856
PNOZ msi5p adapter and cable, Bos/Rex, 15-pin, 2.5 m for speed monitor PNOZ msxp	773857
PNOZ msi5p adapter and cable, Bos/Rex, 15-pin, 1.5 m for speed monitor PNOZ msxp	773858
PNOZ msi6p adapter and cable, Elau, 9-pin, 7.5 m for PNOZ ms2p/PNOZ ms3p/ PNOZ ms4p	773859
PNOZ msi6p adapter and cable, Elau, 9-pin, 2.5 m for PNOZ ms2p/PNOZ ms3p/ PNOZ ms4p	773860
PNOZ msi6p adapter and cable, Elau, 9-pin, 1.5 m for PNOZ ms2p/PNOZ ms3p/ PNOZ ms4p	773861
PNOZ msi8p adapter and cable, Lenze, 9-pin, 2.5 m for speed monitor PNOZ msxp	773862
PNOZ msi8p adapter and cable, Lenze, 9-pin, 1.5 m for speed monitor PNOZ msxp	773863
PNOZ msi7p adapter and cable, SEW, 15-pin, 2.5 m for speed monitor PNOZ msxp	773864
PNOZ msi7p adapter and cable, SEW, 15-pin, 1.5 m for speed monitor PNOZ msxp	773865
PNOZ msi4Bp adapter and cable RJ45 and 25-pin, 1.5 m for speed monitor PNOZ msxp	773866
PNOZ msi16p adapter, Baumuell, 15/15 2.5m	773867
PNOZ msi12p Rockwell 15/15 2.5m	773868
PNOZ msi13p Fanuc 20/20 2.5m	773869
PNOZ msi S09 9-pin adapter for speed monitor PNOZ msxp, connector set	773870
PNOZ msi S15 15-pin adapter for speed monitor PNOZ msxp, connector set	773871
PNOZ msi S25 25-pin adapter for speed monitor PNOZ msxp, connector set	773872
PNOZ msi 6p ELAU RJ45 and 9-pin adapter for speed monitor PNOZ msxp	773873

Cable, adapter

Cable, adapter	Order no.
PNOZ msi15p adapter, Tendo, 15/15 2.5m	773874
PNOZ msi17p Bos/Rex 15/15 5.0m	773875
PNOZ msi1Ap Si/He 25/25 1.5m	773876
PNOZ msi1Bp Si/He 25/25 5.0m	773877
PNOZ msi14p Leroy 15/15 2.5m	773878
PNOZ MSI20P PARKER HD 15/15 2.5M	773879
PNOZ msi b1 Box 15p	773880
PNOZ msi b0 cable 15/RJ45	773881
PNOZ msi b1 Box 9p	773882
PNOZ msi b1 Box 25p	773883
PNOZ msi b0 cable 25/RJ45	773884
PNOZ msi21p Bos/Rex 15/15 2.5m	773885
PNOZ msi21p Bos/Rex 15/15 1.5m	773886
PNOZ msi18p Bos/Rex 15/15 1.5m	773888
PNOZ mli1p 5m screw, 5-pin cable, shielded, screw terminal, 5 m	773890
PNOZ mli1p 10m screw, 5-pin cable, shielded, screw terminal, 10 m	773891
PNOZ mli1p 50m screw, 5-pin cable, shielded, screw terminal, 50 m	773892
PNOZ mli1p 5m spring, 5-pin cable, shielded, spring-loaded terminal, 5 m	773893
PNOZ mli1p 10m spring, 5-pin cable, shielded, spring-loaded terminal, 10 m	773894
PNOZ mli1p 50m spring, 5-pin cable, shielded, spring-loaded terminal, 50 m	773895
PNOZ mli1p 50m spring, 5-pin cable, shielded, spring-loaded terminal, 1.5 m	773896
PNOZ mli1p 50m screw, 5-pin cable, shielded, screw terminal, 5 m	773897
KOP-XE - Jumper	774639
PNOZmulti bus terminator	779110
PNOZmulti bus terminator coated	779112
Connector plug	779260
Terminating plug	779261

Connectors, terminals

For details of the respective connection terminals, terminators and jumpers, please refer to the data sheets for the relevant products.

Support

Technical support is available from Pilz round the clock.

Americas
Brazil
+55 11 97569-2804
Canada
+1 888-315-PILZ (315-7459)
Mexico
+52 55 5572 1300
USA (toll-free)
+1 877-PILZUSA (745-9872)

Asia
China
+86 21 60880878-216
Japan
+81 45 471-2281
South Korea
+82 31 450 0680

Australia
+61 3 95446300

Europe
Austria
+43 1 7986263-0
Belgium, Luxembourg
+32 9 3217575
France
+33 3 88104000
Germany
+49 711 3409-444
Ireland
+353 21 4804983
Italy
+39 0362 1826711
Scandinavia
+45 74436332
Spain
+34 938497433
Switzerland
+41 62 88979-30
The Netherlands
+31 347 320477
Turkey
+90 216 5775552
United Kingdom
+44 1536 462203

You can reach our international hotline on:
+49 711 3409-444
support@pilz.com

Pilz develops environmentally-friendly products using ecological materials and energy-saving technologies. Offices and production facilities are ecologically designed, environmentally-aware and energy-saving. So Pilz offers sustainability, plus the security of using energy-efficient products and environmentally-friendly solutions.

Energy saving by Pilz

BLUECOMPETENCE Alliance Member
Partner of the Engineering Industry Sustainability Initiative

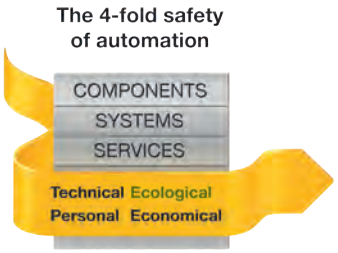

Presented by:

pilz
Partner of:
The Best of German Engineering

Pilz GmbH & Co. KG
Felix-Wankel-Straße 2
73760 Ostfildern, Germany
Tel.: +49 711 3409-0
Fax: +49 711 3409-133
info@pilz.com
www.pilz.com

PILZ
THE SPIRIT OF SAFETY

1001153-EN-12, 2021-10 Printed in Germany
© Pilz GmbH & Co. KG, 2015

CMSE®, InduraNET p®, PAS4000®, PAScal®, PASconfig®, Pilz®, PIT®, PLID®, PMCprimo®, PMCprotego®, PMCtendo®, PMD®, PMI®, PNOZ®, Primo®, PSEN®, PSS®, PVIS®, SafetyBUS p®, SafetyEYE®, SafetyNET p®, THE SPIRIT OF SAFETY® are registered and protected trademarks of Pilz GmbH & Co. KG in some countries. We would point out that product features may vary from the details stated in this document, depending on the status at the time of publication and the scope of the equipment. We accept no responsibility for the validity, accuracy and entirety of the text and graphics presented in this information. Please contact our Technical Support if you have any questions.