Installation Instructions

Instrucciones de instalación, Instructions d'installation, Installationsanleitung, إرشادات التركيب
Installatie-instructies, Instruções de instalação, Installatie-instructies,
設置手順説明, **Οδηγίες εγκατάστασης**

Product Code: [**AMALL_/1**]



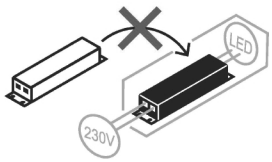

Master Translations QR Link

IP 20

POLY

12 linklights can be connected in one continous run

1

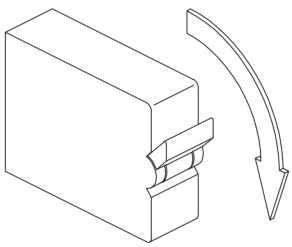

OFF

2

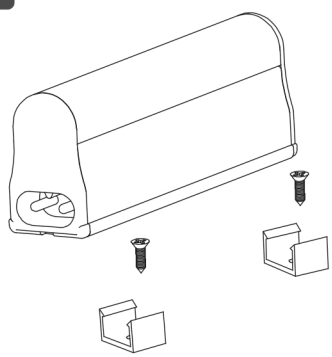

3

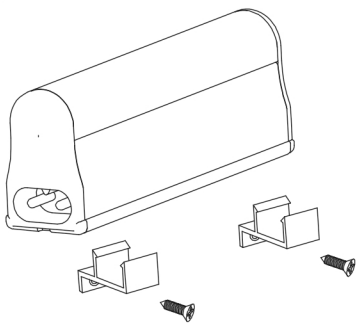

4

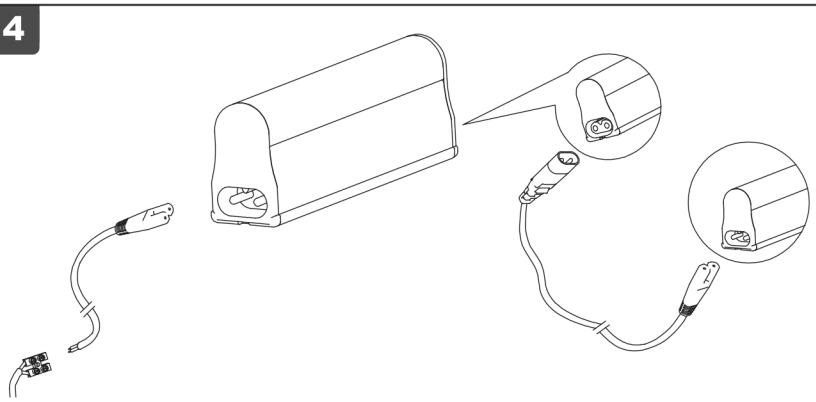

5



6

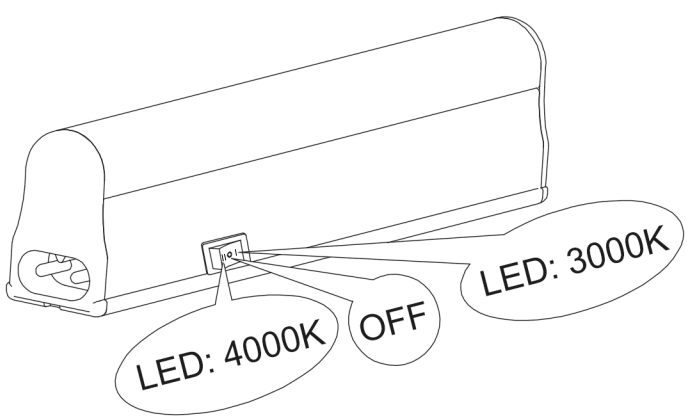

7

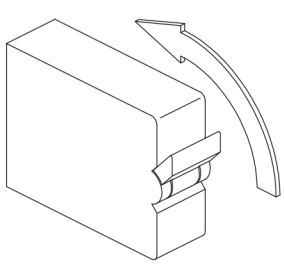

ON

Ansell Electrical Products
Unit 6B, Stonecross Industrial Park,
Yew Tree Way,
Warrington,
WA3 3JD
Warrington Tel: +44 (0)1942 433333

Ansell (Sales & Distribution)
Unit 2, M2 Business Park,
Duncrue Street,
Belfast,
BT3 9AQ
Belfast Tel: +44 (0)2890 773750

Ansell (Sales & Distribution) Republic of Ireland Limited
Unit G1, Block G,
Calmount Park, Calmount Avenue
Dublin 12,
D12 TH56
International Tel: +44 (0)1942 433343

www.ansell-lighting.com
Spain Tel: 00 34 938 005642

Issue Number: [1]