FSE 416

Tailor-made radio receiver technology for standard industrial cranes.



Scale 1:1,5

Type tested · Production monitored · TÜV SÜD · C US

Quality in Control.





HBC radiomatic

FSE 416

Technical Data

Radio receiver	FSE 416		
Combined with	quadrix, micron 5, eco, spectrum 1		
Control concept	Point-to-point, catch-release, combined operation, pre-selection of trolley / hoist		
Output elements	17 relays		
Control functions	Up to 17 commands (on / off)		
Indication	LEDs: operating status		
Safety	E-STOP: PL d category 3 according to EN ISO 13849-1:2015 / SIL2		
Frequency ranges	**ISM bands**	**Channel spacing**	**Radiated power**
	Country-specific use: 400 – 488 MHz 863 – 870 MHz 902 – 928 MHz	12,5 / 25 kHz 25 kHz 25 kHz	max. 10 mW
	Country-independent use: TC242: 2402 – 2480 MHz	1 MHz	max. 100 mW
	Country-specific use: DECT: 1790 – 1930 MHz	1,728 MHz	max. 250 mW
Frequency management	Fixed frequency, radiomatic® AFS, radiomatic® AFM, Adaptive Frequency Hopping, DECT		
Antenna	External		
Power supply	24 – 48 V AC 42 – 240 V AC		
Connection & mounting	Cable glands; mounting by screws and snap-in wall bracket		
Housing material	PC-ABS UL94 V-0		
Weight	680 g (1.5 lb.)		
Operating temperature	-25 °C … +70 °C (-4 °F … +158 °F)		
Certificates (TÜV Süd)	UL/CSA 61010-1, UL/CSA 61010-2-201; Certificate No. U10 031016 0008 Rev. 00		

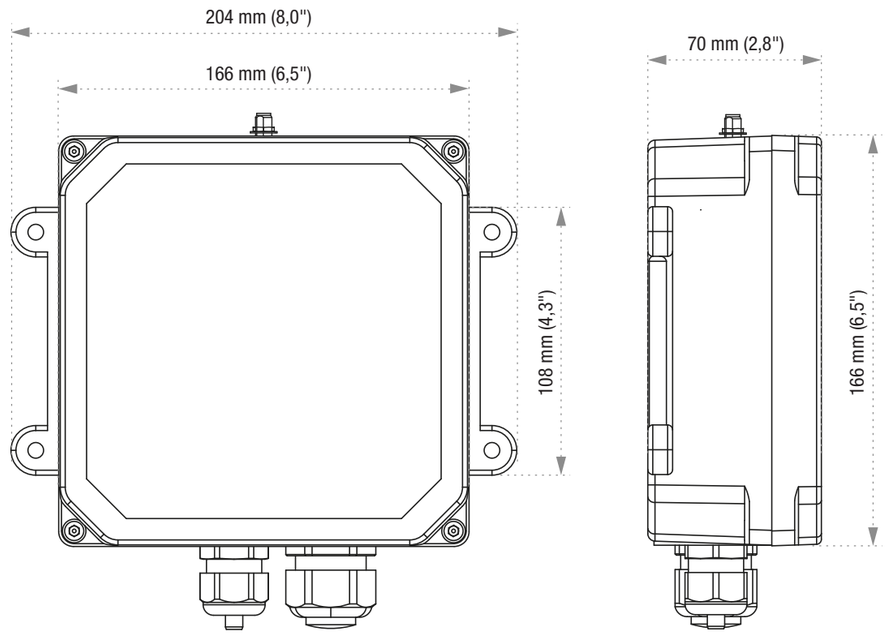

© 2024 HBC-radiomatic GmbH | Pl_2_FSE_416 | 15/2024 | Specifications and design subject to change without notice! No part of this document may be reproduced in any manner whatsoever without the expressed written permission of HBC-radiomatic GmbH.

HBC radiomatic

HBC-radiomatic GmbH • Haller Strasse 45 – 53 • 74564 Crailsheim • Germany
Telefon +49 7951 393-0 • info@radiomatic.com

FSE 416

First-class, state-of-the-art HBC design in the best HBC quality: this is the FSE 416 radio receiver. Its tailor-made equipment package is ideal for the wireless control of hoists and standard industrial cranes. With its compact housing, the FSE 416 is quick and easy to install. Its worldwide power supply unit enables flexible use around the globe.

Valuable features at a glance:





Certification according to UL/CSA 61010

Ideally suitable for the North American market

With an UL/CSA 61010-1 and UL/CSA certification 61010-2-201, the FSE 416 is ideally suitable for the North American market.

Tailor-made equipment

Ideally suitable for 3 or 4 drives

With 17 relays, the FSE 416 is the perfect choice for hoists and industrial cranes with 3 or 4 drives. Furthermore, valuable features such as trolley or hoist pre-selection can be implemented.

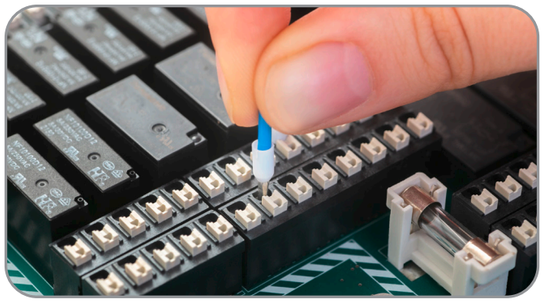

Wiring via push-in connections

Convenient and time-saving

The receiver is wired quickly and easily via push-in connections, without the need for time-consuming screw terminals. This saves valuable time during installation.

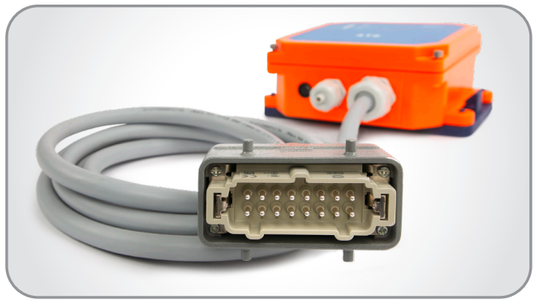

Optionally available with connection cable

The plug & play solution for maximum comfort

The FSE 416 is optionally available with the appropriate connection cable for the respective crane type. This enables a very fast and convenient installation.



Recommended transmitters:



quadrix ***micron 5*** ***eco*** ***spectrum 1***