SecureEdge Gateway

IXON's SecureEdge gateway puts security at the core of machine connectivity. The gateway enables machine builders to securely connect to, monitor and manage their machines and installations with ease.



Industry-grade security

Security is at the core of the SecureEdge. It's engineered following the IEC 62443 standard for cybersecurity in industrial automation and control systems, and has achieved IEC 62443-4-2 certification after a thorough auditing process.

Everything in one device

The SecureEdge gateway is a firewall, remote access gateway and data logger in one device. This enables you to connect and manage machines and installations without complex infrastructure or separate components.

Fast and easy-to-use

The industrial edge gateway is designed for effortless installation. Simply scan the QR code on the touch display, and the gateway is ready to use within minutes. The SecureEdge also ensures reliable and high-speed connections, delivering optimal network performance.

SecureEdge gateway: The next level in machine connectivity

SecureEdge versions				
Model	**IX5000**	**IX5010**	**IX5005**	**IX5015**
WiFi client and Hotspot	✗	✓	✗	✓
4G Global	✗	✗	✓	✓
GPS	✗	✗	✓	✓
Ethernet ports	3 x LAN, 1 x WAN (factory network / cloud) 1x configurable port for LAN or factory network			
System				
CPU	Quad-Core ARM Cortex-A53 1.8 GHz			
Memory (RAM)	1GB LPDDR4			
Storage	32GB eMMC in pSLC mode for reliability, with 5GB user space			
Power supply	12-24 VDC +/- 20%			
Max. power consumption	15 W			
Expandable storage	No			
Interfaces				
Ethernet	5x RJ45, 1 Gbps (3x LAN; 1x WAN; 1x OT/LAN)			
I / O	Configurable pin for Input or Output			
Other hardware	USB 2.0 (type C), eSIM, TPM 2.0, Nano sim card (4FF)			
Touchscreen	0.96" monochrome OLED display, capacitive touch panel			
Led indicators	Power indicator, OT/LAN network indicator			
Physical characteristics				
Dimensions	112x101x31 mm (H x D x W)			
Weight	Approx. 0.3 kg			
Mounting	DIN rail			
Housing material	Cast aluminium heat sink, ABS plastic			
WiFi specifications (IX6010 and IX6015)				
WiFi version	IEEE 802.11bgnac (WiFi 5)			
Frequency	2.4 Ghz, 5 Ghz			
Speed (data rate)	Up to 867 Mbps			
Security	WEP, WPA, WPA2			
Modes	Access Point, Station			
Contains FCC ID	2AATL-8274B-PR			
Contains IC ID	24844-8274BPR			

Cellular / GNSS specifications (IX6005 and IX6015)	
Frequency bands	**LTE-FDD:** B1, B2, B3, B4, B5, B7, B8, B12, B13, B18, B19, B20, B25, B26, B28 LTE-TDD: B38, B39, B40, B41 **WCDMA:** B1, B2, B4, B5, B6, B8, B19 **GSM/GPRS/EDGE:** B2, B3, B5, B8 **GNSS:** GPS, GLONASS, BeiDou, Galileo and QZSS
Speed (data rates)	**LTE-FDD:** Max. 150 Mbps (download) / Max. 50 Mbps (upload); **LTE-TDD:** Max. 130 Mbps (download) / Max. 30 Mbps (upload); **DC-HSPA+:** Max. 42 Mbps (download) / Max. 5.76 Mbps (upload); **WCDMA:** Max. 384 Kbps (download) / Max. 384 Kbps (upload); **EDGE:** Max. 296 Kbps (download) /Max. 236.8 Kbps (upload); **GPRS:** Max. 107 Kbps (download) / Max. 85.6 Kbps (upload)
SIM card	NanoSIM (4FF)
Contains FCC ID	XMR201903EG25G
Contains IC ID	10224A-201903EG25G
Environmental	
Operating temperature	-25°C to 60°C
Storage temperature	-25°C to 60°C
Humidity	10 to 95% non-condensing
Operating altitude	Up to a maximum of 2.000m
Protection class	IP20
Processor cooling	Passive with cast aluminium heat sink
Software	
Operating system	Linux-based
Docker apps	No
Industrial protocols & IoT	OPC-UA, Modbus TCP, Siemens S7, Ethernet/IP, MELSEC, BACnet/ip and plain-text TCP. Support for MQTT to 3rd party cloud providers
Firmware management	Remote updates; via WAN and firmware-over-the-air (FOTA)
Configuration	Web server, USB-C, display, automatic registration
Security	IEC 62443-4-1 (Secure Software Development) and IEC 62443-4-2: (Secure Components) certified. Security Level 2 TPM 2.0 to secure cryptographic keys
Other software features	Remote access via USB-over-IP, local NTP server to keep time synced, local API for status and configuration from PLC

Dimensions - Technical drawing

Scale 1:2, dimensions in mm.

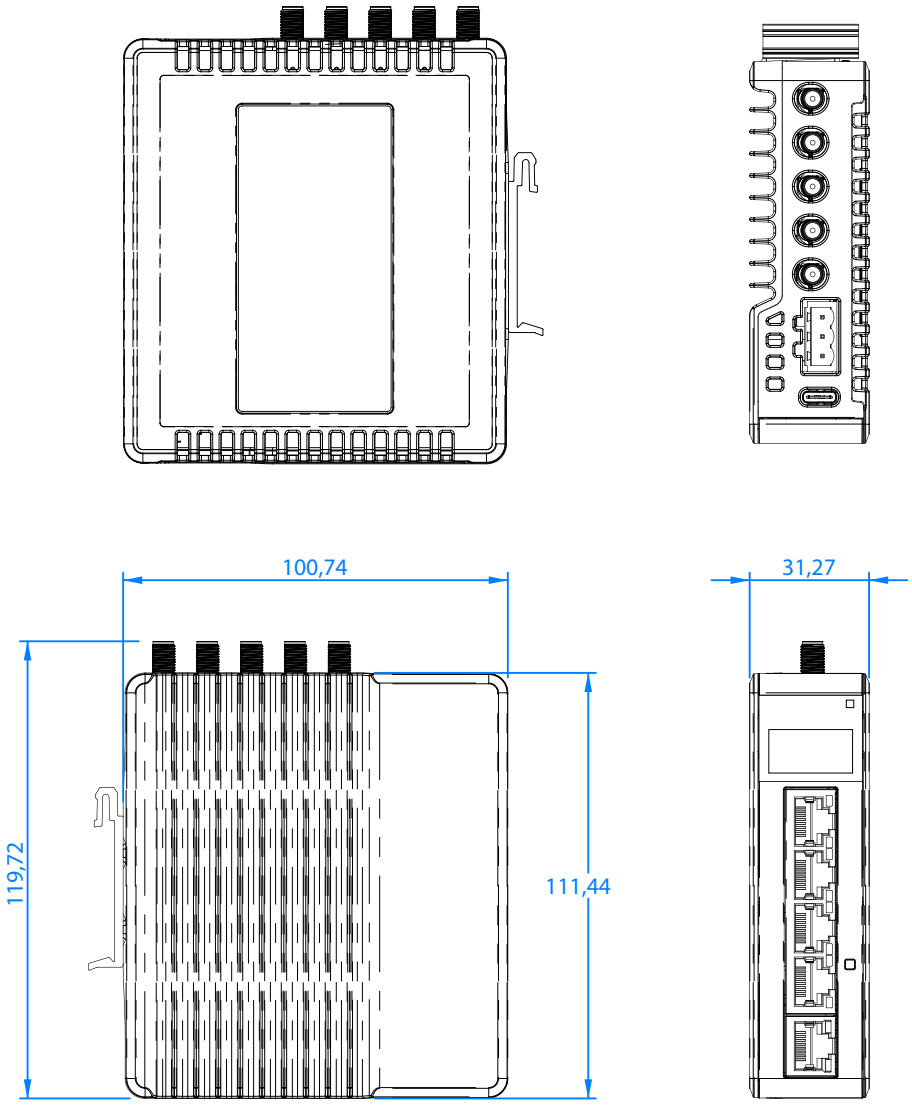

Want to find out more?

Learn more about IXON's solutions and visit:
www.ixon.cloud

If you have any questions, please visit:
www.ixon.cloud/contact

IXON