Description:
Material: -103 Thermoplastic co-polymer material, electrically insulating, non-tracking, erosion and UV-resistant, flexible at low temperatures.
Adhesive/Sealant: /89 - Track resistant sealant provides water tight and environmental seal.
Application: Extra creepage path for MV Terminations.

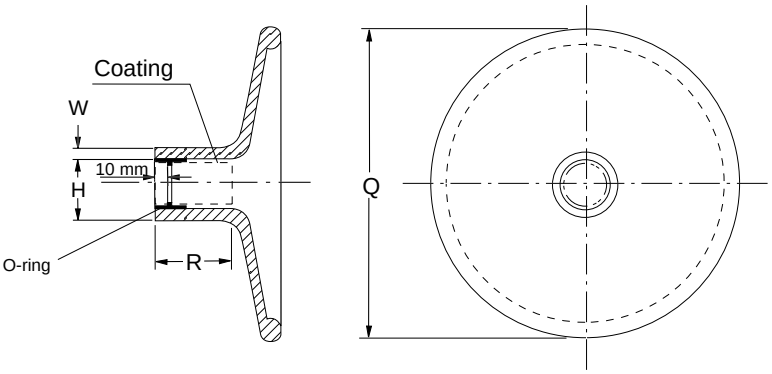

Standard Products/Dimensions

Part Number	H		Q	R	W	
	min	max	± 5 %	± 5 %	± 20 %	
	a	b	b	b	b	Color
205W314-103/89	28	13	76	20	2	red
205W320-103/89	35	16	85	20	2,4	red
205W325-103/89	45	20	95	22	1,7	red
205W336-103/89	50	24	115	27,5	2,5	red
205W346-103/89	75	30	135	32	2,5	red
205W350-103/89	75	35	165	53	2,8	red
205W355-103/89	90	40	195	54	3,5	red
205W357-103-R01/89	100	51	203	64	3,2	red
205W357-104/89	100	51	203	64	3,2	grey
205W359-103/89	120	67	230	65	3,3	red
205W359-104/89	120	67	230	65	3,3	grey

Notes
1. Dimensions in mm. a = as supplied, b = after free recovery
2. Coating location approx. as shown in the drawing.
3. Material -103 meets requirements of PPS 3011/18.
   Material -104 meets requirements of PPS 3011/18.
   Sealant /89 meets requirements of PPS 3012/3.

Printing: Raychem - Product Description - Batch Number.
Packaging: Standard - packed in a polybag.
Labelling: Quantity, description and batch number