DEIF

-power in control

CE

DATA SHEET



Voltmeters and ammeters with built-in switch,

types EQ96-sw4, EQ96-sw7, VDQ96-sw

- By activation of switch on the front measurement of:
  - phase to phase voltage (EQ96-sw4)
  - phase to phase voltage or phase to zero voltage (EQ96-sw7)
  - current in a 3-phase network (VDQ96-sw)
- DIN size Q96
- Accuracy: Class 1.5
- Exchangeable scale
- OFF position on switch

DEIF A/S · Frisenborgvej 33 · DK-7800 Skive
Tel.: +45 9614 9614 · Fax: +45 9614 9615
info@deif.com · www.deif.com

Document no.: 4921210077J

Application

The voltmeters type EQ96-sw4/sw7 and ammeters type VDQ96-sw are designed for use in e.g. power stations, distribution substations and transformer stations. In addition to normal measurement of AC voltages and currents respectively, both types are on the front provided with a switch, which can be set to measurement of:

EQ96-sw4 3-phase: L1 - L2, L2 - L3, L3 - L1, OFF

EQ96-sw7 3-phase/4-wire: L1 - L2, L2 - L3, L3 - L1, L1 - 0 (N), L2 - 0 (N), L3 - 0 (N), OFF
3-phase/3-wire: L1 - L2, L2 - L3, L3 - L1, OFF
Note: Error > 1.5% if phase voltages differ more than 10%

VDQ96-sw Phase currents (L1 - L2 - L3) in 3-phase networks
Note: When the switch is in position "0", the internal circuits are short-circuited

Technical specifications

	Voltmeter type EQ96-sw4/sw7	**Ammeter type VDQ96-sw**
Accuracy	Class 1.5 (-10...15...30...55°C) EN/IEC 60051	
Scale	Exchangeable for -/120 and -/132 V Measuring range according to the used voltage transformer	Exchangeable Measuring range according to the used current transformer
Measuring range	300 V, 500 V, 600 V, 800 V* -/120 V (100 V + 20%), -/132 V (110 V + 20%)	0...1 A, 0...5 A or from current transformer(s) Max. 515 V derived from voltages with max. 300 V to earth (300 V – Cat. III / 600 V Cat. II)
Burden	1 kΩ/V	-/1 A: Approx. 0.1 VA. -/5 A: Approx. 0.15 VA
Frequency	40...60 Hz	45...65 Hz
Temperature	-10...55°C (nominal), -25...60°C (operating), -25...65°C (storage)	
Test voltage	2 kV - (50 Hz - 1 min.)	
EMC	IEC/EN 6100-6-1/2/3/4 CE-marked for residential, commercial and light industry plus industrial environment	
Materials	Self-extinguishing plastic, to UL94 (V0)	
Protection	IP52, EN/IEC 60525	
Mounting	Vertical flush mounting	

*800 V: only EQ96-sw7. Up to 600 V: Cat III. Above 600 V: only Cat II.

Connections

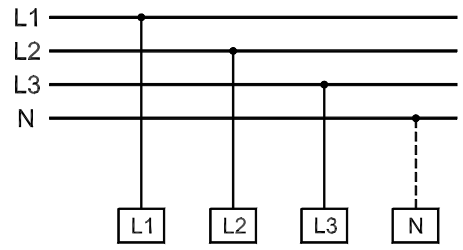

EQ96-sw4/sw7

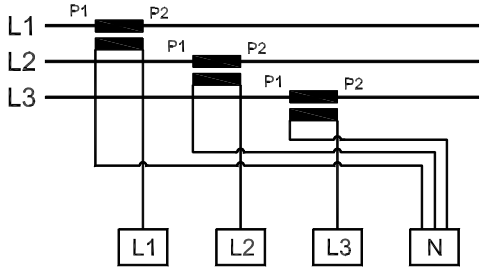

VDQ96-sw

Dimensions

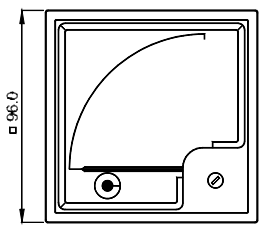

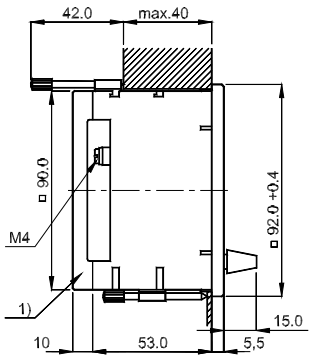

1) Protective cover

EQ96-sw4/sw7, VDQ96-sw Weight: Approx. 0.250 kg

Available variants

Item no.	Variant no.	Variant description
2961111160	01	EQ96-sw4 Standard measuring input and standard scale
2961111160	02	EQ96-sw4 For V/T or non-standard measuring input
2961111120	01	EQ96-sw7 Standard measuring input and standard scale
2961111120	02	EQ96-sw7 For V/T or non-standard measuring input
2961661120	01	VDQ96-sw /1 A or /5 A incl. standard scale

Order specifications

Variants:

Mandatory information						**Additional options to the standard variant**	
Item no.	**Type**	**Variant no.**	**Measuring range**	**Scale**	**Trafo: Primary/secondary**	**Option**	**Option**

Example:

Mandatory information						**Additional options to the standard variant**	
Item no.	**Type**	**Variant no.**	**Measuring range**	**Scale**	**Trafo: Primary/secondary**	**Option**	**Option**
2961111160-01	EQ96-sw4	01	0…500V AC	0…500V AC	500/1 A	Anti glare glass	
2961111120-02	EQ96-sw7	02	Determined by DEIF	0…12 kV	11 kV/120V AC	Red line at 10.8 kV	Anti glare glass
2961661120-01	VDQ96-sw	01	0…300 A	0…300 A	500/1 A		

Note: When ordering an EQ96 meter for connection via a voltage transformer (VT), both primary and secondary of the VT must be stated as shown above.

Due to our continuous development we reserve the right to supply equipment which may vary from the described.

DEIF A/S, *Frisenborgvej 33*
DK-7800 Skive, Denmark

Tel.: +45 9614 9614, Fax: +45 9614 9615
E-mail: deif@deif.com, URL: www.deif.com