zencontrol

Mounting kits **datasheet**



zc-pir-rs-kit zc-pir-sm-kit zc-pir-cd-kit

Product range

Order code	Description
zc-pir-rs-kit	PIR sensor recessed mount kit
zc-pir-rs-kit-bl	PIR sensor recessed mount kit, black
zc-pir-cd-kit	PIR sensor conduit mount kit
zc-pir-cd-kit-bl	PIR sensor conduit mount kit, black
zc-pir-sm-kit	PIR sensor surface mount kit
zc-pir-sm-kit-bl	PIR sensor surface mount kit, black

Supported models

Order code	Description
zc-pir-5m	DALI PIR sensor 5 m
zc-pir-8m	DALI PIR sensor 8 m
zc-pir-5m-p	5 m, PIR and lux sensor expansion kit for zc-smart-driver
zc-pir-8m-p	8 m, PIR and lux sensor, with IR expansion kit for zc-smart-driver
zc-smart-spot	1 W, Emergency non-maintained spot expansion kit for zc-smart-driver-em
zc-em-kit	1500 mAh, Emergency expansion kit for zc-smart-driver-em
zc-em-kit-30	3000 mAh, Emergency expansion kit for zc-smart-driver-em

Dimensions (mm)

Type	
Recessed mount	Cut-out Ø 44 - 45 mm
Counduit mount	Fitting centres 50 mm, junction box not included
Surface mount	Fitting centres 42.5 mm

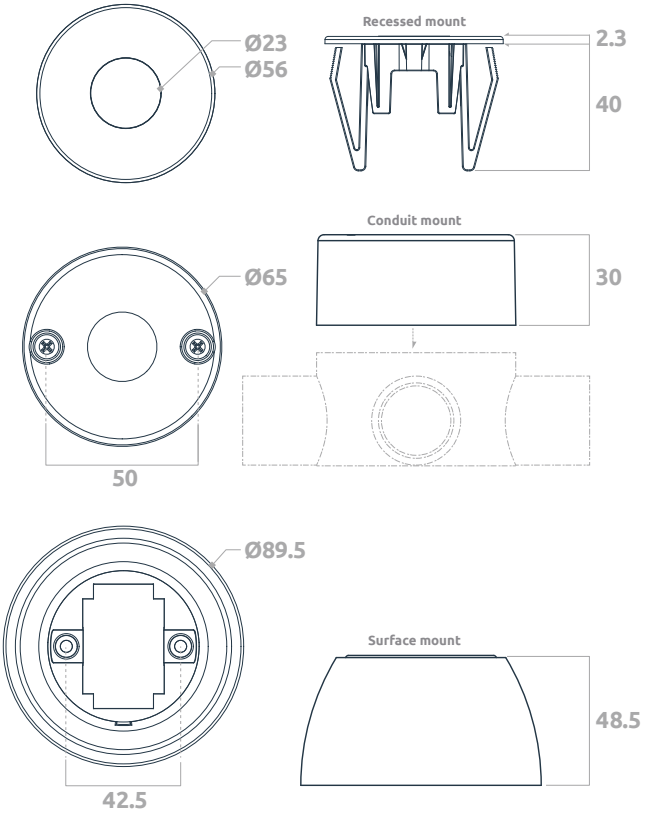

V1.2
Last updated 06 / 08 / 19

Information is subject to change without notice, E&OE

© zencontrol