

PowerXL DG1 variable frequency drives General Purpose Drive

PowerXL DG1 general-purpose drives are variable frequency drives in Eaton's "Next-Generation PowerXL" series. They are specifically designed for modern, sophisticated applications.

In fact, energy-saving algorithms, high short-circuit values, and a heavy-duty design all enable them to provide maximum efficiency, safety, and reliability.

Performance range:

- 0.75 - 90 kW (U_e: 3~ 230 V, U_2: 3~ 230 V)
- 0.75 - 630 kW (U_e: 3~ 400 V, U_2: 3~ 400 V)
- 2.2 - 800 HP (U_e: 3~ 575 V, U_2: 3~ 575 V)

Applications:

- Multi-pump applications
- HVAC
- Roller and chain conveyors
- Compressors, mills
- Production machines
- Centrifuges and extruders
- Traction drives, conveyor belts
- Sawing, drilling, dosing unit drives
- Chemical and primary industries
- Water jet cutting, crushers

Features:

- Ease of use: Startup Wizard, inControl PC Tool software, four built-in applications, diagnostics, local/remote button, removable keypad with copy/paste functionality.
- Communicative: Modbus RTU, Modbus TCP, Ethernet/IP and BacNet MS/TP Standard on each device. In addition, extensive I/O above the average for this device class.
- Efficiency: Active energy control algorithm, 5% DC choke, input surge protection, EMC filter built-in
- Rugged and reliable: Dual rating with high (CT) and low (VT) overload capability, conformal coated boards, brake chopper circuit.
- Durable metal power section, 50 °C rating (60 °C de-rating)
- Removable keypad rated IP54
- Global acceptance: UL, CE, cUL, RoHS, RCM

Accessory:

- Communication modules (PROFIBUS, PROFINET, CANopen, etc.)
- I/O expansions
- External keypad
- Motor chokes
- Sine filter
- Braking resistances
- Power Xpert inControl operating software
- DG1-remote keypad

For more information, visit:
Eaton.com/dg1



2.6 DG1 variable frequency drives up to 630 kW

System overview 198
Key to type references 199
Ordering 200
DG1 for three-phase motors 230 V, three-phase 200
DG1 for three-phase motors 400 V, three-phase 202
DG1 for three-phase motors 575 V, three-phase 205
Accessories 208
Engineering 212
Assigned swithcing and protective elements for DG1 212
Connection examples 223
Technical specifications 224

System overview



DG1

DG1-… 1
→ Page 200

Mounting frame DXG-ACC-FR… 2
→ Page 210

EMV filter DX-EMC… 3
→ Page 256

Braking resistances DX-BR… 4
→ Page 261

Mains chokes DX-LN… 5
Motor chokes DX-LM…
Harmonic filters DX-PHF…
Sine filters DX-SIN…
→ Page 254
→ Page 258
→ Page 255
→ Page 259

Expansions and communication cards DXG-EXT-… DXG-NET-… 6
→ Page 208

External keypad DXG-KEY-… 7
→ Page 210

Key to type references

DG 1 - 3 4 4D3 F B - C 20 C

Device series
DG = General Purpose Drive

Product generation
1 = First generation

Stages
1 = 1~ input / 3~ output
3 = 3~ input / 3+ output

Input/Output voltages
1 = 115 V (100 - 120 V +10%/-15%)
2 = 230 V (200 - 240 V +10%/-15%)
4 = 400 V (380 - 500 V +10%/-15%)
5 = 575 V (525 - 600 V +10%/-15%)

Sizes
FR0
FR1
FR2
FR3
FR4
FR5
FR6

3~, 200 - 240 V
3D7 = 3.7 A, 0.75 / 1.1 kW, 0.75 / 1 HP
4D8 = 4.8 A, 1.1 / 1.5 kW, 1 / 1.5 HP
6D6 = 6.6 A, 1.5 / 1.5 kW, 1.5 / 2 HP
7D8 = 7.8 A, 1.5 / 2.2 kW, 2 / 3 HP
011 = 11 A, 2.2 / 3 kW, 3 / 3 HP
012 = 12.5 A, 3 / 4 kW, 3 / 5 HP
017 = 17.5 A, 4 / 5.5 kW, 5 / 7.5 HP
025 = 25 A, 5.5 / 7.5 kW, 7.5 / 10 HP
031 = 31 A, 7.5 / 11 kW, 10 / 15 HP
048 = 48 A, 11 / 15 kW, 15 / 20 HP
061 = 61 A, 15 / 22 kW, 20 / 25 HP
075 = 75 A, 22 / 22 kW, 25 / 30 HP
088 = 88 A, 22 / 30 kW, 30 / 40 HP
114 = 114 A, 30 / 45 kW, 40 / 50 HP
143 = 143 A, 45 / 45 kW, 50 / 60 HP
170 = 170 A, 45 / 55 kW, 60 / 75 HP
211 = 211 A, 55 / 75 kW, 75 / 100 HP
248 = 248 A, 75 / 90 kW, 100 / 125 HP

3~, 380 - 480 V
2D2 = 2.2 A, 0.75 / 1.1 kW, 1 / 1.5 HP
3D3 = 3.3 A, 1.1 / 1.5 kW, 1.5 / 2 HP
4D3 = 4.3 A, 1.5 / 2.2 kW, 2 / 3 HP
5D6 = 5.6 A, 2.2 / 3 kW, 3 / 5 HP
7D6 = 7.6 A, 3 / 4 kW, 5 / 5 HP
9D0 = 9 A, 4 / 5.5 kW, 5 / 7.5 HP
012 = 12 A, 5.5 / 7.5 kW, 7.5 / 10 HP
016 = 16 A, 7.5 / 11 kW, 10 / 15 HP
023 = 23 A, 11 / 15 kW, 15 / 20 HP
031 = 31 A, 15 / 18.5 kW, 20 / 25 HP
038 = 38 A, 18.5 / 22 kW, 25 / 30 HP
046 = 46 A, 22 / 30 kW, 30 / 40 HP
061 = 61 A, 30 / 37 kW, 40 / 50 HP
072 = 72 A, 37 / 45 kW, 50 / 60 HP
087 = 87 A, 45 / 55 kW, 60 / 75 HP
105 = 105 A, 55 / 75 kW, 75 / 100 HP
140 = 140 A, 75 / 90 kW, 100 / 125 HP
170 = 170 A, 90 / 110 kW, 125 / 150 HP
205 = 205 A, 110 / 132 kW, 150 / 200 HP
245 = 245 A, 132 / 160 kW, 200 / 250 HP

3~, 525 - 600 V
3D3 = 3.3 A, 1.5 / 2.2 kW, 2 / 3 HP
4D5 = 4.5 A, 2.2 / 4 kW, 3 / 5 HP
7D5 = 7.5 A, 4 / 5.5 kW, 5 / 7.5 HP
010 = 10 A, 5.5 / 7.5 kW, 7.5 / 10 HP
013 = 13.5 A, 7.5 / 11 kW, 10 / 15 HP
018 = 18 A, 11 / 15 kW, 15 / 20 HP
022 = 22 A, 15 / 18.5 kW, 20 / 25 HP
027 = 27 A, 18.5 / 22 kW, 25 / 30 HP
034 = 34 A, 22 / 30 kW, 30 / 40 HP
041 = 41 A, 30 / 37 kW, 40 / 50 HP
052 = 52 A, 37 / 45 kW, 50 / 60 HP
062 = 62 A, 45 / 55 kW, 60 / 75 HP
080 = 80 A, 55 / 75 kW, 75 / 100 HP
100 = 100 A, 75 / 90 kW, 100 / 125 HP
125 = 125 A, 90 / 110 kW, 125 / 150 HP
144 = 144 A, 110 / 160 kW, 150 / 200 HP
208 = 208 A, 160 / 200 kW, 200 / 250 HP

Control options
S = STO with SIL2, Ethernet/IP, Modbus TCP on-board, optional card connection (DM1 Pro)
C = Coated PCBs (3C2, 3S2)

Protection type
20 = IP20

Display options
N = No display
S = Multi-segment LCD display (DM1 Pro)
C = Full text LCD display (DG1)

Internal brake chopper
N = No brake chopper
B = Internal brake chopper

Internal EMC filter
F = Internal EMC filter & DC link choke
D = Internal DC link choke, no EMC filter
E = Internal EMC filter

2.6 DG1 variable frequency drives up to 630 kW

DG1 for three-phase motors 230 V, three-phase supply

Ordering

Rated operational current[1]	Assigned motor output [1) 2) 3)]		Rated operational current[1]	Assigned motor output [1) 2) 3)]		Configuration			Frame size	Protection type	Model code Catalog number	Std. pack
I_n = 150% I_e			I_n = 110% I_e			Radio interference suppression filter	Brake chopper	DC choke				
A	kW	HP	A	kW	HP							
U_e 230 V AC, three-phase / U_2 230 V AC, three-phase, with BU, IP20												
Mains voltage (50/60Hz) U_{LN}: 200 (-15%) - 240 (+10%) V												
3.7	0.75	0.75	4.8	1.1	1	✓	✓	–	FS0	IP20/NEMA0	**DG1-323D7EB-C20C** 9701-0200	1 unit
4.8	1.1	1	6.6	1.5	1.5	✓	✓	–			**DG1-324D8EB-C20C** 9701-0201	
6.6	1.5	1.5	7.8	1.5	2	✓	✓	–			**DG1-326D6EB-C20C** 9701-0202	
U_e 230 V AC, three-phase / U_2 230 V AC, three-phase, with BU, IP21												
Mains voltage (50/60Hz) U_{LN}: 200 (-15%) - 240 (+10%) V												
3.7	0.75	0.75	4.8	1.1	1	✓	✓	✓	FS1	IP21/NEMA1	**DG1-323D7FB-C21C** 9701-1002-00P	1 unit
4.8	1.1	1	6.6	1.5	1.5	✓	✓	✓			**DG1-324D8FB-C21C** 9701-1004-00P	
6.6	1.5	1.5	7.8	1.5	2	✓	✓	✓			**DG1-326D6FB-C21C** 9701-1006-00P	
7.8	1.5	2	11	2.2	3	✓	✓	✓			**DG1-327D8FB-C21C** 9701-1008-00P	
11	2.2	3	12.5	3	3	✓	✓	✓			**DG1-32011FB-C21C** 9701-1001-00P	
12.5	3	3	17.5	4	5	✓	✓	✓	FS2		**DG1-32012FB-C21C** 9701-2002-00P	
17.5	4	5	25	5.5	7.5	✓	✓	✓			**DG1-32017FB-C21C** 9701-2004-00P	
25	5.5	7.5	31	7.5	10	✓	✓	✓			**DG1-32025FB-C21C** 9701-2001-00P	
31	7.5	10	48	11	15	✓	✓	✓	FS3		**DG1-32031FB-C21C** 9701-3002-00P	
48	11	15	61	15	20	✓	✓	✓			**DG1-32048FB-C21C** 9701-3001-00P	
61	15	20	75	22	25	✓	✓	✓	FS4		**DG1-32061FB-C21C** 9701-4002-00P	
75	22	25	88	22	30	✓	✓	✓			**DG1-32075FB-C21C** 9701-4006-00P	
88	22	30	114	30	40	✓	✓	✓			**DG1-32088FB-C21C** 9701-4010-00P	
114	30	40	143	45	50	✓	✓	✓	FS5		**DG1-32114FB-C21C** 9701-5002-00P	
143	45	50	170	45	60	✓	✓	✓			**DG1-32143FB-C21C** 9701-5006-00P	
170	45	60	211	55	75	✓	✓	✓			**DG1-32170FB-C21C** 9701-5010-00P	
211	55	75	261	75	100	✓	✓	✓	FS6		**DG1-32211FB-C21C** 9701-6001-00P	
248	75	100	312	90	125	✓	✓	✓			**DG1-32248FB-C21C** 9701-6005-00P	
U_e 230 V AC, three-phase / U_2 230 V AC, three-phase, without BU, IP21												
Mains voltage (50/60Hz) U_{LN}: 200 (-15%) - 240 (+10%) V												
61	15	20	75	22	25	✓	–	✓	FS4	IP21/NEMA1	**DG1-32061FN-C21C** 9701-4004-00P	1 unit
75	22	25	88	22	30	✓	–	✓			**DG1-32075FN-C21C** 9701-4008-00P	
88	22	30	114	30	40	✓	–	✓			**DG1-32088FN-C21C** 9701-4001-00P	
114	30	40	143	45	50	✓	–	✓	FS5		**DG1-32114FN-C21C** 9701-5004-00P	
143	45	50	170	45	60	✓	–	✓			**DG1-32143FN-C21C** 9701-5008-00P	
170	45	60	211	55	75	✓	–	✓			**DG1-32170FN-C21C** 9701-5001-00P	
211	55	75	261	75	100	✓	–	✓	FS6		**DG1-32211FN-C21C** 9701-6003-00P	
248	75	100	312	90	125	✓	–	✓			**DG1-32248FN-C21C** 9701-6007-00P	

Notes

[1] Overload cycle for 60 s every 600 s, 150% at 50 °C ambient temperature, 110% at 40 °C ambient temperature
[2] For normal internally and externally ventilated four-pole three-phase asynchronous motors with 1500 rpm at 50 Hz and 1800 rpm at 60 Hz
[3] At 400 V, 50 Hz/at 480 V, 60 Hz

Rated operational current[1]	Assigned motor output [1) 2) 3)]		Rated operational current[1]	Assigned motor output [1) 2) 3)]		Configuration			Frame size	Protection type	**Model code** Catalog number	Std. pack
I_n = 150% I_e			I_n = 110% I_e			Radio interference suppression filter	Brake chopper	DC choke				
A	kW	HP	A	kW	HP							
U_e 230 V AC, three-phase / U_2 230 V AC, three-phase, with BU, IP54												
Mains voltage (50/60Hz) U_{LN}: 200 (-15%) - 240 (+10%) V												
3.7	0.75	0.75	4.8	1.1	1	✓	✓	✓	FS1	IP54/NEMA12	**DG1-323D7FB-C54C** 9701-1101-00P	1 unit
4.8	1.1	1	6.6	1.5	1.5	✓	✓	✓			**DG1-324D8FB-C54C** 9701-1103-00P	
6.6	1.5	1.5	7.8	1.5	2	✓	✓	✓			**DG1-326D6FB-C54C** 9701-1105-00P	
7.8	1.5	2	11	2.2	3	✓	✓	✓			**DG1-327D8FB-C54C** 9701-1107-00P	
11	2.2	3	12.5	3	3	✓	✓	✓			**DG1-32011FB-C54C** 9701-1109-00P	
12.5	3	3	17.5	4	5	✓	✓	✓	FS2		**DG1-32012FB-C54C** 9701-2101-00P	
17.5	4	5	25	5.5	7.5	✓	✓	✓			**DG1-32017FB-C54C** 9701-2103-00P	
25	5.5	7.5	31	7.5	10	✓	✓	✓			**DG1-32025FB-C54C** 9701-2105-00P	
31	7.5	10	48	11	15	✓	✓	✓	FS3		**DG1-32031FB-C54C** 9701-3101-00P	
48	11	15	61	15	20	✓	✓	✓			**DG1-32048FB-C54C** 9701-3103-00P	
61	15	20	75	22	25	✓	✓	✓	FS4		**DG1-32061FB-C54C** 9701-4101-00P	
75	22	25	88	22	30	✓	✓	✓			**DG1-32075FB-C54C** 9701-4105-00P	
88	22	30	114	30	40	✓	✓	✓			**DG1-32088FB-C54C** 9701-4109-00P	
114	30	40	143	45	50	✓	✓	✓	FS5		**DG1-32114FB-C54C** 9701-5101-00P	
143	45	50	170	45	60	✓	✓	✓			**DG1-32143FB-C54C** 9701-5105-00P	
170	45	60	211	55	75	✓	✓	✓			**DG1-32170FB-C54C** 9701-5109-00P	
211	55	75	261	75	100	✓	✓	✓	FS6		**DG1-32211FB-C54C** 9701-6101-00P	
248	75	100	312	90	125	✓	✓	✓			**DG1-32248FB-C54C** 9701-6105-00P	
U_e 230 V AC, three-phase / U_2 230 V AC, three-phase, without BU, IP54												
Mains voltage (50/60Hz) U_{LN}: 200 (-15%) - 240 (+10%) V												
61	15	20	75	22	25	✓	–	✓	FS4	IP54/NEMA12	**DG1-32061FN-C54C** 9701-4103-00P	1 unit
75	22	25	88	22	30	✓	–	✓			**DG1-32075FN-C54C** 9701-4107-00P	
88	22	30	114	30	40	✓	–	✓			**DG1-32088FN-C54C** 9701-4111-00P	
114	30	40	143	45	50	✓	–	✓	FS5		**DG1-32114FN-C54C** 9701-5103-00P	
143	45	50	170	45	60	✓	–	✓			**DG1-32143FN-C54C** 9701-5107-00P	
170	45	60	211	55	75	✓	–	✓			**DG1-32170FN-C54C** 9701-5111-00P	
211	55	75	261	75	100	✓	–	✓	FS6		**DG1-32211FN-C54C** 9701-6103-00P	
248	75	100	312	90	125	✓	–	✓			**DG1-32248FN-C54C** 9701-6107-00P	

Notes

[1)] Overload cycle for 60 s every 600 s, 150% at 50 °C ambient temperature, 110% at 40 °C ambient temperature
[2)] For normal internally and externally ventilated four-pole three-phase asynchronous motors with 1500 rpm at 50 Hz and 1800 rpm at 60 Hz
[3)] At 400 V, 50 Hz/at 480 V, 60 Hz

2.6 DG1 variable frequency drives up to 630 kW

DG1 for three-phase motors 400 V, three-phase supply

Rated operational current[1]	Assigned motor output [1) 2) 3)]		Rated operational current[1]	Assigned motor output [1) 2) 3)]		Configuration			Frame size	Protection type	**Model code** Catalog number	Std. pack
I_n = 150% I_e			I_n = 110% I_e			Radio interference suppression filter	Brake chopper	DC choke				
A	kW	HP	A	kW	HP							
U_e 400 V AC, three-phase / U_2 400 V AC, three-phase, with BU, IP20												
Mains voltage (50/60Hz) U_{LN}: 380 (-15%) - 500 (+10%) V												
2.2	0.75	1	3.3	1.1	1.5	✓	✓	–	FS0	IP20/NEMA0	**DG1-342D2EB-C20C** 9702-0200	1 unit
3.3	1.1	1.5	4.3	1.5	2	✓	✓	–			**DG1-343D3EB-C20C** 9702-0201	
4.3	1.5	2	5.6	2.2	3	✓	✓	–			**DG1-344D3EB-C20C** 9702-0202	
5.6	2.2	3	7.6	3	5	✓	✓	–			**DG1-345D6EB-C20C** 9702-0203	
U_e 400 V AC, three-phase / U_2 400 V AC, three-phase, with BU, IP21												
Mains voltage (50/60Hz) U_{LN}: 380 (-15%) - 500 (+10%) V												
2.2	0.75	1	3.3	1.1	1.5	✓	✓	✓	FS1	IP21/NEMA1	**DG1-342D2FB-C21C** 9702-1002-00P	1 unit
3.3	1.1	1.5	4.3	1.5	2	✓	✓	✓			**DG1-343D3FB-C21C** 9702-1004-00P	
4.3	1.5	2	5.6	2.2	3	✓	✓	✓			**DG1-344D3FB-C21C** 9702-1006-00P	
5.6	2.2	3	7.6	3	5	✓	✓	✓			**DG1-345D6FB-C21C** 9702-1008-00P	
7.6	3	5	9	4	5	✓	✓	✓			**DG1-347D6FB-C21C** 9702-1001-00P	
9	4	5	12	5.5	7.5	✓	✓	✓			**DG1-349D0FB-C21C** 9702-1011-00P	
12	5.5	7.5	16	7.5	10	✓	✓	✓	FS2		**DG1-34012FB-C21C** 9702-2002-00P	
16	7.5	10	23	11	15	✓	✓	✓			**DG1-34016FB-C21C** 9702-2004-00P	
23	11	15	31	15	20	✓	✓	✓			**DG1-34023FB-C21C** 9702-2001-00P	
31	15	20	38	18.5	25	✓	✓	✓	FS3		**DG1-34031FB-C21C** 9702-3002-00P	
38	18.5	25	46	22	30	✓	✓	✓			**DG1-34038FB-C21C** 9702-3004-00P	
46	22	30	61	30	40	✓	✓	✓			**DG1-34046FB-C21C** 9702-3001-00P	
61	30	40	72	37	50	✓	✓	✓	FS4		**DG1-34061FB-C21C** 9702-4002-00P	
72	37	50	87	45	60	✓	✓	✓			**DG1-34072FB-C21C** 9702-4006-00P	
87	45	60	105	55	75	✓	✓	✓			**DG1-34087FB-C21C** 9702-4010-00P	
105	55	75	140	75	100	✓	✓	✓	FS5		**DG1-34105FB-C21C** 9702-5002-00P	
140	75	100	170	90	125	✓	✓	✓			**DG1-34140FB-C21C** 9702-5006-00P	
170	90	125	205	110	150	✓	✓	✓			**DG1-34170FB-C21C** 9702-5010-00P	
205	110	150	261	132	200	✓	✓	✓	FS6		**DG1-34205FB-C21C** 9702-6001-00P	
245	132	200	310	160	250	✓	✓	✓			**DG1-34245FB-C21C** 9702-6005-00P	

Notes

[1)] Overload cycle for 60 s every 600 s, 150% at 50 °C ambient temperature, 110% at 40 °C ambient temperature
[2)] For normal internally and externally ventilated four-pole three-phase asynchronous motors with 1500 rpm at 50 Hz and 1800 rpm at 60 Hz
[3)] At 400 V, 50 Hz/at 480 V, 60 Hz

Rated operational current[1]	Assigned motor output [1) 2) 3)]		Rated operational current[1]	Assigned motor output [1) 2) 3)]		Configuration			Frame size	Protection type	**Model code** Catalog number	Std. pack
I_n = 150% I_e			I_n = 110% I_e			Radio interference suppression filter	Brake chopper	DC choke				
A	kW	HP	A	kW	HP							
U_e 400 V AC, three-phase / U_2 400 V AC, three-phase, with BU, IP00												
Mains voltage (50/60Hz) U_{LN}: 380 (-15%) - 500 (+10%) V												
310	160	250	385	200	300	✓	✓	✓	FS7	IP00	**DG1-34310FB-C00C** 3-4917-102A	
385	200	300	460	250	350	✓	✓	✓			**DG1-34385FB-C00C** 3-4917-104A	
460	250	350	520	250	450	✓	✓	✓			**DG1-34460FB-C00C** 3-4917-106A	
520	250	450	590	315	500	✓	✓	✓			**DG1-34520FB-C00C** 3-4917-108A	
590	315	500	650	355	500	✓	✓	✓	FS8		**DG1-34590FB-C00C** 3-4918-102A	
650	355	500	730	400	600	✓	✓	✓			**DG1-34650FB-C00C** 3-4918-104A	
730	400	600	820	450	600	✓	✓	✓			**DG1-34730FB-C00C** 3-4918-106A	
820	450	600	920	500	750	✓	✓	✓			**DG1-34820FB-C00C** 3-4918-108A	
920	500	750	1010	560	750	✓	✓	✓			**DG1-34920FB-C00C** 3-4918-110A	
920	500	750	1180	630	850	✓	✓	✓			**DG1-341K0FB-C00C** 3-4918-112A	
U_e 400 V AC, three-phase / U_2 400 V AC, three-phase, without BU, IP21												
Supply voltage (50/60Hz) U_{LN}: 380 (-15%) - 500 (+10%) V												
61	30	40	72	37	50	✓	–	✓	FS4	IP21/NEMA1	**DG1-34061FN-C21C** 9702-4004-00P	1 unit
72	37	50	87	45	60	✓	–	✓			**DG1-34072FN-C21C** 9702-4008-00P	
87	45	60	105	55	75	✓	–	✓			**DG1-34087FN-C21C** 9702-4001-00P	
105	55	75	140	75	100	✓	–	✓	FS5		**DG1-34105FN-C21C** 9702-5004-00P	
140	75	100	170	90	125	✓	–	✓			**DG1-34140FN-C21C** 9702-5008-00P	
170	90	125	205	110	150	✓	–	✓			**DG1-34170FN-C21C** 9702-5001-00P	
205	110	150	261	132	200	✓	–	✓	FS6		**DG1-34205FN-C21C** 9702-6003-00P	
245	132	200	310	160	250	✓	–	✓			**DG1-34245FN-C21C** 9702-6007-00P	

Notes [1)] Overload cycle for 60 s every 600 s, 150% at 50 °C ambient temperature, 110% at 40 °C ambient temperature
[2)] For normal internally and externally ventilated four-pole three-phase asynchronous motors with 1500 rpm at 50 Hz and 1800 rpm at 60 Hz [3)] At 400 V, 50 Hz/at 480 V, 60 Hz

U_e 400 V AC, three-phase / U_2 400 V AC, three-phase, without BU, IP00												
Supply voltage (50/60Hz) U_{LN}: 380 (-15%) - 500 (+10%) V												
310	160	250	385	200	300	✓	✓	✓	FS7	IP00	**DG1-34310FN-C00C** 3-4917-101A	1 unit
385	200	300	460	250	350	✓	✓	✓			**DG1-34385FN-C00C** 3-4917-103A	
460	250	350	520	250	450	✓	✓	✓			**DG1-34460FN-C00C** 3-4917-105A	
520	250	450	590	315	500	✓	✓	✓			**DG1-34520FN-C00C** 3-4917-107A	
590	315	500	650	355	500	✓	✓	✓	FS8		**DG1-34590FN-C00C** 3-4918-101A	
650	355	500	730	400	600	✓	✓	✓			**DG1-34650FN-C00C** 3-4918-103A	
730	400	600	820	450	600	✓	✓	✓			**DG1-34730FN-C00C** 3-4918-105A	
820	450	600	920	500	750	✓	✓	✓			**DG1-34820FN-C00C** 3-4918-107A	
920	500	750	1010	560	750	✓	✓	✓			**DG1-34920FN-C00C** 3-4918-109A	
920	500	750	1180	630	850	✓	✓	✓			**DG1-341K0FN-C00C** 3-4918-111A	

2.6 DG1 variable frequency drives up to 630 kW

DG1 for three-phase motors 400 V, three-phase supply

Rated operational current[1]	Assigned motor output [1) 2) 3)]		Rated operational current[1]	Assigned motor output [1) 2) 3)]		Configuration			Frame size	Protection type	**Model code** Catalog number	Std. pack
I_n = 150% I_e			I_n = 110% I_e			Radio interference suppression filter	Brake chopper	DC choke				
A	kW	HP	A	kW	HP							
U_e 400 V AC, three-phase / U_2 400 V AC, three-phase, with BU, IP54												
Mains voltage (50/60Hz) U_{LN}: 380 (-15%) - 500 (+10%) V												
2.2	0.75	1	3.3	1.1	1.5	✓	✓	✓	FS1	IP54/NEMA12	**DG1-342D2FB-C54C** 9702-1101-00P	1 unit
3.3	1.1	1.5	4.3	1.5	2	✓	✓	✓			**DG1-343D3FB-C54C** 9702-1103-00P	
4.3	1.5	2	5.6	2.2	3	✓	✓	✓			**DG1-344D3FB-C54C** 9702-1105-00P	
5.6	2.2	3	7.6	3	5	✓	✓	✓			**DG1-345D6FB-C54C** 9702-1107-00P	
7.6	3	5	9	4	5	✓	✓	✓			**DG1-347D6FB-C54C** 9702-1109-00P	
9	4	5	12	5.5	7.5	✓	✓	✓			**DG1-349D0FB-C54C** 9702-1111-00P	
12	5.5	7.5	16	7.5	10	✓	✓	✓	FS2		**DG1-34012FB-C54C** 9702-2101-00P	
16	7.5	10	23	11	15	✓	✓	✓			**DG1-34016FB-C54C** 9702-2103-00P	
23	11	15	31	15	20	✓	✓	✓			**DG1-34023FB-C54C** 9702-2105-00P	
31	15	20	38	18.5	25	✓	✓	✓	FS3		**DG1-34031FB-C54C** 9702-3101-00P	
38	18.5	25	46	22	30	✓	✓	✓			**DG1-34038FB-C54C** 9702-3103-00P	
46	22	30	61	30	40	✓	✓	✓			**DG1-34046FB-C54C** 9702-3105-00P	
61	30	40	72	37	50	✓	✓	✓	FS4		**DG1-34061FB-C54C** 9702-4101-00P	
72	37	50	87	45	60	✓	✓	✓			**DG1-34072FB-C54C** 9702-4105-00P	
87	45	60	105	55	75	✓	✓	✓			**DG1-34087FB-C54C** 9702-4109-00P	
105	55	75	140	75	100	✓	✓	✓	FS5		**DG1-34105FB-C54C** 9702-5101-00P	
140	75	100	170	90	125	✓	✓	✓			**DG1-34140FB-C54C** 9702-5105-00P	
170	90	125	205	110	150	✓	✓	✓			**DG1-34170FB-C54C** 9702-5109-00P	
205	110	150	261	132	200	✓	✓	✓	FS6		**DG1-34205FB-C54C** 9702-6101-00P	
245	132	200	310	160	250	✓	✓	✓			**DG1-34245FB-C54C** 9702-6105-00P	
U_e 400 V AC, three-phase / U_2 400 V AC, three-phase, without BU, IP54												
Mains voltage (50/60Hz) U_{LN}: 380 (-15%) - 500 (+10%) V												
61	30	40	72	37	50	✓	–	✓	FS4	IP54/NEMA12	**DG1-34061FN-C54C** 9702-4103-00P	1 unit
72	37	50	87	45	60	✓	–	✓			**DG1-34072FN-C54C** 9702-4107-00P	
87	45	60	105	55	75	✓	–	✓			**DG1-34087FN-C54C** 9702-4111-00P	
105	55	75	140	75	100	✓	–	✓	FS5		**DG1-34105FN-C54C** 9702-5103-00P	
140	75	100	170	90	125	✓	–	✓			**DG1-34140FN-C54C** 9702-5107-00P	
170	90	125	205	110	150	✓	–	✓			**DG1-34170FN-C54C** 9702-5111-00P	
205	110	150	261	132	200	✓	–	✓	FS6		**DG1-34205FN-C54C** 9702-6103-00P	
245	132	200	310	160	250	✓	–	✓			**DG1-34245FN-C54C** 9702-6107-00P	

Notes

[1)] Overload cycle for 60 s every 600 s, 150% at 50 °C ambient temperature, 110% at 40 °C ambient temperature
[2)] For normal internally and externally ventilated four-pole three-phase asynchronous motors with 1500 rpm at 50 Hz and 1800 rpm at 60 Hz
[3)] At 400 V, 50 Hz/at 480 V, 60 Hz

Rated operational current[1]	Assigned motor output [1) 2) 3)]		Rated operational current[1]	Assigned motor output [1) 2) 3)]		Configuration			Frame size	Protection type	**Model code** Catalog number	Std. pack
I_n = 150% I_e			I_n = 110% I_e			Radio interference suppression filter	Brake chopper	DC choke				
A	kW	HP	A	kW	HP							
U_e 575 V AC, three-phase / U_2 575 V AC, three-phase, with BU, IP21												
Mains voltage (50/60Hz) U_{LN}: 380 (-15%) - 500 (+10%) V												
3.3	1.5	2	4.5	2.2	3	✓	✓	✓	FS1	IP21/NEMA1	**DG1-353D3FB-C21C** 9703-1002-00P	1 unit
4.5	2.2	3	7.5	4	5	✓	✓	✓			**DG1-354D5FB-C21C** 9703-1004-00P	
7.5	4	5	10	5.5	7.5	✓	✓	✓			**DG1-357D5FB-C21C** 9703-1006-00P	
10	5.5	7.5	13.5	7.5	10	✓	✓	✓	FS2		**DG1-35010FB-C21C** 9703-2002-00P	
13.5	7.5	10	18	11	15	✓	✓	✓			**DG1-35013FB-C21C** 9703-2004-00P	
18	11	15	22	15	20	✓	✓	✓			**DG1-35018FB-C21C** 9703-2006-00P	
22	15	20	27	18.5	25	✓	✓	✓	FS3		**DG1-35022FB-C21C** 9703-3002-00P	
27	18.5	25	34	22	30	✓	✓	✓			**DG1-35027FB-C21C** 9703-3004-00P	
34	22	30	41	30	40	✓	✓	✓			**DG1-35034FB-C21C** 9703-3006-00P	
41	30	40	52	37	50	✓	✓	✓	FS4		**DG1-35041FB-C21C** 9703-4002-00P	
52	37	50	62	45	60	✓	✓	✓			**DG1-35052FB-C21C** 9703-4006-00P	
62	45	60	80	55	75	✓	✓	✓			**DG1-35062FB-C21C** 9703-4010-00P	
80	55	75	100	75	100	✓	✓	✓	FS5		**DG1-35080FB-C21C** 9703-5002-00P	
100	75	100	125	90	125	✓	✓	✓			**DG1-35100FB-C21C** 9703-5006-00P	
125	90	125	144	110	150	✓	✓	✓			**DG1-35125FB-C21C** 9703-5010-00P	
144	110	150	208	160	200	✓	✓	✓	FS6		**DG1-35144FB-C21C** 9703-6002-00P	
208	160	200	250	200	250	✓	✓	✓			**DG1-35208FB-C21C** 9703-6005-00P	
U_e 575 V AC, three-phase / U_2 575 V AC, three-phase, without BU, IP21												
Mains voltage (50/60Hz) U_{LN}: 380 (-15%) - 500 (+10%) V												
41	30	40	52	37	50	✓	–	✓	FS4	IP21/NEMA1	**DG1-35041FN-C21C** 9703-4004-00P	1 unit
52	37	50	62	45	60	✓	–	✓			**DG1-35052FN-C21C** 9703-4008-00P	
62	45	60	80	55	75	✓	–	✓			**DG1-35062FN-C21C** 9703-4012-00P	
80	55	75	100	75	100	✓	–	✓	FS5		**DG1-35080FN-C21C** 9703-5004-00P	
100	75	100	125	90	125	✓	–	✓			**DG1-35100FN-C21C** 9703-5008-00P	
125	90	125	144	110	150	✓	–	✓			**DG1-35125FN-C21C** 9703-5012-00P	
144	110	150	208	160	200	✓	–	✓	FS6		**DG1-35144FN-C21C** 9703-6004-00P	
208	160	200	250	200	250	✓	–	✓			**DG1-35208FN-C21C** 9703-6006-00P	

Notes

[1)] Overload cycle for 60 s every 600 s, 150% at 50 °C ambient temperature, 110% at 40 °C ambient temperature
[2)] For normal internally and externally ventilated four-pole three-phase asynchronous motors with 1500 rpm at 50 Hz and 1800 rpm at 60 Hz
[3)] At 400 V, 50 Hz/at 480 V, 60 Hz

2.6 DG1 variable frequency drives up to 630 kW

DG1 for three-phase motors 575 V, three-phase supply

Rated operational current[1]	Assigned motor output [1) 2) 3)]		Rated operational current[1]	Assigned motor output [1) 2) 3)]		Configuration			Frame size	Protection type	**Model code** Catalog number	Std. pack
I_n = 150% I_e			I_n = 110% I_e			Radio interference suppression filter	Brake chopper	DC choke				
A	kW	HP	A	kW	HP							
U_e 575 V AC, three-phase / U_2 575 V AC, three-phase, with BU, IP54												
Mains voltage (50/60Hz) U_{LN}: 380 (-15%) - 500 (+10%) V												
3.3	1.5	2	4.5	2.2	3	✓	✓	✓	FS1	IP54/NEMA12	**DG1-353D3FB-C54C** 9703-1102-00P	1 unit
4.5	2.2	3	7.5	4	5	✓	✓	✓			**DG1-354D5FB-C54C** 9703-1104-00P	
7.5	4	5	10	5.5	7.5	✓	✓	✓			**DG1-357D5FB-C54C** 9703-1106-00P	
10	5.5	7.5	13.5	7.5	10	✓	✓	✓	FS2		**DG1-35010FB-C54C** 9703-2102-00P	
13.5	7.5	10	18	11	15	✓	✓	✓			**DG1-35013FB-C54C** 9703-2104-00P	
18	11	15	22	15	20	✓	✓	✓			**DG1-35018FB-C54C** 9703-2106-00P	
22	15	20	27	18.5	25	✓	✓	✓	FS3		**DG1-35022FB-C54C** 9703-3102-00P	
27	18.5	25	34	22	30	✓	✓	✓			**DG1-35027FB-C54C** 9703-3104-00P	
34	22	30	41	30	40	✓	✓	✓			**DG1-35034FB-C54C** 9703-3106-00P	
41	30	40	52	37	50	✓	✓	✓	FS4		**DG1-35041FB-C54C** 9703-4102-00P	
52	37	50	62	45	60	✓	✓	✓			**DG1-35052FB-C54C** 9703-4106-00P	
62	45	60	80	55	75	✓	✓	✓			**DG1-35062FB-C54C** 9703-4110-00P	
80	55	75	100	75	100	✓	✓	✓	FS5		**DG1-35080FB-C54C** 9703-5102-00P	
100	75	100	125	90	125	✓	✓	✓			**DG1-35100FB-C54C** 9703-5106-00P	
125	90	125	144	110	150	✓	✓	✓			**DG1-35125FB-C54C** 9703-5110-00P	
144	110	150	208	160	200	✓	✓	✓	FS6		**DG1-35144FB-C54C** 9703-6102-00P	
208	160	200	250	200	250	✓	✓	✓			**DG1-35208FB-C54C** 9703-6105-00P	
U_e 575 V AC, three-phase / U_2 575 V AC, three-phase, without BU, IP54												
Supply voltage (50/60Hz) U_{LN}: 380 (-15%) - 500 (+10%) V												
41	30	40	52	37	50	✓		✓	FS4	IP54/NEMA12	**DG1-35041FN-C54C** 9703-4104-00P	1 unit
52	37	50	62	45	60	✓		✓			**DG1-35052FN-C54C** 9703-4108-00P	
62	45	60	80	55	75	✓		✓			**DG1-35062FN-C54C** 9703-4112-00P	
80	55	75	100	75	100	✓		✓	FS5		**DG1-35080FN-C54C** 9703-5104-00P	
100	75	100	125	90	125	✓		✓			**DG1-35100FN-C54C** 9703-5108-00P	
125	90	125	144	110	150	✓		✓			**DG1-35125FN-C54C** 9703-5112-00P	
144	110	150	208	160	200	✓		✓	FS6		**DG1-35144FN-C54C** 9703-6104-00P	
208	160	200	250	200	250	✓		✓			**DG1-35208FN-C54C** 9703-6106-00P	

Rated operational current[1]	Assigned motor output [1) 2) 3)]		Rated operational current[1]	Assigned motor output [1) 2) 3)]		Configuration			Frame size	Protection type	Model code Catalog number	Std. pack
I_n = 150% I_e			I_n = 110% I_e			Radio interference suppression filter	Brake chopper	DC choke				
A	kW	HP	A	kW	HP							
U_e 575 V AC, three-phase / U_2 575 V AC, three-phase, with BU, IP00												
Supply voltage (50/60Hz) U_{LN}: 380 (-15%) - 500 (+10%) V												
261	200	250	325	250	300	✓		✓	FS7	IP00	**DG1-35261FB-C00C** 3-4917-304A	1 unit
325	250	300	385	315	400	✓		✓			**DG1-35325FB-C00C** 3-4917-306A	
385	315	400	416	315	450	✓		✓			**DG1-35385FB-C00C** 3-4917-308A	
416	315	450	460	355	450	✓		✓	FS8		**DG1-35416FB-C00C** 3-4918-302A	
460	355	450	520	400	500	✓		✓			**DG1-35460FB-C00C** 3-4918-304A	
520	400	500	590	450	600	✓		✓			**DG1-35520FB-C00C** 3-4918-306A	
590	450	600	650	500	600	✓		✓			**DG1-35590FB-C00C** 3-4918-308A	
650	500	600	750	560	750	✓		✓			**DG1-35650FB-C00C** 3-4918-310A	
650	500	600	820	630	750	✓		✓			**DG1-35820FB-C00C** 3-4918-312A	
U_e 575 V AC, three-phase / U_2 575 V AC, three-phase, without BU, IP00												
Supply voltage (50/60Hz) U_{LN}: 380 (-15%) - 500 (+10%) V												
261	200	250	325	250	300	✓		✓	FS7	IP00	**DG1-35261FN-C00C** 3-4917-303A	
325	250	300	385	315	400	✓		✓			**DG1-35325FN-C00C** 3-4917-305A	
385	315	400	416	315	450	✓		✓			**DG1-35385FN-C00C** 3-4918-301A	
416	315	450	460	355	450	✓		✓	FS8		**DG1-35416FN-C00C** 3-4918-301A	
460	355	450	520	400	500	✓		✓			**DG1-35460FN-C00C** 3-4918-303A	
520	400	500	590	450	600	✓		✓			**DG1-35520FN-C00C** 3-4918-305A	
590	450	600	650	500	600	✓		✓			**DG1-35590FN-C00C** 3-4918-307A	
650	500	600	750	560	750	✓		✓			**DG1-35650FN-C00C** 3-4918-309A	
650	500	600	820	630	750	✓		✓			**DG1-35820FN-C00C** 3-4918-311A	

Notes

[1)] Overload cycle for 60 s every 600 s, 150% at 50 °C ambient temperature, 110% at 40 °C ambient temperature
[2)] For normal internally and externally ventilated four-pole three-phase asynchronous motors with 1500 rpm at 50 Hz and 1800 rpm at 60 Hz
[3)] At 400 V, 50 Hz/at 480 V, 60 Hz

Accessories

	Description	For use with	Model code Catalog number	Std. pack
	Network interfaces			
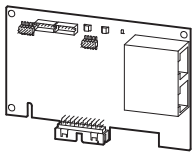	Networking: PROFINET	DG1, DH1	**DXG-NET-PROFINET** EP-400003	1 unit
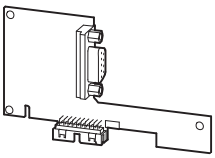	Networking: PROFIBUS		**DXG-NET-PROFIBUS** 744-A2617-00P	
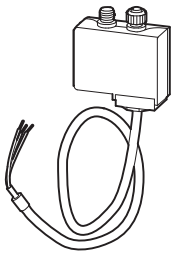	Networking: SWD-IP54		**DXG-NET-SWD-IP54** 744-F0191-00P	
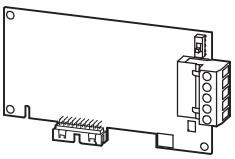	Networking: CANOPEN		**DXG-NET-CANOPEN** 744-F0116-00P	
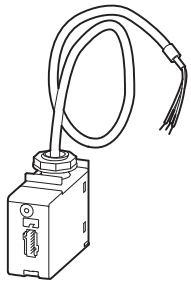	Networking: SWD-IP20		**DXG-NET-SWD-IP20** 744-F0190-00P	
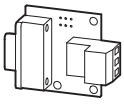	D-sub adapter on terminals		**DXG-MNT-PROFIBUS** 744-A2618-00P	

I/O expansions

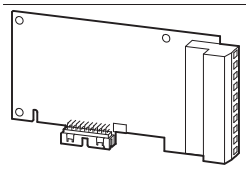	I/O expansion: THER1	DG1, DH1	**DXG-EXT-THER1** 744-A2615-00P	1 unit
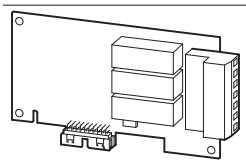	I/O expansion: 3RO		**DXG-EXT-3RO** 744-A2614-00P	
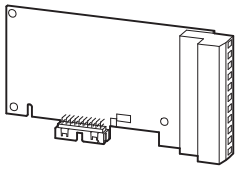	I/O expansion: 3DI3DO1T		**DXG-EXT-3DI3DO1T** 744-A2612-00P	
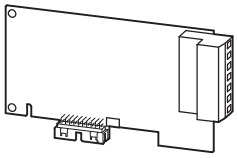	I/O expansion: 1AI2AO		**DXG-EXT-1AI2AO** 744-A2613-00P	
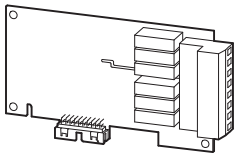	I/O expansion: 6DI		**DXG-EXT-6DI** 744-A2616-00P	

Keypad options

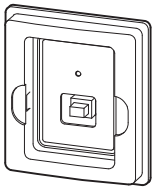	Remote keypad mounting frame	DG1, DH1, DM1	**DXG-KEY-HOLDER** 730-32032-00P	1 unit
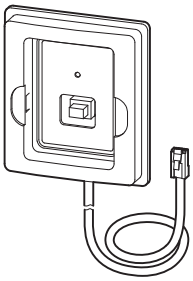	Remote keypad kit (3 m cable)		**DXG-KEY-RMTKIT** 730-32033-00P	
	Type12/IP54 keypad stopper		**DXG-KEY-N12PLUG** 730-32038-00P	
	Standard keypad		**DXG-KEY-LCD** 730-32047-00P	
	RJ45 male-to-male keypad connector		**DXG-SPR-KEYM2M** 744-S0000-00P	

DG1

	IP54 keypad adapter			
	IP54 keypad cable adapter	DG1, DH1	**DXG-KEY-N12CON** 199366	1 unit
	Battery			
	Spare battery	DG1, DH1	**DXG-ACC-RTBATT** 730-32039-00P	1 unit
	Cable			
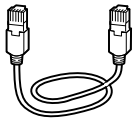	RJ45 cable, 1m	DG1, DH1	**DXG-CBL-1M0** 730-32034-00P	1 unit
	RJ45 cable, 3m		**DXG-CBL-3M0** 730-32035-00P	
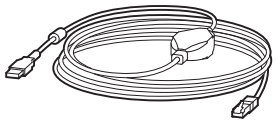	USB to RJ45 cable, 1.5m	DG1, DH1, DM1, DX1	**DXX-CBL-PCCABLE** 3-5975-001A	
	Unit-through mounting frames			
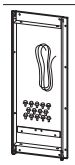	Unit-through frame, frame size 1	DG1, DH1	**DXG-ACC-FR1N12FK** 730-32022-00P	1 unit
	Unit-through frame, frame size 2		**DXG-ACC-FR2N12FK** 730-32023-00P	
	Unit-through frame, frame size 3		**DXG-ACC-FR3N12FK** 730-32024-00P	
	Unit-through frame, frame size 4		**DXG-ACC-FR4N12FK** 730-32025-00P	
	Unit-through frame, frame size 5		**DXG-ACC-FR5N12FK** 730-32026-00P	
	Unit-through frame, frame size 6		**DXG-ACC-FR6N12FK** 744-A3845-00P	
	IP21 to IP54 retrofit kit, frame size 1 and frame size 2			
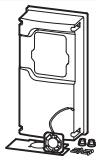	Retrofit kit for conversion to IP54/NEMA12, frame size 1, 400 V	DG1, DH1	**DXG-ACC-4FR1N12KIT** 730-32029-00P	1 unit
	Retrofit kit for conversion to IP54/NEMA12, frame size 1, 230 V		**DXG-ACC-2FR1N12KIT** 744-A2815-00P	
	Retrofit kit for conversion to IP54/NEMA12, frame size 2		**DXG-ACC-FR2N12KIT** 730-32030-00P	

Assigned switching and protective elements for DG1

Engineering

Model code	power rating 110 %	input current 110 %	output current 110 %	power rating 150 %	input current 150 %	output current 150 %	MCCB Type 1 coordination @ 110 %	Fuse Type 1 coordination @ 110 %	MCCB Type 1 coordination @ 150 %	Fuse Type 1 coordination @ 150 %
	kW	A	A	kW	A	A				
230 V AC, three-phase/230 V AC, three-phase										
DG1-323D7EB-C20C	1.1	5.6	4.8	0.75	4.3	3.7	PKZM0-6,3	C10G8	PKZM0-10	C10G10
DG1-324D8EB-C20C	1.5	7.6	6.6	1.1	5.6	4.8	PKZM0-10	C10G10	PKZM0-10	C10G10
DG1-326D6EB-C20C	1.5	9	7.8	1.5	7.6	6.6	PKZM0-10	C10G10	PKZM0-12	C10G12
DG1-323D7…	1.1	4.4	4.8	0.75	3.2	3.7	PKZM0-6,3	C10G8	PKZM0-6,3	C10G8
DG1-324D8…	1.5	6.1	6.6	1.1	4.4	4.8	PKZM0-10	C10G10	PKZM0-10	C10G10
DG1-326D6…	1.5	7.2	7.8	1.5	6.1	6.6	PKZM0-10	C10G10	PKZM0-10	C10G10
DG1-327D8…	2.2	10.2	11	1.5	7.2	7.8	PKZM0-12	C10G12	PKZM0-12	C10G12
DG1-32011…	3	11.6	12.5	2.2	10.2	11	PKZM0-16	C10G16	PKZM0-16	C10G16
DG1-32012…	4	16.3	17.5	3	10.2	12.5	PKZM0-20	C10G20	PKZM0-16	C10G16
DG1-32017…	5.5	23.2	25	4	16.2	17.5	PKZM0-32	C10G32	PKZM0-25	C10G25
DG1-32025…	7.5	29	31	5.5	23.1	25	PKZM0-32	C10G32	PKZM4-40	C22G40
DG1-32031…	11	44.2	48	7.5	28.7	31	PKZM4-50	C22G50	PKZM4-50	C22G50
DG1-32048…	15	56	61	11	44.4	48	PKZM4-63	C22G63	NZMC1-A80	C22G80
DG1-32061…	22	64.6	75	15	56.4	61	NZMC1-A80	C22G80	NZMC1-A100	C22G100
DG1-32075…	22	78	88	22	69.4	75	NZMC1-A100	C22G100	NZMC1-A125	C22G125
DG1-32088…	30	94.3	114	22	81.4	88	NZMC1-A125	C22G125	NZMC1-A125	C22G125
DG1-32114…	45	129	143	30	105.5	114	NZMC1-A160	160NHG02B-400	NZMC1-A160	160NHG02B-400
DG1-32143…	45	157	170	45	132.3	143	NZMC2-A200	200NHG02B-400	NZMC2-A200	200NHG02B-400
DG1-32170…	55	189	211	45	157.3	170	NZMC2-A250	250NHG02B-400	NZMC2-A250	250NHG02B-400
DG1-32211…	75	242.8	261	55	196.3	211	NZMC2-A300	315NHG2B-400	NZMC2-A300	315NHG2B-400
DG1-32248…	90	290.3	312	75	230.7	248	NZMC3-A400	400NHG03B-400	NZMC3-A400	400NHG03B-400
400 V AC, three-phase/400 V AC, three-phase										
DG1-342D2EB-C20C	1.1	4.3	3.3	0.75	2.7	2.2	PKZM0-6,3	C10G8	PKZM0-6,3	C10G8
DG1-343D3EB-C20C	1.5	5.5	4.3	1.1	4.3	3.3	PKZM0-6,3	C10G8	PKZM0-10	C10G10
DG1-344D3EB-C20C	2.2	7.1	5.6	1.5	5.5	4.3	PKZM0-10	C10G10	PKZM0-10	C10G10
DG1-345D6EB-C20C	3	9.6	7.6	2.2	7.1	5.6	PKZM0-12	C10G12	PKZM0-12	C10G12
DG1-342D2…	1.1	3.1	3.3	0.75	2	2.2	PKZM0-6,3	C10G8	PKZM0-6,3	C10G8
DG1-343D3…	1.5	4	4.3	1.1	3.1	3.3	PKZM0-6,3	C10G8	PKZM0-6,3	C10G8
DG1-344D3…	2.2	5.2	5.6	1.5	4	4.3	PKZM0-6,3	C10G8	PKZM0-10	C10G10
DG1-345D6…	3	7.1	7.6	2.2	5.2	5.6	PKZM0-10	C10G10	PKZM0-10	C10G10
DG1-347D6…	4	8.4	9	3	7.1	7.6	PKZM0-10	C10G10	PKZM0-12	C10G12
DG1-349D0…	5.5	11.2	12	4	8.4	9	PKZM0-16	C10G16	PKZM0-16	C10G16
DG1-34012…	7.5	15	16	5.5	11.2	12	PKZM0-20	C10G20	PKZM0-25	C10G25
DG1-34016…	11	21.5	23	7.5	14.9	16	PKZM0-25	C10G25	PKZM0-25	C10G25
DG1-34023…	15	29	31	11	21.4	23	PKZM0-32	C10G32	PKZM4-40	C22G40
DG1-34031…	18.5	35.2	38	15	28.8	31	PKZM4-40	C22G40	PKZM4-50	C22G50
DG1-34038…	22	42.6	46	18.5	35.3	38	PKZM4-50	C22G50	PKZM4-63	C22G63
DG1-34046…	30	55.7	61	22	42.8	46	PKZM4-63	C22G63	NZMC1-A80	C22G80
DG1-34061…	37	65.7	72	30	56.7	61	NZMC1-A80	C22G80	NZMC1-A100	C22G100
DG1-34072…	45	79.4	87	37	66.9	72	NZMC1-A100	C22G100	NZMC1-A125	C22G125
DG1-34087…	55	97	105	45	80.9	87	NZMC1-A125	C22G125	NZMC1-A125	C22G125
DG1-34105…	75	129	140	55	97.6	105	NZMC1-A160	160NHG02B-400	NZMC1-A160	160NHG02B-400
DG1-34140…	90	157	170	75	130.1	140	NZMC2-A200	200NHG02B-400	NZMC2-A200	200NHG02B-400
DG1-34170…	110	189	205	90	158	170	NZMC2-A250	250NHG02B-400	NZMC2-A250	250NHG02B-400
DG1-34205…	132	246.2	261	110	193.4	205	NZMC2-A300	315NHG2B-400	NZMC2-A300	315NHG2B-400
DG1-34245…	160	292.4	310	132	231.1	245	NZMC3-A400	400NHG03B-400	NZMC3-A400	400NHG03B-400
DG1-34310…	200	385	385	160	311	310	NZMC3-A500	500NHG3B-400	NZMC3-A500	500NHG3B-400
DG1-34385…	250	460	460	200	391	385	NZMN4-AX630	630NHG3B-400	NZMN4-AX630	630NHG3B-400
DG1-34460…	250	520	520	250	459	460	NZMN4-AX630	630NHG3B-400	NZMN4-AX800	800NHG4G
DG1-34520…	315	590	590	250	515	520	NZMN4-AX800	800NHG4G	NZMN4-AX800	800NHG4G
DG1-34590…	355	648	650	315	587	590	NZMN4-AX800	800NHG4G	NZMN4-AX1000	1000NHG4G
DG1-34650…	400	724	730	355	642	650	NZMN4-AX800	800NHG4G	NZMN4-AX1000	1000NHG4G
DG1-34730…	450	822	820	400	731	730	NZMN4-AX1000	1000NHG4G	NZMN4-AX1250	1250NHG4G
DG1-34820…	500	916	920	450	815	820	NZMN4-AX1250	1250NHG4G	NZMN4-AX1250	1250NHG4G
DG1-34920…	560	1030	1010	500	908	920	NZMN4-AX1250	1250NHG4G	NZMN4-AX1600	170M8557D
DG1-341K0…	630	1164	1180	500	908	920	NZMN4-AX1600	170M8557D	NZMN4-AX1600	170M8557D

minimum braking resistance	brake resistor, 10 % duty cycle @ 110 %	brake resistor, 20 % duty cycle @ 110 %	brake resistor, 40 % duty cycle @ 110 %	brake resistor, 10 % duty cycle @ 150 %	brake resistor, 20 % duty cycle @ 150 %	brake resistor, 40 % duty cycle @ 150 %
30	DX-BR050-600	DX-BR050-600	DX-BR050-0K8	DX-BR050-600	DX-BR050-600	DX-BR050-0K8
30	DX-BR050-600	DX-BR050-0K8	DX-BR035-1K1	DX-BR050-600	DX-BR050-600	DX-BR050-0K8
30	DX-BR050-600	DX-BR050-0K8	DX-BR035-1K1	DX-BR050-600	DX-BR050-0K8	DX-BR035-1K1
30	DX-BR050-600	DX-BR050-600	DX-BR050-0K8	DX-BR050-600	DX-BR050-600	DX-BR050-0K8
30	DX-BR050-600	DX-BR050-0K8	DX-BR035-1K1	DX-BR050-600	DX-BR050-600	DX-BR050-0K8
30	DX-BR050-600	DX-BR050-0K8	DX-BR035-1K1	DX-BR050-600	DX-BR050-0K8	DX-BR035-1K1
30	DX-BR050-600	DX-BR050-0K8	DX-BR040-3K1	DX-BR050-600	DX-BR050-0K8	DX-BR035-1K1
30	DX-BR050-0K8	DX-BR035-1K1	DX-BR040-3K1	DX-BR050-600	DX-BR050-0K8	DX-BR040-3K1
20	DX-BR022-1K4	DX-BR022-1K4	DX-BR022-3K1	DX-BR022-1K4	DX-BR022-1K4	DX-BR022-3K1
20	DX-BR022-1K4	DX-BR022-3K1	DX-BR022-5K1	DX-BR022-1K4	DX-BR022-1K4	DX-BR022-3K1
20	DX-BR022-1K4	DX-BR022-3K1	DX-BR022-5K1	DX-BR022-1K4	DX-BR022-3K1	DX-BR022-5K1
10	DX-BR012-3K1	DX-BR012-5K1	DX-BR012-9K2	DX-BR012-3K1	DX-BR012-3K1	DX-BR012-5K1
10	DX-BR012-3K1	DX-BR012-5K1	DX-BR012-9K2	DX-BR012-3K1	DX-BR012-5K1	DX-BR012-9K2
3.3	DX-BR006-5K1	DX-BR006-9K2	DX-BR006-18K1	DX-BR006-5K1	DX-BR006-5K1	DX-BR006-9K2
3.3	DX-BR006-5K1	DX-BR006-9K2	DX-BR006-18K1	DX-BR006-5K1	DX-BR006-9K2	DX-BR006-18K1
3.3	DX-BR006-9K2	DX-BR006-18K1	DX-BR006-18K1	DX-BR006-5K1	DX-BR006-9K2	DX-BR006-18K1
1.4	DX-BR006-9K2	DX-BR006-18K1	DX-BR006-33K3	DX-BR006-9K2	DX-BR006-18K1	DX-BR006-18K1
1.4	DX-BR006-9K2	DX-BR006-18K1	DX-BR006-33K3	DX-BR006-9K2	DX-BR006-18K1	DX-BR006-33K3
1.4	DX-BR006-18K1	DX-BR006-18K1	DX-BR006-33K3	DX-BR006-9K2	DX-BR006-18K1	DX-BR006-33K3
1.4	DX-BR006-18K1	DX-BR006-33K3	DX-BR002-54K3	DX-BR006-9K2	DX-BR006-18K1	DX-BR006-33K3
1.4	DX-BR006-18K1	DX-BR006-33K3	DX-BR002-54K3	DX-BR006-18K1	DX-BR006-33K3	DX-BR002-54K3
63	DX-BR100-240	DX-BR100-600	DX-BR100-1K1	DX-BR100-240	DX-BR100-600	DX-BR100-1K1
63	DX-BR100-600	DX-BR100-1K1	DX-BR075-1K1	DX-BR100-240	DX-BR100-600	DX-BR100-1K1
63	DX-BR100-600	DX-BR100-1K1	DX-BR100-1K6	DX-BR100-600	DX-BR100-1K1	DX-BR075-1K1
63	DX-BR100-1K1	DX-BR075-1K1	P: 2x DX-BR150-1K1	DX-BR100-600	DX-BR100-1K1	DX-BR100-1K6
63	DX-BR100-240	DX-BR100-600	DX-BR100-1K1	DX-BR100-240	DX-BR100-600	DX-BR100-1K1
63	DX-BR100-600	DX-BR100-1K1	DX-BR075-1K1	DX-BR100-240	DX-BR100-600	DX-BR100-1K1
63	DX-BR100-600	DX-BR100-1K1	DX-BR100-1K6	DX-BR100-600	DX-BR100-1K1	DX-BR075-1K1
63	DX-BR100-1K1	DX-BR075-1K1	P: 2x DX-BR150-1K1	DX-BR100-600	DX-BR100-1K1	DX-BR100-1K6
63	DX-BR100-1K1	DX-BR100-1K6	DX-BR075-5K1	DX-BR100-1K1	DX-BR075-1K1	P: 2x DX-BR150-1K1
63	DX-BR075-1K1	P: 2x DX-BR150-1K1	DX-BR075-5K1	DX-BR100-1K1	DX-BR100-1K6	DX-BR075-5K1
42	DX-BR047-3K1	DX-BR047-3K1	DX-BR050-5K1	DX-BR075-1K1	DX-BR047-3K1	DX-BR050-5K1
42	DX-BR047-3K1	DX-BR050-5K1	P: 2x DX-BR100-6K2	DX-BR047-3K1	DX-BR047-3K1	DX-BR050-5K1
42	DX-BR047-3K1	DX-BR050-5K1	P: 2x DX-BR100-6K2	DX-BR047-3K1	DX-BR050-5K1	P: 2x DX-BR100-6K2
14	DX-BR022-5K1	DX-BR022-9K2	P: 2 x DX-BR047-9K2	DX-BR022-3K1	DX-BR022-5K1	DX-BR022-9K2
14	DX-BR022-5K1	DX-BR022-9K2	P: 2 x DX-BR047-9K2	DX-BR022-5K1	DX-BR022-9K2	P: 2 x DX-BR047-9K2
14	DX-BR022-9K2	P: 2 x DX-BR050-5K1	P: 2 x DX-BR047-9K2	DX-BR022-5K1	DX-BR022-9K2	P: 2 x DX-BR047-9K2
6.5	DX-BR012-9K2	DX-BR012-18K1	P: 3 x DX-BR022-9K2	DX-BR012-9K2	P: 2 x DX-BR022-5K1	DX-BR012-18K1
6.5	DX-BR012-9K2	DX-BR012-18K1	P: 3 x DX-BR022-9K2	DX-BR012-9K2	DX-BR012-18K1	P: 3 x DX-BR022-9K2
6.5	P: 2 x DX-BR022-5K1	P: 2 x DX-BR022-9K2	R: 2 x DX-BR006-33K3	DX-BR012-9K2	DX-BR012-18K1	P: 3 x DX-BR022-9K2
3.3	DX-BR006-18K1	DX-BR006-33K3	R: 2 x DX-BR002-54K3	DX-BR006-18K1	DX-BR006-33K3	DX-BR006-33K3
3.3	DX-BR006-18K1	DX-BR006-33K3	R: 2 x DX-BR002-54K3	DX-BR006-18K1	DX-BR006-33K3	R: 2 x DX-BR002-54K3
3.3	DX-BR006-33K3	R: 2 x DX-BR002-54K3	R: 2 x DX-BR002-102K4	DX-BR006-18K1	DX-BR006-33K3	R: 2 x DX-BR002-54K3
3.3	DX-BR006-33K3	R: 2 x DX-BR002-54K3	R: 2 x DX-BR002-102K4	DX-BR006-33K3	R: 2 x DX-BR002-54K3	R: 2 x DX-BR002-102K4
3.3	DX-BR006-33K3	R: 2 x DX-BR002-54K3	R: 2 x DX-BR002-102K4	DX-BR006-33K3	R: 2 x DX-BR002-54K3	R: 2 x DX-BR002-102K4
1.4	DX-BR002-54K3	DX-BR002-102K4	on request	DX-BR006-33K3	DX-BR002-54K3	DX-BR002-102K4
1.4	DX-BR002-54K3	DX-BR002-102K4	on request	DX-BR002-54K3	DX-BR002-102K4	DX-BR002-102K4
1.4	DX-BR002-54K3	DX-BR002-102K4	on request	DX-BR002-54K3	DX-BR002-102K4	on request
1.4	DX-BR002-102K4	on request	on request	DX-BR002-54K3	DX-BR002-102K4	on request
2 x 1.4	2 x DX-BR006-33K3	2 x DX-BR002-102K4	on request	2 x DX-BR006-33K3	2 x DX-BR002-54K3	2 x DX-BR002-102K4
2 x 1.4	2 x DX-BR002-54K3	2 x DX-BR002-102K4	on request	2 x DX-BR006-33K3	2 x DX-BR002-102K4	on request
2 x 1.4	2 x DX-BR002-54K3	2 x DX-BR002-102K4	on request	2 x DX-BR002-54K3	2 x DX-BR002-102K4	on request
2 x 1.4	2 x DX-BR002-54K3	2 x DX-BR002-102K4	on request	2 x DX-BR002-54K3	2 x DX-BR002-102K4	on request
2 x 1.4	2 x DX-BR002-54K3	2 x DX-BR002-102K4	on request	2 x DX-BR002-54K3	2 x DX-BR002-102K4	on request
2 x 1.4	2 x DX-BR002-102K4	on request	on request	2 x DX-BR002-54K3	2 x DX-BR002-102K4	on request

2.6 DG1 variable frequency drives up to 630 kW

Assigned switching and protective elements for DG1

Model code	RCD type @ 110 %	RCD type @ 150%	optional mains contactor @ 110 %	optional mains contactor @ 150 %	External EMC filter @ 110 %	External EMC filter @ 150 %	External EMC filter (low leakage current) @ 110 %
230 V AC, three-phase/230 V AC, three-phase							
DG1-323D7EB-C20C	FRCdM-25/4/003-G/Bfq	FRCdM-25/4/003-G/Bfq	DILM7-10(24VDC)	DILM7-10(24VDC)	DX-EMC34-008	DX-EMC34-008	DX-EMC34-008-L
DG1-324D8EB-C20C	FRCdM-25/4/003-G/Bfq	FRCdM-25/4/003-G/Bfq	DILM7-10(24VDC)	DILM7-10(24VDC)	DX-EMC34-008	DX-EMC34-008	DX-EMC34-008-L
DG1-326D6EB-C20C	FRCdM-25/4/003-G/Bfq	FRCdM-25/4/003-G/Bfq	DILM7-10(24VDC)	DILM7-10(24VDC)	DX-EMC34-016	DX-EMC34-008	DX-EMC34-016-L
DG1-323D7…	FRCdM-25/4/003-G/Bfq	FRCdM-25/4/003-G/Bfq	DILM7-10(24VDC)	DILM7-10(24VDC)	DX-EMC34-008	DX-EMC34-008	DX-EMC34-008-L
DG1-324D8…	FRCdM-25/4/003-G/Bfq	FRCdM-25/4/003-G/Bfq	DILM7-10(24VDC)	DILM7-10(24VDC)	DX-EMC34-008	DX-EMC34-008	DX-EMC34-008-L
DG1-326D6…	FRCdM-25/4/003-G/Bfq	FRCdM-25/4/003-G/Bfq	DILM7-10(24VDC)	DILM7-10(24VDC)	DX-EMC34-008	DX-EMC34-008	DX-EMC34-008-L
DG1-327D8…	FRCdM-25/4/003-G/Bfq	FRCdM-25/4/003-G/Bfq	DILM7-10(24VDC)	DILM7-10(24VDC)	DX-EMC34-016	DX-EMC34-008	DX-EMC34-016-L
DG1-32011…	FRCdM-25/4/003-G/Bfq	FRCdM-25/4/003-G/Bfq	DILM7-10(24VDC)	DILM7-10(24VDC)	DX-EMC34-016	DX-EMC34-016	DX-EMC34-016-L
DG1-32012…	FRCdM-25/4/003-G/Bfq	FRCdM-25/4/003-G/Bfq	DILM7-10(24VDC)	DILM7-10(24VDC)	DX-EMC34-030	DX-EMC34-016	DX-EMC34-030-L
DG1-32017…	FRCdM-40/4/003-G/Bfq	FRCdM-25/4/003-G/Bfq	DILM17-10(RDC24)	DILM17-10(RDC24)	DX-EMC34-030	DX-EMC34-030	DX-EMC34-030-L
DG1-32025…	FRCdM-40/4/003-G/Bfq	FRCdM-40/4/003-G/Bfq	DILM17-10(RDC24)	DILM17-10(RDC24)	DX-EMC34-030	DX-EMC34-030	DX-EMC34-030-L
DG1-32031…	FRCdM-63/4/003-G/Bfq	FRCdM-63/4/003-G/Bfq	DILM40(RDC24)	DILM40(RDC24)	DX-EMC34-055	DX-EMC34-030	DX-EMC34-055-L
DG1-32048…	FRCdM-63/4/003-G/Bfq		DILM40(RDC24)	DILM50(RDC24)	DX-EMC34-075	DX-EMC34-055	DX-EMC34-075-L
DG1-32061…			DILM50(RDC24)	DILM72(RDC24)	DX-EMC34-075	DX-EMC34-075	DX-EMC34-075-L
DG1-32075…			DILM72(RDC24)	DILM80(RDC24)	DX-EMC34-100	DX-EMC34-075	DX-EMC34-100-L
DG1-32088…			DILM80(RDC24)	DILM95(RDC24)	DX-EMC34-100	DX-EMC34-100	DX-EMC34-100-L
DG1-32114…			DILM115(RDC24)	DILM115(RDC24)	DX-EMC34-130	DX-EMC34-130	DX-EMC34-130-L
DG1-32143…			DILM150(RDC24)	DILM170(RDC24)	DX-EMC34-180	DX-EMC34-180	DX-EMC34-180-L
DG1-32170…			DILM170(RDC24)	DILM185A/22(RAC240)	DX-EMC34-250	DX-EMC34-180	DX-EMC34-250-L
DG1-32170…			DILM185A/22(RAC240)	DILM225A/22(RAC240)	DX-EMC34-250	DX-EMC34-250	DX-EMC34-250-L
DG1-32248…			DILM250/22(RA250)	DILM250/22(RA250)	DX-EMC34-400	DX-EMC34-250	DX-EMC34-400-L
400 V AC, three-phase/400 V AC, three-phase							
DG1-342D2EB-C20C	FRCdM-63/4/003-G/Bfq	FRCdM-25/4/003-G/Bfq	DILM7-10(24VDC)	DILM7-10(24VDC)	DX-EMC34-008	DX-EMC34-008	DX-EMC34-008-L
DG1-343D3EB-C20C	FRCdM-63/4/003-G/Bfq	FRCdM-25/4/003-G/Bfq	DILM7-10(24VDC)	DILM7-10(24VDC)	DX-EMC34-008	DX-EMC34-008	DX-EMC34-008-L
DG1-344D3EB-C20C	FRCdM-63/4/003-G/Bfq	FRCdM-25/4/003-G/Bfq	DILM7-10(24VDC)	DILM7-10(24VDC)	DX-EMC34-008	DX-EMC34-008	DX-EMC34-008-L
DG1-345D6EB-C20C	FRCdM-63/4/003-G/Bfq	FRCdM-25/4/003-G/Bfq	DILM7-10(24VDC)	DILM7-10(24VDC)	DX-EMC34-016	DX-EMC34-008	DX-EMC34-016-L
DG1-342D2…	FRCdM-63/4/003-G/Bfq	FRCdM-25/4/003-G/Bfq	DILM7-10(24VDC)	DILM7-10(24VDC)	DX-EMC34-008	DX-EMC34-008	DX-EMC34-008-L
DG1-343D3…	FRCdM-63/4/003-G/Bfq	FRCdM-25/4/003-G/Bfq	DILM7-10(24VDC)	DILM7-10(24VDC)	DX-EMC34-008	DX-EMC34-008	DX-EMC34-008-L
DG1-344D3…	FRCdM-63/4/003-G/Bfq	FRCdM-25/4/003-G/Bfq	DILM7-10(24VDC)	DILM7-10(24VDC)	DX-EMC34-008	DX-EMC34-008	DX-EMC34-008-L
DG1-345D6…	FRCdM-63/4/003-G/Bfq	FRCdM-25/4/003-G/Bfq	DILM7-10(24VDC)	DILM7-10(24VDC)	DX-EMC34-008	DX-EMC34-008	DX-EMC34-008-L
DG1-347D6…	FRCdM-63/4/003-G/Bfq	FRCdM-25/4/003-G/Bfq	DILM7-10(24VDC)	DILM7-10(24VDC)	DX-EMC34-016	DX-EMC34-008	DX-EMC34-016-L
DG1-349D0…	FRCdM-63/4/003-G/Bfq	FRCdM-25/4/003-G/Bfq	DILM7-10(24VDC)	DILM7-10(24VDC)	DX-EMC34-016	DX-EMC34-016	DX-EMC34-016-L
DG1-34012…	FRCdM-25/4/003-G/Bfq	FRCdM-25/4/003-G/Bfq	DILM7-10(24VDC)	DILM7-10(24VDC)	DX-EMC34-016	DX-EMC34-016	DX-EMC34-016-L
DG1-34016…	FRCdM-25/4/003-G/Bfq	FRCdM-25/4/003-G/Bfq	DILM17-10(RDC24)	DILM17-10(RDC24)	DX-EMC34-030	DX-EMC34-016	DX-EMC34-030-L
DG1-34023…	FRCdM-40/4/003-G/Bfq	FRCdM-40/4/003-G/Bfq	DILM17-10(RDC24)	DILM17-10(RDC24)	DX-EMC34-030	DX-EMC34-030	DX-EMC34-030-L
DG1-34031…	FRCdM-40/4/003-G/Bfq	FRCdM-63/4/003-G/Bfq	DILM17-10(RDC24)	DILM40(RDC24)	DX-EMC34-042	DX-EMC34-030	DX-EMC34-042-L
DG1-34038…	FRCdM-63/4/003-G/Bfq	FRCdM-63/4/003-G/Bfq	DILM40(RDC24)	DILM40(RDC24)	DX-EMC34-055	DX-EMC34-030	DX-EMC34-055-L
DG1-34046…	FRCdM-63/4/003-G/Bfq		DILM40(RDC24)	DILM40(RDC24)	DX-EMC34-075	DX-EMC34-055	DX-EMC34-075-L
DG1-34061…			DILM50(RDC24)	DILM72(RDC24)	DX-EMC34-075	DX-EMC34-075	DX-EMC34-075-L
DG1-34072…			DILM72(RDC24)	DILM80(RDC24)	DX-EMC34-100	DX-EMC34-075	DX-EMC34-100-L
DG1-34087…			DILM80(RDC24)	DILM95(RDC24)	DX-EMC34-100	DX-EMC34-100	DX-EMC34-100-L
DG1-34105…			DILM115(RDC24)	DILM115(RDC24)	DX-EMC34-130	DX-EMC34-100	DX-EMC34-130-L
DG1-34140…			DILM150(RDC24)	DILM170(RDC24)	DX-EMC34-180	DX-EMC34-180	DX-EMC34-180-L
DG1-34170…			DILM170(RDC24)	DILM185A/22(RAC240)	DX-EMC34-250	DX-EMC34-180	DX-EMC34-250-L
DG1-34205…			DILM185A/22(RAC240)	DILM225A/22(RAC240)	DX-EMC34-250	DX-EMC34-250	DX-EMC34-250-L
DG1-34245…			DILM250/22(RA250)	DILM250/22(RA250)	DX-EMC34-400	DX-EMC34-250	DX-EMC34-400-L
DG1-34310…			DILM400/22(RA250)	DILM400/22(RA250)	DX-EMC34-400	DX-EMC34-400	DX-EMC34-400-L
DG1-34385…			DILM500/22(RA250)	DILM500/22(RA250)	DX-EMC34-750	DX-EMC34-400	DX-EMC34-750-L
DG1-34460…			DILM500/22(RA250)	DILM580/22(RA250)	DX-EMC34-750	DX-EMC34-750	DX-EMC34-750-L
DG1-34520…			DILM500/22(RA250)	DILM580/22(RA250)	DX-EMC34-750	DX-EMC34-750	DX-EMC34-750-L
DG1-34590…			DILM580/22(RA250)	DILM750/22(RA250)	DX-EMC34-750	DX-EMC34-750	DX-EMC34-750-L
DG1-34650…			DILM580/22(RA250)	DILM820/22(RA250)	DX-EMC34-750	DX-EMC34-750	DX-EMC34-750-L
DG1-34730…			DILM820/22(RA250)	DILH1200/22(RAW250)		DX-EMC34-750	
DG1-34820…			DILH1200/22(RAW250)	DILH1400/22(RA250)			
DG1-34920…			DILH1200/22(RAW250)	DILH1400/22(RA250)			
DG1-341K0…			DILH1400/22(RA250)	DILH1400/22(RA250)			

External EMC filter (low leakage current) @ 150 %	Mains choke @ 110 %	U_K	Mains choke @ 150 %	U_K	passive harmonic filter @ 110 %	passive harmonic filter @ 150 %
DX-EMC34-008-L	DX-LN3-010	4 %	DX-LN3-010	4 %	DX-PHF34-010	DX-PHF34-010
DX-EMC34-008-L	DX-LN3-010	4 %	DX-LN3-010	4 %	DX-PHF34-010	DX-PHF34-010
DX-EMC34-008-L	DX-LN3-010	4 %	DX-LN3-010	4 %	DX-PHF34-010	DX-PHF34-010
DX-EMC34-008-L					DX-PHF34-010	DX-PHF34-010
DX-EMC34-008-L					DX-PHF34-010	DX-PHF34-010
DX-EMC34-008-L					DX-PHF34-010	DX-PHF34-010
DX-EMC34-008-L					DX-PHF34-019	DX-PHF34-010
DX-EMC34-016-L					DX-PHF34-019	DX-PHF34-019
DX-EMC34-016-L					DX-PHF34-019	DX-PHF34-019
DX-EMC34-030-L					DX-PHF34-026	DX-PHF34-019
DX-EMC34-030-L					DX-PHF34-035	DX-PHF34-026
DX-EMC34-030-L					DX-PHF34-073	DX-PHF34-035
DX-EMC34-055-L					DX-PHF34-073	DX-PHF34-073
DX-EMC34-075-L					DX-PHF34-073	DX-PHF34-073
DX-EMC34-075-L					DX-PHF34-102	DX-PHF34-073
DX-EMC34-100-L					DX-PHF34-102	DX-PHF34-102
DX-EMC34-130-L					DX-PHF34-144	DX-PHF34-144
DX-EMC34-180-L					DX-PHF34-180	DX-PHF34-144
DX-EMC34-180-L					DX-PHF34-217	DX-PHF34-180
DX-EMC34-250-L					DX-PHF34-289	DX-PHF34-217
DX-EMC34-250-L					DX-PHF34-325	DX-PHF34-289

DX-EMC34-008-L					DX-PHF34-010	DX-PHF34-010
DX-EMC34-008-L					DX-PHF34-010	DX-PHF34-010
DX-EMC34-008-L					DX-PHF34-010	DX-PHF34-010
DX-EMC34-008-L					DX-PHF34-010	DX-PHF34-010
DX-EMC34-008-L					DX-PHF34-010	DX-PHF34-010
DX-EMC34-008-L					DX-PHF34-010	DX-PHF34-010
DX-EMC34-008-L					DX-PHF34-010	DX-PHF34-010
DX-EMC34-008-L					DX-PHF34-010	DX-PHF34-010
DX-EMC34-008-L					DX-PHF34-010	DX-PHF34-010
DX-EMC34-016-L					DX-PHF34-019	DX-PHF34-010
DX-EMC34-016-L					DX-PHF34-019	DX-PHF34-019
DX-EMC34-016-L					DX-PHF34-026	DX-PHF34-019
DX-EMC34-030-L					DX-PHF34-035	DX-PHF34-026
DX-EMC34-030-L					DX-PHF34-044	DX-PHF34-035
DX-EMC34-030-L					DX-PHF34-044	DX-PHF34-044
DX-EMC34-055-L					DX-PHF34-073	DX-PHF34-044
DX-EMC34-075-L					DX-PHF34-073	DX-PHF34-073
DX-EMC34-075-L					DX-PHF34-102	DX-PHF34-073
DX-EMC34-100-L					DX-PHF34-102	DX-PHF34-102
DX-EMC34-100-L					DX-PHF34-144	DX-PHF34-102
DX-EMC34-180-L					DX-PHF34-180	DX-PHF34-144
DX-EMC34-180-L					DX-PHF34-217	DX-PHF34-180
DX-EMC34-250-L					DX-PHF34-289	DX-PHF34-217
DX-EMC34-250-L					DX-PHF34-325	DX-PHF34-289
DX-EMC34-400-L					DX-PHF34-433	DX-PHF34-325
DX-EMC34-400-L						DX-PHF34-433
DX-EMC34-750-L						
DX-EMC34-750-L						
DX-EMC34-750-L						
DX-EMC34-750-L						
DX-EMC34-750-L						

2.6 DG1 variable frequency drives up to 630 kW

Assigned switching and protective elements for DG1

Model code	Motor choke @ 110 %	Motor choke @ 150 %	Sine filter @ 110 %	Sine filter @ 150 %	All-pole sine filter @ 110 %	All-pole sine filter @ 150 %
230 V AC, three-phase/230 V AC, three-phase						
DG1-323D7EB-C20C	DX-LM3-008	DX-LM3-008	DX-SIN3-010	DX-SIN3-004	DX-SIN3-006-A	DX-SIN3-004-A
DG1-324D8EB-C20C	DX-LM3-008	DX-LM3-008	DX-SIN3-010	DX-SIN3-010	DX-SIN3-013-A	DX-SIN3-006-A
DG1-326D6EB-C20C	DX-LM3-008	DX-LM3-008	DX-SIN3-010	DX-SIN3-010	DX-SIN3-013-A	DX-SIN3-013-A
DG1-323D7…	DX-LM3-008	DX-LM3-008	DX-SIN3-010	DX-SIN3-004	DX-SIN3-006-A	DX-SIN3-004-A
DG1-324D8…	DX-LM3-008	DX-LM3-008	DX-SIN3-010	DX-SIN3-010	DX-SIN3-013-A	DX-SIN3-006-A
DG1-326D6…	DX-LM3-008	DX-LM3-008	DX-SIN3-010	DX-SIN3-010	DX-SIN3-013-A	DX-SIN3-013-A
DG1-327D8…	DX-LM3-011	DX-LM3-008	DX-SIN3-016	DX-SIN3-010	DX-SIN3-013-A	DX-SIN3-013-A
DG1-32011…	DX-LM3-016	DX-LM3-011	DX-SIN3-016	DX-SIN3-016	DX-SIN3-013-A	DX-SIN3-013-A
DG1-32012…	DX-LM3-035	DX-LM3-016	DX-SIN3-023	DX-SIN3-016	DX-SIN3-024-A	DX-SIN3-013-A
DG1-32017…	DX-LM3-035	DX-LM3-035	DX-SIN3-032	DX-SIN3-023	DX-SIN3-046-A	DX-SIN3-024-A
DG1-32025…	DX-LM3-035	DX-LM3-035	DX-SIN3-032	DX-SIN3-032	DX-SIN3-046-A	DX-SIN3-046-A
DG1-32031…	DX-LM3-050	DX-LM3-035	DX-SIN3-048	DX-SIN3-032	DX-SIN3-065-A	DX-SIN3-046-A
DG1-32048…	DX-LM3-063	DX-LM3-050	DX-SIN3-061	DX-SIN3-048	DX-SIN3-065-A	DX-SIN3-065-A
DG1-32061…	DX-LM3-080	DX-LM3-063	DX-SIN3-090	DX-SIN3-061	DX-SIN3-110-A	DX-SIN3-065-A
DG1-32075…	DX-LM3-100	DX-LM3-080	DX-SIN3-090	DX-SIN3-090	DX-SIN3-110-A	DX-SIN3-110-A
DG1-32088…	DX-LM3-150	DX-LM3-100	DX-SIN3-115	DX-SIN3-090	P: 2 x DX-SIN3-065-A	DX-SIN3-110-A
DG1-32114…	DX-LM3-150	DX-LM3-150	DX-SIN3-150	DX-SIN3-115	P: 2 x DX-SIN3-110-A	P: 2 x DX-SIN3-065-A
DG1-32143…	DX-LM3-180	DX-LM3-150	DX-SIN3-180	DX-SIN3-150	P: 2 x DX-SIN3-110-A	P: 2 x DX-SIN3-110-A
DG1-32170…	DX-LM3-220	DX-LM3-180	DX-SIN3-250	DX-SIN3-180		P: 2 x DX-SIN3-110-A
DG1-32170…	DX-LM3-303	DX-LM3-220	DX-SIN3-480	DX-SIN3-250		
DG1-32248…	DX-LM3-370	DX-LM3-260	DX-SIN3-480	DX-SIN3-250		
400 V AC, three-phase/400 V AC, three-phase						
DG1-342D2EB-C20C	DX-LM3-008	DX-LM3-008	DX-SIN3-004	DX-SIN3-004	DX-SIN3-004-A	DX-SIN3-2D5-A
DG1-343D3EB-C20C	DX-LM3-008	DX-LM3-008	DX-SIN3-010	DX-SIN3-004	DX-SIN3-006-A	DX-SIN3-004-A
DG1-344D3EB-C20C	DX-LM3-008	DX-LM3-008	DX-SIN3-010	DX-SIN3-010	DX-SIN3-006-A	DX-SIN3-006-A
DG1-345D6EB-C20C	DX-LM3-008	DX-LM3-008	DX-SIN3-010	DX-SIN3-010	DX-SIN3-013-A	DX-SIN3-006-A
DG1-342D2…	DX-LM3-008	DX-LM3-008	DX-SIN3-004	DX-SIN3-004	DX-SIN3-004-A	DX-SIN3-2D5-A
DG1-343D3…	DX-LM3-008	DX-LM3-008	DX-SIN3-010	DX-SIN3-004	DX-SIN3-006-A	DX-SIN3-004-A
DG1-344D3…	DX-LM3-008	DX-LM3-008	DX-SIN3-010	DX-SIN3-010	DX-SIN3-006-A	DX-SIN3-006-A
DG1-345D6…	DX-LM3-008	DX-LM3-008	DX-SIN3-010	DX-SIN3-010	DX-SIN3-013-A	DX-SIN3-006-A
DG1-347D6…	DX-LM3-011	DX-LM3-008	DX-SIN3-010	DX-SIN3-010	DX-SIN3-013-A	DX-SIN3-013-A
DG1-349D0…	DX-LM3-016	DX-LM3-011	DX-SIN3-016	DX-SIN3-010	DX-SIN3-013-A	DX-SIN3-013-A
DG1-34012…	DX-LM3-016	DX-LM3-016	DX-SIN3-016	DX-SIN3-016	DX-SIN3-024-A	DX-SIN3-013-A
DG1-34016…	DX-LM3-035	DX-LM3-016	DX-SIN3-023	DX-SIN3-016	DX-SIN3-024-A	DX-SIN3-024-A
DG1-34023…	DX-LM3-035	DX-LM3-035	DX-SIN3-032	DX-SIN3-023	DX-SIN3-046-A	DX-SIN3-024-A
DG1-34031…	DX-LM3-050	DX-LM3-035	DX-SIN3-048	DX-SIN3-032	DX-SIN3-046-A	DX-SIN3-046-A
DG1-34038…	DX-LM3-050	DX-LM3-050	DX-SIN3-048	DX-SIN3-048	DX-SIN3-046-A	DX-SIN3-046-A
DG1-34046…	DX-LM3-063	DX-LM3-050	DX-SIN3-061	DX-SIN3-048	DX-SIN3-065-A	DX-SIN3-046-A
DG1-34061…	DX-LM3-080	DX-LM3-063	DX-SIN3-072	DX-SIN3-061	DX-SIN3-110-A	DX-SIN3-065-A
DG1-34072…	DX-LM3-100	DX-LM3-080	DX-SIN3-090	DX-SIN3-072	DX-SIN3-110-A	DX-SIN3-110-A
DG1-34087…	DX-LM3-150	DX-LM3-100	DX-SIN3-115	DX-SIN3-090	DX-SIN3-110-A	DX-SIN3-110-A
DG1-34105…	DX-LM3-150	DX-LM3-150	DX-SIN3-150	DX-SIN3-115	P: 2 x DX-SIN3-110-A	DX-SIN3-110-A
DG1-34140…	DX-LM3-180	DX-LM3-150	DX-SIN3-180	DX-SIN3-150	P: 2 x DX-SIN3-110-A	P: 2 x DX-SIN3-110-A
DG1-34170…	DX-LM3-220	DX-LM3-180	DX-SIN3-250	DX-SIN3-180		P: 2 x DX-SIN3-110-A
DG1-34205…	DX-LM3-303	DX-LM3-220	DX-SIN3-480	DX-SIN3-250		
DG1-34245…	DX-LM3-370	DX-LM3-260	DX-SIN3-480	DX-SIN3-250		
DG1-34310…	DX-LM3-450	DX-LM3-370	DX-SIN3-480	DX-SIN3-480		
DG1-34385…		DX-LM3-450	DX-SIN3-480	DX-SIN3-480		
DG1-34460…				DX-SIN3-480		
DG1-34520…						
DG1-34590…						
DG1-34650…						
DG1-34730…						
DG1-34820…						
DG1-34920…						
DG1-341K0…						

2.6 DG1 variable frequency drives up to 630 kW

Assigned switching and protective elements for DG1

Model code	power rating 110 %	input current 110 %	output current 110 %	power rating 150 %	input current 150 %	output current 150 %	MCCB Type 1 coordination @ 110 %	Fuse Type 1 coordination @ 110 %	MCCB Type 1 coordination @ 150 %	Fuse Type 1 coordination @ 150 %
575 V AC, three-phase/575 V AC, three-phase										
DG1-353D3…	2.2	4.2	4.5	1.5	3.1	3.3	PKZM0-6,3	C14G8	PKZM0-6,3	C14G8
DG1-354D5…	4	7	7.5	2.2	4.2	4.5	PKZM0-10	C14G10	PKZM0-10	C14G10
DG1-357D5…	5.5	9.3	10	4	7	7.5	PKZM0-12	C14G12	PKZM0-12	C14G12
DG1-35010…	7.5	12.5	13.5	5.5	9.3	10	PKZM0-16	C14G16	PKZM0-16	C14G16
DG1-35013…	11	16.7	18	7.5	12.5	13.5	PKZM0-20	C14G20	PKZM0-20	C14G20
DG1-35018…	15	20.4	22	11	16.7	18	PKZM0-25	C14G25	PKZM0-32	C22G32
DG1-35022…	18.5	25.2	27	15	20.4	22	PKZM0-32	C22G32	PKZM0-32	C22G32
DG1-35027…	22	31.7	34	18.5	25.1	27	PKZM4-40	C22G40	PKZM4-40	C22G40
DG1-35034…	30	38.2	41	22	31.6	34	PKZM4-50	C22G50	PKZM4-50	C22G50
DG1-35041…	37	48.1	52	30	38.1	41	PKZM4-63	C22G63	PKZM4-63	C22G63
DG1-35052…	45	57.4	62	37	48.3	52	NZMC1-A80	80NHG1B-690	NZMC1-A80	80NHG1B-690
DG1-35062…	55	73	80	45	57.6	62	NZMC1-A100	100NHG1B-690	NZMC1-A100	100NHG1B-690
DG1-35080…	75	91.3	100	55	74.4	80	NZMC1-A125	125NHG1B-690	NZMC1-A125	125NHG1B-690
DG1-35100…	90	114.1	125	75	93	100	NZMC1-A160	160NHG1B-690	NZMC1-A160	160NHG1B-690
DG1-35125…	110	132.9	144	90	116.2	125	NZMC1-A160	160NHG1B-690	NZMC2-A200	200NHG1B-690
DG1-35144…	160	202.8	208	110	140.4	144	NZMC2-A250	250NHG1B-690	NZMC2-A250	250NHG1B-690
DG1-35208…	200	243.8	250	160	202.8	208	NZMC2-A300	315NHG3B-690	NZMC3-A400	400NHG3B-690
DG1-35261…	250	272	325	200	223	261	NZMC3-A400	400NHG3B-690	NZMC3-A400	400NHG3B-690
DG1-35325…	315	330	385	250	269	325	NZMC3-A400	400NHG3B-690	NZMC3-A500	500NHG3B-400
DG1-35385…	315	386	416	315	327	385	NZMC3-A500	500NHG3B-400	NZMC3-A500	500NHG3B-400
DG1-35416…	355	415	460	315	382	416	NZMC3-A500	500NHG3B-400	NZMN4-AX630	630NHG4B-690
DG1-35460…	400	477	520	355	433	460	NZMN4-AX630	630NHG3B-400	NZMN4-AX800	800NHG4B-690
DG1-35520…	450	532	590	400	472	520	NZMN4-AX630	630NHG3B-400	NZMN4-AX800	800NHG4B-690
DG1-35590…	500	597	650	450	527	590	NZMN4-AX800	800NHG4B-690	NZMN4-AX800	800NHG4B-690
DG1-35650…	560	653	750	500	591	650	NZMN4-AX800	800NHG4B-690	NZMN4-AX1000	170M6814D
DG1-35820…	630	813	820	500	739	650	NZMN4-AX1000	170M6814D	NZMN4-AX1250	170M8554D

minimum braking resistance	brake resistor, 10 % duty cycle @ 110 %	brake resistor, 20 % duty cycle @ 110 %	brake resistor, 40% duty cycle @ 110 %	brake resistor, 10 % duty cycle @ 150 %	brake resistor, 20 % duty cycle @ 150 %	brake resistor, 40 % duty cycle @ 150 %
100	DX-BR100-600	DX-BR100-1K1	DX-BR100-1K6	DX-BR100-600	DX-BR100-1K1	DX-BR100-1K1
100	DX-BR100-1K1	DX-BR100-1K6	DX-BR100-6K2	DX-BR100-600	DX-BR100-1K1	DX-BR100-1K6
100	DX-BR100-1K1	DX-BR100-6K2	DX-BR100-6K2	DX-BR100-1K1	DX-BR100-1K6	DX-BR100-6K2
30	DX-BR040-3K1	DX-BR040-3K1	DX-BR040-5K1	DX-BR035-1K1	DX-BR040-3K1	DX-BR040-5K1
30	DX-BR040-3K1	DX-BR040-5K1	DX-BR047-9K2	DX-BR040-3K1	DX-BR040-3K1	DX-BR040-5K1
30	DX-BR040-3K1	DX-BR040-5K1	DX-BR047-9K2	DX-BR040-3K1	DX-BR040-5K1	DX-BR047-9K2
18	DX-BR022-5K1	DX-BR022-9K2	P: 2 x DX-BR047-9K2	DX-BR022-5K1	DX-BR022-5K1	DX-BR022-9K2
18	DX-BR022-5K1	DX-BR022-9K2	P: 2 x DX-BR047-9K2	DX-BR022-5K1	DX-BR022-9K2	P: 2 x DX-BR047-9K2
18	DX-BR022-9K2	P: 2 x DX-BR050-5K1	P: 2 x DX-BR047-9K2	DX-BR022-5K1	DX-BR022-9K2	P: 2 x DX-BR047-9K2
9	DX-BR012-9K2	DX-BR012-18K1	P: 3 x DX-BR047-9K2	DX-BR012-9K2	DX-BR012-18K1	DX-BR012-18K1
9	DX-BR012-9K2	DX-BR012-18K1	P: 3 x DX-BR047-9K2	DX-BR012-9K2	DX-BR012-18K1	P: 3 x DX-BR047-9K2
9	DX-BR012-18K1	P: 2 x DX-BR022-9K2	R: 2 x DX-BR006-33K3	DX-BR012-9K2	DX-BR012-18K1	P: 3 x DX-BR047-9K2
7	DX-BR012-18K1	P: 3 x DX-BR022-9K2	R: 4 x DX-BR002-54K3	DX-BR012-18K1	P: 2 x DX-BR022-9K2	R: 2 x DX-BR006-33K3
7	DX-BR012-18K1	R: 2 x DX-BR006-33K3	R: 4 x DX-BR002-54K3	DX-BR012-18K1	P: 3 x DX-BR047-9K2	R: 4 x DX-BR002-54K3
7	P: 3 x DX-BR022-9K2	R: 4 x DX-BR002-54K3	R: 4 x DX-BR002-102K4	DX-BR012-18K1	R: 2 x DX-BR006-33K3	R: 4 x DX-BR002-54K3
2.5	DX-BR006-33K3	P: 2 x DX-BR006-33K3	R: 2 x DX-BR002-102K4	DX-BR006-33K3	P: 2 x DX-BR006-33K3	P: 2 x DX-BR006-33K3
2.5	P: 2 x DX-BR006-18K1	P: 2 x DX-BR006-33K3	on request	DX-BR006-33K3	P: 2 x DX-BR006-33K3	R: 2 x DX-BR002-102K4
2.5	P: 2 x DX-BR006-33K3	R: 2 x DX-BR002-102K4	on request	P: 2 x DX-BR006-18K1	P: 2 x DX-BR006-33K3	on request
2.5	P: 2 x DX-BR006-33K3	on request	on request	P: 2 x DX-BR006-33K3	R: 2 x DX-BR002-102K4	on request
2.5	P: 2 x DX-BR006-33K3	on request	on request	P: 2 x DX-BR006-33K3	on request	on request
2 x 2.5	2 x DX-BR006-33K3	on request	on request	2 x DX-BR006-33K3	on request	on request
2 x 2.5	on request	on request	on request	2 x DX-BR006-33K3	on request	on request
2 x 2.5	on request	on request	on request	on request	on request	on request
2 x 2.5	on request	on request	on request	on request	on request	on request
2 x 2.5	on request	on request	on request	on request	on request	on request
2 x 2.5	on request	on request	on request	on request	on request	on request

Notes R: = mount in series
P: = mount in parallel

2.6 DG1 variable frequency drives up to 630 kW

Assigned switching and protective elements for DG1

Model code	RCD type @ 110 %	RCD type @ 150%	optional mains contactor @110%	optional mains contactor @150%	External EMC filter @ 110 %	External EMC filter @ 150 %
575 V AC, three-phase/575 V AC, three-phase						
DG1-353D3…			DILM7-10(24VDC)	DILM7-10(24VDC)		
DG1-354D5…			DILM7-10(24VDC)	DILM7-10(24VDC)		
DG1-357D5…			DILM7-10(24VDC)	DILM7-10(24VDC)		
DG1-35010…			DILM7-10(24VDC)	DILM7-10(24VDC)		
DG1-35013…			DILM7-10(24VDC)	DILM7-10(24VDC)		
DG1-35018…			DILM17-10(RDC24)	DILM17-10(RDC24)		
DG1-35022…			DILM17-10(RDC24)	DILM17-10(RDC24)		
DG1-35027…			DILM17-10(RDC24)	DILM17-10(RDC24)		
DG1-35034…			DILM40(RDC24)	DILM40(RDC24)		
DG1-35041…			DILM40(RDC24)	DILM40(RDC24)		
DG1-35052…			DILM40(RDC24)	DILM50(RDC24)		
DG1-35062…			DILM72(RDC24)	DILM72(RDC24)		
DG1-35080…			DILM80(RDC24)	DILM95(RDC24)		
DG1-35100…			DILM95(RDC24)	DILM115(RDC24)		
DG1-35125…			DILM115(RDC24)	DILM150(RDC24)		
DG1-35144…			DILM170(RDC24)	DILM170(RDC24)		
DG1-35208…			DILM185A/22(RAC240)	DILM225A/22(RAC240)		
DG1-35261…			DILM225A/22(RAC240)	DILM250/22(RA250)		
DG1-35325…			DILM300A/22(RA250)	DILM400/22(RA250)		
DG1-35385…			DILM400/22(RA250)	DILM400/22(RA250)		
DG1-35416…			DILM400/22(RA250)	DILM500/22(RA250)		
DG1-35460…			DILM500/22(RA250)	DILM500/22(RA250)		
DG1-35520…			DILM500/22(RA250)	DILM580/22(RA250)		
DG1-35590…			DILM580/22(RA250)	DILM580/22(RA250)		
DG1-35650…			DILM580/22(RA250)	DILM750/22(RA250)		
DG1-35820…			DILM750/22(RA250)	DILH1200/22(RAW250)		

External EMC filter (low leakage current) @ 110 %	External EMC filter (low leakage current) @ 150 %	Mains choke @ 110 %	U_K	Mains choke @ 150 %	U_K	passive harmonic filter @ 110 %	passive harmonic filter @ 150 %

2.6 DG1 variable frequency drives up to 630 kW

Assigned switching and protective elements for DG1

Model code	Motor choke @ 110 %	Motor choke @ 150 %	Sine filter @ 110 %	Sine filter @ 150 %	All-pole sine filter @ 110 %	All-pole sine filter @ 150 %
575 V AC, three-phase/575 V AC, three-phase						
DG1-353D3…	DX-LM3-008	DX-LM3-008				
DG1-354D5…	DX-LM3-008	DX-LM3-008				
DG1-357D5…	DX-LM3-011	DX-LM3-008				
DG1-35010…	DX-LM3-016	DX-LM3-011				
DG1-35013…	DX-LM3-035	DX-LM3-016				
DG1-35018…	DX-LM3-035	DX-LM3-035				
DG1-35022…	DX-LM3-035	DX-LM3-035				
DG1-35027…	DX-LM3-035	DX-LM3-035				
DG1-35034…	DX-LM3-050	DX-LM3-035				
DG1-35041…	DX-LM3-063	DX-LM3-050				
DG1-35052…	DX-LM3-063	DX-LM3-063				
DG1-35062…	DX-LM3-080	DX-LM3-063				
DG1-35080…	DX-LM3-100	DX-LM3-080				
DG1-35100…	DX-LM3-180	DX-LM3-100				
DG1-35125…	DX-LM3-180	DX-LM3-150				
DG1-35144…	DX-LM3-220	DX-LM3-150				
DG1-35208…	DX-LM3-260	DX-LM3-220				
DG1-35261…	DX-LM3-370	DX-LM3-303				
DG1-35325…	DX-LM3-450	DX-LM3-370				
DG1-35385…	DX-LM3-450	DX-LM3-450				
DG1-35416…		DX-LM3-450				
DG1-35460…						
DG1-35520…						
DG1-35590…						
DG1-35650…						
DG1-35820…						

Connection examples

Connection example for DG1 with the following functions:
① Setpoint input via external analog setpoint AI2
② Process value feedback via AI1 and PID control

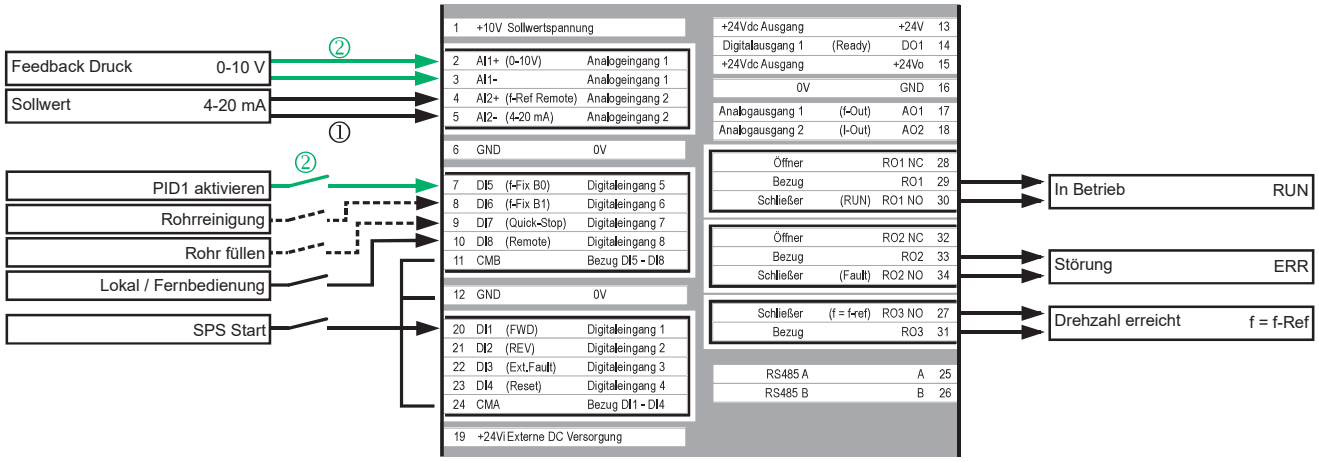

Default
AI1: 0-10V
AI2: 0-20mA

	OFF	ON
AI1	1	
AI2	2	
AI2	3	

Connection example for master-follower operation. The droop function is used ④
The same setpoint input / PID use specifications as for the previous example apply here as well.

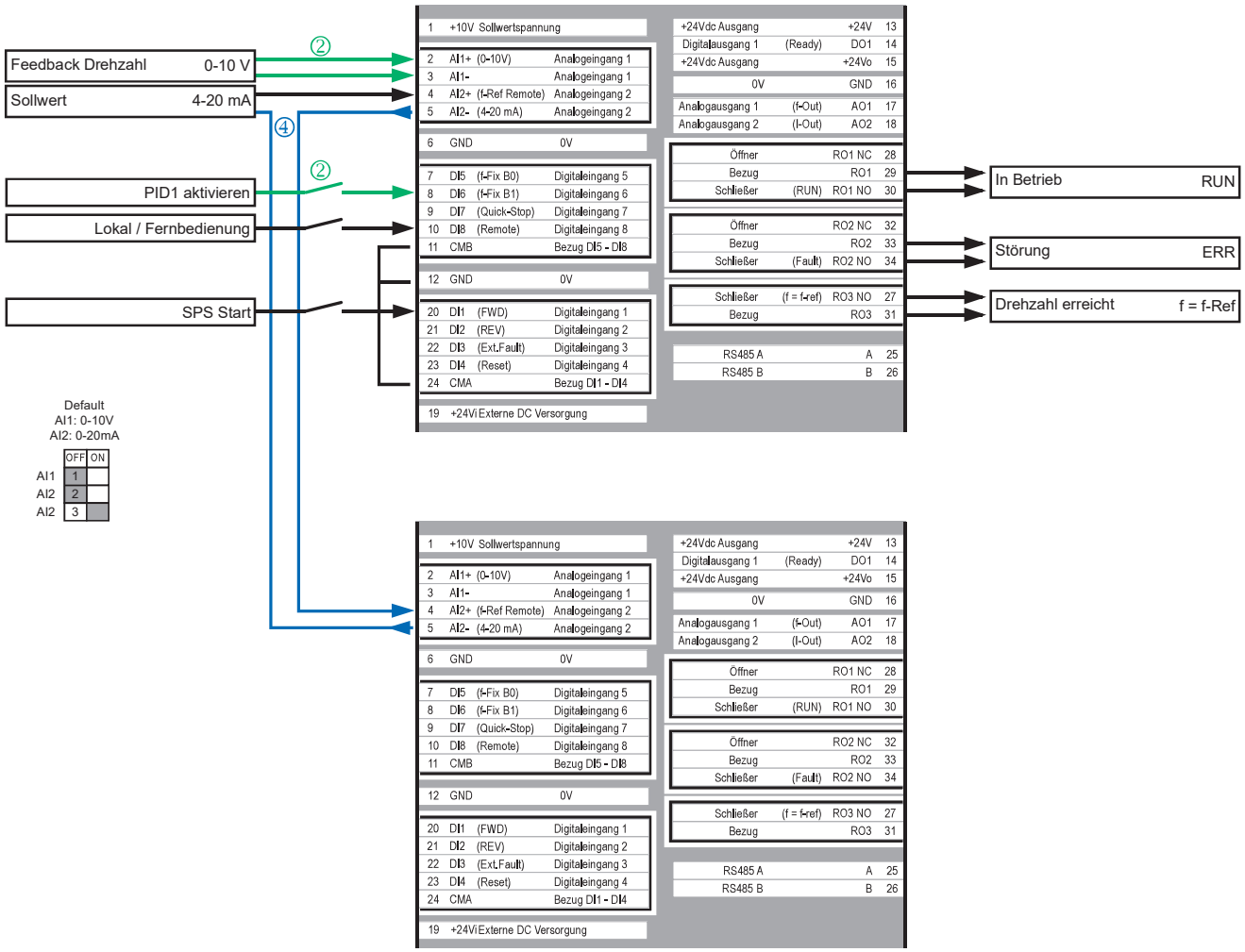

Default
AI1: 0-10V
AI2: 0-20mA

	OFF	ON
AI1	1	
AI2	2	
AI2	3	

Technical specifications

	Unit	Value
General		
Product standard		IEC/EN 61800-2
Production standard		RoHS, ISO 9001
Security		IEC/EN 61800-5, IEC/EN 60950-1: SELF
Radio interference level		IEC/EN 61800-3
Integrated radio interference suppression filter		Yes, C2
Radio interference class (EMC)		C1 (with external filter, for conducted emissions only), C2, C3, depending on the motor cable length, the connected load, and ambient conditions. External radio interference suppression filters (optional) may be necessary.
Radio interference class (EMC), external filters		Optional external radio interference suppression filter for longer motor cable lengths and for use in different EMC environments
Environment (EMC)		1st and 2nd environments as per EN 61800-3
First environment		Yes
Second environment		Yes
Longest permissible length of motor cable with internal filter		C2 ≦ 10 m | C3 ≦ 50 m | DG1-35..: C3 ≦ 10 m
Interference immunity		EN 61800-3:2004+A1-2012, first and second environment
Emissions		EN 61800-3:2004+A1-2012, Category C2
Electrostatic discharge (ESD)		IEC 61000-4-2, 4 kV contact, 8 kV air, Second environment, Criterion B
Fast transients (burst)		IEC 61000-4-4, 2 kV/5 kHz, Second environment, Criterion B
Dielectrical strength		Input to output: 3600 V AC/5100 V DC Input to earth: 2000 V AC/2828 V DC
THD		
((depends on size))		
Acoustic		
Average noise level (cooling fan) sound power level in dB(A)		FR0: 51.7 dB FR1: 51.2 dB FR2: 58.6 dB FR3: 61.0 dB FR4: 68.0 dB FR5: 69.1 dB FR6: 73.2 dB
Noise level		EN 61800-5-1 (2007)
Climatic proofing		< 95%, average relative humidity (RH), non-condensing, non-corrosive
Ambient temperature		
110% overload (1 min./10 min.)	°C	-30 - +40 (max. +55 with 1% derating per Kelvin temperature rise)
150% overload (1 min./10 min.)	°C	-30 - +50 (max. +60 with 1% derating per Kelvin temperature rise)
T_{min}	°C	-30
T_{max}	°C	60
Ambient conditions		IEC 60068-2-60 Test Parameter: Flowing mixed gas corrosion test, Method 1 (H2S [hydrogen sulfide] and SO2 [sulfur dioxide])
Ambient air according to IEC/EN 60721-3-3 ((class beyond EN60721-3-3 is missing))		3C2, 3S2
Storage temperature	°C	-40 up to +70
Altitude		by voltage
Permissible network configurations		TN-S, TN-C, TN-C-S, TT, IT
Mounting position		vertical
Protection type		EN 60529:1992
DG1-…-C21C		IP21 / NEMA Type 1
DG1-…-C54C		IP54 / NEMA Type 12 (keypad required)
Protection against contact		BGV A3 (VBG4, finger- and back-of-hand proof)
Overvoltage category		III
Pollution degree		2
Mechanical shock resistance		EN 61800-5-1, EN 60068-2-27 | UPS drop test (for weights inside the UPS frame) | Storage and transportation: maximum 15 g, 11 ms (inside the packaging)

		Unit	Value
Main circuit			
Rated operating voltage (three-phase)			
DG1-32…		V	208 (-10%) - 240 (+10%)
DG1-34…		V	380 (-10%) - 500 (+10%)
DG1-35…		V	500 (-10%) - 600 (+10%)
Tolerance up		%	10
Tolerance down		%	15
Mains frequency		Hz	50/60
Tolerance		%	10
Mains frequency range		Hz	45 - 66
Mains switch-on frequency			Maximum of one time every 60 seconds
Overload withstand capability			Overload cycle for 60 s every 600 s
I_L (1 min./10 min.)		%	110
I_H (1 min./10 min.)		%	150
Comment			Rated operational current for a standard switching frequency and an ambient temperature of +50 °C for a 150% overload and +40 °C for a 110% overload
Short-time overload withstand capability (2 sec / 20 sec)		%	200
Peak-overload cycle			for 2 seconds every 20 seconds
Output voltage at U_e		V	0 - U_{in}
Integrated DC link choke	u_k	%	5
Rated surge voltage invariability	U_{imp}	µs	1.2/50
Rated insulation voltage U_i		V	
Actuating circuit			
External control voltage	U_c	V	24 V DC (max. 250 mA options incl.)
Permissible residual ripple			
Reference voltage			
Analog input 1 (voltage)		V DC	0 - 10, 2 - 10, variable - 10
Analog input 2 (voltage)		V DC	0 - 10, 2 - 10, variable - 10, -10 - +10, variable negative to variable positive
Analog input 1 and 2 (current)		mA	0 - 20, 4 - 20, variable - 20
Internal reference voltage			10 V DC (max. 10 mA)
Setpoint input (resolution)			
Analog input		%	0.1% (10-bit), accuracy +1%
Keypad input		Hz	0.01
Frequency resolution		Hz	0.01
Variable frequency drive functions			
Ramp times			
Startup		s	0.1 - 3000
Delay		s	0.1 - 3000
Control types			U/f control | Speed control with slip compensation | sensorless vector control (SLV) | torque regulation
Inputs / outputs			
Digital inputs			8, parameterizable, max. 30 V DC
Digital outputs			1, parameterizable, 24 V DC
Analog inputs			2, parameterizable, 0 - 10 V DC, 2 - 10 V DC, -10 - +10 V DC, 0/4 - 20 mA
Analog outputs			2, parameterizable, 0 - 10 V, 0/4 - 20 mA
Relay			3, parameterizable, 2 changeover contacts and 1 N/O, 6 A (240 V AC) / 6 A (24 V DC)
Communication			
On-board			Modbus RTU, Modbus TCP, BACnet MS/TP, Ethernet/IP
Optional			PROFIBUS, CANopen, SmartWire-DT, PROFINET
SmartWire-DT connection			DXG-NET-SWD
Fault current protection			RCD Type B (AC/DC sensitive)
Safety functions			STO (Safe Torque Off, SIL1, PLc Cat 1)
Real time clock			Yes
Plug-in terminal strips			Yes
Keypad (…-C…)			Multi-line LCD keypad, removable, can be installed in remote location
Display			Yes
Keypad			Yes
Variable frequency drive configuration			Variable frequency drive with internal DC link, DC link choke and IGBT inverter
Variable frequency drive type			U converter
Application field			For normal internally and externally ventilated four-pole three-phase asynchronous motors with 1500 rpm at 50 Hz and 1800 rpm at 60 Hz

Dimensions and weights

Sizes FS0 to FS5

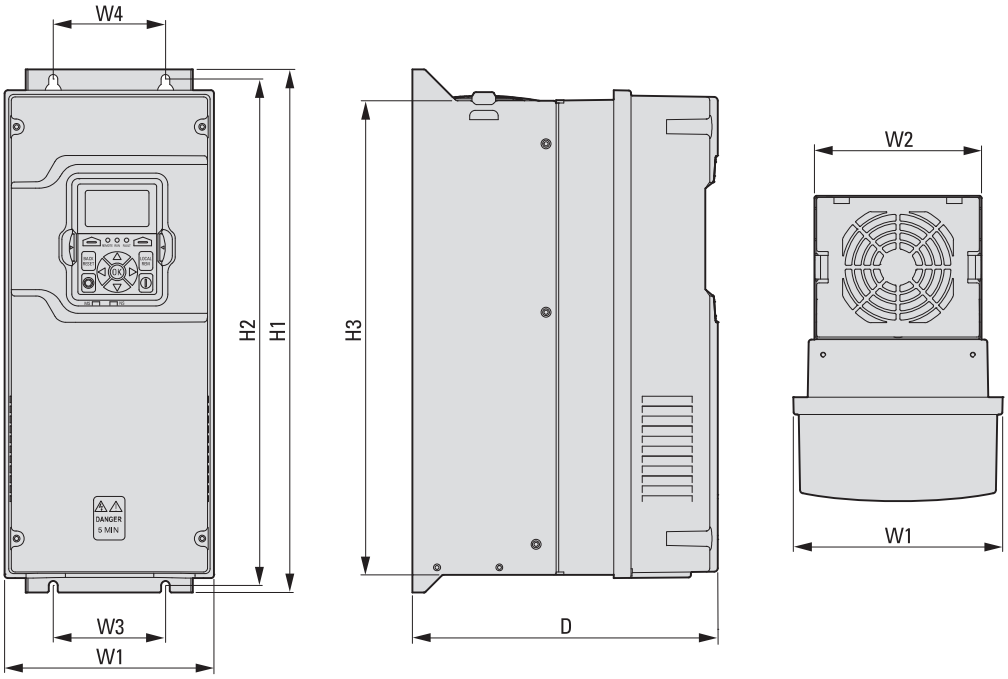

Frame size	D	H1 Chaser light on times	H2 Chaser light on times	H3 Chaser light on times	W1	W2	W3	W4	Ø	Weight
	mm	mm	mm	mm	mm	mm	mm	mm	mm	kg
FR0	173.5	268.7	258.0	242.3	127.0	126.3	108.3	108.3	7.0	2.0
FR1	200.9	327.0	312.0	292.0	153.0	122.0	100.0	100.0	7.0	6.5
FR2	244.7	419.0	406.0	380.0	167.8	134.0	90.0	90.0	7.0	10.6
FR3	265.1	558.0	545.0	518.5	204.6	184.0	125.0	125.0	9.0	22.6
FR4	294.0	630.0	617.5	590.7	237.7	232.0	205.0	205.0	9.0	35.2
FR5	340.7	888.5	753.0	707.0	288.0	282.0	220.0	220.0	9.0	70.0
FR6	371.1	1035.1	845.1	797.1	485.9	480.1	400.1	400.1	9.0	112.0

Frame size FS7, FS8 brake chopper option

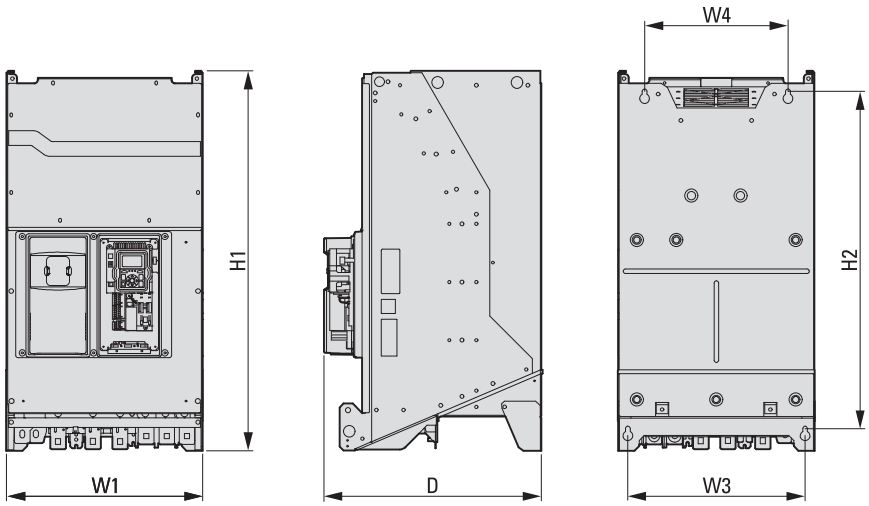

Frame size FS7, FS8 non-brake chopper option

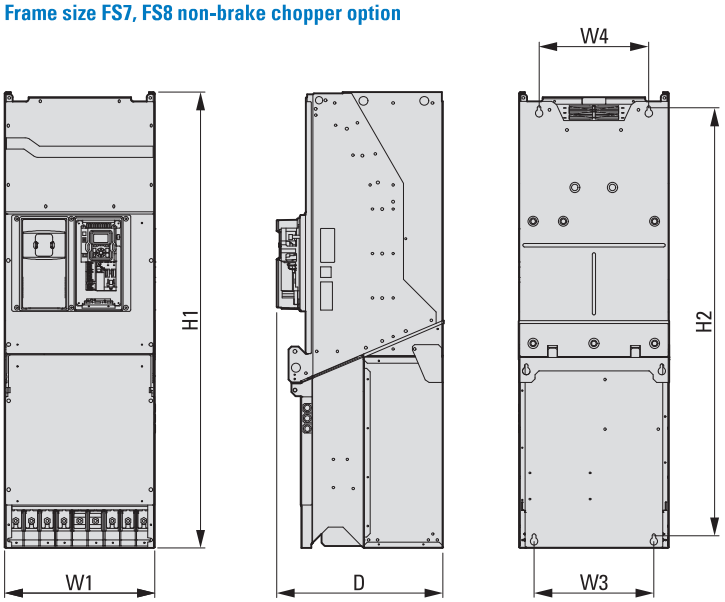

Frame size	D	H1	H2	H3	W1	W2	W3	W4	Ø	Weight kg
FR7	561	980	870	–	506	–	404	370	25	205
FR8	561	980	870	–	506	–	404	370	25	205
FR7/8 with brake chopper	561	1538	1442	–	506	–	404	370	25	410

Note FR8 is 2 FR7 coupled together.