PowerXL™

DA1
Variabe Frequency Drives

Installation Manual



Powering Business Worldwide

All brand and product names are trademarks or registered trademarks of the owner concerned.

Emergency On Call Service
Please call your local representative:
http://www.eaton.eu/aftersales
or
Hotline of the After Sales Service:
+49 (0) 180 5 223822 (de, en)
AfterSalesEGBonn@eaton.com

For customers in US/Canada contact:

EatonCare Customer Support Center

Call the EatonCare Support Center if you need assistance with placing an order, stock availability or proof of shipment, expediting an existing order, emergency shipments, product price information, returns other than warranty returns, and information on local distributors or sales offices.

Voice: 877-ETN-CARE (386-2273) (8:00 a.m. – 6:00 p.m. EST)
After-Hours Emergency: 800-543-7038 (6:00 p.m. – 8:00 a.m. EST)

Drives Technical Resource Center

Voice: 877-ETN-CARE (386-2273) option 2, option 6
(8:00 a.m. – 5:00 p.m. Central Time U.S. [UTC-6])
email: TRCDrives@Eaton.com
www.eaton.com/drives

Original Operating Instructions
The German-language edition of this document is the original operating manual.

Translation of the original operating manual
All editions of this document other than those in German language are translations of the original German manual.

1st published 2012, edition date 10/2012
2nd edition 2016, edition date 01/2016
3rd edition 2016, edition date 11/2016
© 2012 by Eaton Industries GmbH, 53105 Bonn

Production: René Wiegand
Translation: globaldocs GmbH

All rights reserved, including those of the translation.

No part of this manual may be reproduced in any form (printed, photocopy, microfilm or any other process) or processed, duplicated or distributed by means of electronic systems without written permission of Eaton Industries GmbH, Bonn.

Subject to alteration without notice.



Danger!
Dangerous electrical voltage!

Before commencing the installation

- Disconnect the power supply of the device.
- Ensure that devices cannot be accidentally restarted.
- Verify isolation from the supply.
- Earth and short circuit the device.
- Cover or enclose any adjacent live components.
- Follow the engineering instructions (AWA/IL) for the device concerned.
- Only suitably qualified personnel in accordance with EN 50110-1/-2 (VDE 0105 Part 100) may work on this device/system.
- Before installation and before touching the device ensure that you are free of electrostatic charge.
- The functional earth (FE, PES) must be connected to the protective earth (PE) or the potential equalisation. The system installer is responsible for implementing this connection.
- Connecting cables and signal lines should be installed so that inductive or capacitive interference does not impair the automation functions.
- Install automation devices and related operating elements in such a way that they are well protected against unintentional operation.
- Suitable safety hardware and software measures should be implemented for the I/O interface so that an open circuit on the signal side does not result in undefined states in the automation devices.
- Ensure a reliable electrical isolation of the extra-low voltage of the 24 V supply. Only use power supply units complying with IEC 60364-4-41 (VDE 0100 Part 410) or HD384.4.41 S2.
- Deviations of the mains voltage from the rated value must not exceed the tolerance limits given in the specifications, otherwise this may cause malfunction and dangerous operation.
- Emergency stop devices complying with IEC/EN 60204-1 must be effective in all operating modes of the automation devices. Unlatching the emergency-stop devices must not cause a restart.
- Devices that are designed for mounting in housings or control cabinets must only be operated and controlled after they have been installed and with the housing closed. Desktop or portable units must only be operated and controlled in enclosed housings.
- Measures should be taken to ensure the proper restart of programs interrupted after a voltage dip or failure. This should not cause dangerous operating states even for a short time. If necessary, emergency-stop devices should be implemented.
- Wherever faults in the automation system may cause injury or material damage, external measures must be implemented to ensure a safe operating state in the event of a fault or malfunction (for example, by means of separate limit switches, mechanical interlocks etc.).
- Depending on their degree of protection, frequency inverters may contain live bright metal parts, moving or rotating components or hot surfaces during and immediately after operation.
- Removal of the required covers, improper installation or incorrect operation of motor or frequency inverter may cause the failure of the device and may lead to serious injury or damage.
- The applicable national accident prevention and safety regulations apply to all work carried on live frequency inverters.
- The electrical installation must be carried out in accordance with the relevant regulations (e. g. with regard to cable cross sections, fuses, PE).
- Transport, installation, commissioning and maintenance work must be carried out only by qualified personnel (IEC 60364, HD 384 and national occupational safety regulations).
- Installations containing frequency inverters must be provided with additional monitoring and protective devices in accordance with the applicable safety regulations. Modifications to the frequency inverters using the operating software are permitted.
- All covers and doors must be kept closed during operation.
- To reduce the hazards for people or equipment, the user must include in the machine design measures that restrict the consequences of a malfunction or failure of the drive (increased motor speed or sudden standstill of motor). These measures include:
  - Other independent devices for monitoring safety-related variables (speed, travel, end positions etc.).
  - Electrical or non-electrical system-wide measures (electrical or mechanical interlocks).
  - Never touch live parts or cable connections of the frequency inverter after it has been disconnected from the power supply. Due to the charge in the capacitors, these parts may still be live after disconnection. Fit appropriate warning signs.

Table of contents

0	**About this Manual**	**5**
0.1	Target group	5
0.2	List of revisions	5
0.3	Writing conventions	6
0.3.1	Hazard warnings of material damages	6
0.3.2	Hazard warnings of personal injury	6
0.3.3	Tips	6
0.4	Documents with additional information	7
0.5	Abbreviations	7
0.6	Mains supply voltages	8
0.7	Unit of measurement	8
1	**DA1 device series**	**9**
1.1	Introduction	9
1.2	System overview	11
1.3	Checking the Delivery	12
1.4	Rated operational data	14
1.4.1	Rating data on the nameplate	14
1.4.2	Catalog number selection	16
1.4.3	Features	18
1.5	Description	23
1.5.1	Degree of protection IP20 (FS2, FS3)	23
1.5.2	Degree of protection IP20 (FS8)	24
1.5.3	Degree of protection IP55 (FS4, FS5, FS6, FS7)	25
1.5.4	Degree of protection IP66 (FS2, FS3)	26
1.6	Voltage categories	27
1.7	Selection criteria	30
1.8	Output reduction (derating)	32
1.9	Proper use	34
1.10	Maintenance and inspection	35
1.11	Storage	35
1.12	Charging the internal DC link capacitors	36
1.13	Service and warranty	36
2	**Engineering**	**37**
2.1	Introduction	37
2.2	Electrical power network	39
2.2.1	Mains connection and network configuration	39
2.2.2	Mains voltage and frequency	40
2.2.3	Voltage balance	40

2.2.4 Total Harmonic Distortion (THD) 41
2.2.5 Idle power compensation devices 41
2.3 Safety and switching 42
2.3.1 Disconnecting device 42
2.3.2 Fuses 42
2.3.3 Cable cross-sections 43
2.3.4 Residual current circuit-breaker 44
2.3.5 Mains contactors 45
2.3.6 Using a bypass connection 46
2.4 Mains chokes 47
2.5 Radio interference suppression filter 48
2.6 Braking resistances 49
2.7 Motor chokes 52
2.8 Sine filter 53
2.9 Three-phase motor 54
2.9.1 Motor selection 54
2.9.2 Circuit types with three-phase motors 55
2.9.3 Connecting Motors in Parallel 56
2.9.4 Single-phase AC motors 58
2.9.5 Connecting EX motors 58
2.9.6 Synchronous, reluctance, and PM motors 58
2.10 STO function 59
2.10.1 Overview 59
2.10.2 TÜV certification 60
2.10.3 Safety relay specification 60
2.10.4 STO-compatible installation 61
2.10.5 STO function pick-up time 63
2.10.6 STO function parameters 64
2.10.7 Fault messages 67
2.10.8 STO function checklist 67
2.10.9 Regular maintenance 68
2.10.10 "Safe stop" function 68

3 Installation 71
3.1 Introduction 71
3.2 Mounting position 71
3.3 Mounting 72
3.3.1 Mounting position 73
3.3.2 Cooling measures 73
3.3.3 Fixing 77
3.3.4 Control panel installation 80
3.4 IP66/NEMA4X degree of protection 81
3.5 EMC installation 83
3.5.1 EMC compliance in the control panel 83
3.5.2 Earthing 85
3.5.3 Internal filters (EMC and VAR screws) 86

3.5.4 VAR screw ... 87
3.5.5 Screen earth kit ... 87
3.5.6 EMC cable brackets ... 88
3.5.7 General installation diagram ... 89
3.6 Electrical Installation ... 90
3.6.1 Power section connections ... 91
3.6.2 Connection on control section ... 104
3.7 Block diagrams ... 114
3.7.1 DA1-12… ... 115
3.7.2 DA1-32…-A20C, DA1-34…-A20C ... 116
3.7.3 DA1-32…-B55C, DA1-34…-B55C, FS4 frame size ... 117
3.7.4 DA1-32…-B55C, DA1-34…-B55C, FS5, FS6, FS7 frame sizes ... 118
3.7.5 DA1-34370…, DA1-34450… ... 119
3.7.6 DA1-35…-A20C ... 120
3.7.7 DA1-35…-B55C in FS4 ... 121
3.7.8 DA1-35…-B55C in FS5, FS6 ... 122
3.7.9 DA1-12…-B6SC ... 123
3.7.10 DA1-32…-B6SC, DA1-34…-B6SC ... 124
3.7.11 DA1-35…-B6SC ... 125
3.8 Insulation testing ... 126
3.9 Protection against electric shock ... 127

4 Operation ... 129
4.1 Checklist for commissioning ... 129
4.2 Hazard warnings for operation ... 130
4.3 Commissioning with control signal terminals (default settings) ... 131
4.4 Handling the keypad ... 134
4.4.1 Operating unit elements ... 134
4.4.2 Adjust parameters ... 136
4.4.3 Resetting Parameters (RESET) ... 136

5 Fault messages ... 137
5.1 Introduction ... 137
5.1.1 Fault messages ... 137
5.1.2 Acknowledge fault (Reset) ... 137
5.1.3 Fault list ... 138

6 Technical Data ... 143
6.1 General rating data ... 143
6.2 Specific rated operational data ... 147
6.2.1 DA1-12… series ... 147
6.2.2 DA1-32… series ... 148
6.2.3 DA1-34… series ... 151
6.2.4 DA1-35… series ... 154

6.3 Dimensions 157
6.3.1 Frame sizes FS2 and FS3 in IP20 157
6.3.2 Frame sizes FS4 to FS7 in IP55 158
6.3.3 Frame size FS8 in IP20 159
6.3.4 Frame sizes FS2 and FS3 in IP66 160
6.4 Cable cross-sections 161
6.5 Fuses 164
6.6 Mains contactors 168
6.7 Mains chokes 172
6.8 Radio interference suppression filter 176
6.9 Braking resistances 182
6.10 Motor chokes 188
6.11 Sine filter 190
6.12 All-pole sine filters 192

7 Accessories 195
7.1 List of accessories 195

Alphabetical index 197

0 About this Manual

This manual (11/16 MN04020005Z-EN) contains specific information designed to enable you to select and connect a DA1 variable frequency drive. It covers all DA1 frame sizes.

Any differences between and special characteristics of the various models will be noted accordingly. Accessories that can be used to modify the DA1 variable frequency drive according to your specific needs will be listed where applicable.



"Parameter manual"
A separate manual – MN04020006Z-EN ("Parameter Manual") – goes over how to configure the parameters for DA1 variable frequency drives and provides application examples as well. This manual is available on the Eaton website at:

www.eaton.eu/Europe/Electrical/CustomerSupport/DownloadCenter/index.htm → **Customer support → Download Center – Documentation**

In the **Quick Search** box, enter "MN04020006Z".
Then click on **Search**.

0.1 Target group

The content of MN04020005Z-EN manual is written for engineers and electricians. Electrical engineering and physics-related knowledge and skills will be required in order to be able to commission the corresponding devices.

We assume that you have a good knowledge of engineering fundamentals and that you are familiar with handling electrical systems and machines, as well as with reading technical drawings.

0.2 List of revisions

The following significant amendments have been introduced since previous issues:

Publication date	Page	Keyword	New	Modified	Deleted
11/16	66	P1-12 = 12			✓
01/16	–	Manual split into this installation manual (= MN04020005Z-EN) and a parameter configuration manual (= MN04020006Z-EN) as well as revised in general		✓	
	various	Performance expansion up to 250 kW (400 V)	✓		
	various	Rated operating voltages up to 600 V	✓		
	59	STO function (Safe Torque Off)	✓		
10/12		Initial issue			

0.3 Writing conventions

Symbols with the following meaning are used in this manual:

▶ Indicates instructions to be followed.

0.3.1 Hazard warnings of material damages

NOTICE

Warns about the possibility of material damage.

0.3.2 Hazard warnings of personal injury



CAUTION

Warns of the possibility of hazardous situations that may possibly cause slight injury.



WARNING

Warns of the possibility of hazardous situations that could result in serious injury or even death.



DANGER

Warns of hazardous situations that result in serious injury or death.

0.3.3 Tips



Indicates useful tips.



In order to make it easier to understand some of the images included in this manual, the variable frequency drive housing, as well as other safety-relevant parts, has been left out. However, it is important to note that the variable frequency drive must always be operated with its housing in its proper place, as well as with all required safety-relevant parts.



All the specifications in this manual refer to the hardware and software versions documented in it.

0.4 Documents with additional information



More information on the devices described here can be found on the Internet under:

www.eaton.eu/powerxl

as well as

www.eaton.eu/Europe/Electrical/CustomerSupport/DownloadCenter/index.htm
→ Customer support → Download Center – Documentation

In the **Quick Search** box, enter the document name ("MN04020005", for example).

0.5 Abbreviations

The following abbreviations are used in this manual.

DS	Default settings
EMC	Electromagnetic compatibility
FE	Functional earth
FS	Frame Size
FWD	Forward run (clockwise rotating field)
GND	Ground (0-V-potential)
IGBT	Insulated gate bipolar transistor
LED	Light Emitting Diode (LED)
OLED	Organic Light Emitting Diode
PC	Personal Computer
PDS	Power Drive System (magnet system)
PE	Protective earth ⏚
PES	EMC connection to PE for screened lines
PNU	Parameter number
REV	Reverse run (anticlockwise rotation field active)
SCCR	Short Circuit Current Rating
UL	Underwriters Laboratories

0.6 Mains supply voltages

The rated operating voltages stated in the following table are based on the nominal values for networks with a grounded star point.

In ring networks (as found in Europe) the rated operating voltage at the transfer point of the power supply companies is the same as the value in the consumer networks (e.g. 230 V, 400 V).

In star networks (as found in North America), the rated operating voltage at the transfer point of the utility companies is higher than in the consumer network.
Example: 240 V → 230 V, 480 V → 460 V, 600 V → 575 V.

The DA1 variable frequency drive's wide tolerance range takes into account a permissible voltage drop of 10% (i.e. U_{LN} - 10%) while, in the 400-V category, it takes into account the North American mains voltage of 480 V + 10 % (60 Hz).

The permissible power supplies for the DA1 series are listed in the technical data section in the appendix.

The rated mains voltage operational data is always based on mains frequencies of 50/60 Hz within a range of 48 to 62 Hz.

0.7 Unit of measurement

Every physical dimension included in this manual uses international metric system units, otherwise known as SI (Système International d'Unités) units. For the purpose of the equipment's UL certification, some of these dimensions are accompanied by their equivalents in imperial units.

Table 1: Unit conversion examples

Designation	US-American designation	US-American value	SI value	Conversion value
Length	inch	1 in (")	25.4 mm	0.0394
Power	horsepower	1 HP = 1.014 PS	0.7457 kW	1.341
Torque	pound-force inches	1 lbf in	0.113 Nm	8.851
Temperature	Fahrenheit	1 °F (T_F)	-17.222 °C (T_C)	$T_F = T_C \times 9/5 + 32$
Speed	Revolutions per minute	1 rpm	1 min^{-1}	1
Weight	pound	1 lb	0.4536 kg	2.205
Flow rate	cubic feed per minute	1 cfm	1.698 m^3/min	0.5889

1 DA1 device series

1.1 Introduction

Due to their comprehensive functionality and high reliability, PowerXL™ DA1 variable frequency drives are ideal for sophisticated applications involving synchronous or asynchronous three-phase motors.

In fact, DA1 variable frequency drives are characterized by innovative technology and unrivalled reliability that meet the needs of the machine and system-building industry and enable companies to optimize their production and manufacturing processes.

All DA1 variable frequency drives feature an internal brake chopper. In addition, devices belonging to the 230 V (DA1-32…) and 400 V (DA1-34…) voltage classes come with an integrated radio interference suppression filter (EMC).

Moreover, the devices' printed circuit boards are coated in order to provide greater protection against environmental factors.

DA1 devices are characterized by compact and rugged construction, are available in seven frame sizes (FS2 to FS8), and are designed for the following motor output ratings:

- 0.75 (with 230 V) to 11 kW (with 400 V and 500 V) with an IP20 degree of protection and a 7-segment digital display assembly
- 0.75 kW (with 230 V) to 7.5 kW (with 400 V and 500 V) with an IP66 degree of protection and an OLED display – also available in a version with a mains switch and controls for local control
- 5.5 kW (with 230 V) to 90 kW (with 500 V) and 132 kW (with 400 V) with an IP55 degree of protection, an OLED display, and an internal DC link choke in frame sizes FS5, FS6, and FS7
- 200 kW to 250 kW (with 400 V) with an IP20 degree of protection and an OLED display (frame size FS8)

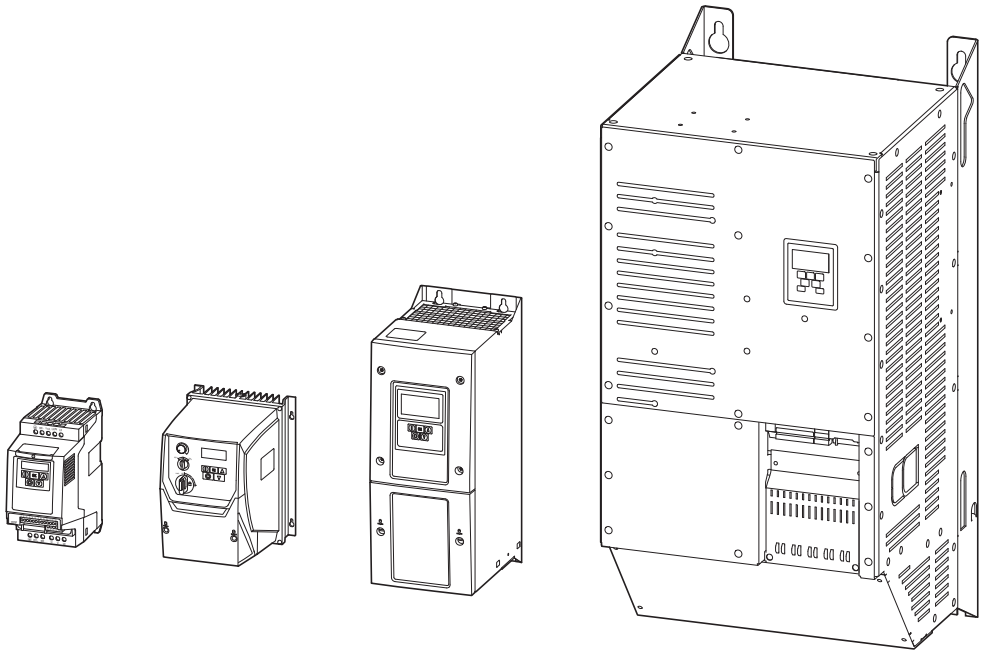

Degree of protection IP20	Degree of protection IP66, with local controls	Degree of protection IP55	Degree of protection IP20 (200 kW, 250 kW)
DA1-…-A20C	DA1-…-B6SC (DA1-…-B66C – without controls)	DA1-…-B55C	DA1-…-B20C

Figure 1: Models and enclosure versions

1.2 System overview

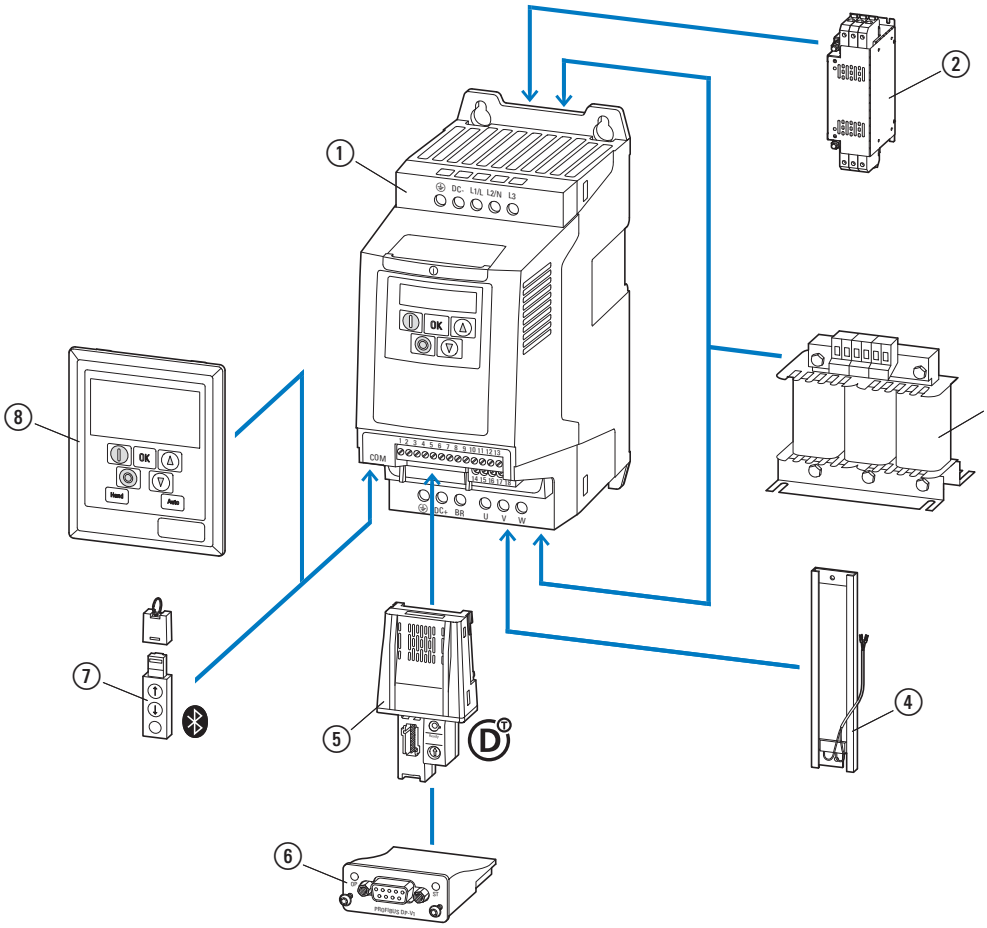

Figure 2: System overview (example: frame size FS2, degree of protection IP20)

① DA1-… variable frequency drives
② DX-LN… mains choke, DX-LM3-… motor choke, DX-SIN3-… sine filter
③ DX-BR… braking resistance
④ DX-NET… fieldbus connection and DXA-EXT… expansion group
⑤ DX-COM-STICK communication module and accessories (e. g. DX-CBL-… connection cable)
⑥ DX-KEY-…keypad (external)

1.3 Checking the Delivery

→ Before opening the package, please check the label on it to make sure that you received the correct variable frequency drive.

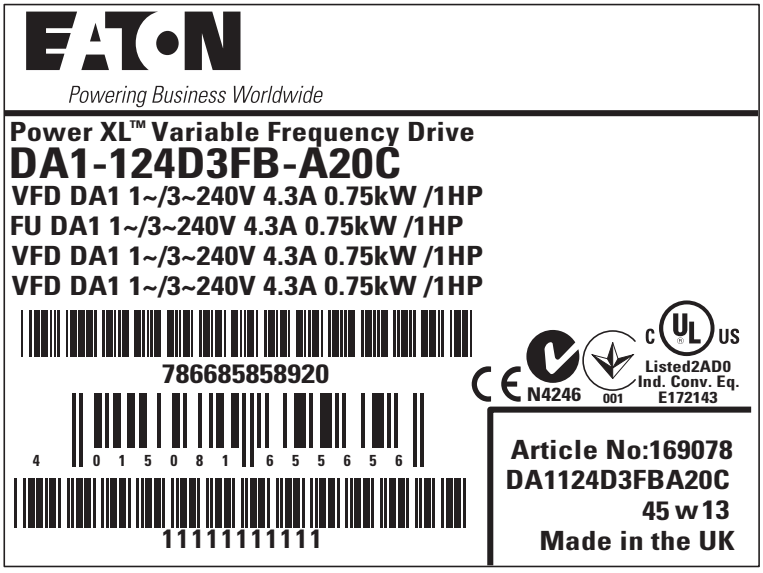

Figure 3: Label (example) on packaging

The sample label shown in figure 3 indicates that the package contains a DA1 variable frequency drive with the following characteristics:

- Single-phase mains connection: 230 V (200 - 240 V ±10 %)
- Rated operational current: 4.3 A
- Assigned motor rating: 0.75 kW/1 HP (at 230 V)

The DA1 series variable frequency drives are carefully packaged and prepared for delivery. The devices should be shipped only in their original packaging with suitable transportation materials. Please take note of the labels and instructions on the packaging, as well as of those meant for the unpacked device.

Open the packaging with suitable tools and inspect the contents immediately after delivery to ensure that they are complete and undamaged.

The packaging must contain the following parts:

- DA1 series variable frequency drive,
- an instruction leaflet
  - IL04020010Z for devices with IP20 degree of protection with frame size FS2, FS3
  - IL04020012Z for devices with IP20 degree of protection with frame size FS8
  - IL04020011Z for devices with IP55 degree of protection with frame size FS4, FS5, FS6, FS7
  - IL04020015Z for devices with IP66 degree of protection with frame size FS2, FS3

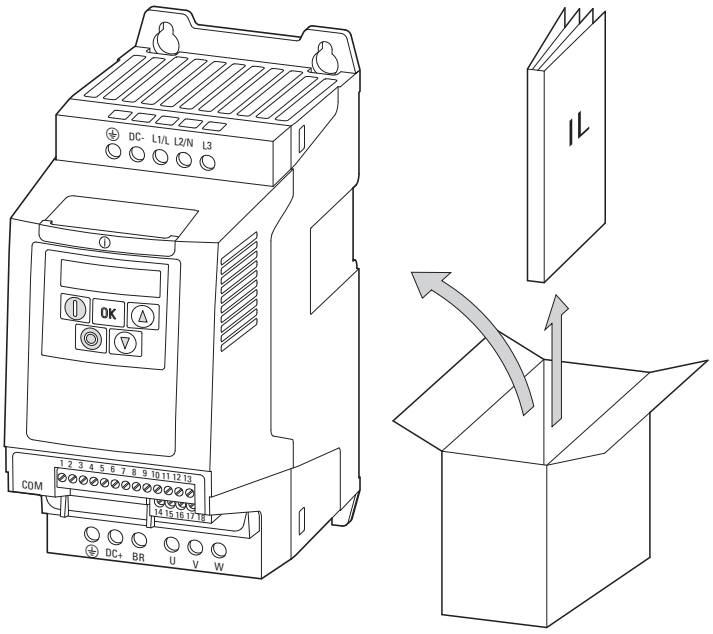

Figure 4: Equipment supplied (example: frame size FS2, degree of protection IP20)

1.4 Rated operational data

1.4.1 Rating data on the nameplate

The device-specific rated operational data for the DA1 variable frequency drive is listed on the nameplate of the device.

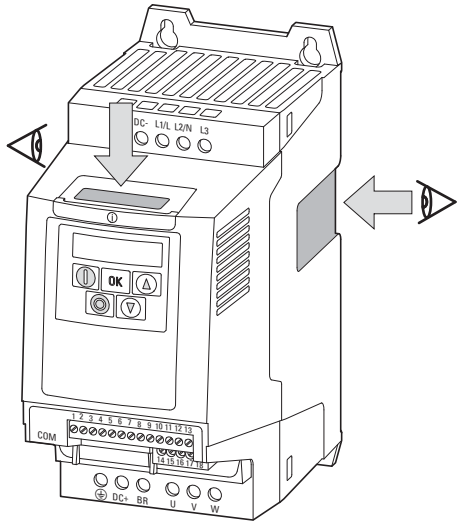

Figure 5: Nameplate on the device (example: frame size FS2, IP20 degree of protection)

The nameplate on top (nameplate ②) is a simplified version that can be used to clearly identify the device if the main nameplate (nameplate ①) is blocked by other devices.

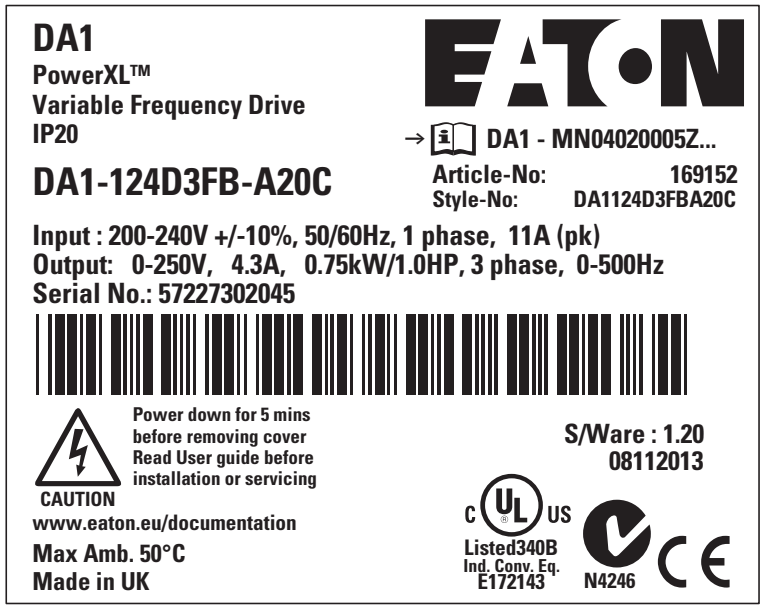

Figure 6: Nameplate ① (on the side)

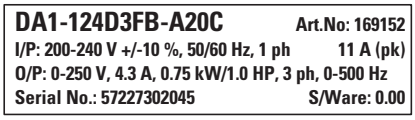

Figure 7: Nameplate ② (on the front)

The inscription of the nameplate has the following meaning (example):

Inscription	Meaning
DA1-124D3FB-A20C	Part no.: DA1 = DA1 series variable frequency drive 1 = Single-phase mains connection / three-phase motor connection 2 = 230 V mains voltage category 4D3 = 4.3 A rated operational current (4-decimal-1, output current) F = Integrated radio interference suppression filter B = Integrated brake chopper A = LED display (7-segment text display) 20 = IP20 degree of protection C = PCB protection (coated board)
Input	Main terminal rating: Single-phase AC voltage (U_e 1~ AC) Voltage 200 - 240 V, frequency 50/60 Hz, input phase current (11 A)
Output	Load side (motor) rating: Three-phase AC voltage (0 - U_e), output phase current (4.3 A), Output frequency (0 - 500 Hz) Assigned motor output: 0.75 kW with 230 V/1 HP with 230 V for a four-pole, internally cooled or surface-cooled three-phase motor (1500 min^{-1} at 50 Hz/1800 rpm at 60 Hz)
Serial No.:	Serial number
IP20	Degree of protection of the housing: IP 20, UL (cUL) Open type
Software	Software version (1.20)
08112013	Manufacturing date: 11-08-2013
Max amb. 50 °C	Maximum permissible ambient air temperature (50 °C)
	Variable frequency drive is an electrical apparatus. Read the manual (in this case MN04020005Z-EN) before making any electrical connections and commissioning.

1.4.2 Catalog number selection

The catalog number selection/part no. for DA1 variable frequency drives is subdivided into three groups

Series – Power section – Model

The following figure shows it in greater detail:

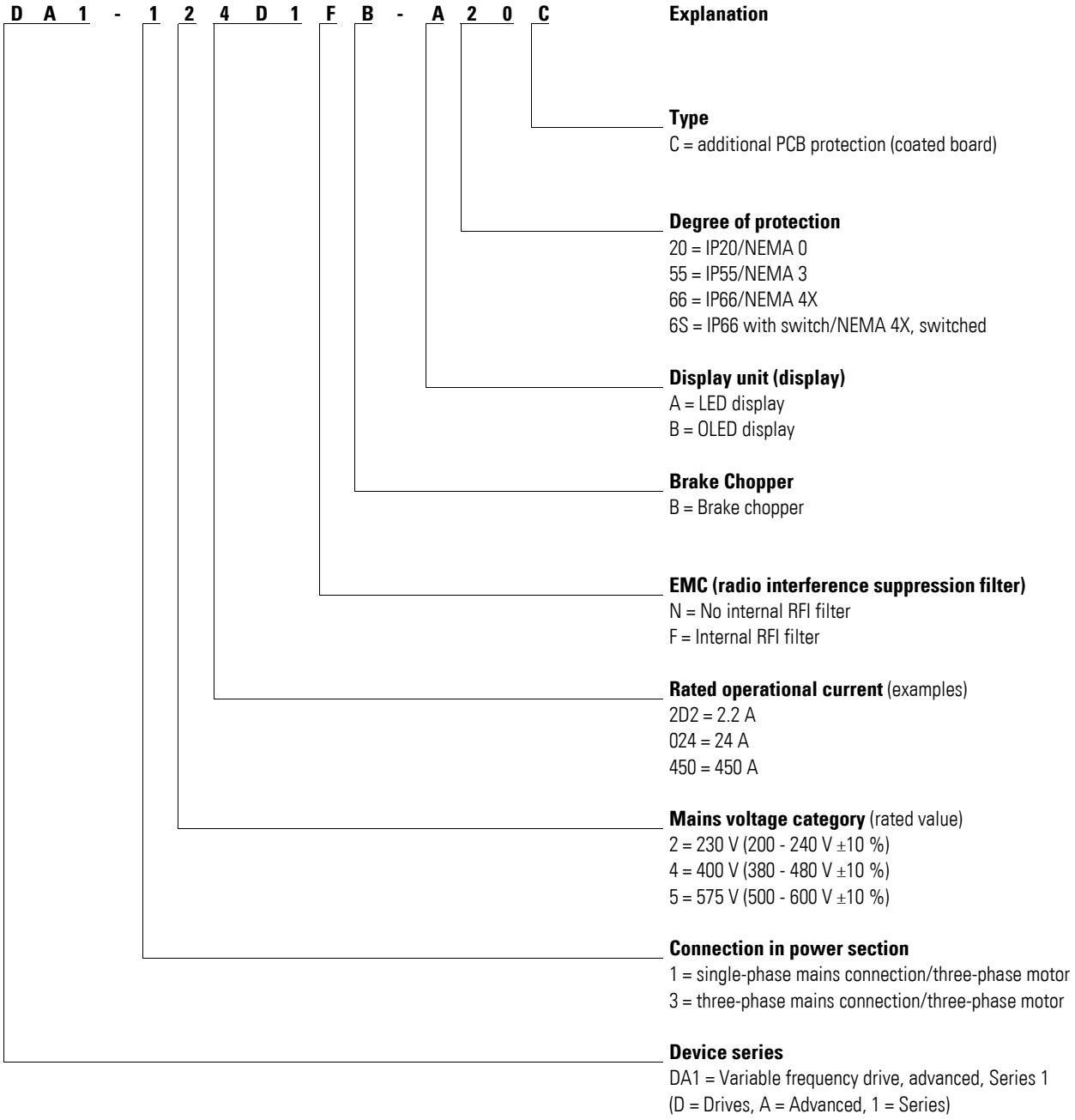

Figure 8: Catalog number selection

Catalog number selection

Inscription	Meaning
DA1-124D3FB-A20C	DA1 = DA1 series variable frequency drive 1 = Single-phase main terminal 2 = Mains voltage category: 230 V (200 V - 240 V ±10 %) 4D3 = Rated operational current: 4.3 A N = Internal radio interference suppression filter B = Internal brake chopper A = LED display 20 = IP20 degree of protection C = PCB protection (coated board)
DA1-327D0FB-A20C	DA1 = DA1 series variable frequency drive 3 = Three-phase main terminal 2 = Mains voltage category: 230 V (200 V - 240 V ±10 %) 7D0 = Rated operational current: 7.0 A N = Internal radio interference suppression filter B = Internal brake chopper A = LED display 20 = IP20 degree of protection C = PCB protection (coated board)
DA1-34014FB-B66C	DA1 = DA1 series variable frequency drive 3 = Three-phase main terminal 4 = Mains voltage category: 400 V (380 V - 480 V ±10 %) 014 = Rated operational current: 14 A N = Internal radio interference suppression filter B = Internal brake chopper B = OLED display 66 = IP66 degree of protection C = PCB protection (coated board)
DA1-35043NB-B55C	DA1= DA1 series variable frequency drive 3 = Three-phase main terminal 5 = Mains voltage category: 575 V (500 V - 600 V ±10 %) 043 = Rated operational current: 43 A N = No internal radio interference suppression filter[1)] B = Internal brake chopper B = OLED display 55 = IP55 degree of protection C = PCB protection (coated board)

1) See following note



For DA1-35…**N**B-… devices, an external radio interference suppression filter is required for operation as per IEC/EN 61800-3.

1.4.3 Features

Mains supply voltage: 1 AC 230 V
Motor connection voltage: 3 AC 230 V, 50/60 Hz

Type	Rated operational current	Assigned motor power (induction motor)		Display (operating unit)	Local controls	Radio interference suppression filter	DC link choke	Degree of protection	Frame size	Brake chopper
	I_e	P[1] (230 V, 50 Hz)	P[2] (220 - 240 V, 60 Hz)					IP	FS	B = Yes
	A	kW	HP							
DA1-124D3FB-A20C	4.3	0.75	1	LED	–	✓	–	IP20	FS2	B
DA1-124D3FB-B66C	4.3	0.75	1	OLED	–	✓	–	IP66	FS2	B
DA1-124D3FB-B6SC	4.3	0.75	1	OLED	✓	✓	–	IP66	FS2	B
DA1-127D0FB-A20C	7	1.5	2	LED	–	✓	–	IP20	FS2	B
DA1-127D0FB-B66C	7	1.5	2	OLED	–	✓	–	IP66	FS2	B
DA1-127D0FB-B6SC	7	1.5	2	OLED	✓	✓	–	IP66	FS2	B
DA1-12011FB-A20C	10.5	2.2	3	LED	–	✓	–	IP20	FS2	B
DA1-12011FB-B66C	10.5	2.2	3	OLED	–	✓	–	IP66	FS2	B
DA1-12011FB-B6SC	10.5	2.2	3	OLED	✓	✓	–	IP66	FS2	B

1) As per IEC standards
2) Quote from "Power Conversion Equipment - UL 508C, May 3, 2002".

Mains supply voltage: 3 AC 230 V, 50/60 Hz
Motor connection voltage: 3 AC 230 V, 50/60 Hz

Type	Rated operational current	Assigned motor power (induction motor)		Display (operating unit)	Local controls	Radio interference suppression filter	DC link choke	Degree of protection	Frame size	Brake chopper
	I_e	P[1] (230 V, 50 Hz)	P[2] (220 - 240 V, 60 Hz)					IP	FS	B = Yes
	A	kW	HP							
DA1-324D3FB-A20C	4.3	0.75	1	LED	–	✓	–	IP20	FS2	B
DA1-324D3FB-B66C	4.3	0.75	1	OLED	–	✓	–	IP66	FS2	B
DA1-324D3FB-B6SC	4.3	0.75	1	OLED	✓	✓	–	IP66	FS2	B
DA1-327D0FB-A20C	7	1.5	2	LED	–	✓	–	IP20	FS2	B
DA1-327D0FB-B66C	7	1.5	2	OLED	–	✓	–	IP66	FS2	B
DA1-327D0FB-B6SC	7	1.5	2	OLED	✓	✓	–	IP66	FS2	B
DA1-32011FB-A20C	10.5	2.2	3	LED	–	✓	–	IP20	FS2	B
DA1-32011FB-B66C	10.5	2.2	3	OLED	–	✓	–	IP66	FS2	B
DA1-32011FB-B6SC	10.5	2.2	3	OLED	✓	✓	–	IP66	FS2	B
DA1-32018FB-A20C	18	4	5	LED	–	✓	–	IP20	FS3	B
DA1-32018FB-B66C	18	4	5	OLED	–	✓	–	IP66	FS3	B
DA1-32018FB-B6SC	18	4	5	OLED	✓	✓	–	IP66	FS3	B
DA1-32024FB-A20C	24	5.5	7.5	LED	–	✓	–	IP20	FS3	B
DA1-32024FB-B55C	24	5.5	7.5	OLED	–	✓	–	IP55	FS4	B
DA1-32030FB-B55C	30	7.5	10	OLED	–	✓	–	IP55	FS4	B
DA1-32046FB-B55C	46	11	15	OLED	–	✓	–	IP55	FS4	B
DA1-32061FB-B55C	61	15	20	OLED	–	✓	✓	IP55	FS5	B
DA1-32072FB-B55C	72	18.5	25	OLED	–	✓	✓	IP55	FS5	B
DA1-32090FB-B55C	90	22	30	OLED	–	✓	✓	IP55	FS6	B
DA1-32110FB-B55C	110	30	40	OLED	–	✓	✓	IP55	FS6	B
DA1-32150FB-B55C	150	37	50	OLED	–	✓	✓	IP55	FS6	B
DA1-32180FB-B55C	180	45	60	OLED	–	✓	✓	IP55	FS6	B
DA1-32202FB-B55C	202	55	75	OLED	–	✓	✓	IP55	FS7	B
DA1-32248FB-B55C	248	75	100	OLED	–	✓	✓	IP55	FS7	B

1) As per IEC standards
2) Quote from "Power Conversion Equipment - UL 508C, May 3, 2002".

Mains supply voltage: 3 AC 400 V, 50 Hz/480 V, 60 Hz
Output voltage: 3 AC 400 V, 50 Hz/440 - 480 V, 60 Hz

Type	Rated operational current	Assigned motor power (induction motor)[1]		Display (operating unit)	Local controls	Radio interference suppression filter	DC link choke	Degree of protection	Frame size	Brake chopper
	I_e	P[1)] (400 V, 50 Hz)	P[2)] (440 - 480 V, 60 Hz)					IP	FS	B = Yes
	A	kW	HP							
DA1-342D2FB-A20C	2.2	0.75	1	LED	–	✓	–	IP20	FS2	B
DA1-342D2FB-B66C	2.2	0.75	1	OLED	–	✓	–	IP66	FS2	B
DA1-342D2FB-B6SC	2.2	0.75	1	OLED	✓	✓	–	IP66	FS2	B
DA1-344D1FB-A20C	4.1	1.5	2	LED	–	✓	–	IP20	FS2	B
DA1-344D1FB-B66C	4.1	1.5	2	OLED	–	✓	–	IP66	FS2	B
DA1-344D1FB-B6SC	4.1	1.5	2	OLED	✓	✓	–	IP66	FS2	B
DA1-345D8FB-A20C	5.8	2.2	3	LED	–	✓	–	IP20	FS2	B
DA1-345D8FB-B66C	5.8	2.2	3	OLED	–	✓	–	IP66	FS2	B
DA1-345D8FB-B6SC	5.8	2.2	3	OLED	✓	✓	–	IP66	FS2	B
DA1-349D5FB-A20C	9.5	4	5	LED	–	✓	–	IP20	FS2	B
DA1-349D5FB-B66C	9.5	4	5	OLED	–	✓	–	IP66	FS2	B
DA1-349D5FB-B6SC	9.5	4	5	OLED	✓	✓	–	IP66	FS2	B
DA1-34014FB-A20C	14	5.5	7.5	LED	–	✓	–	IP20	FS3	B
DA1-34014FB-B66C	14	5.5	7.5	OLED	–	✓	–	IP66	FS3	B
DA1-34014FB-B6SC	14	5.5	7.5	OLED	✓	✓	–	IP66	FS3	B
DA1-34018FB-A20C	18	7.5	10	LED	–	✓	–	IP20	FS3	B
DA1-34018FB-B66C	18	7.5	10	OLED	–	✓	–	IP66	FS3	B
DA1-34018FB-B6SC	18	7.5	10	OLED	✓	✓	–	IP66	FS3	B
DA1-34024FB-A20C	24	11	15	LED	–	✓	–	IP20	FS3	B
DA1-34024FB-B55C	24	11	15	OLED	–	✓	–	IP55	FS4	B
DA1-34030FB-B55C	30	15	20	OLED	–	✓	–	IP55	FS4	B
DA1-34039FB-B55C	39	18.5	25	OLED	–	✓	–	IP55	FS4	B
DA1-34046FB-B55C	46	22	30	OLED	–	✓	–	IP55	FS4	B
DA1-34061FB-B55C	61	30	40	OLED	–	✓	✓	IP55	FS5	B
DA1-34072FB-B55C	72	37	50	OLED	–	✓	✓	IP55	FS5	B
DA1-34090FB-B55C	90	45	60	OLED	–	✓	✓	IP55	FS6	B
DA1-34110FB-B55C	110	55	75	OLED	–	✓	✓	IP55	FS6	B
DA1-34150FB-B55C	150	75	100	OLED	–	✓	✓	IP55	FS6	B
DA1-34180FB-B55C	180	90	125	OLED	–	✓	✓	IP55	FS6	B
DA1-34202FB-B55C	202	110	150	OLED	–	✓	✓	IP55	FS7	B
DA1-34240FB-B55C	240	132	200	OLED	–	✓	✓	IP55	FS7	B

Type	Rated operational current	Assigned motor power (induction motor)[1]		Display (operating unit)	Local controls	Radio interference suppression filter	DC link choke	Degree of protection	Frame size	Brake chopper
	I_e	P[1)] (400 V, 50 Hz)	P[2)] (440 - 480 V, 60 Hz)					IP	FS	B = Yes
	A	kW	HP							
DA1-34302FB-B55C	302	160	250	OLED	–	✓	✓	IP55	FS7	B
DA1-34370FB-B20C[3)]	370	200	300	OLED	–	✓	–	IP20	FS8	B
DA1-34450FB-B20C[3)]	450	250	350	OLED	–	✓	–	IP20	FS8	B

1) As per IEC standards
2) Quote from "Power Conversion Equipment - UL 508C, May 3, 2002".
3) If it is not guaranteed that the system percentage impedance is greater than or equal to 1 %, a mains choke must be connected. Your u_K value should fall between 1 and 4 %.

Examples:
DA1-34370FB-B20C → DX-LN3-370
DA1-34450FB-B20C → DX-LN3-450

Mains supply voltage: 3 AC 500 V, 50 Hz/575 V, 60 Hz
Output voltage: 3 AC 500 V, 50 Hz/550 - 600 V, 60 Hz

Type	Rated operational current	Assigned motor power (induction motor)		Display (operating unit)	Local controls	Radio interference suppression filter	DC link choke	Degree of protection	Frame size	Brake chopper
	I_e	P (500 V, 50 Hz)	P[1] (550 - 600 V, 60 Hz)					IP	FS	B = Yes
	A	kW	HP							
DA1-352D1NB-A20C	2.1	0.75	1	LED	–	–	–	IP20	FS2	B
DA1-352D1NB-B66C	2.1	0.75	1	OLED	–	–	–	IP66	FS2	B
DA1-352D1NB-B6SC	2.1	0.75	1	OLED	✓	–	–	IP66	FS2	B
DA1-353D1NB-A20C	3.1	1.5	2	LED	–	–	–	IP20	FS2	B
DA1-353D1NB-B66C	3.1	1.5	2	OLED	–	–	–	IP66	FS2	B
DA1-353D1NB-B6SC	3.1	1.5	2	OLED	✓	–	–	IP66	FS2	B
DA1-354D1NB-A20C	4.1	2.2	3	LED	–	–	–	IP20	FS2	B
DA1-354D1NB-B66C	4.1	2.2	3	OLED	–	–	–	IP66	FS2	B
DA1-354D1NB-B6SC	4.1	2.2	3	OLED	✓	–	–	IP66	FS2	B
DA1-356D5NB-A20C	6.5	4	5	LED	–	–	–	IP20	FS2	B
DA1-356D5NB-B66C	6.5	4	5	OLED	–	–	–	IP66	FS2	B
DA1-356D5NB-B6SC	6.5	4	5	OLED	✓	–	–	IP66	FS2	B
DA1-359D0NB-A20C	9	5.5	7.5	LED	–	–	–	IP20	FS2	B
DA1-359D0NB-B66C	9	5.5	7.5	OLED	–	–	–	IP66	FS2	B
DA1-359D0NB-B6SC	9	5.5	7.5	OLED	✓	–	–	IP66	FS2	B
DA1-35012NB-A20C	12	7.5	10	LED	–	–	–	IP20	FS3	B
DA1-35012NB-B66C	12	7.5	10	OLED	–	–	–	IP66	FS3	B
DA1-35012NB-B6SC	12	7.5	10	OLED	✓	–	–	IP66	FS3	B
DA1-35017NB-A20C	17	11	15	LED	–	–	–	IP20	FS3	B
DA1-35017NB-B66C	17	11	15	OLED	–	–	–	IP66	FS3	B
DA1-35017NB-B6SC	17	11	15	OLED	✓	–	–	IP66	FS3	B
DA1-35022NB-A20C	22	15	20	LED	–	–	–	IP20	FS3	B
DA1-35022NB-B55C	22	15	20	OLED	–	–	–	IP55	FS4	B
DA1-35028NB-B55C	28	18.5	25	OLED	–	–	–	IP55	FS4	B
DA1-35034NB-B55C	34	22	30	OLED	–	–	–	IP55	FS4	B
DA1-35043NB-B55C	43	30	40	OLED	–	–	✓	IP55	FS5	B
DA1-35054NB-B55C	54	37	50	OLED	–	–	✓	IP55	FS5	B
DA1-35065NB-B55C	65	45	60	OLED	–	–	✓	IP55	FS5	B
DA1-35078NB-B55C	78	55	75	OLED	–	–	✓	IP55	FS6	B
DA1-35105NB-B55C	105	75	100	OLED	–	–	✓	IP55	FS7	B
DA1-35130NB-B55C	130	90	125	OLED	–	–	✓	IP55	FS6	B
DA1-35150NB-B55C	150	110	150	OLED	–	–	✓	IP55	FS7	B

1) Quote from "Power Conversion Equipment - UL 508C, May 3, 2002".

1.5 Description

1.5.1 Degree of protection IP20 (FS2, FS3)

The following drawing serves as an example showing the designations used for the elements in DA1 variable frequency drives with a frame size of FS2 and an IP20 degree of protection.

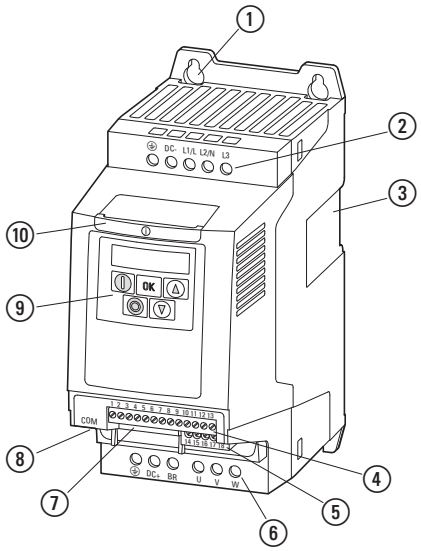

Figure 9: DA1 designations (FS2, IP20)

① Fixing holes (screw fastening)
② Connection terminals in power section (mains side)
③ Cutout for mounting on mounting rail
④ Control terminals (plug-in)
⑤ Relay terminals (plug-in)
⑥ Connection terminals in power section (motor feeder)
⑦ Slot for fieldbus connection or expansion module
⑧ Communication interface (RJ45)
⑨ Operating unit with 5 control buttons and LED display
⑩ Info card

1.5.2 Degree of protection IP20 (FS8)

The following drawing serves as an example showing the designations used for the elements in DA1 variable frequency drives with a frame size of FS8 and an IP20 degree of protection.

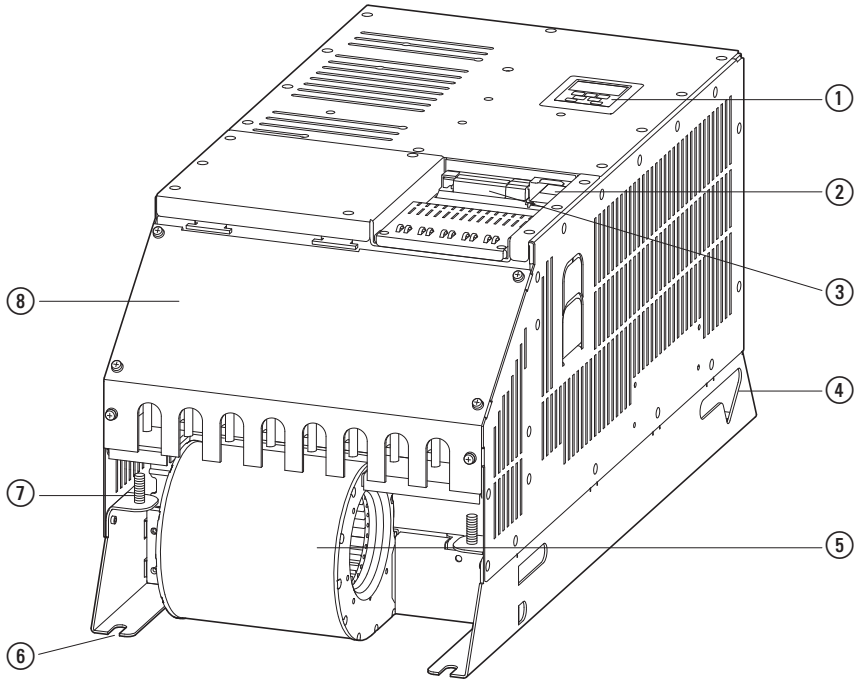

Figure 10:DA1 designations (FS8, IP20)

1. Operating unit with 5 control buttons and OLED display
2. Slot for fieldbus connection or expansion module
3. Control signal terminals and relay terminals (plug-in)
4. Eyebolts
5. Device fan
6. Fixing holes
7. PE terminal bolt
8. Enclosure cover for the connection terminals in the power section

The info cards are located at the back of the enclosure cover.

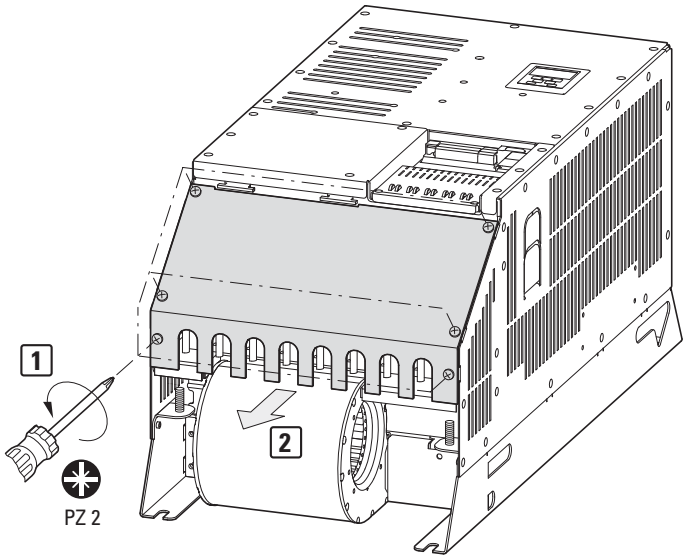

Figure 11:Info cards (back of enclosure cover ⑧)

1.5.3 Degree of protection IP55 (FS4, FS5, FS6, FS7)

The following drawing serves as an example showing the designations used for the elements in DA1 variable frequency drives with a frame size of FS4 and an IP55 degree of protection.

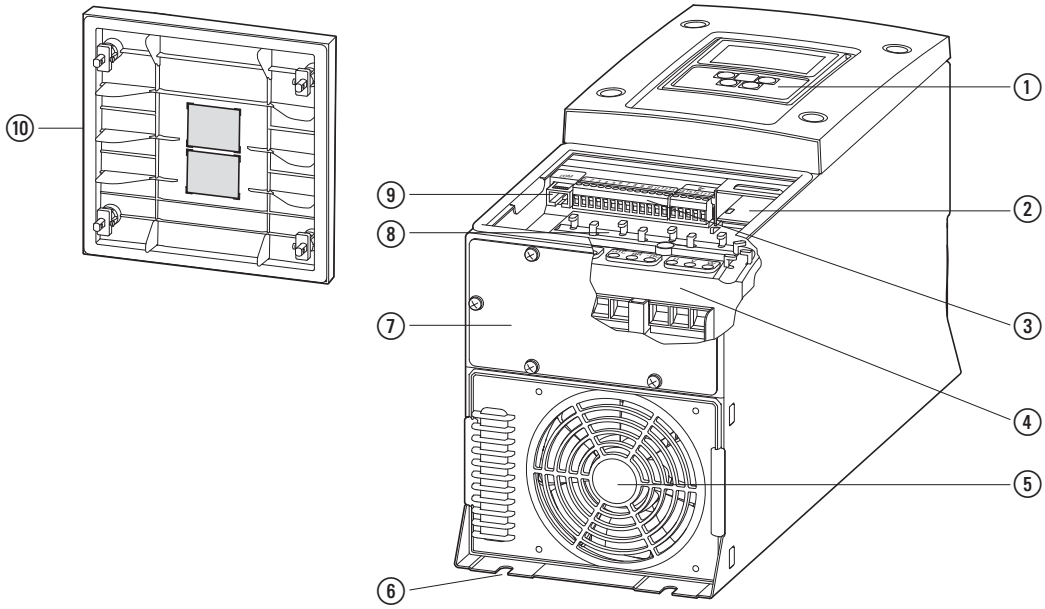

Figure 12:DA1 designations (FS4, IP55)

① Operating unit with 5 control buttons and OLED display
② Slot for fieldbus connection or expansion module
③ Control signal terminals and relay terminals (plug-in)
④ Connection terminals in power section
⑤ Device fan
⑥ Fixing holes
⑦ Blanking plate for installing cable glands for an IP55 degree of protection (without blanking plate: IP40 degree of protection)
⑧ Retainer for the control section connection cables
⑨ Communication interface (RJ45)
⑩ Enclosure cover (connection terminals)

The info card is located inside the lower enclosure cover ⑩ (removed in the figure above).

Blanking plate

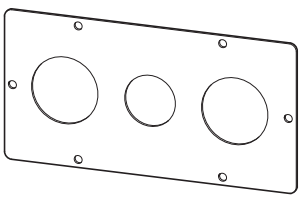

Figure 13:Blanking plate with holes for cable glands (FS4, FS5)

→ The equipment supplied with frame sizes FS4 and FS5 includes an additional blanking plate ⑦ that already has holes for the cable glands.

1.5.4 Degree of protection IP66 (FS2, FS3)

The following drawing serves as an example showing the designations used for the elements in DA1 variable frequency drives with a frame size of FS2 and an IP66 degree of protection.

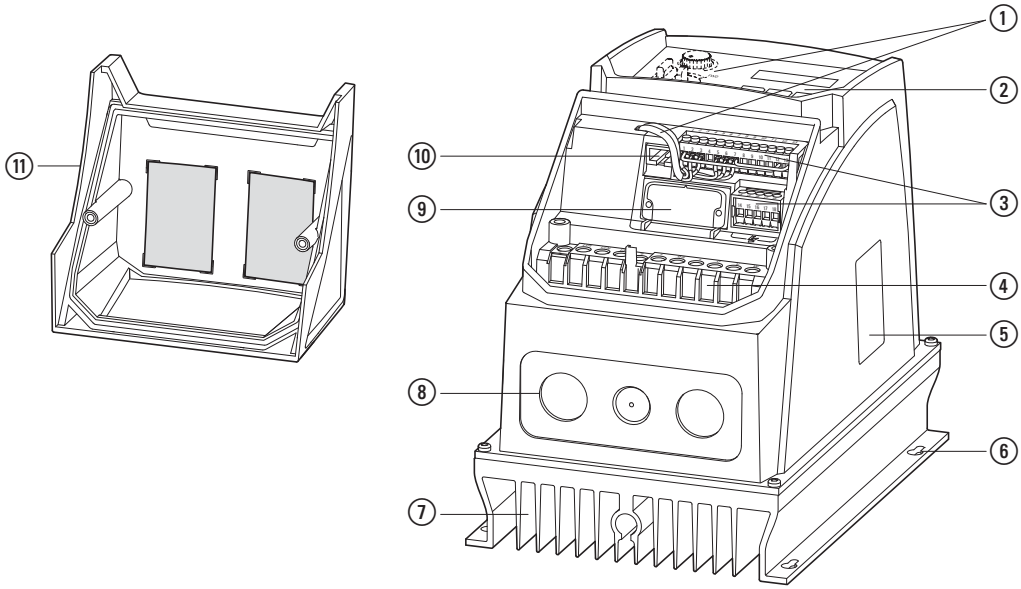

Figure 14:DA1 descriptions (FS2, IP66)

① Local controls on DA1-…-B6SC
② Operating unit with 5 control buttons and OLED display
③ Control and relay terminals (plug-in)
④ Connection terminals in power section
Cableway for EMC cable gland
⑤ Rating plate
⑥ Fixing holes
⑦ Heat sink
⑧ Connection terminals in power section and
Cableway for cable gland
⑨ Slot for fieldbus connection or expansion module
⑩ Communication interface (RJ45)
⑪ Cover

The info cards ⑪ are located inside the lower enclosure cover, which features three knockouts for cable glands to the control section.

1.6 Voltage categories

DA1 variable frequency drives are divided into three voltage categories:

- 200 V: 200 – 240 V ±10 % → DA1-**12**…, DA1-**32**…
- 400 V: 380 – 480 V ±10 % → DA1-**34**…
- 575 V: 500 – 600 V ±10 % → DA1-**35**…

- DA1-**12**…
  - Single-phase mains connection, rated operating voltage 230 V
  - U_{LN} = 1~, 200 - 240 V ±10 %, 50/60 Hz
  - I_e = 4.3 - 11 A
  - Motor: 0.75 - 2.2 kW (230 V, 50 Hz), 1 - 3 HP (230 V, 60 Hz)

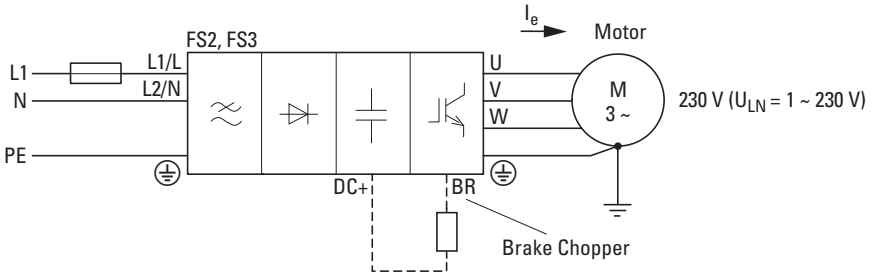

Figure 15:DA1-12…FB-…

- DA1-**32**…
  - Three-phase power supply, rated operating voltage 230 V
  - U_{LN} = 3~, 200 - 240 V ±10 %, 50/60 Hz
  - I_e = 4.3 - 46 A
  - Motor: 0.75 - 11 kW (230 V, 50 Hz), 1 - 15 HP (230 V, 60 Hz)

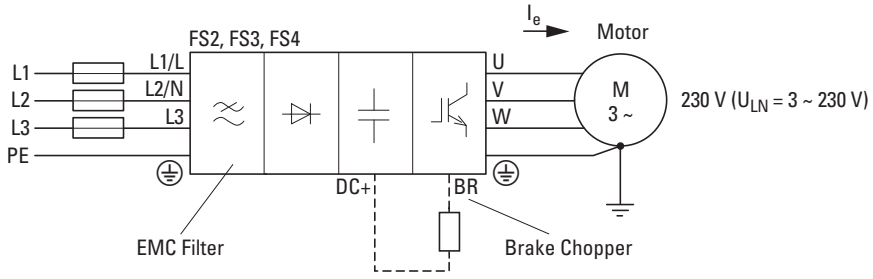

Figure 16:DA1-32…FB-…

  - I_e = 61 - 248 A

- Motor: 15 - 75 kW (230 V, 50 Hz), 20 - 100 HP (230 V, 60 Hz)

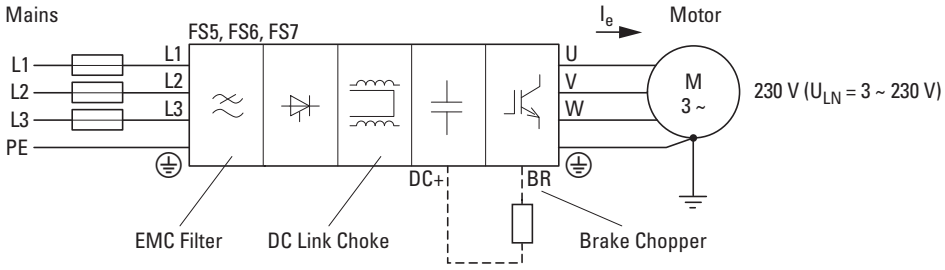

Figure 17:DA1-32…FB-B55C with DC link choke

- DA1-**34**…
  - Three-phase power supply, rated operating voltage 400/480 V
  - U_{LN} = 3~, 380 - 480 V ±10 %, 50/60 Hz
  - I_e = 2.2 - 46 A
  - Motor: 0.75 - 22 kW (400 V, 50 Hz), 1 - 30 HP (460 V, 60 Hz)

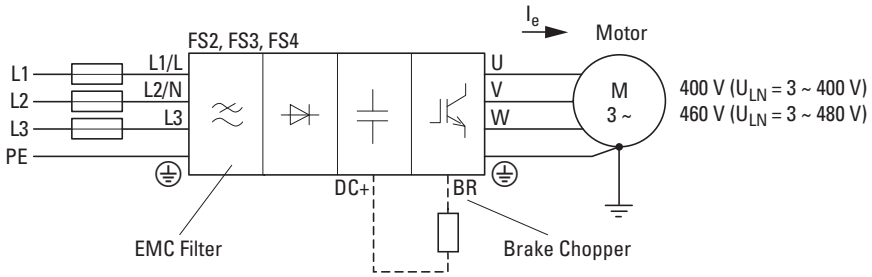

Figure 18:DA1-34…FB-…

- I_e = 61 - 302 A
- Motor: 30 - 160 kW (230 V, 50 Hz), 40 - 250 HP (460 V, 60 Hz)

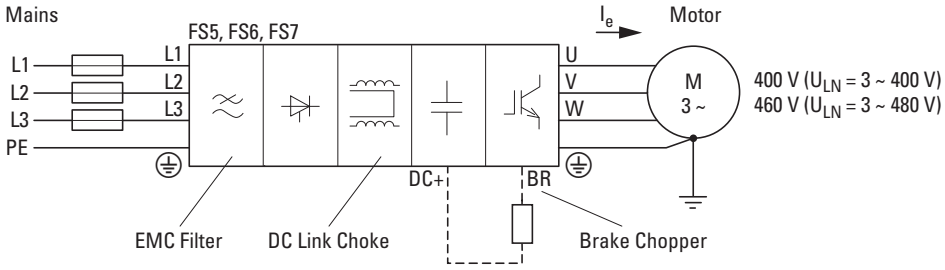

Figure 19:DA1-34…FB-B55C with DC link choke

- I_e = 370 - 450 A
- Motor: 200 - 250 kW (400 V, 50 Hz), 300 - 350 HP (460 V, 60 Hz)

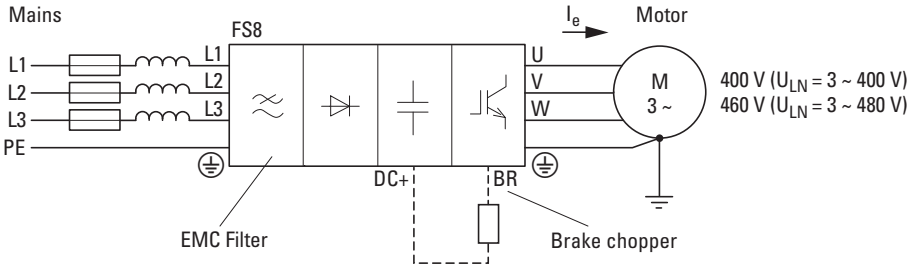

Figure 20:DA1-34…FB-B20C (external mains choke required)

- DA1-**35**…
  - Three-phase power supply, rated operating voltage 500/575 V
  - U_{LN} = 3~, 500 - 600 V ±10 %, 50/60 Hz
  - I_e = 2.1 - 34 A
  - Motor: 1.1 - 22 kW (500 V, 50 Hz), 1.5 - 30 HP (575 V, 60 Hz)

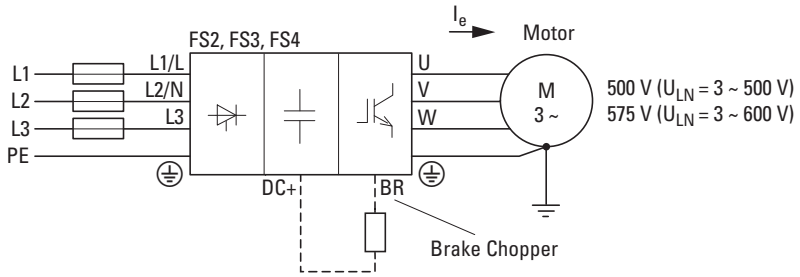

Figure 21:DA1-35…NB-… (without radio interference suppression filter)

- I_e = 43 - 150 A
- Motor: 30 - 110 kW (500 V, 50 Hz), 40 - 150 HP (575 V, 60 Hz)

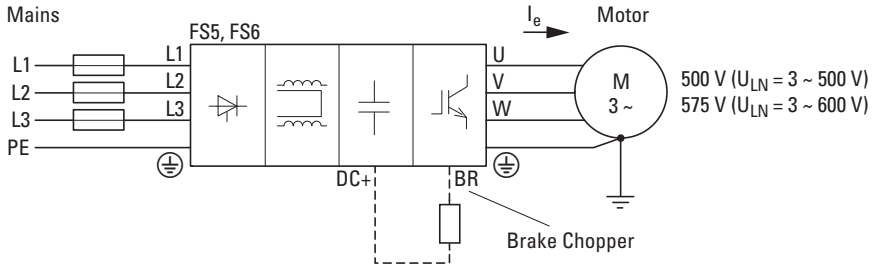

Figure 22:DA1-34…NB-B55C with DC link choke (without radio interference suppression filter)

1.7 Selection criteria

Select the variable frequency drive according to the supply voltage U_{LN} of the supply system and the rated operational current of the assigned motor.
The circuit type (Δ/Y) of the motor must be selected according to the supply voltage.

The variable frequency drive's rated output current I_e must be greater than or equal to the rated motor current.

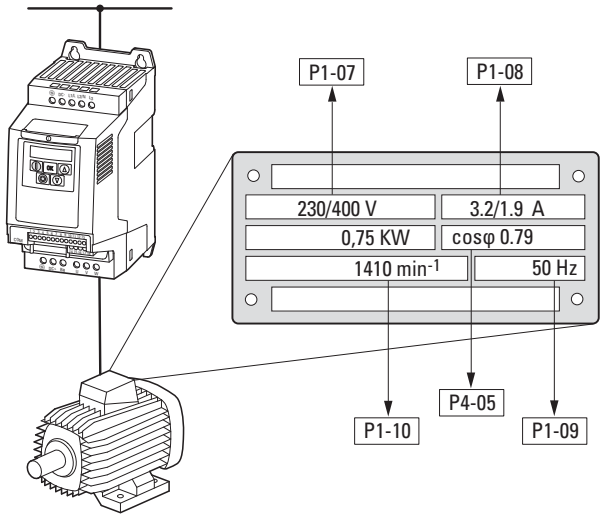

Figure 23:Selection criteria – Rating plate data

When selecting the drive, the following criteria must be known:

- Mains voltage = motor supply voltage (e.g. 3~ 400 V),
- Type of motor (e.g., three-phase asynchronous motor),
- The rated motor current (recommended value – depends on the motor's configuration and on the power supply)
- Ambient conditions: ambient temperature, control cabinet installation with IP20 degree of protection or direct local installation with IP66 degree of protection.

Example based on figure 23

- Mains voltage: 3~ 400 V, 50 Hz
- Star-connected circuit (400 V)
- Rated operational current: 1.9 A (400 V)
- Control panel installation → IP20 degree of protection
- Ambient air temperature max. 50 °C without output reduction, IP20

→ Variable frequency drive that should be selected: DA1-342D2FB-B20C

- DA1-**34**…: 3-phase main terminal, rated operating voltage: 400 V
- DA1-…**2D2**…: 2.2 A – The variable frequency drive's rated operational current (output current) guarantees that the motor will be supplied with the required rated operational current (1.9 A).



When connecting multiple motors in parallel to the output of a variable frequency drive, the motor currents are added geometrically – separated by effective and idle current components.

Accordingly, when selecting a variable frequency drive, make sure to size it in such a way that it will be able to supply the total resulting current. It may be necessary to install motor chokes or sine filters between the variable frequency drive and the motor in order to dampen and compensate for deviating current values.

1.8 Output reduction (derating)

Derating the DA1 variable frequency drive / limiting the maximum continuous output current (I_2) will generally be necessary if, during operation:

- The ambient temperature is higher than 40 °C
- An installation altitude of 1,000 m is exceeded
- The effective switching frequency is higher than the minimum value

The following tables specify the factors that need to be applied when selecting a DA1 variable frequency drive if the drive will be run outside these conditions:

Derating for ambient temperature

Enclosure degree of protection	Maximum ambient temperature without derating	Derate	Maximum permissible ambient air temperature
IP20	50 °C	none	50 °C
IP40[1)]	40 °C	none	40 °C
IP5	40 °C	1.5 % per K	50 °C
IP66	40 °C	2.5 % per K	50 °C

Derating for installation altitude

Enclosure degree of protection	Maximum height without derating	Derate	Maximum permissible altitude as per IEC (UL)
IP20, IP40[1)], IP55, IP66	1000 m	1 % per 100 m	4000 m (2000 m)

Derating for switching frequency

Enclosure degree of protection	Switching frequency (P2-24), setting (audible)[2)]					
	4 kHz	8 kHz	12 kHz	16 kHz	24 kHz	32 kHz
IP20	none	none	20 %	30 %	40 %	50 %
IP40[1)]	none	none	10 %	15 %	25 %	Do not set
IP55	none	10 %	10 %	15 %	25 %	Do not set
IP66	none	10 %	25 %	35 %	50 %	50 %

1) DA1 variable frequency drive with IP55 enclosure and connection area open from below (without blanking plate and cable glands).

2) The pulse frequency's effective rms value will be approximately half the value set with parameter P2-24 (double modulation).

→ For more information on the subject of derating, please refer to application note AP040039EN.

Examples showing how to apply derating factors

4 kW motor (400 V, 8.5 A), installation altitude of 2,000 m above sea level, ambient temperature of 42 °C, switching frequency of 12 kHz.

a)
Selected variable frequency drive: DA1-349D5FB-A20C, rated operational current of 9.5 A, switching frequency of 8 kHz (default setting).

Required derating factors:

- For the 12 kHz switching frequency: **20%**
- For the 2,000 m installation altitude: **10%** (1% per 100 m above 1,000 m, 2,000 m - 1,000 m = 1,000 m, 1,000 m/100 m = 10)
- For the 42 °C ambient temperature: **None**
  (not needed for DA1-349D5FB-A20C, IP20 degree of protection)

9.5 A - 20 % - 10 % = (9.5 x 0.8 x 0.9) A = **6.84 A**

The DA1's permissible continuous rated operational current of 6.84 A is lower than the motor's required rated operational current (8.5 A).
Reducing the pulse frequency to 8 kHz will make it possible to operate the motor continuously at an altitude of 2,000 m (9.5 A - 10% = 8.55 A).

→ Use a variable frequency drive belonging to a higher output class and repeat the calculations in order to ensure that a sufficiently high output current will be available continuously.

b)
Selected variable frequency drive: DA1-34014FB-B55C, rated operational current of 14 A.

Required derating factors:

- For the 12 kHz switching frequency: **10 %**
- For the 2,000 m installation altitude: **10 %** (1 % per 100 m above 1,000 m,
  2,000 m - 1,000 m = 1,000 m, 1,000 m/100 m = 10)
- For the 42 °C ambient temperature: **3 %**
  (1.5 % per kelvin, 42 °C - 40 °C = 2 K, IP55 degree of protection).

14 A - 10 % - 10 % - 3 % = (14 x 0.9 x 0.9 x 0.97) A= approx. **11 A**

The DA1-34014FB-B55C variable frequency drive meets the necessary operating conditions.

1.9 Proper use

The DA1 variable frequency drives are electrical devices for controlling variable speed drives with three-phase motors. They are designed for installation in machines or for use in combination with other components within a machine or system.

The DA1 variable frequency drives are not domestic appliances. They are designed only for industrial use as system components.

If the variable speed starter is installed in a machine, it is prohibited to place it into operation until it has been determined that the corresponding machine meets the safety and protection requirements set forth in Machinery Safety Directive 2006/42/EC (e.g., by complying with EN 60204). The user of the equipment is responsible for ensuring that the machine use complies with the relevant EU Directives.

The CE markings on DA1 variable frequency drives confirm that the devices meet the requirements set forth in the European Union's Low Voltage and EMC Directives (Directives 2006/95/EC, EMC 2004/108/EC and ROHS 2011/65/EU) when used in their typical drive configuration.

In the described system configurations, DA1 variable frequency drives are suitable for use in public and non-public networks.

A connection of a DA1 variable frequency drive to IT networks (networks without reference to earth potential) is permissible only to a limited extent, since the device's built-in filter capacitors connect the network with the earth potential (enclosure).
In unearthed networks, this can result in hazardous situations or damage to the device (insulation monitoring is required!).



To the output (terminals U, V, W) of the DA1 variable frequency drive you must not:

- connect a voltage or capacitive loads (e.g. phase compensation capacitors),
- connect multiple variable frequency drives in parallel
- make a direct connection to the input (bypass).



Always observe the technical data and connection conditions! For additional information, refer to the equipment nameplate or label at the frequency inverter and the documentation.
Any other use will be considered to be an improper use of the device.

1.10 Maintenance and inspection

DA1 variable speed starters are maintenance-free, provided that the general rating data, as well as the technical data for the specific models in use, is observed. Please note, however, that external influences may affect the operation and lifespan of a DA1 variable frequency drive.

We therefore recommend that the devices are checked regularly and the following maintenance measures are carried out at the specified intervals.

Table 2: Recommended maintenance

Maintenance measures	Maintenance interval
Clean cooling vents (cooling slits)	Please enquire
Check that the fan is working properly	6 - 24 months (depending on the environment)
Check the filters in the control panel door (see the manufacturer's specifications)	6 - 24 months (depending on the environment)
Check all earth connections to make sure they are intact	On a regular basis, at periodic intervals
Check the tightening torques of the terminals (control signal terminals, power terminals)	On a regular basis, at periodic intervals
Check connection terminals and all metallic surfaces for corrosion	6 - 24 months; when stored, no more than 12 months later (depending on the environment)
Motor cables and shield connection (EMC)	According to manufacturer specifications, no later than 5 years
Charge capacitors	12 months (→ Section 1.12, „Charging the internal DC link capacitors“)

There are no plans for replacing or repairing individual components of DA1 variable frequency drives.

If an FS2 or FS3 (IP20, IP66) DA1 variable frequency drive is damaged or ruined by external factors, it will not be possible to repair it.
In the case of frame sizes FS4 to FS8, it may be possible for a qualified and certified service center to repair it (→ Section 1.13, „Service and warranty“).

Dispose of the device according to the applicable environmental laws and provisions for the disposal of electrical or electronic devices.

1.11 Storage

If the DA1 variable frequency drive is stored before use, suitable ambient conditions must be ensured at the site of storage:

- Storage temperature: -40 - +60 °C,
- Relative average air humidity: < 95 %, non condensing (EN 50178),
- To prevent damage to the variable speed starter's internal DC link capacitors, it is not recommended to store the variable frequency drive for more than 12 months (→ Section 1.12, „Charging the internal DC link capacitors“).

1.12 Charging the internal DC link capacitors

After extended storage times or extended downtimes during which no power is supplied (> 12 months), the capacitors in the internal DC link must be recharged in a controlled manner in order to prevent damage. To do this, the DA1 variable frequency drive must be supplied with power, with a controlled DC power supply unit, via two mains connection terminals (e.g. L1 and L2).

In order to prevent the capacitors from having excessively high leakage currents, the inrush current should be limited to approximately 300 to 800 mA (depending on the relevant rating). The variable frequency drive must not be enabled during this time (i.e. no start signal). After this, the DC voltage must be set to the magnitudes for the corresponding DC link voltage (U_{DC} ~ 1.41 x U_e) and applied for one hour at least (regeneration time).

- DA1-12…, DA1-32…: about 324 V DC at U_e = 230 V AC
- DA1-34…: about 560 V DC at U_e = 400 V AC
- DA1-35…: about 705 V DC at U_e = 500 V AC

1.13 Service and warranty

In the unlikely event that you have a problem with your DA1 variable frequency drive, please contact your local sales office.

When you call, have the following data ready:

- The exact variable frequency drive part number (see nameplate),
- the date of purchase,
- a detailed description of the problem which has occurred with the variable frequency drive.

If some of the information printed on the rating plate is not legible, please state only the data which are clearly legible.

Information concerning the guarantee can be found in the Terms and Conditions Eaton Industries GmbH.

Break-Down Service

Please contact your local office:

http://www.eaton.eu/aftersales

or

Hotline After Sales Service

+49 (0) 180 5 223822 (de, en)

AfterSalesEGBonn@eaton.com

2 Engineering

2.1 Introduction

This chapter describes the most important features in the energy circuit of a magnet system (PDS = Power Drive System), which you should take into consideration in your project planning.
It contains instructions that must be followed when determining which device to use with which rated motor output, as well as when selecting protection devices and switchgear, selecting cables, cable entries, and operating the DA1 variable frequency drive.
All applicable laws and local standards must be complied with when planning and carrying out the installation. Not following the recommendations provided may result in problems what will not be covered by the warranty.

An example for a magnet system

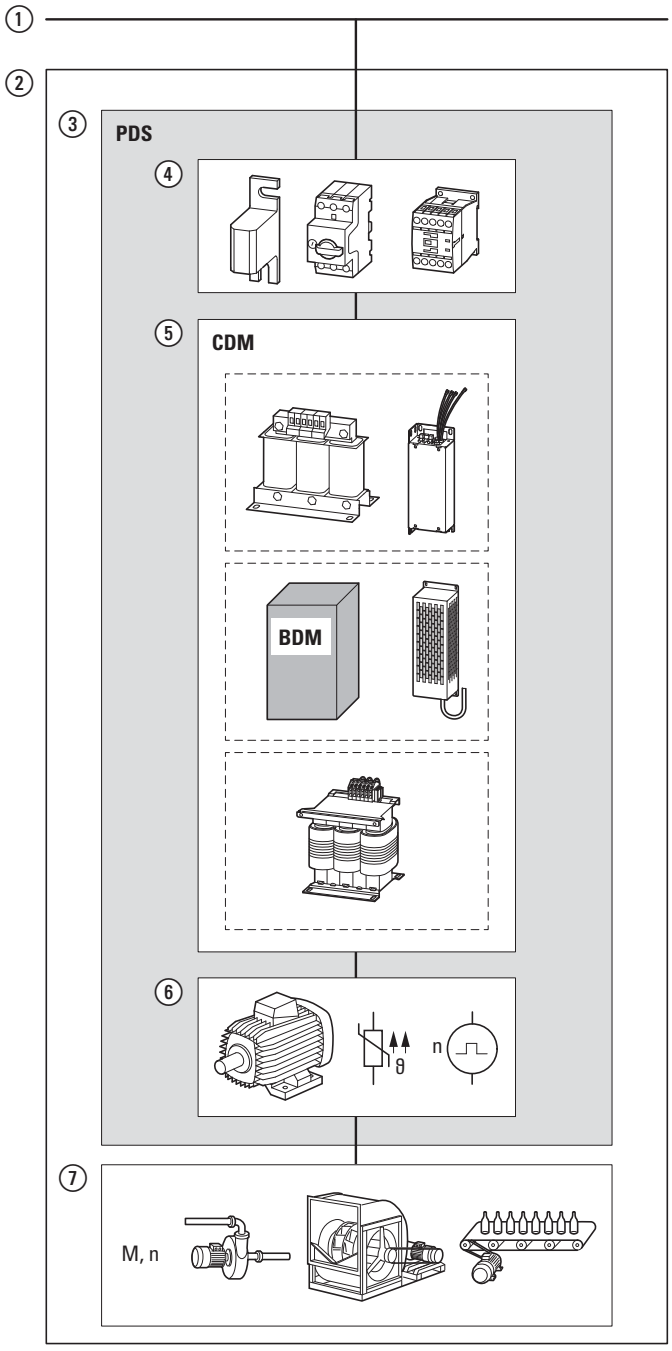

1. Electrical supply system (mains connection, grounding system configuration, mains voltage, frequency, voltage balance, THD, compensation systems)
2. Overall system – consisting of motor and load systems
3. PDS = Power drive system
4. Safety and switching (disconnecting devices, fuses, cable cross-sectional areas, residual current circuit-breakers, mains contactors)
5. CDM = Complete drive module: Variable frequency drive with auxiliary equipment (mains and motor chokes, radio interference suppression filter, brake resistor, sine filter)
   BDM = Basic drive module: DA1 variable frequency drive
6. Motor and sensor (Temperature, motor speed)
7. Load system: Driven system equipment (process, speed, torque)

Figure 24:Magnet system example (overall system as its own system or as part of a larger system)

2.2 Electrical power network

2.2.1 Mains connection and network configuration

DA1 variable frequency drives can be connected to and run on all neutral point-grounded AC supply systems (TN-S, TN-C, TT grounding systems – please refer to IEC 60364) without any limitations.

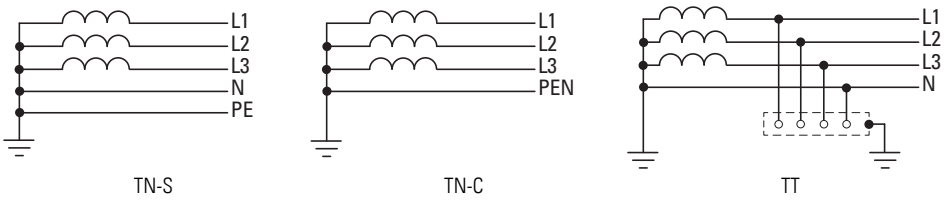

Figure 25:AC supply systems with earthed center point

→ While planning the project, consider a symmetrical distribution to the three main phase conductors, if multiple variable frequency drives with single-phase supplies are to be connected.
The total current of all single-phase consumers is not to cause an overload of the neutral conductor (N-conductor).

The connection and operation of variable frequency drives to asymmetrically grounded TN networks (phase-grounded delta network "Grounded Delta", USA) or non-grounded or high-resistance grounded (over 30 Ω) IT networks is only conditionally permissible (internal radio interference suppression filters).

→ Operation on non-earthed networks (IT) requires the use of suitable insulation monitors (e.g. pulse-code measurement method).

→ In networks with an earthed main pole, the maximum phase-earth voltage must not exceed 300 V AC.

DA1-…-A20C variable frequency drives with an FS2 or FS3 frame size can be connected to corner-grounded systems or IT grounding systems (not grounded, insulated). The internal radio interference suppression filter must be disabled in these cases.

→ Generally speaking, measures designed to ensure electromagnetic compatibility are required in drive systems in order to ensure compliance with the applicable regulations in the EMC and Low Voltage Directives.

Good earthing measures are a prerequisite for the effective insert of further measures such as screen earth kit or filters here. Without respective grounding measures, further steps are superfluous.

DA1-35… (500 - 600 V) devices do not feature a radio interference suppression filter and can be connected to corner-grounded systems and IT grounding systems.

2.2.2 Mains voltage and frequency

The standardized rated operating voltages (IEC 60038, VDE 017-1) of power utilities guarantee the following conditions at the connection point:

- Deviation from the rated value of voltage:
  maximum ±10 %
- Deviation in voltage phase balance:
  maximum ±3 %
- Deviation from rated value of the frequency:
  maximum ±4 %

The broad tolerance band of the DA1 variable frequency drive considers the rated value for
European as (EU: U_{LN} = 230 V/400 V, 50 Hz) and
American as (USA: U_{LN} = 240 V/480 V, 60 Hz) standard voltages:

- 230 V, 50 Hz (EU) and 240 V, 60 Hz (USA) at DA1-12…, DA1-32…
  200 V -10 % - 240 V +10 % (180 V -0 % - 264 V +0 %)
- 400 V, 50 Hz (EU) and 480 V, 60 Hz (USA) at DA1-34…
  380 V -10 % - 480 V +10 % (342 V -0 % - 528 V +0 %)
- 500 V, 50 Hz (EU) and 575 V, 60 Hz (USA) at DA1-35…
  500 V -10 % - 600 V +10 % (450 V -0 % - 660 V +0 %)

The permissible frequency range for all voltage categories is 50/60 Hz (48 Hz - 0 % - 62 Hz + 0 %).

2.2.3 Voltage balance

Unbalanced voltages and deviations from the ideal voltage shape may occur in three-phase AC supply systems if the conductors are loaded unevenly and if large output loads are connected directly. These supply voltage unbalances may cause the diodes in the variable frequency drive's rectifier bridge converter to be loaded unevenly, resulting in premature diode failure.



In the project planning for the connection of three-phase supplied variable frequency drives (DA1-3…), consider only AC supply systems that handle permitted asymmetric divergences in the mains voltage ≦ +3 %.

If this condition is not fulfilled, or symmetry at the connection location is not known, the use of an assigned main choke is recommended.

2.2.4 Total Harmonic Distortion (THD)

The THD value (THD = Total Harmonic Distortion) is defined in standard IEC/EN 61800-3 as the ratio of the rms value of all harmonic components to the rms value of the fundamental frequency.



In order to reduce the THD value (up to 30 %), it is recommended to use a DX-LN… mains choke (→ Section 2.4, „Mains chokes“, page 47).



FS5, FS6, and FS7 DA1 variable frequency drives feature chokes in their DC link. Using mains chokes in order to reduce current harmonics is not necessary in this case.



Only for FS8 DA1 variable frequency drives:
DA1-34370FB-B20C, DA-34450FB-B20C

If it is not guaranteed that the system percentage impedance is greater than or equal to 1 %, a mains choke must be connected. Your u_K value should fall between 1 and 4 %.

Examples:
DA1-34370FB-B20C → DX-LN3-370
DA1-34450FB-B20C → DX-LN3-450

2.2.5 Idle power compensation devices

Compensation on the power supply side is not required for the variable frequency drives of the DA1 series. From the AC supply system they only take on very little reactive power of the fundamental harmonics (cos φ ~ 0.98).



In the AC supply systems with non-choked reactive current compensation devices, current deviations can enable parallel resonance and undefinable circumstances.

In the project planning for the connection of variable frequency drives to AC supply systems with undefined circumstances, consider using main chokes.

2.3 Safety and switching

2.3.1 Disconnecting device



Install a manual disconnecting device between the mains connection and the DA1 variable frequency drive. This disconnecting device must be designed in such a way that it can be interlocked in its open position for installation and maintenance work.

In the European Union, this disconnecting device must be one of the following devices in order to comply with European Directives as per standard EN 60204-1, "Safety of machinery":

- An AC-23B utilization category disconnector (EN 60947-3)
- A disconnector with an auxiliary contact that in all cases will disconnect the load circuit before the disconnector's main contacts open (EN 60947-3)
- A circuit-breaker designed to disconnect the circuit as per EN 60947-2

In all other regions, the applicable national and local safety regulations must be complied with.

2.3.2 Fuses

The DA1 variable frequency drive and the corresponding supply cables must be protected from thermal overload and short-circuits.



The fuse ratings and cable cross-sectional areas (wire gauges) for the connection on the mains side will depend on the DA1 variable frequency drive's input current I_{LN}.



For the recommended fuse sizing and assignments, please refer to → Section 6.5, „Fuses“, page 164.

The fuses will protect the supply cable in the event of a short-circuit, limit any damage to the variable frequency drive, and prevent damage to upstream devices in the event of a short-circuit in the variable frequency drive.

2.3.3 Cable cross-sections

The mains cables and motor cables must be sized as required by local standards and by the load currents that will be involved.

The PE conductor's cross-sectional area must be the same as the phase conductors' cross-sectional area. The connection terminals marked with ⏚ must be connected to the earth-current circuit.

> *NOTICE*
> The specified minimum PE conductor cross-sections (EN 61800-5-1) must be maintained.

If there are leakage currents greater than 3.5 mA, a reinforced earthing (PE) must be connected, as required by standard EN 61800-5-1. The cable cross-section must be at least 10 mm^2, or the earthing system must consist of two separately connected earthing cables.



→ Section 6.2, „Specific rated operational data", page 147 provides the leakage currents for the individual models.



→ Section 3.5, „EMC installation", page 83 goes over the EMC requirements for the motor cables.

A symmetrical, fully screened (360°), low-impedance motor cable must be used. The length of the motor cable depends on the RFI class and the environment.

For US installations, UL-listed fuses, fuse bases, and cables (AWG) should be used exclusively. These cables must have a temperature rating of 70 °C (158 °F), and will often require installation inside a metal conduit (please consult the applicable local standards).



For the rated cable cross-sectional areas for DA1 variable frequency drives, please refer to the technical data chapter in → Section 6.4, „Cable cross-sections", page 161.

2.3.4 Residual current circuit-breaker

When using variable frequency drives (DA1-3…) that work with a three-phase power supply (L1, L2, L3), make sure to use type B AC/DC sensitive residual current devices exclusively.

When using variable frequency drives that work with a single-phase power supply (L, N) (DA1-12…), you may use type A and type B residual current devices (RCD).

> *NOTICE*
>
> Residual current circuit-breakers (RCD = residual current device) should only be installed between the power feed system (the AC supply system supplying power) and the DA1 variable frequency drive – not at the output to the motor!

The leakage currents' magnitude will generally depend on:

- length of the motor cable,
- shielding of the motor cable,
- height of the pulse frequency (switching frequency of the inverter),
- Design of the radio interference suppression filter
- grounding measures at the site of the motor.

Other protective measures against direct and indirect contact can be used for DA1 variable frequency drives, including isolating them from the supply system with the use of a transformer.

2.3.5 Mains contactors

The mains contactor enables an operational switching on and off of the supply voltage for the variable frequency drive and switching off in case of a fault. The mains contactor is designed based on the mains-side input current I_{LN} of the DA1 variable frequency drive for utilization category AC-1 (IEC 60947) and the ambient air temperature at the location of use.

→ The mains contactors listed here are based on the variable frequency drive's rated input-side mains current I_{LN} without an external mains choke.
The contactor should be selected based on thermal current $I_{th} = I_e$ (AC-1) at the specified ambient air temperature.

NOTICE

The inching operation is not permissible via the mains contactor (Pause time ≧ 30 s between switching off and on).

→ For UL-compliant installation and operation, the mains side switching devices must allow for a 1.25 times higher input current.

→ For the rated mains contactors for DA1 variable frequency drives, please refer to the technical data chapter in
→ Section 6.6, „Mains contactors“, page 168.

2.3.6 Using a bypass connection

WARNING

Never connect the DA1 variable frequency drive's output terminals U, V, and W to the power feed system (L1, L2, L3)! Connecting the mains voltage to the output terminals can result in the variable frequency drive being irreparably damaged.

If a bypass is required, use mechanically linked switches or contactors or electrically interlocked contactors in order to ensure that the motor terminals will not be simultaneously connected to the mains connection and to the variable frequency drive's output terminals.

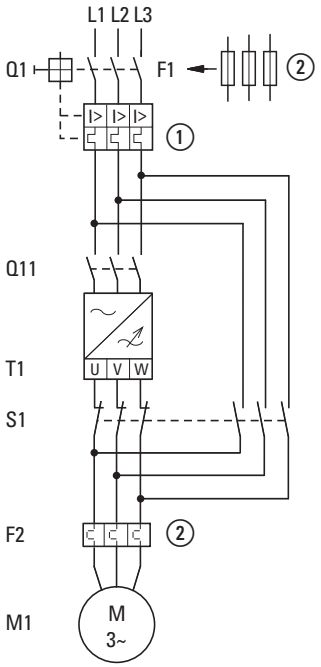

① Q1 thermal overload and short-circuit protection
② F1 fuse and F2 overload relay (alternative to ①)
Q1 Mains contactor
T1 DA1 variable frequency drive
S1 Interlocked switching between variable frequency drive and bypass
F2 Motor protection (overload relay, alternative to ①)
M1 Three-phase motor

Figure 26:Bypass motor control (example)

2.4 Mains chokes

Mains chokes reduce the total harmonic distortion, the mains feedback and improve the power factor. The apparent current on the mains side is then reduced by around 30 %.

Towards the variable frequency drive, the main chokes dampen the interference from the supply network. This increases the electric strength of the variable frequency drive and lengthens the lifespan (diodes of the mains power rectifier, internal DC link capacitors).

→ It is not necessary to use mains chokes in order to run the DA1 variable frequency drive. However, we recommend using a mains choke if the electrical supply system's quality is not known.

While planning the project, consider that a main choke is only assigned to a single variable frequency drive for decoupling.

When using an adapting transformer (assigned to a single variable frequency drive), a main choke is not necessary.

Main chokes are designed based on the mains-side input current (I_{LN}) of the variable frequency drive.

→ FS5, FS6, and FS7 DA1 variable frequency drives feature mains chokes in their DC link. Using chokes in order to reduce current harmonics is not necessary in this case.

→ Only for FS8 DA1 variable frequency drives:
DA1-34370FB-B20C, DA-34450FB-B20C

If it is not guaranteed that the system percentage impedance is greater than or equal to 1%, a mains choke must be connected. Your u_K value should fall between 1 and 4%.

Examples:
DA1-34370FB-B20C → DX-LN3-370
DA1-34450FB-B20C → DX-LN3-450

→ When the frequency inverter is operating at its rated current limit, the mains choke with a u_K value of around 4 % causes a reduction of the frequency inverter's maximum possible output voltage (U_2) to about 96 % of the mains voltage (U_{LN}).

→ For the rated mains contactors for DA1 variable frequency drives, please refer to the technical data chapter in
→ Section 6.7, „Mains chokes“, page 172.

→ For more information and technical data on DX-LN… mains chokes, please refer to instruction leaflet IL00906003Z.

2.5 Radio interference suppression filter

DA1-12…FB-…, DA1-32…FB-…, and DA1-34…FB-… variable frequency drives feature an internal radio interference suppression filter. In combination with a motor cable that is earthed and screened 360° on both ends, they make it possible to comply with the sensitive EMC limits of category C1 in the 1st environment (IEC/EN 61800-3) when there is conducted interference. This requires installation in accordance with EMC requirements, as well as not exceeding permissible motor cable lengths.

The standard motor cable lengths are as follows:

- 1 m for category C1 in the 1st environment
- 5 m for category C2 in the 1st and 2nd environments
- 25 m for category C3 in the 2nd environment

Longer motor cable lengths can be used if additional, external radio interference suppression filters (DX-EMC…) are used. For more information, please refer to the following tables.

Additional measures used to reduce EMC limits and use longer motor cable lengths are possible in combination with motor chokes and sine filters.

DA1-35…NB-… devices do not feature an internal radio interference suppression filter. DX-EMC34… radio interference suppression filters can be connected upstream in order to run these devices on a three-phase mains voltage of 500 V.

Please enquire for radio interference suppression filters for higher mains voltages.



In the case of power drive systems (PDS) with variable frequency drives, electromagnetic compatibility (EMC) measures must already be taken into account during the engineering stage, as making changes during assembly and installation and retroactively fixing things will be more expensive.



The maximum unscreened cable length between the radio interference suppression filter and the variable frequency drive should not exceed 300 to 500 mm (depending on the DA1 variable frequency drive's frame size).



For the rated radio interference suppression filters for DA1 variable frequency drives, please refer to the technical data chapter in → Section 6.8, „Radio interference suppression filter", page 176.

2.6 Braking resistances

In certain operating states, the motor may run as a generator in certain applications (regenerative braking operation).

Examples include:

- Lowering in hoisting gear and conveyor applications
- Controlled speed reduction in the case of large load inertias (flywheels)
- A fast speed reduction in dynamic travel drives

When the motor operates as a generator, its braking energy will be fed into the variable frequency drive's DC link via the inverter. DC link voltage U_{DC} will be increased as a result. If the voltage value is too high, the DA1 variable frequency drive will disable its inverter, after which the motor will coast uncontrolled.
If there is a braking chopper and a connected braking resistance R_B, the braking energy fed back into the variable frequency drive can be dissipated in order to limit the DC link voltage.

DA1-…B-… variable frequency drives feature an integrated braking chopper. The brake resistors are connected to the internal braking transistor with terminals DC+ and BR so that they will be connected in parallel to the DC link. In addition to this, the braking chopper must be enabled using parameter P1-05 (= 2 or = 3). The braking chopper will be switched on automatically if the braking energy being fed back causes the DC link voltage to increase to the switch-on voltage's magnitude.

Device series	Main terminal	Voltage class	Braking chopper on	Braking chopper off
DA1-12…	Single-phase	230 V	390 V	378 V
DA1-32…	Three-phase	230 V	390 V	378 V
DA1-34…	Three-phase	400 V	780 V	756 V
DA1-35…	Three-phase	575 V	975 V	945 V

For example, in the case of DA1-34… variable frequency drives, the braking chopper will be switched on at a DC link voltage of approximately 780 VDC and then back off at 756 VDC. During this stage, the braking transistor and the brake resistor will be active continuously. In order to protect against a thermal overload, parameter P6-19 can be used to set resistance value R_B and parameter P6-20 can be used to set rated power P_{DB} for the brake resistor.

It is often difficult to specify a suitable brake resistor for specific applications. This is due to the fact that not all of the application conditions required for sizing will be available when the engineering stage starts. Because of this, and as a simplification, brake resistors are instead usually classified for two load groups:

- **Low duty**: Low load with short braking duration and low duty factor (up to about 25 %), e.g., for horizontal conveyors and handling equipment for bulk cargo and general cargo, end carriages, sliding doors, and turbomachinery (centrifugal pumps, fans).
- **High duty**: High load with long braking duration and high duty factor (at least 30 %), e.g., for elevators, downhill conveyors, winders, centrifuges, flywheel motors, and large fans.

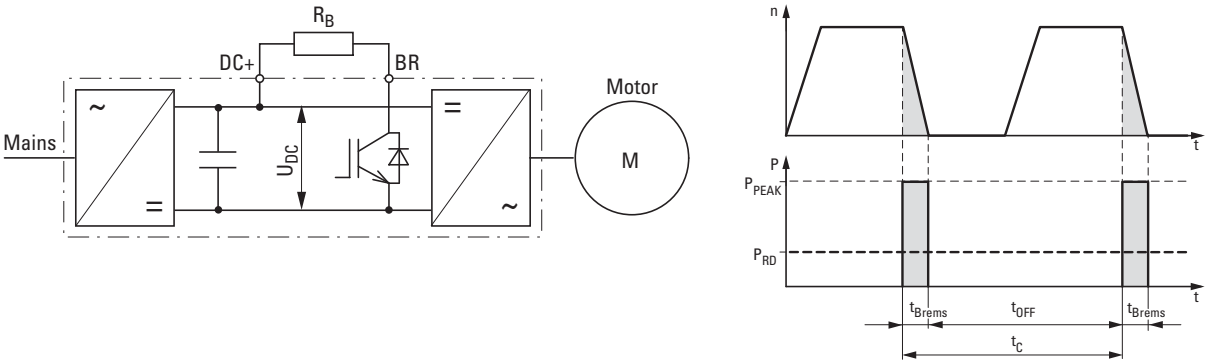

Figure 27:Braking cycle, fast motor stop with external brake resistor

Selecting brake resistors

Brake resistors are selected based on continuous power dissipation P_{DB} and maximum peak pulse power P_{Peak}. The brake resistor must be adequate for both powers.

The maximum pulse power is defined by the braking torque – kinetic energy W_{kin} during braking – that is fed back by the motor during braking. A simplified method that can be used is to take the variable frequency drive's braking power P_{max} or the rated motor output and use it as peak pulse power P_{Peak} for sizing purposes, since the mechanical braking power will be reduced by the motor's and inverter's efficiency.

$$P_{Peak} \sim P_{max} = \frac{1}{2} \times \frac{W_{kin}}{t_{Brakin}} \quad g$$

The required rated power / continuous rating for braking resistance P_{DB} is calculated using braking energy W_{kin} and cycle time t_C:

$$P_{DB} = \frac{W_{kin}}{t_C}$$

If the kinetic energy is not known, you will need the ratio of braking time $t_{Braking}$ to cycle time t_C:

$$DF[\%] = \frac{t_{Brakin}}{t_C} \quad g \times 100\ \%$$

The required continuous rating for a duty factor of 10 % (= DF[%]), for example, can be calculated as follows:

$$P_{DB} = P_{Peak} \times 10\ \%$$

This means that the brake resistor's continuous rating P_{DB} will always be lower than maximum pulse power P_{Peak} by the DF[%] factor.

Resistance R_B must be at least as high as the breaking transistor's minimum permissible resistance R_{min}.



Use brake resistors with the recommended R_{Brec} resistance values for the DA1 variable frequency drives' ratings.



For the rated brake resistors for DA1 variable frequency drives, please refer to the technical data chapter in
→ Section 6.9, „Braking resistances", page 182.

2.7 Motor chokes

It is recommended to use a motor choke if using long cable lengths and/or connecting several motors in parallel. The motor reactor is in the output of the variable frequency drive. Its rated operational current must always be greater than/equal to the rated operational current of variable frequency drive.

For DA1 variable frequency drives, it is recommended to use a motor choke for motor cable lengths of 50 meters or more. Doing so may result in the following improvements:

- Longer maximum permissible screened motor cable length, up to 200 m
  Longer maximum permissible motor cable length without screening, up 300 m
- Current smoothing and du/dt value (kV/µs) attenuation, providing additional protection for the winding insulation inside the motor,
- Motor noise and heat build-up will be reduced.

→ Take into account the maximum permissible motor cable lengths for the relevant EMC interference category.

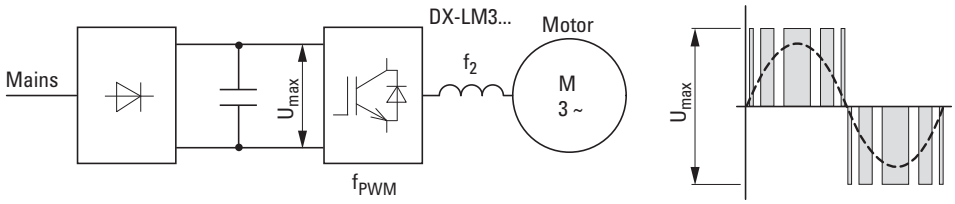

Figure 28:DX-LM3… rated operational data:
U_{max} = 750 V, f_2 = 0 - 400 Hz, f_{PWM} = 8 - 24 kHz (P2-24 setting on DA1)

It is also recommended to use a motor choke at the variable frequency drive's output if several motors with identical or different rated operational data are being run in parallel (V/Hz control only). In this case, the motor choke will compensate for the total resistance and total inductance decreases caused by the parallel circuit and will attenuate the cables' higher stray capacitance.

→ For the rated motor chokes for DA1 variable frequency drives, please refer to the technical data chapter in
→ Section 6.10, „Motor chokes“, page 188.

→ For more information and technical data on DX-LM3… motor chokes, please refer to instruction leaflet IL00906003Z.

2.8 Sine filter

The DX-SIN3… sine filter removes high-frequency components from the variable frequency drive's output voltage (U_2) reducing conducted and emitted interference as a result. The sine filter's output voltage will have a sinusoidal shape with a small superimposed ripple voltage.
The sinusoidal voltage's total harmonic distortion is typically 5 to 10 %. This will reduce noise and losses in the motor.

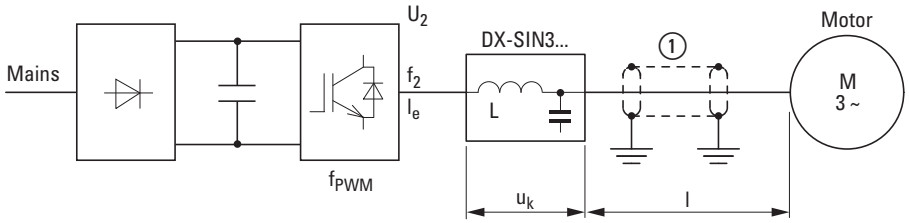

Figure 29:Maximum permissible motor cable lengths

① **Screened motor cable:** $U_2 \leqq 230$ V → l ≦ 200 m; $U_2 \leqq 500$ V → l ≦ 150 m
Unscreened motor cable: $U_2 \leqq 230$ V → l ≦ 300 m; $U_2 \leqq 500$ V → l ≦ 200 m

→ Sine filter DX-SIN3… should only be operated with fixed switching frequencies.
Accordingly, the carrier frequency (P2-24) must be set to the value set in parameter P6-02 (auto temperature management) (P2-24 = P6-02).

Permissible carrier frequencies for DA1 with DX-SIN3…:
1 ≙ 8 kHz; 2 ≙12 kHz

As a result of double modulation, the value set on the DA1 variable frequency drive will be twice the effective value on the sine filter (1 ≙ 8 kHz → 4 kHz; 2 ≙ 12 kHz → 6 kHz).

→ For the rated sine filters for DA1 variable frequency drives, please refer to the technical data chapter in
→ Section 6.11, „Sine filter“, page 190.

2.9 Three-phase motor

2.9.1 Motor selection



Check whether the DA1 variable frequency drive you selected and the AC motor you will be using are compatible with each other as per the corresponding voltage (mains and motor voltage) and rated operational current.

General recommendations for motor selection:

- Use three-phase induction motors with squirrel-cage rotors and surface cooling – also referred to as three-phase asynchronous motors or standard motors. Other types of motors, such as external rotor motors, wound rotor motors, reluctance motors, permanent magnet motors, synchronous motors, and servomotors can also be run with DA1 variable frequency drives, but will normally require additional engineering, modifying the various parameters, and detailed information from the motor manufacturer.
- Only use motors that have insulation class F (maximum steady state temperature of 155 °C) at least.
- Choose 4 pole motors preferably (synchronous speed: 1500 min^{-1} at 50 Hz and 1800 min^{-1} at 60 Hz).
- Take the operating conditions into account for S1 operation (IEC 60034-1).
- Do not oversize the motor, i.e., the motor should not be more than one rating level higher than the rated motor output.
- In the case of undersized motors, the motor output should not be more than one rating level lower than the rated rating level (in order to ensure that the motor will be protected).
  For significantly lower motor outputs, the "frequency control (V/Hz)" operating mode must be set (P4-01 = 2).

2.9.2 Circuit types with three-phase motors

A three-phase motor's stator winding can be connected in a star connection or delta circuit as per the mains voltage (U_{LN} = output voltage U_2) and the rated operational data on the motor's nameplate (rating plate).

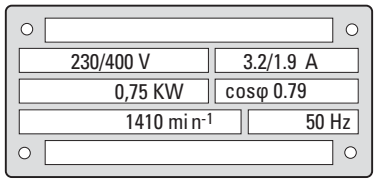

Figure 30:Example of a motor rating plate

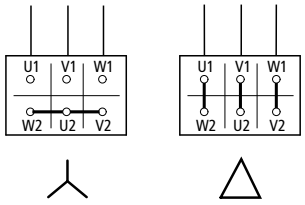

Figure 31:Configuration types:
Star-connected circuit (left), delta circuit (right)

Examples based on figures 30 and 31

Motor in star connection,
mains voltage: three-phase 400 V; output voltage: three-phase 400 V

→ DA1-342D2…

Motor in delta circuit,
mains voltage: single-phase 230 V; output voltage: three-phase 230 V

→ DA1-124D3…

Motor connection

DA1 variable frequency drives	according to IEC	according to UL
U	U1 (-U2)	T1 (-T4)
V	V1 (-V2)	T2 (-T5)
W	W1 (-W2)	T3 (-T6)

2.9.3 Connecting Motors in Parallel

When in V/Hz control mode (default setting, P4-01 = 2), DA1 variable frequency drives can be used to run multiple motors simultaneously.

→ If multiple motors are connected in parallel, the total of their motor currents must be lower than the DA1 variable frequency drive's rated operational current.

Connecting motors in parallel reduces the load resistance at the variable frequency drive output. The total stator inductance will be reduced and the cables' stray capacitance will be increased. The result will be greater harmonic distortion when compared to a single-motor connection. A motor choke or a sine filter should be used at the variable frequency drive's output in order to reduce this harmonic distortion.

→ When running multiple motors in parallel with a single variable frequency drive, the individual motors' outputs should not be more than three output classes apart.

→ If several motors are being run in parallel, you will not be able to use the variable frequency drive's electronic motor protection. As a result, each individual motor must be protected with thermistors and/or an overload relay. Within a frequency range of 20 to 120 Hz, the PKE electronic motor-protective circuit-breaker can be used for motor protection at a DA1 variable frequency drive's output as well.

NOTICE

If multiple motors are being run simultaneously using a single variable frequency drive, make sure to size the individual motors' contactors as required for utilization category AC-3. The motor contactors must be selected according to the rated operational currents of the motors that will be connected.

→ The total of the motor currents in operation, plus one motor's inrush current, must be less than the rated operational current of the variable frequency drive.

In applications with motors that will be connected and disconnected, we recommend using a motor choke.

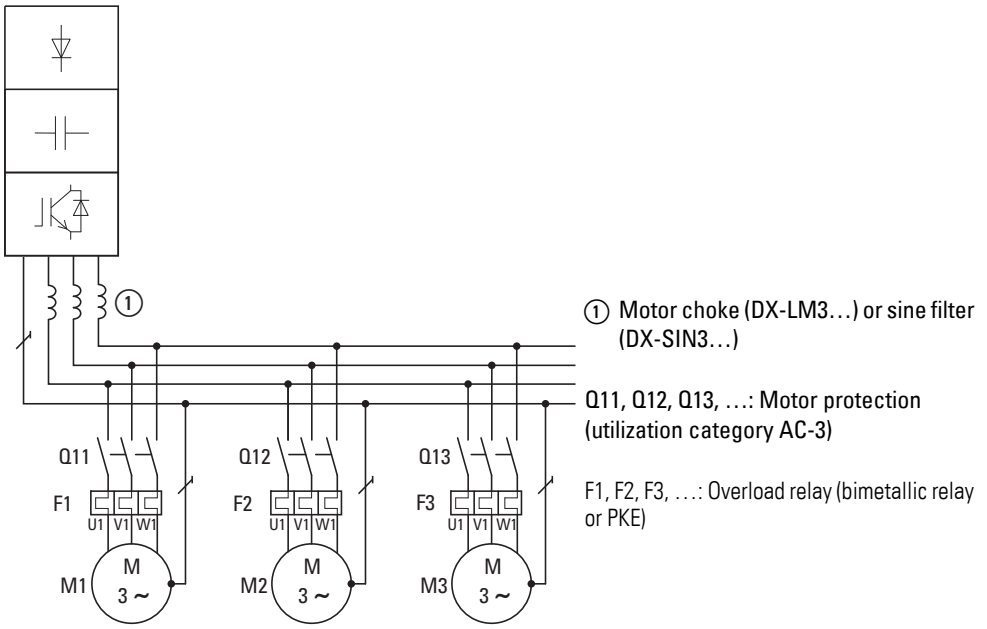

Figure 32:Example: Parallel connection of several motors to one frequency inverter

2.9.4 Single-phase AC motors

It is not permitted to run DA1 variable frequency drives with single-phase AC motors (induction motors), single-phase asynchronous motors (capacitor motors), shaded-pole motors, etc.

2.9.5 Connecting EX motors

The following aspects must be taken into account when connecting hazardous location motors:

- A DA1 variable frequency drive can be installed in an explosion-proof enclosure within the hazardous location or in a control panel outside the hazardous location.
- All applicable industry-specific and country-specific regulations for hazardous locations (ATEX 100a) must be complied with.
- The specifications and instructions provided by the motor's manufacturer with regard to operation with a variable frequency drive – e.g., whether motor reactors (dV/dt limiting) or sine filters are required – must be taken into account.
- Temperature monitors in the motor windings (thermistor, Thermo-Click) must not be connected directly to the variable frequency drive, but instead must be connected through a relay approved for the hazardous location (e.g. EMT6).

2.9.6 Synchronous, reluctance, and PM motors

DA1 variable frequency drives can be used to run premium efficiency three-phase motors, such as:

- IE3 and IE4 efficiency classes –
  as defined in IEC/EN 60034-30, EU No. 4/2014
- Permanent magnet motors (PM motor),
- Synchronous reluctance motors (SynRM)
- Brushless DC motors.

These motor technologies have comparable efficiencies at their rated operating point and identical efficiency classes, but also have significant differences when it comes to their startup behavior and partial-load operation.

Moreover, the corresponding nameplate specifications (315 V, R_{20*} = 2.1 Ω, L* = 20 mH, and U_{PoI} = 195 V/1000 rpm, for example) will deviate significantly from the usual specifications.



For information on and examples for permanent magnet and brushless DC motors, please refer to application note AP040051EN.

2.10 STO function

2.10.1 Overview

DA1 variable frequency drives include the STO function (STO = Safe Torque Off) as part of their standard range of functionalities. This function meets the requirements for variable-speed drive systems defined in Part 5-2 of the IEC 61800 standard and ensures that torque-generating energy is no longer able to act on the motor shaft and that unintended starting is prevented. Moreover, this state is monitored internally in the drive.

The STO function can be used anywhere where the corresponding motor will come to a stop by itself in a sufficiently short amount of time as a result of the corresponding load torque or friction, as well as in cases in which coasting has no safety implications.

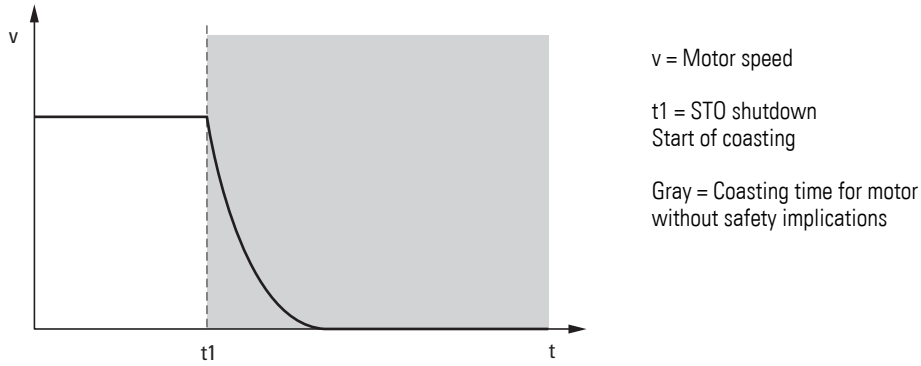

Figure 33:: STO conforming to Stop Category 0

This safety function corresponds to uncontrolled stopping as defined in IEC 60204-1, Stop Category 0.
It can be used if it is necessary to switch off the power in order to prevent unexpected starts.

Additional measures (such as mechanical brakes) may be required in order to prevent hazards in which external factors are involved (e.g., suspended loads falling down).

CAUTION

When used in conjunction with permanent magnet motors and in the unlikely case of multiple output semiconductors (IGBTs) failing, having the STO function activated may result in a motor shaft rotational movement of 180 degrees/p (p = Number of motor pole pairs).

DANGER

The STO function is an electronic mechanism that does not provide sufficient protection against electric shock. Additional potential isolation measures may be accordingly required (e.g., switch-disconnector).

2.10.2 TÜV certification

DA1 variable frequency drives with a TÜV logo on their nameplate feature an STO function that complies with the following standards:

Standard	Classification
EN 61800-5-2:2007	Type 2: "Safely removed torque"
EN ISO 13849-1:2006	PL d
EN 61508 (Part 1 to 7)	SIL 2
EN60204-1	Stop category 0: "Uncontrolled stopping by means of immediately cutting the power supply to the machine drive elements"
EN 62061	SIL CL 2

The following information and descriptions for the STO function are translations of the original description in English (TÜV specification).

2.10.3 Safety relay specification

Safety component monitoring requires an approved safety relay.

When used together with a DA1 variable frequency drive, the following minimum requirements must be met for the STO function:

Standard requirement	SIL 2 or PL d SC 3 or better with interlocked opposing contacts
Number of output contacts	Two independent
Rated switching voltage	30 V DC
Current carrying capacity	100 mA (at least)

2.10.4 STO-compatible installation



DANGER

Make sure to use proper earthing and select cables based on local regulations or standards.

The variable frequency drive may have a leakage current greater than 3.5 mA AC or 10 mA DC. In addition, the grounding cable must be sized for the maximum mains fault current, which is normally limited by fuses or miniature circuit-breakers. Appropriately sized fuses or miniature circuit-breakers should be installed at the mains supply for the variable frequency drive in line with local regulations or standards.



DANGER

The “STO wiring” must be protected against unintended short-circuits and unintended tampering and modifications.
It must be ensured that the "STO input signal" (control signal terminals 12/13) has a safe operating state.



CAUTION

Variable frequency drives with an IP 20 degree of protection that are used in environments with a pollution degree of 2 must be installed in a control panel with a degree of protection of IP 54 or better.



In order to prevent damage to the variable frequency drive, the devices should remain in their original packaging until right before they are installed.
They must be stored in a dry and clean area with a temperature range of -40 °C to 60 °C.



The conductor cross-section used for the STO installation should be between 0.05 and 2.5 mm^2 (AWG 30-12).
The length of the cable connected to the control signal terminals should not exceed 25 meters.

In addition to the wiring guidelines for an installation meeting EMC requirements (→ Section 3.5, „EMC installation“, page 83), the following requirements must be observed as well for the "STO wiring":

- The STO-compatible installation must be protected against short-circuits and tampering. The cables in the STO circuit can be mechanically protected with a closed cable duct or with a conduit (eks = ground and short-circuit-safe installation).
- The 24 VDC power supply for the STO inputs can be supplied from the DA1's internal 24 VDC voltage or from an external 24 VDC power supply.
- Accordingly, the DA1 variable frequency drive should be wired as described below:

STO installation with internal DA1 supply voltage (24 V DC)

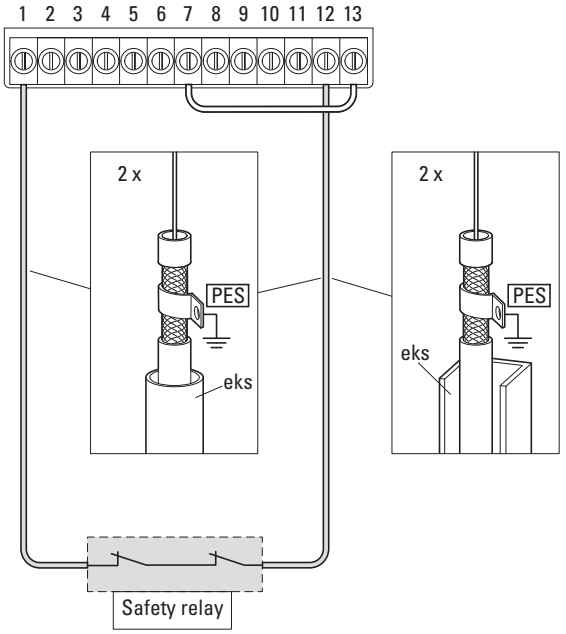

Control signal terminals

1:	24 V DC, output, max. 100 mA
7 or 9:	0 V
12:	STO+, logical high signal, input = 18 - 30 VDC from the safety controller
13:	STO-, 0-V connection to internal control voltage (terminal 7 or 9)

Figure 34:STO installation with internal control voltage

The connecting cable from control signal terminal 1 (+24 V) to the safety relay's contact and the connecting cable from the safety relay's contact to control signal terminal 12 (STO+) must be wired individually and installed separately (eks, separate mechanical protection with two closed cable ducts or two conduits). These two separately wired single cables must be screened, and the corresponding cable screen must be earthed (PES).

STO installation with external supply voltage (24 V DC)

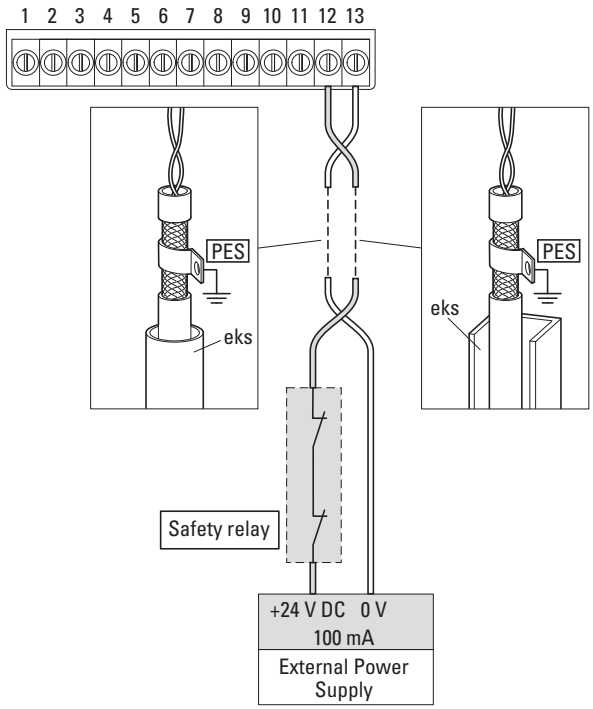

Control signal terminals

12: STO+, logical high signal, input = 18 - 30 VDC from the safety controller

13: STO-, 0-V connection to internal control voltage (terminal 7 or 9)

Figure 35:: STO installation with external control voltage

The two connecting cables going from the external control voltage and the safety relay to control signal terminals 12 (STO+) and 13 (STO-) must be twisted.
This twisted pair must be routed inside a closed cable duct or conduit (eks) and must also be screened, with the corresponding cable screen being earthed (PES).

The external control voltage should meet the following specifications:

Rated control voltage	24 V DC
Voltage for the logical STO high signal	18 - 30 V DC
Current carrying capacity	100 mA

2.10.5 STO function pick-up time

The total pick-up time for the STO function is the time that elapses from the moment a safety-relevant event occurs on the system's components (aggregate) to the moment a safe state is reached (in this case: Stop category 0 as defined in IEC 60204-1):

- The pick-up time from the moment the STO inputs (control signal terminals 12 and 13) become de-energized to the moment when the outputs in the power section (U, V, W) are in a state in which no torque is produced in the motor (STO function activated) is less than 1 ms.

- The pick-up time from the moment the STO inputs (control signal terminals 12 and 13) become de-energized to the moment the STO monitoring status changes is less than 20 ms.
- The pick-up time from the moment a fault is detected in the STO circuit to the moment Sto-F is signaled (fault indicator, digital output) is less than 20 ms.

2.10.6 STO function parameters



→ The STO function is always activated and enabled in DA1 variable frequency drives – regardless of the operating mode or of parameter changes made by the user.

During normal operation (supply voltage present), there are various options for monitoring the STO inputs' (control signal terminals 12 and 13) state.

If the STO inputs are de-energized:

- The corresponding operating unit will display InHibit.
  Exception: If the DA1 variable frequency drive detects a fault, the corresponding fault code will be displayed (not: InHibit)
- Relay RO1 will be switched off if parameter P2-15 is set to 13 (changeover contact: 14-16 = open, 14-15 = closed)
- Relay RO2 will be switched off if parameter P2-18 is set to 13 (N/O: 17-18 = open).

Table 3: STO-relevant parameters

PNU	Modbus ID	Access right		Type name	Value	Description	DS
		RUN/ STOP	ro/rw				
P2-15	237	RUN	rw	RO1 function	0 - 13	Used to select the function for output relay RO1 Possible values: • **0**: RUN, enable (FWD/REV) • **1**: READY, variable frequency drive ready for operation • **2**: Speed = speed reference value • **3**: Speed > 0 • **4**: Speed ≧ limit value: ON: ≧ P2-16; OFF: < P2-17 • **5**: Motor current ≧ limit value: ON: ≧ P2-16; OFF: < P2-17 • **6**: Torque ≧ limit value: ON: ≧ P2-16; OFF: < P2-17 • **7**: Analog input AI2 ≧ limit value: ON: > P2-16; OFF: < P2-17 • **8**: reserved • **9**: reserved • **9**: reserved • **10**: reserved • **11**: reserved • **12**: reserved **13**: STO status (STO = Safe Torque OFF)	1
P2-18	240	RUN	rw	RO2 function	0 - 13	Used to select the function for output relay RO2 Possible values: • **0**: RUN, enable (FWD/REV) • **1**: READY, variable frequency drive ready for operation • **2**: Speed = speed reference value • **3**: Speed > 0 • **4**: Speed ≧ limit value: ON: ≧ P2-19; OFF: < P2-20 • **5**: Motor current ≧ limit value: ON: ≧ P2-19; OFF: < P2-20 • **6**: Torque ≧ limit value: ON: ≧ P2-19; OFF: < P2-20 • **7**: Analog input AI2 ≧ limit value: ON: > P2-19; OFF: < P2-20 • **8**: Control signal for the external brake of a hoist drive (enables the "hoisting gear" mode). ON: Output frequency ≧ P2-07 while there is a START command present (FWD/REV). OFF: Output frequency ≦ P2-08 if there is no START command present (FWD/REV). • **9**: reserved • **9**: reserved • **10**: reserved • **11**: reserved • **12**: reserved **13**: STO status (STO = Safe Torque OFF)	0

PNU	Modbus ID	Access right		Type name	Value	Description	DS
		RUN/ STOP	ro/rw				
P2-36	258	RUN	rw	Start Mode	Edge-r Auto-0 … Auto-5	Used to define the drive's behavior in relation to the enable signal and to configure automatic restarting after a fault. Possible values: • **0**: Edge-r: If the enable signal is already active before the supply voltage is switched on or before a RESET, the drive will not start. Instead, the drive will wait for a rising edge before starting. • **1**: Auto-0: If the enable signal is already active before the supply voltage is switched on or before a RESET, the drive will start automatically. • **2** to **6**: Auto-1 to Auto-5: If the device is switched off due to a fault, the drive will automatically try to start again. The drive can make up to 5 start attempts, with an interval of P6-03 between each attempt. As long as the supply voltage is not switched off, the counter's contents will be retained, i.e., the contents of the counter used to count the number of start attempts. If the drive fails to start automatically on the last attempt, it will be switched off with a fault message, after which a manual RESET will be required. **Notice:** Automatic starting is only possible if the control commands are received via the terminals (P1-12 = 0, P1-12 = 11, if the unit automatically switches to terminal-based operation after a loss of communication). **Observe the following warning!**	Auto-0



DANGER

For the automatic start mode (Auto-0 to Auto-5), personnel protection and the impact on the drive system must be analyzed separately.

2.10.7 Fault messages

The following table lists the error messages relevant to the STO function, as well as potential causes and fixes.

Table 4: Fault messages

Display[1]	Fault code[2] Modbus RTU [hex]	Designation	Potential causes and fixes
PS-trP	05	Power section fault	• Fault message from the power section's output. • Check the connection to the motor (short-circuit, earth fault). • Disconnect the cable from terminals U, V, W. If the fault message cannot be reset, please contact your nearest Eaton representative.
Sto-F	29	Internal STO circuit fault	Please contact your closest Eaton representative.

1) Display = Error code on the 7-digital display assembly or on the optional DX-KEY-LED keypad
2) Modbus RTU [hex] = Hexadecimal fault code via Modbus

2.10.8 STO function checklist

A drive's STO function should always be checked before initial commissioning, after maintenance, and at regular maintenance intervals. This check should include the following tests:

No.	Occupation	Note
1	The STO inputs (control signal terminals 12, 13) are de-energized. I nH ıb ıE is displayed when the motor is stopped and there is a stop command on the DA1 variable frequency drive.	
2	The STO inputs (control signal terminals 12, 13) are de-energized and the DA1 variable frequency drive receives a start command (depends on the mode selected in P1-13, Config Select DI). I nH ıb ıE is displayed. The motor does not start.	
3	The STO inputs (control signal terminals 12, 13) are powered with 24 VDC and the DA1 variable frequency drive receives a start command (depends on the mode selected in P1-13, DI Config Select). The motor starts normally and is controlled by the DA1 variable frequency drive.	
4	The motor is running while being controlled by the DA1 variable frequency drive and an STO input (control signal terminal 12 or 13) is de-energized. I nH ıb ıE is displayed and the motor coasts,	

2.10.9 Regular maintenance

The STO function should always be included in a scheduled maintenance process (at least once per year) so that the function will be tested on a regular basis to make sure it is intact and complete – especially after changes are made to the safety system and after repairs are made.

During the corresponding inspection and testing, the variable frequency drive's installation and operating environment must be checked:

- The ambient temperature must fall within the admissible range.
- The heat sink and fan must be free of dust and other foreign particles. The fan must be able to rotate freely.
- The enclosure in which the variable frequency drive is installed must be free of dust and condensate.
- The enclosure fan and air filter must provide the required airflow.
- All electrical connections must be checked:
  The screw terminals must be properly tightened and the power cables must not show any signs of heat damage.

2.10.10 "Safe stop" function

The purpose of the STO function is to prevent the drive from making the motor produce a torque when there is no input signal at terminals 12 and 13. This makes it possible to integrate the drive into a complete safety system in which the "safe stop" function needs to be fully implemented.



DANGER

The STO function cannot prevent unexpected restarting or automatic restarting (if the corresponding parameters are configured for this type of restarting). Accordingly, it must not be used to perform maintenance or cleaning work on the machine.

The STO function eliminates the need to use electro-mechanical contactors with self-monitoring auxiliary contacts in order to implement safety functions.



DANGER

In certain applications, additional measuring and monitoring equipment may be needed in order to meet the requirements for the system's safety function.
The STO function does not include motor braking, and the DA1's braking function cannot be considered a fail-safe method by itself.
If a motor braking function is required, an appropriate safety relay and/or a mechanical braking system or a similar method must be used.

The STO function integrated into DA1 variable frequency drives meets the definition of a "safe stop" as specified in IEC 61800-5-2 and of a non-controlled stop as per Category 0 (emergency switching off) as specified in IEC 60204-1. This means that the motor will coast when the STO function is activated. The method used for stopping must be appropriate for the system being driven by the motor.

The STO function is approved for use as a fail-safe method even in cases in which the STO signal is not present and a single fault has occurred in the drive. The drive was accordingly tested in accordance with the following security standards:

	SIL (Safety Integrity Level)	**PFH_d** (Probability of dangerous Failures per Hour)	**SFF (%)** (Safe Failure Fraction)	**Lifetime assumed**
EN 61800-5-2	2	1.23E-09 1/h (0.12 % of SIL 2)	50	20 Yrs
	PL (Performance Level)	**CCF (%)** (Common Cause Failure)		
EN ISO 13849-1	PL d	1		
	SIL CL			
EN 62061_x	SIL CL 2			

The values provided here can only be ensured if the DA1 variable frequency drive is installed in an environment that stays within the permissible limits:

- Ambient temperature range: -10 to +50 °C, taking into account any limits that depend on frame size and degree of protection
- Maximum altitude for rated operation: 1000 m above sea level, with altitude derating of 1% for every 100 m above 1000 m (up to max. 4000 m for IEC / 2000 m for UL)
- Relative humidity: < 95% (non-condensing). The DA1 variable frequency drive must always be free of frost and moisture.

3 Installation

3.1 Introduction

This chapter provides a description of the mounting and the electrical connection for the DA1 variable frequency drive.



While mounting and/or assembling the variable frequency drive, cover all ventilation slots in order to ensure that no foreign bodies can enter the device.



Perform all installation work with the specified tools and without the use of excessive force.



For information on how to install DA1 variable frequency drives with the various enclosure versions, please refer to the following instruction leaflets:

- IL04020010Z (IP20 in FS2, FS3)
- IL04020012Z (IP20 in FS8)
- IL04020011Z (IP55 in FS4, …, FS7)
- IL04020015Z (IP66 in FS2, FS3)

3.2 Mounting position

DA1 variable frequency drives are available with three enclosure versions:

- IP20/NEMA 0 degree of protection for use in control panels,
- IP55/NEMA 12 degree of protection,
- IP66/NEMA 4X degree of protection.

The IP55 and IP66 enclosure versions provide protection against moisture and dust, allowing them to be used under harsh conditions indoors.

Without the required additional measures, using the device in the following environments is strictly prohibited:

- Explosion-proof Ranges
- Environments with damaging substances:
  - Oils and acids
  - Gases and fumes
  - Dust
  - Radiated noise
- Environments with mechanical vibration and impact loads that go beyond the requirements in EN 50178.
- Areas in which the variable frequency drive takes care of safety functions that must guarantee machine and personnel protection.

3.3 Mounting

The engineering instructions in this section are meant to show how to install the device in a suitable enclosure for devices with degree of protection IP20 and IP55 in compliance with standard EN 60529 and/or any other applicable local regulations.

- The enclosures must be made of a material with high thermal conductivity.
- If a control panel with ventilation openings is used, the openings must be located above and below the variable frequency drive in order to allow for proper air circulation. Air should be delivered from the bottom and conveyed outwards through the top.
- If the environment outside the control panel contains dirt particles (e.g., dust), a suitable particulate filter must be placed on the ventilation openings and forced ventilation must be used. The filters must be maintained and cleaned if necessary.
- An appropriate enclosed control panel (without ventilation openings) must be used in environments containing large percentages or amounts of humidity, salt, or chemicals.

→ Install the DA1 variable frequency drive only on a nonflammable mounting base (e.g., on a metal plate).

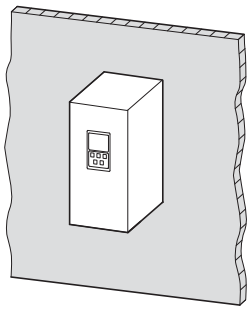

Figure 36:Surface mounting on metal plate

IP66 DA1 variable frequency drives must be installed as required by the local conditions for this degree of protection.

3.3.1 Mounting position

DA1 series variable frequency drives are designed to be mounted vertically. The maximum permissible inclination is 30°.

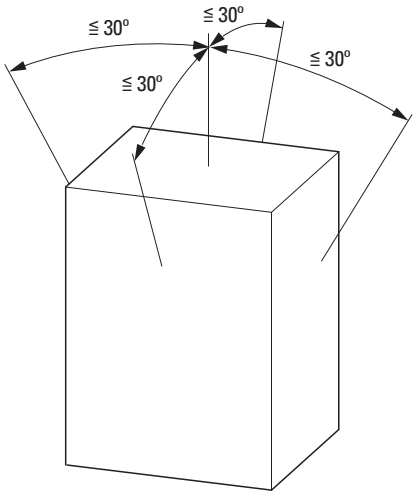

Figure 37:Mounting position

3.3.2 Cooling measures

In order to guarantee sufficient air circulation, enough thermal clearance must be ensured according to the frame size (rating) of the frequency inverter.

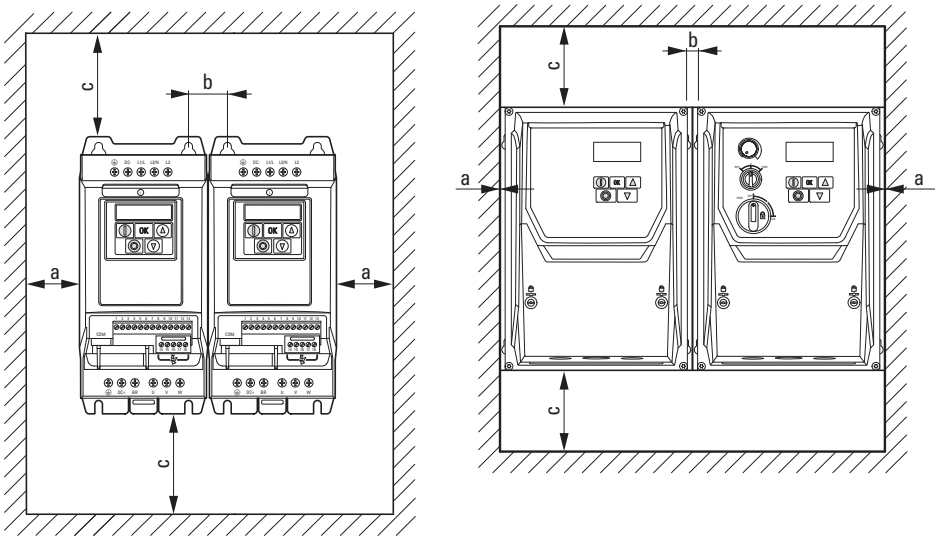

Figure 38:Clearances for air cooling (left: IP20; right: IP66)

The variable frequency drives can be mounted side by side without any lateral clearance between them.

Table 5: Minimum clearances and required cooling airflow

Frame size (degree of protection)	a		b		c		Required airflow	
	MM	in	MM	Occur in	mm	Occur in	m^3/h	cfm
FS2 (IP20)	50	1.97	31	1.22	75	2.95	70	41
FS2 (IP66)	0	0	12	0.47	150	5.91	0	0
FS3 (IP20)	50	1.97	31	1.22	100	3.94	190	112
FS3 (IP66)	0	0	13	0.51	150	5.91	0	0
FS4 (IP 55)	10	0.39	71	2.8	200	7.87	425	250
FS5 (IP 55)	10	0.39	70	2.76	200	7.87	425	250
FS6 (IP 55)	10	0.39	140	5.52	200	7.87	650	383
FS7 (IP 55)	10	0.39	140	5.52	200	7.87	650	383
FS8 (IP20)	50	1.97	162	6.38	350	13.78	825	485

The values in 5 are recommended values for an ambient air temperature of up to +50 °C for IP20 and +40 °C for IP55 and +40 °C in FS8 (IP20), an installation altitude of up to 1000 m, and a switching frequency of up to 8 kHz.

→ Typical heat loss makes up about 3 % of the operational load conditions.

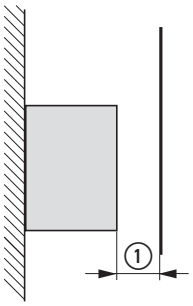

Frame size	Minimum clearance ①
FS2, …, FS7	≧ 15 mm (≧ 0.59 inch)
FS8	≧ 50 mm (≧ 1.97 inch)

Figure 39: Minimum required clearance ① in front of the variable frequency drive when installed in an enclosure (control panel)

→ Please note that the mounting makes it possible to open and close the control signal terminal covers without any problems.

When variable frequency drives with internal fans are installed vertically over each other, an air baffle must be placed between the devices. Failure to do so may expose the device on top to a thermal overload caused by the guided air flow (device fan).

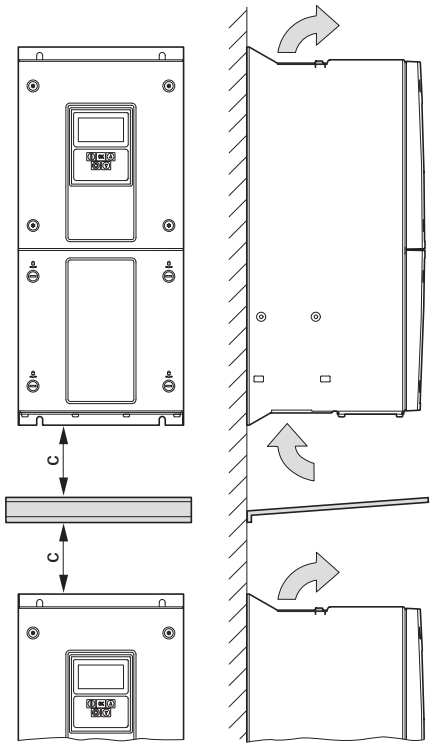

Figure 40:Deflector due to increased circulation caused by device fan

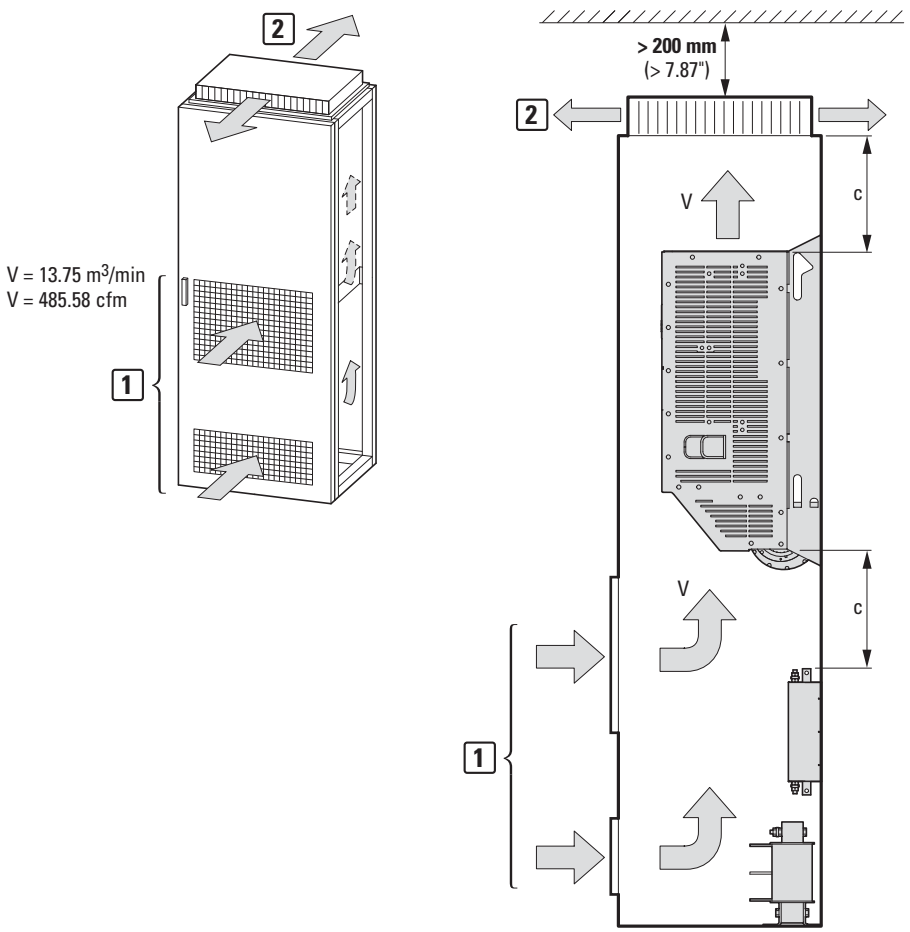

Figure 41:Air circulation in frame size FS8

There must be enough clearance above and in front of the control panel in order to ensure that there will be adequate cooling and space for any required maintenance work. The required volume of cooling air [1] and the required cooling air temperature must ensure that the variable frequency drive's maximum permissible ambient temperature will not be exceeded.

It must be possible for the hot exhaust air [2] to be channeled away unobstructed. Residual heat may cause the variable frequency drive's maximum permissible ambient temperature to be exceeded.

The heat dissipation of the variable frequency drive and of the accessories in the power branch (mains choke, motor choke, sine filter) will vary significantly depending on the load, the output frequency, and the carrier frequency being used.

→ Section 6.2, „Specific rated operational data", page147 lists the variable frequency drives' heat dissipation at the rated operational current.

The following formula provides a good reference value for estimating heat dissipation at target conditions, and can be used to size cooling and ventilation equipment for electrical rooms:

$$P_{Dissipated}\ [kW] = P_{Motor}\ [kW] \times 0.025$$

3.3.3 Fixing

All DA1 variable frequency drive frame sizes can be mounted with screws. Moreover, frame sizes FS2 to FS3 with an IP20 degree of protection can be mounted on a mounting rail as well.

→ Install the DA1 variable frequency drive only on a nonflammable mounting base (e.g., on a metal plate).

→ Dimension and weight specifications for the DA1 variable frequency drive can be found in the → Section 6.3, „Dimensions“, page157.

3.3.3.1 Fixing with screws

→ Use screws with a washer and split washer with the permissible tightening torque in order to protect the enclosure and safely and reliably mount the device.

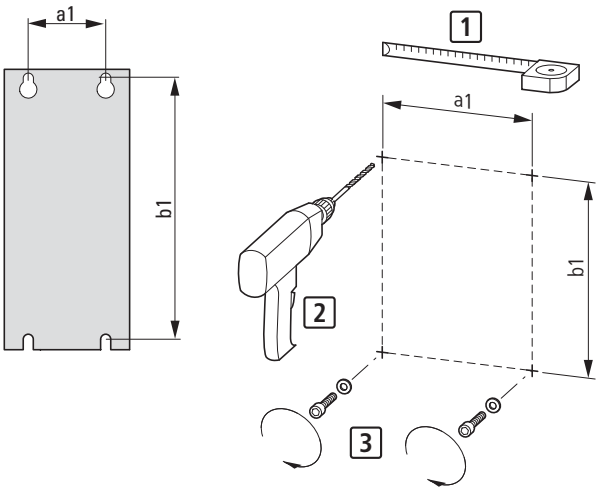

Figure 42:Mounting dimensions

▶ First fit the screws at the specified positions, mount the variable frequency drive and then fully tighten all screws.

Table 6: Installation dimensions, screws, tightening torques

Frame size	Degree of protection		a1		b1		Screw		Tightening torque	
FS	IP	NEMA	mm	Occur in	mm	Occur in	Quantity	Size	N/m	lb-in
FS2	IP20	NEMA 0	75	2.95	215	8.46	4	M4	1	8.85
FS2	IP66	NEMA 4X	176	6.93	200	7.87	4	M4	1.2 - 1.5	10.62 - 13.27
FS3	IP20	NEMA 0	100	3.94	255	10.04	4	M4	1	8.85
FS3	IP66	NEMA 4X	198	7.78	252	9.9	4	M4	1.2 - 1.5	10.62 - 13.27
FS4	IP55	NEMA 12	110	4.33	428	16.85	4	M8	4	35.4
FS5	IP55	NEMA 12	175	6.89	515	20.28	4	M8	15	132.76
FS6	IP55	NEMA 12	200	7.87	840	33.07	4	M10	20	177
FS7	IP55	NEMA 12	200	7.87	1255	44.41	4	M10	20	177
FS8	IP20	NEMA 0	420	16.54	942	37.09	4	M12	57	504.5

1 in = 1'' = 25.4 mm; 1 mm = 0.0394 in

3.3.3.2 Fixing on a mounting rail

As an alternative to screw fixing, DA1 variable frequency drives (sizes FS2 and FS3) and a degree of protection of IP20 can also be mounted on a mounting rail as per IEC/EN 60715.

→ If you use EMC mounting adapters (DX-EMC-MNT-…), use a tall mounting rail (15 mm) preferably.

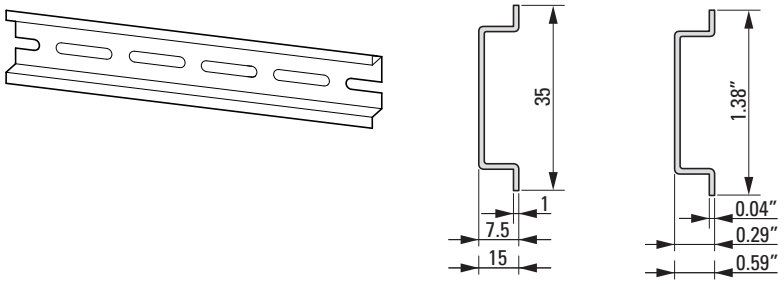

Figure 43:Mounting rail conforming with IEC/EN 60715

▶ To do this, place the variable frequency drive on the mounting rail from above [1] and press it down until it snaps into place [2].

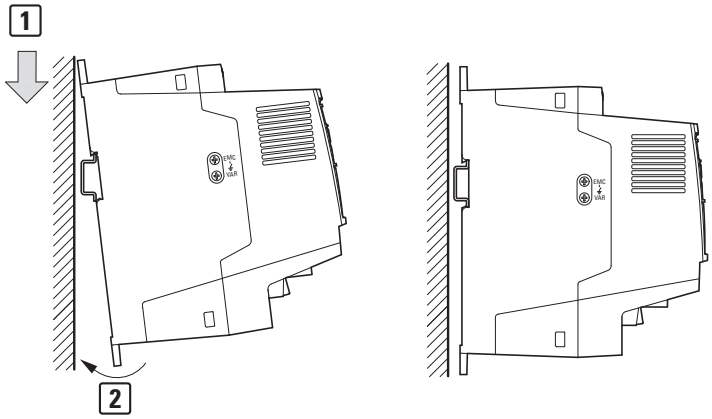

Figure 44:Fixing on mounting rails

Dismantling from mounting rails

▶ To remove the device, push down [2] on the clip being held by a spring force [1]. There is a marked recess at the bottom edge of the device that is intended for this purpose.
A flat-bladed screwdriver (blade width 5 mm) is recommended for pushing down the clip.

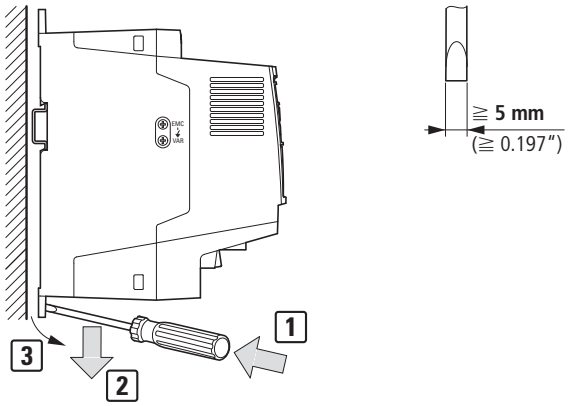

Figure 45:Dismantling from mounting rails

▶ Now pull the lower edge away from the mounting surface (towards you) [3] before lifting the variable frequency drive off the mounting rail.

3.3.4 Control panel installation

If you install the DA1 variable frequency drive in a control panel, make sure that the cabinet is installed in such a way that it is stable. The best option is to install it with the back panel lying against a wall. Moreover, the top of the cabinet should be fastened to the wall and the two front corners should be fastened to the floor. If the cabinet is set up in a freestanding configuration, all four corners must be fastened to the floor.

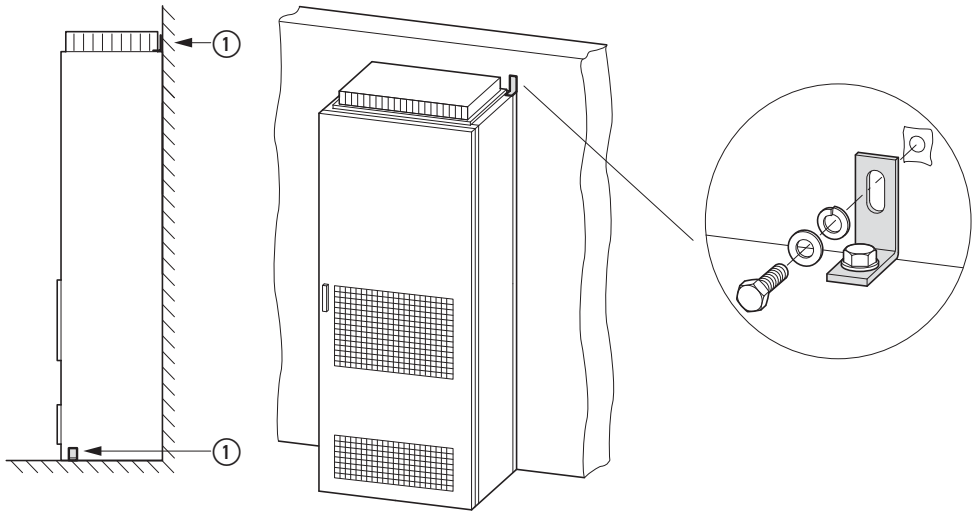

Figure 46:Stable control panel setup

Heavy accessories such as motor chokes and sine filters should always be installed on the control panel's base plate.

3.4 IP66/NEMA4X degree of protection

IP66 DA1 variable frequency drives are available in two versions:

- DA1-…-A66C: Activation via control signal terminals
- DA1-…-A6SC: Controlled with controls on the front and/or control signal terminals

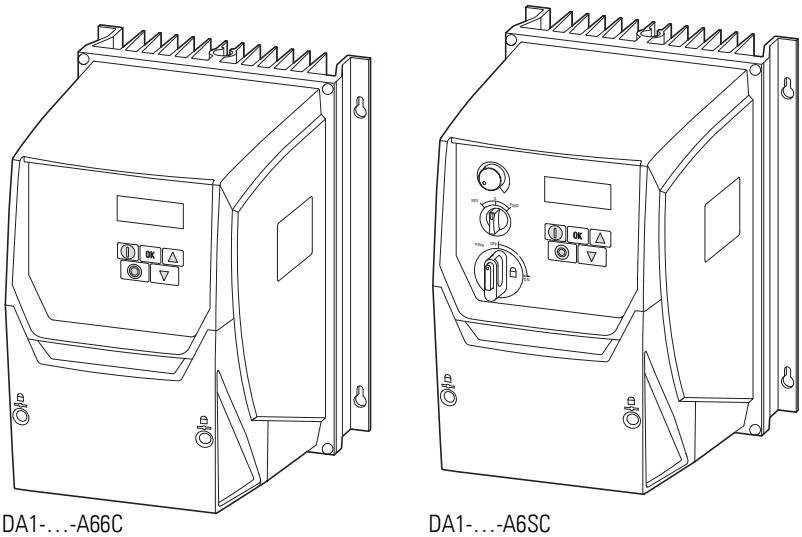

DA1-…-A66C DA1-…-A6SC

Figure 47:IP66 variants

The units must be mounted, with four screws and in a vertical position, on a wall or panel that is made of nonflammable material and is stable enough to hold the variable frequency drive's weight.

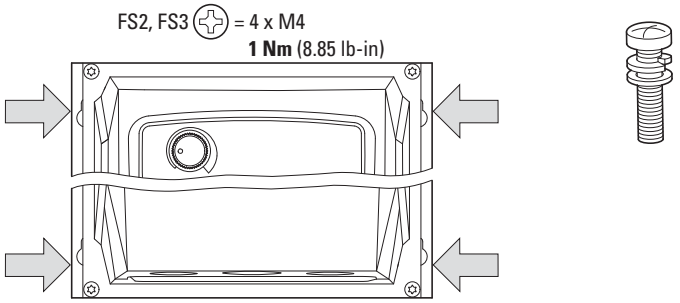

Figure 48:Openings for fixing screws

On the DA1-…-A6SC version, the main disconnect switch can be locked in the OFF position with a standard padlock.

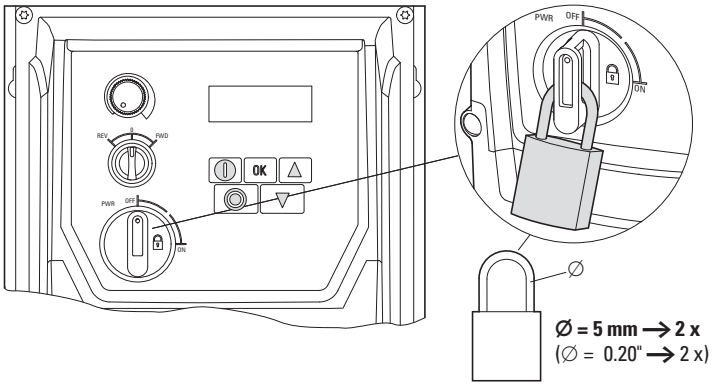

Figure 49:DA1-…-A6SC with padlock

▶ Push on the center of the switch in order to open the opening for the padlock.

3.5 EMC installation

The responsibility to comply with the legally stipulated limit values and thus the provision of electromagnetic compatibility is the responsibility of the end user or system operator. This operator must also take measures to minimize or remove emission in the environment concerned. He must also utilize means to increase the interference immunity of the devices of the system.



In a magnet system (PDS) with frequency inverters, you should take measures for electromagnetic compatibility (EMC) while doing your engineering, since changes or improvements to the installation site, which are required in the installation or while mounting, are normally associated with additional higher costs as well.

The technology and system of a variable frequency drive cause the flow of high frequency leakage current during operation. Because of this, all earthing elements must be low-impedance elements connected in such a way as to establish an electrical contact across a large surface area.

With leakage currents greater than 3.5 mA, in accordance with VDE 0160 or EN 60335, either

- the cross-sectional area of the protective conductor must be ≧ 10 mm^2,
- The protective conductor must be open-circuit monitored, or
- the second protective conductor must be fitted.

For an EMC-compliant installation, we recommend the following measures:

- Installation of the variable frequency drive in a metallically conductive housing
  with a good connection to ground,
- screened motor cables (short cables).



Ground all conductive components and housings in a drive system using as short a line as possible with the greatest possible cross-section (Cu-braid).

3.5.1 EMC compliance in the control panel

In order to have an installation that meets EMC requirements, make sure to connect all the metallic parts in the devices and in the control panel to each other across a large area and in a way that will make it possible to conduct high frequencies. Mounting plates and control panel doors should be connected to the panel by means of short drain wires with an electrical contact established across a large surface area.



Do not make connections to painted surfaces (electrolytic oxidation, yellow chromated).



Install the variable frequency drive as directly as possible (without spacers) on a metal plate (mounting plate).

Route mains and motor cables in the control panel as close to the ground potential as possible. This is because free moving cables act as antennas.

If routed in parallel, cables carrying high frequencies (e.g., screened motor cables) and clean cables (e.g., mains supply cable, control and signal cables) should be installed at a distance of at least 100 mm from each other in order to avoid electromagnetic interference. You should also use separate cable entries if there is a great difference in voltage potentials. If control cables and power cables need to cross, they should always do so at a right angle (90°).

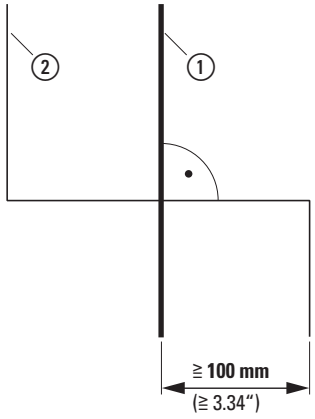

Figure 50:Cable routing

Do not route the control and signal cables ② in the same conduit as the power cables ①.
Analog signal cables (measured values, setpoints, and correction values) must be routed inside screened conduit.

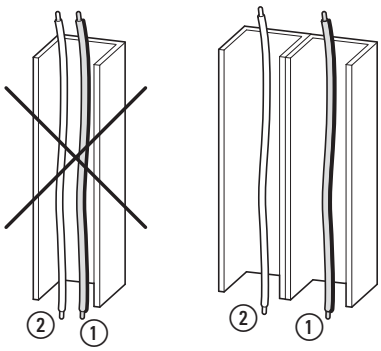

Figure 51:Separate routing

① Power cable: mains voltage, motor connection
② Control and signal lines, fieldbus connections

3.5.2 Earthing

The protective earth (PE) in the control panel should be connected from the mains supply to a central earth point (mounting plate, system earth).
The PE conductor's cross-sectional area must be at least as large as that of the incoming mains supply cable.

Every variable frequency drive must be individually connected to the power supply system's protective earth directly at the location of installation (system earthing). This protective earth must not pass through any other devices.

All protective conductors should be routed in a star topology starting from the central earth point, and all of the magnet system's conductive components (e.g. variable frequency drive, sine filter) should be connected.

The earth-fault loop impedance must comply with all locally applicable industrial safety regulations. In order to meet UL requirements, UL-listed ring cable lugs must be used for all earth wiring connections.



Avoid ground loops when installing multiple variable frequency drives in one control panel. Make sure that all metallic devices that are to be grounded have a broad area connection with the mounting plate.

3.5.2.1 Protective earth

This refers to the legally required protective earth for a variable frequency drive. An earthing terminal on the variable frequency drive, or the system earth, must be connected to a neighboring steel element in the building (beam, ceiling joist), an earth electrode in the ground, or a mains earth bus. The earth points must meet the requirements set forth by the applicable national and local industrial safety regulations and/or regulations for electrical systems.

3.5.2.2 Motor earthing

The motor earth must be connected to one of the earthing terminals on the variable frequency drive and to a neighboring steel element in the building (beam, ceiling joist), an earth electrode in the ground, or a mains earth bus.

3.5.2.3 Earth-fault protection

A fault current to earth can be produced by variable frequency drives due to their system characteristics. DA1 series variable frequency drives have been designed in such a way that the smallest possible fault current will be produced in compliance with standards applicable worldwide. In the case of devices powered with a three-phase supply (DA1-3…), this fault current must be monitored by a residual current device (RCD, type B).

3.5.3 Internal filters (EMC and VAR screws)

3.5.3.1 EMC screw

FS2 and FS3 DA1 variable frequency drives with an IP20 degree of protection feature two screws on the left side that are labeled EMC and VAR.

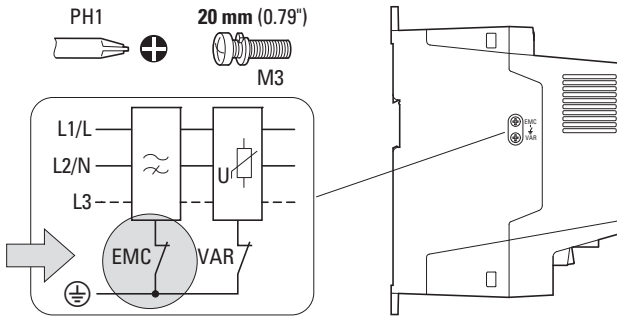

Figure 52:EMC and VAR screw

NOTICE

The screw labeled EMC must not be manipulated as long as the variable frequency drive is connected to the mains.

The EMC screw galvanically connects the EMC filter's mains-side capacitors to earth. The screw must be screwed in all the way to the stop (factory setting) in order for the variable frequency drive to comply with EMC standards.

Due to their system characteristics, variable frequency drives with an internal EMC filter will produce a larger fault current to earth than devices without a filter. For applications in which this larger leakage current may cause malfunction messages or disconnections (residual current device), the EMC filter's internal protective earth can be disconnected (remove the EMC screw to do this).
Local EMC regulations must be taken into account when doing so. If necessary, a specific low-leakage-current EMC filter (DX-EMC...-L) must be connected upstream.

In connections to isolated power sources (IT networks), the EMC and VAR screw should be removed. The earth fault monitors required for IT networks must be suitable for operation with power electronic devices (IEC 61557-8).

3.5.4 VAR screw

DA1 series variable frequency drives are equipped with an overvoltage filter for the input supply voltage that is designed to protect the devices from noise pulses in the mains voltage. Pulse spikes are typically caused by lightning strikes or by switching operations in other high-power devices on the same supply.

If high potential tests are performed on a system, these overvoltage protection components may cause the system to fail the test. In order to make it possible to perform this type of hipot tests, the overvoltage protection components can be disconnected by removing the VAR screw. The screw must be screwed back in after the high potential tests are performed and the test must then be repeated. The system must then fail the test, indicating that the overvoltage protection components have been reconnected.

NOTICE

The screw labeled VAR (→ Figure 52, page 86) must not be manipulated as long as the variable frequency drive is connected to the mains.

3.5.5 Screen earth kit

Cables that are not screened work like antennas (sending, receiving).

→ For a proper EMC connection, cables emitting interference (e.g. motor cables) and susceptible cables (analog signal and measurement values) must be screened and laid separately from each other.

The effectiveness of the cable screen depends on a good screen connection and a low screen impedance.

→ Use only shields with tinned or nickel-plated copper braiding. Braided steel shields are unsuitable.

→ Control and signal lines (analog, digital) should always be grounded on one end, in the immediate vicinity of the supply voltage source (PES).

3.5.6 EMC cable brackets

DX-EMC-MNT-… cable brackets can be used to route and secure cables in the connection area of an FS2 or FS3 variable frequency drive with an IP20 degree of protection. These cable brackets are mounted on the variable frequency drive's mains connection side (DX-EMC-MNT-…N) and motor side (DX-EMC-MNT-…M) using the corresponding mounting holes, and are then connected to the drive's earthing connection.

The cable brackets' integrated hole pattern (M4 screw tread) makes it possible to secure the cables being connected and relieve any strain on them by using the corresponding gland plates. It also makes it possible to have a 360° EMC connection (PES) in the case of screened cables.

These cable brackets are made of galvanized sheet steel.

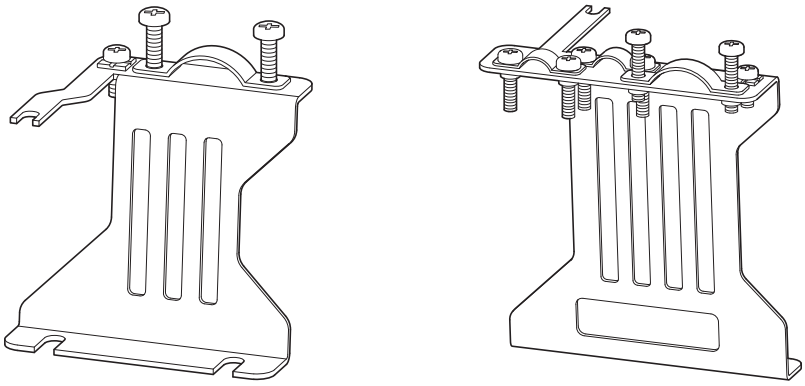

Figure 53: DX-EMC-MNT-...N (left), net and
DX-EMC-MNT-...M (right), motor, cable brackets

→ For more information and technical data on DX-EMC-MNT-… EMC cable brackets, please refer to instructional leaflet IL040010ZU.

→ DX-EMC-MNT-… EMC cable brackets are sold as individual units. There are different brackets for each DA1 variable frequency drive frame size (FS2 and FS3).
The gland plates and their fixing screws are included in the equipment supplied with the cable brackets.

Cable bracket	Frame size DA1	Gland plates Quantity/designation
DX-EMC-MNT-2N	FS2	1/mains connection
DX-EMC-MNT-2M	FS2	3/control cables, motor connection, external braking resistance
DX-EMC-MNT-3N	FS3	1/mains connection
DX-EMC-MNT-3M	FS3	3/control cables, motor connection, external braking resistance

3.5.7 General installation diagram

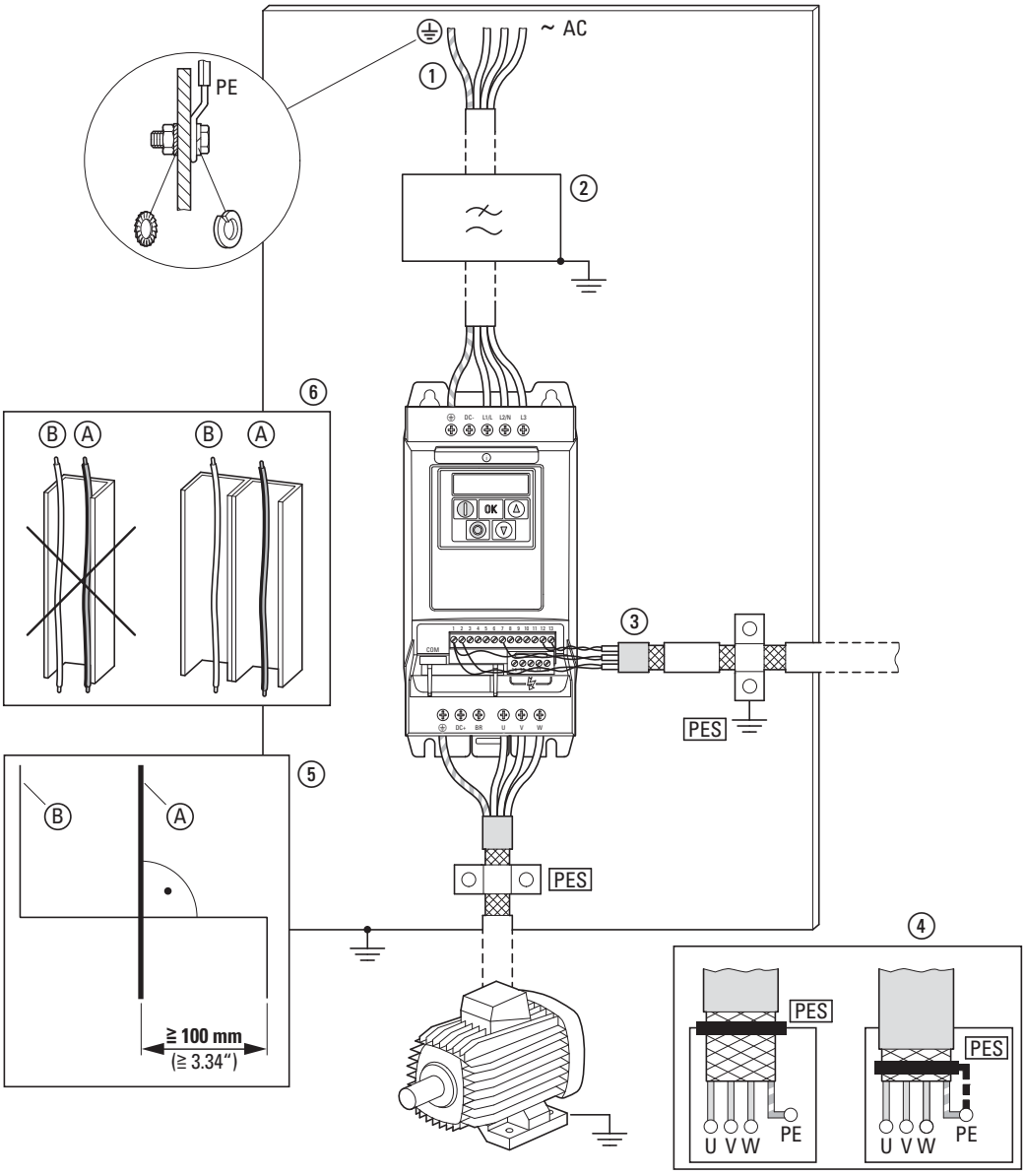

Figure 54:EMC installation

① Mains connection: Supply voltage, central earthing connection for control panel and machine
② External radio interference suppression filter: Optional DX-EMC… radio interference suppression filter for longer motor cables or use in a different EMC environment
③ Control connection: Connection for the digital and analog control cables, STO function, and communication via RJ45 plug-in connection
④ Motor connection: Connection (PES) between the screened motor cable and the motor's terminal box, made according to EMC requirements, with metal cable gland or with gland plate in the terminal box.
⑤ Cable routing: Power cables (A) and control cables (B) spatially routed separately from each other. If different potential levels need to cross, they should do so at a right angle as far as possible.
⑥ Cable routing: Do not route power cables and control cables parallel to each other in a single cable duct. If they need to be routed in parallel, they should be in separate metal cable ducts (in order to meet EMC requirements).

3.6 Electrical Installation

CAUTION

Carry out wiring work only after the variable frequency drive has been correctly mounted and secured.

DANGER

Electric shock hazard - risk of injuries!
Carry out wiring work only if the unit is de-energized.

NOTICE

Fire hazard!
Only use cables, circuit-breakers, and contactors that feature the indicated permissible nominal current value.

NOTICE

On DA1 variable frequency drives, earth leakage currents can be greater than 3.5 mA (AC).
Accordingly, as per IEC/EN 61800-5-1, an additional protective conductor must be connected or the protective conductor's cross-sectional area must be at least 10 mm^2.

DANGER

The components in the variable frequency drive's power section remain energized up to five (5) minutes after the supply voltage has been switched off (intermediate circuit capacitor discharging time).

Pay attention to hazard warnings!



Complete the following steps with the specified tools and without using force.

3.6.1 Power section connections

The connection to the power section is normally made via the connection terminals:

- L1/L, L2/N, L3, PE for the mains-side supply voltage.
  The phase sequence does not matter.
- DC+ (or +), DC- (or -), PE for DC link coupling or if the device is being supplied with DC voltage
- U, V, W, PE for the input wiring to the motor
- BR, DC+ (or +), PE for an external braking resistance
- DC+ (or +) or DC- (or -), PE for connecting all-pole sine filters

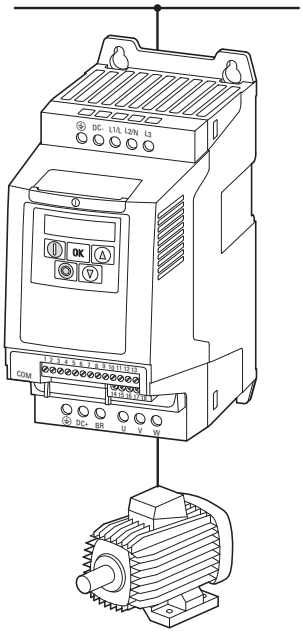

Figure 55:Connection in power section (schematic)

The number and the arrangement of the connection terminals used depend on the variable frequency drive's frame size and model.

NOTICE

The variable frequency drive must always be connected with ground potential via a grounding conductor (PE).

3.6.1.1 Connection terminals on frame sizes FS2 and FS3 with IP20

Table 7: Connection terminals (FS2, FS3)

Connection terminals	Description
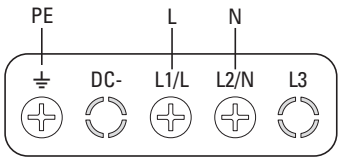	Connection with single-phase supply voltage (230 V): • DA1-12… (200 - 240 V)
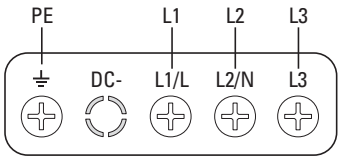	Connection with three-phase supply voltage: • DA1-32… (200 - 240 V) • DA1-34… (380 - 400 V) • DA1-35… (500 - 600 V)
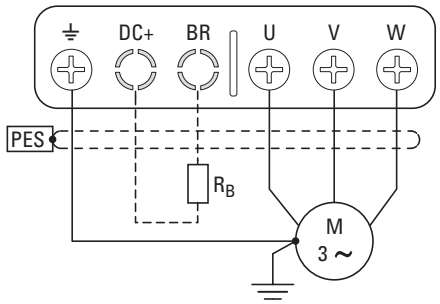	Motor connection for three-phase motors: (motor voltage = supply voltage) • DA1-12… • DA1-32… • DA1-34… • DA1-35… optional: internal or external braking resistance (R_B)

→ DC+ and DC- for DC link coupling or if the device is being supplied with DC voltage.
To do this, the terminal screw cover needs to be knocked out.

3.6.1.2 Connection for frame sizes FS4 to FS7 with IP55

On enclosures with an IP55 degree of protection (frame sizes FS4 to FS7), the connection area will be located behind the lower enclosure cover.

Sizes FS4 and FS5

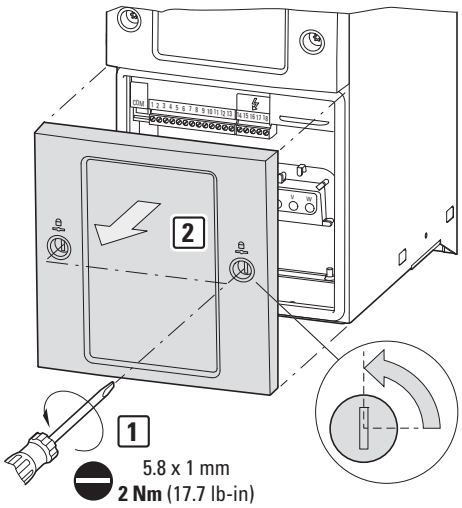

Figure 56:Removing the cover

Release the latches by turning them counterclockwise (90 degrees) so that they are in a vertical position [1] and lift the cover off towards you [2].

Sizes FS6 and FS7

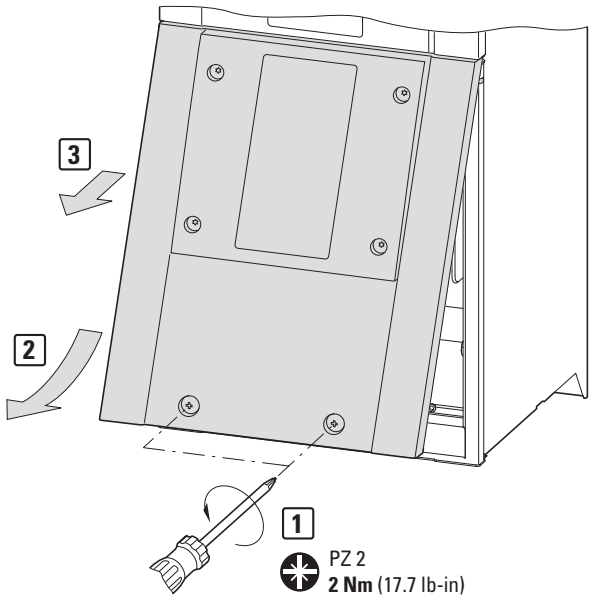

Figure 57:Removing the cover

Unscrew the two screws at the bottom [1], lift the cover from the bottom [2], and then remove it towards you

→ The upper edge of this cover is inserted into the upper enclosure cover from below.

The connection cables need to be brought in from below. To do this on these frame sizes (FS4 to FS7), the cover at the bottom (above the device fan) needs to be removed.

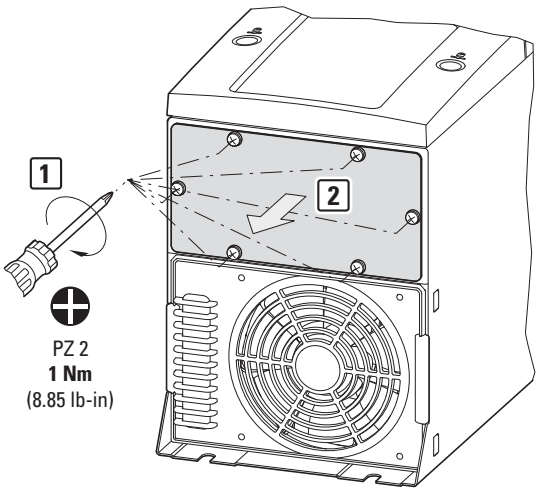

Figure 58:Remove the blanking plate

Unscrew the screws (six/eight) [1] and remove the blanking plate [2].

Table 8: Connection terminals (FS4, FS5)

Description		
Connection with three-phase supply voltage: • DA1-32… (200 - 240 V) • DA1-34… (380 - 480 V) • DA1-35… (500 - 600 V)	internal or external braking resistance (R_B, optional)	Connection for three-phase motors (motor voltage = supply voltage)

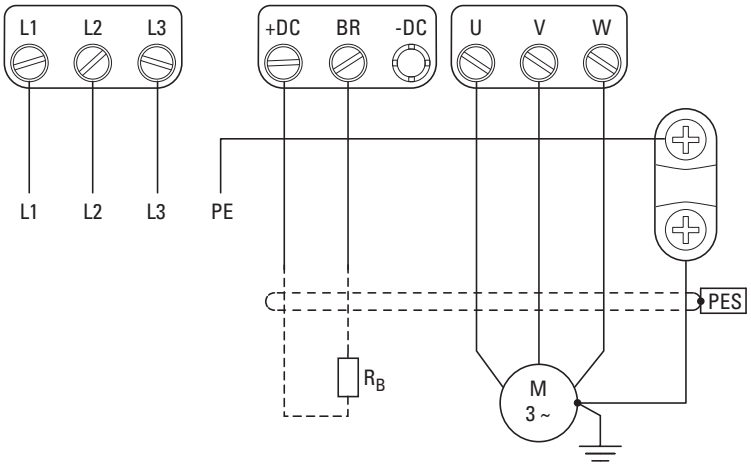

Figure 59:Connection terminals for FS4 and FS5

→ PE earthing connection with ring terminals on the right side.

Terminals +DC and -DC have the same function as terminals DC+ and DC-.

Table 9: Terminal bolt (FS6, FS7)

Description		
Connection with three-phase supply voltage: • DA1-32… (200 - 240 V) • DA1-34… (380 - 480 V) • DA1-35… (500 - 600 V)	external braking resistance (R_B, optional)	Connection for three-phase motors (motor voltage = supply voltage)

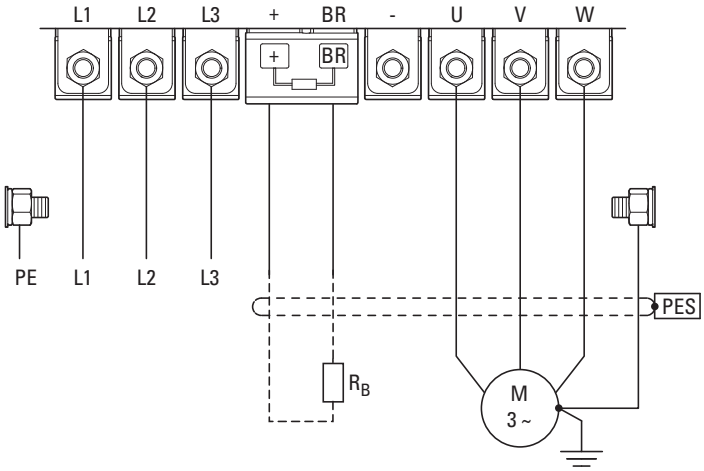

Figure 60:Terminal bolt for FS6 and FS7

The PE earthing connection is made with ring terminals and the bolts on the left and right sides of the enclosure.

The terminal bolts for an external brake resistor are located under the cover marked with + and BR.

Stud terminal + has the same function as terminal DC+.

If the device is installed in a control panel, the lower blanking plate and the front enclosure cover must not be installed. Without the cover, the DA1 variable frequency drive will have an IP40 degree of protection.

3.6.1.3 Terminal bolts on frame size FS8 (IP20)

On FS8 DA1 variable frequency drives, the connection area inside the power section will be covered by a blanking plate at the bottom of the enclosure. In order to open it, you will need to unscrew six screws [1].

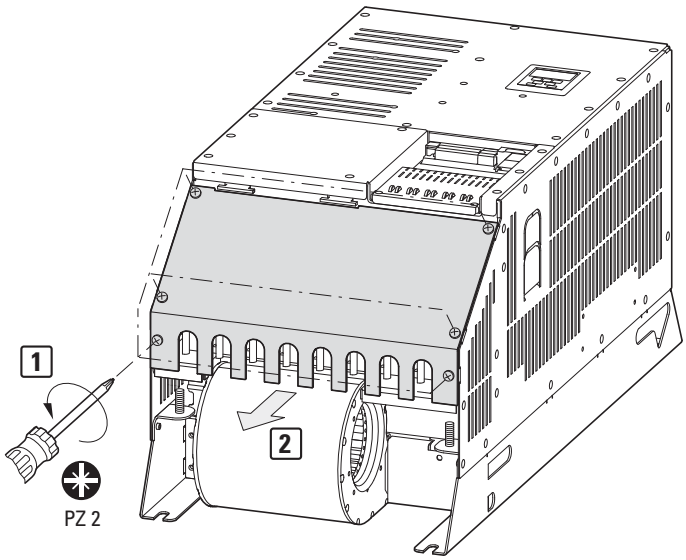

Figure 61:Remove the blanking plate

Table 10: Terminal bolt (FS8)

Description		
Connection with three-phase supply voltage: • DA1-34… (380 - 480 V)	external braking resistance (R_B, optional)	Connection for three-phase motors (motor voltage = supply voltage)

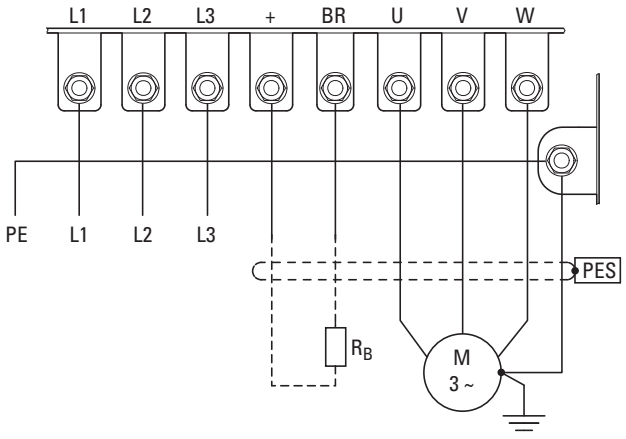

Figure 62:Terminal bolt for FS8

The PE earthing connection is made with ring terminals and the bolts on the right side.

→ Stud terminal + has the same function as terminal DC+.

3.6.1.4 Connection terminals on frame sizes FS2 and FS3 with IP66

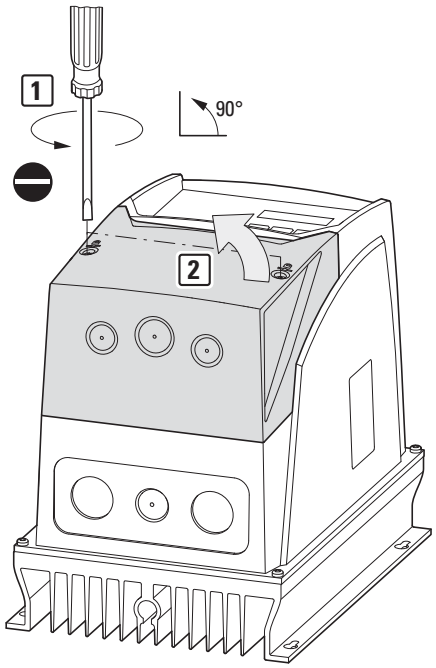

On FS2 and FS3 frame sizes with an IP66 degree of protection, the connection area is located behind the lower enclosure cover. To open the cover, release the two latches by turning them counterclockwise (90 degrees) so that they are in a vertical position [1].

Once the latches are released, you can lift the cover off towards you [2].

Figure 63:Remove enclosure cover (IP66)

Table 11: Connection terminals (FS2, FS3)

Connection terminals	Description
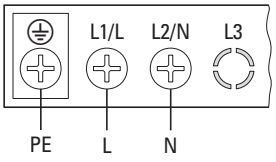	Connection with single-phase supply voltage • DA1-12… (200 - 240 V)
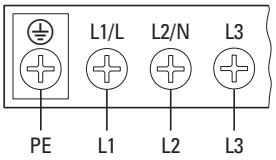	Connection with three-phase supply voltage: • DA1-32… (200 -240 V) • DA1-34… (380 - 480 V) • DA1-35… (500 - 600 V)
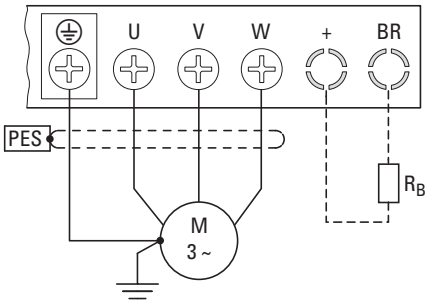	Motor connection for three-phase motors: (motor voltage = supply voltage) optional: External braking resistance (R_B)

→ Terminal + has the same function as terminal DC+.

3.6.1.5 Stripping lengths and tightening torques

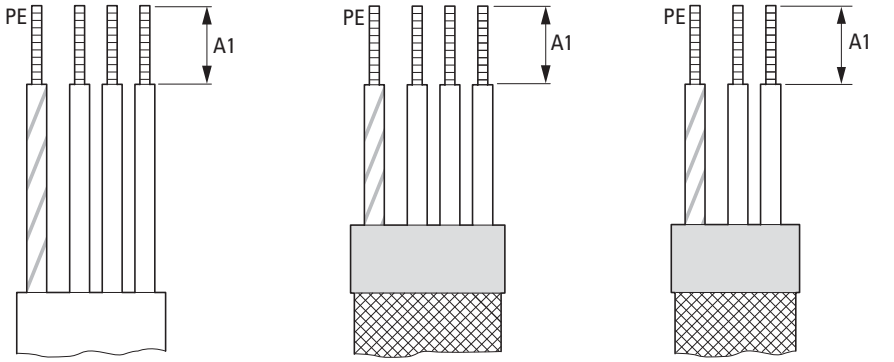

Figure 64:connection cables

Mains = Electrical supply system (mains voltage),
Motor = Motor connection,
DC-Link = internal DC link,
Brake Resistor = Braking resistance

Table 12: Stripping lengths in the power section

Frame size (degree of protection)	A1 mm (in) mm (in)	Tightening torque Nm (lb-in)
FS2 (IP20)	8 (0.3)	1 (8.85)
FS3 (IP20)	8 (0.3)	1 (8.85)
FS2 (IP66)	10 (0.39)	1.5 (15)
FS3 (IP66)	10 (0.39)	1.5 (15)
FS4	15, space unit = ring-cable ferrule	4 (35.4)
FS5	15, space unit = ring-cable ferrule	15 (98.2)
FS6	Ring-cable ferrule	20 (177)
FS7	Ring-cable ferrule	20 (177)
FS8	Ring-cable ferrule	57 (504, 49)

Table 13: Openings (FS2, FS3)

Frame size	Control section	Power part	Metric gland for hole size
FS2	2 x 21 mm 1 x 25.5 mm	3 x 21 mm	M20 with 21 mm M25 with 25.5 mm
FS3	2 x 21 mm 1 x 25.5 mm	1 x 21 mm 1 x 25.5 mm (open)	M20 with 21 mm M25 with 25.5 mm

3.6.1.6 Connecting the motor cable

The screened cables between the variable frequency drive and the motor should be as short as possible.

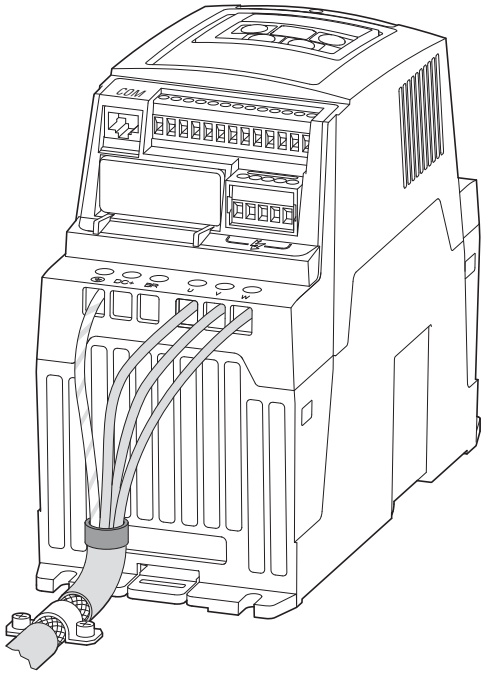

Figure 65:Connection on motor side

- Connect the screening, on both sides and across a large area (360° overlap), to the protective earth (PE) ⏚. The power screening's protective earth (PES) connection should be in the immediate proximity of the variable frequency drive.and directly on the motor terminal box.
- Prevent the screen earth kit from becoming unbraided, i.e. by pushing the separated plastic covering over the end of the shielding or with a rubber grommet on the end of the shielding. Terminate the cable screen across a large area at the end (PES).
  Alternatively, you can twist the screen braid and connect it to the protective earth with a cable lug. In order to prevent EMC interference, this twisted screen connection should be as short as possible (recommended value for the twisted cable screen: b ≧ 1/5 a).

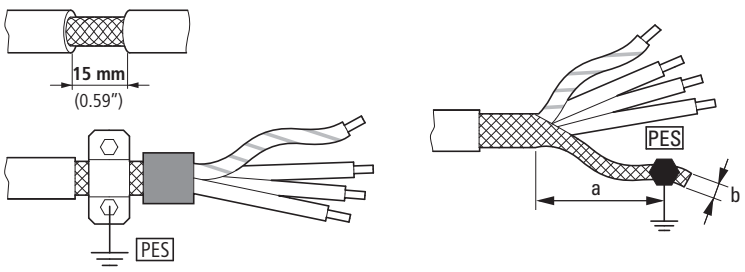

Figure 66:Screened connection cable in motor circuit

Screened, four-wire cable is recommended for the motor cables. The green-yellow line of this cable connects the protective ground connections from the motor and the variable frequency drive and therefore minimizes the equalizing current loads on the screen braid.

The following figure shows the construction of a four-wire, screened motor line (recommended specifications).

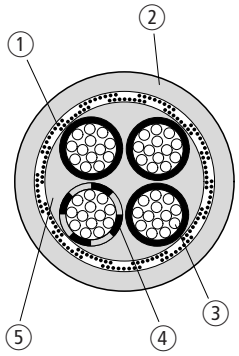

Figure 67:Four-core screened motor supply cable

① Cu shield braid
② PVC outer casing
③ Drain wire (copper strands)
④ PVC core insulation, 3 x black, 1 x green–yellow
⑤ Textile and PVC fillers

If there are additional subassemblies in a motor feeder (such as motor contactors, overload relays, motor chokes, sine filters or terminals), the shielding of the motor cable can be interrupted close to these subassemblies and connected to the mounting plate (PES) with a large area connection. Free or non-shielded connection cables should not be any longer than about 300 mm.

3.6.1.7 Cable glands on IP55 and IP66

In the case of applications requiring for a variable frequency drive to be installed inside buildings or systems but outside a control panel, cable glands can be used with DA1 variable frequency drives with an IP55 or IP66 degree of protection in order to establish an optimal connection.

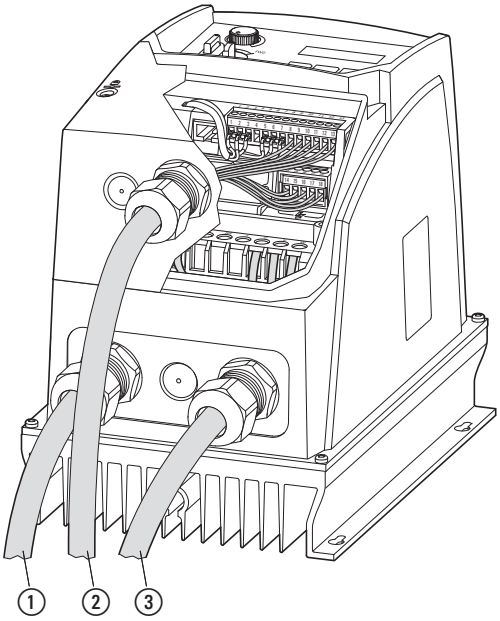

Figure 68:Openings with cable glands (IP66)

① Mains connection (supply voltage)
② Control and signal cables
③ Motor connection (screened cable with metal cable gland)

The lower metal section already comes with openings for the cable glands to the power section.

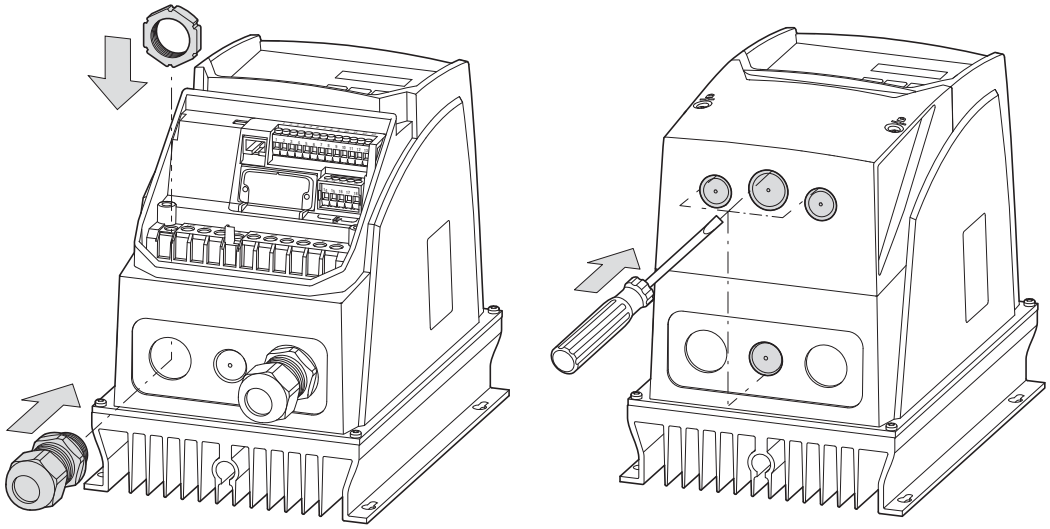

Figure 69:Openings for cable glands with IP66 degree of protection

Table 14: Openings for cable glands (FS2, FS3)

Frame size	Control section	Power part	Metric gland for hole size
FS2	2 x 21 mm 1 x 25.5 mm	3 x 21 mm	M20 with 21 mm M25 with 25.5 mm
FS3	2 x 21 mm 1 x 25.5 mm	1 x 21 mm 1 x 25.5 mm (open)	M20 with 21 mm M25 with 25.5 mm

→ Make sure that the cable glands have at least an IP66 degree of protection.

The EMC cable gland must be earthed properly – e.g., with a metal lock nut that is then connected to the PE terminal.

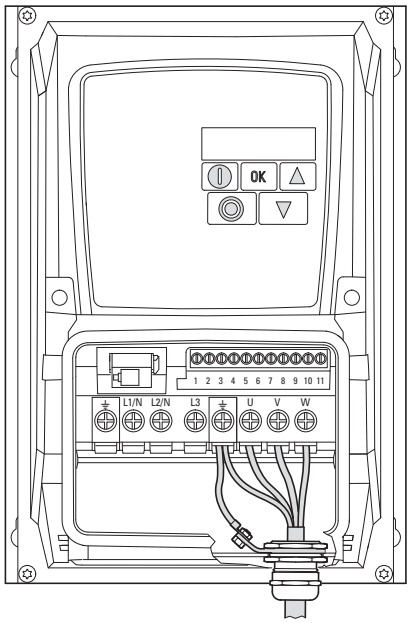

Figure 70:Grounding the EMC cable gland (IP66)

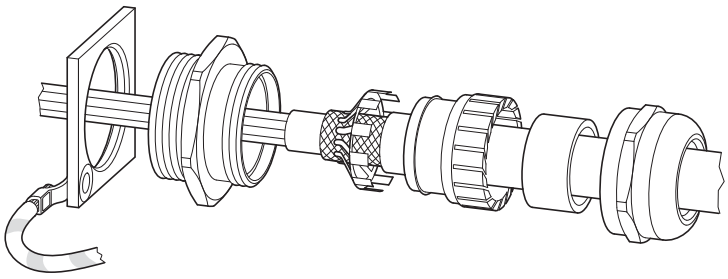

Figure 71:Example: diagram of EMC gland assembly

In devices with an IP55 degree of protection (frame sizes FS4 to FS7), the blanking plates (→ Figure 72) have three locating points for individual opening diameters. In order to have an installation that meets EMC requirements, the metal stud on this blanking plate must be connected to the enclosure's PE/earthing connection.

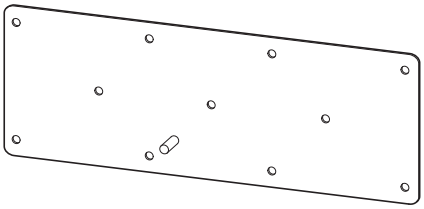

Figure 72:Blanking plate (FS6, FS7) with locating points and earthing stud

→ On frame sizes FS4 and FS5, the equipment supplied includes a second blanking plate with three openings in addition to the solid blanking plate that comes already installed.

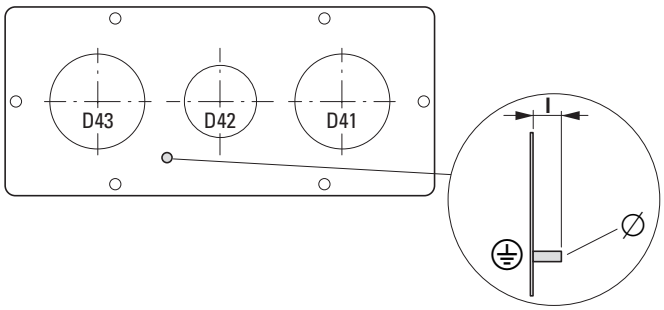

Figure 73:Blanking plate with openings and earthing stud (FS4, FS5)

Table 15: Openings (FS4, FS5)

Frame size	D41 mm (in)	D42 mm (in)	D43 mm (in)	l mm (in)	∅
FS4	40.5 (1.59) M40	25.5 (1) M25	40.5 (1.59) M40	10 (0.35)	M4
FS5	50.5 (1.99) M50	25.5 (1) M25	50.5 (1.99) M50	18 (0.71)	M6

3.6.2 Connection on control section

The connection to the control section is made using the plug-in connection terminals:

- Terminals 1, 5, 7, 9: for the internal power supply,
- Terminals 2, 3, 4, 6, 10: for digital and analog input signals,
- Terminals 8, 11: for a digital or analog output signal,
- Terminals 14, 15, 16, 17, 18: for dry relay outputs
- Terminals 12, 13: for the STO inputs

The 13-terminal and 5-terminal strips have a plug-in design.
On devices with an IP20 degree of protection (FS2, FS3, FS8), the control signal terminals are mounted on the front; on devices with an IP55 (FS4 to FS7) or IP66 degree of protection, they are mounted under the enclosure cover.

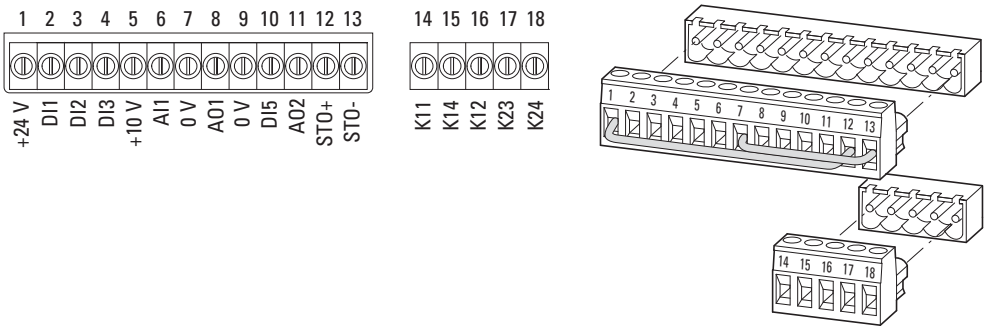

Figure 74:Plug-in control signal terminal designations

ESD measures
Discharge yourself on a grounded surface before touching the control signal terminals and the circuit board to prevent damage through electrostatic discharge.

3.6.2.1 Terminal capacity

The connection terminals' layout depends on the size of the power section. The cross-sections to be used in the connections and the tightening torques for screws are listed in the following.

Table 16: Control signal terminal dimensions

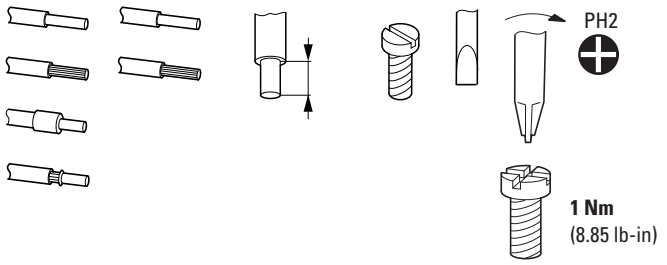

Frame size	mm²	AWG	mm	in	Nm	mm
FS2, …, FS8	0.2 - 2.5	24 - 12	8	0.31	0.5	0.6 x 3.5

3.6.2.2 Connection data and functions

The functions that are set in the ex-factory and the electrical connection data of the control signal terminals are listed in the following table.

Table 17: Factory-set functions of the control terminals

Terminal		Signal	Description	Default settings (P1-12 = 0, P1-13 = 11)[1]
1	+24 V	Control voltage for DI1 - DI5, output (+24 V)	Maximum load 100 mA, Reference potential 0 V	(= Input for external control voltage, +24 VDC, reference potential at terminal 7 or 9)
2	DI1	Digital input 1	8 - +30 V (High, R_i > 6 kΩ)	FWD (clockwise rotating field enable)
3	DI2	Digital Input 2	8 - +30 V (High, R_i > 6 kΩ)	REV (anticlockwise rotating field enable)
4	DI3	Digital Input 3	8 - +30 V (High, R_i > 6 kΩ)	Select AI1 REF/f-Fix (used to change the setpoint source from analog input 1 to fixed frequency)
5	+10 V	Reference voltage, Output (+10 V)	Maximum load 10 mA Reference potential 0 V	–
6	AI1 DI4	Analog input 1 Digital Input 4	• Analog: 0 - +10 V (R_i > 72 kΩ) 0/4 - 20 mA (R_B = 500 Ω) Can be switched with parameter P2-30 • digital: 8 - 30 V (high)	Select f-Fix Bit0 (used to select the fixed frequency setpoints for Bit0: f-Fix1 = 5 Hz (P2-01))
7	0 V	Reference potential	0 V = connection terminal 9	–
8	AO1 DO1	Analog output 1 Digital output 1	• analog: 0 - +10 V maximum 20 mA can be switched with parameter P2-11 • digital: 0 - +24 V	Output frequency f-Out (P2-11 = 8, ADO1 function & mode)
9	0 V	Reference potential	0 V = connection terminal 7	–
10	DI5 AI2	Digital Input 5 Analog input 2	• digital: 8 - 30 V (high) • Analog: 0 - +10 V (R_i > 72 kΩ) 0/4 - 20 mA (R_B = 500 Ω) Can be switched with parameter P2-33	Select f-Fix Bit0
11	AO2 DO2	Analog output 2 Digital output 2	• analog: 0 - +10 V maximum 20 mA can be switched with parameter P2-13 • digital: 0 - +24 V	Output current A-Out (P2-13 = 9, ADO2 function & mode)
12	STO+	Safe Torque Off +	Enable = +24 V	→ Section 2.10, „STO function", page59
13	STO-	Safe Torque Off -	Enable = 0 V	
14	K11	Relay 1, changeover contact	Maximum switching load: 250 V AC/6 A or 30 V DC/5 A	(common connection for N/C and N/O)
15	K14	Relay 1, N/O (changeover contact)	Maximum switching load: 250 V AC/6 A or 30 V DC/5 A	Closed = No fault message
16	K12	Relay 1, N/C (changeover contact)		Closed = No 24 V control voltage or fault message (Error)
17	K23	Relay 2, N/O contact	Maximum switching load: 250 V AC/6 A or 30 V DC/5 A	Closed = RUN operating signal
18	K24	Relay 2, N/O contact		

1) Configurable function: Manual MN04020006Z-EN describes the functions and modes for the configurable control signal terminals.

3.6.2.3 STO terminals

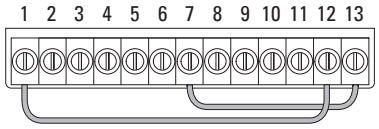

Figure 75:STO control signal terminals (direct enable)

Control signal terminal 12 (STO+) must always be connected to +24 V and control signal terminal 13 (STO-) must always be connected to 0 V (reference point for +24 V)!

If a control voltage (24 VDC) is not connected to control signal terminals 12 and 13, the control section and the inverter will remain disabled.
"Inhibit" will be displayed.

3.6.2.4 Connection example

The control cables should be screened and twisted. The screening is applied on one side in the proximity of the variable frequency drive (PES).

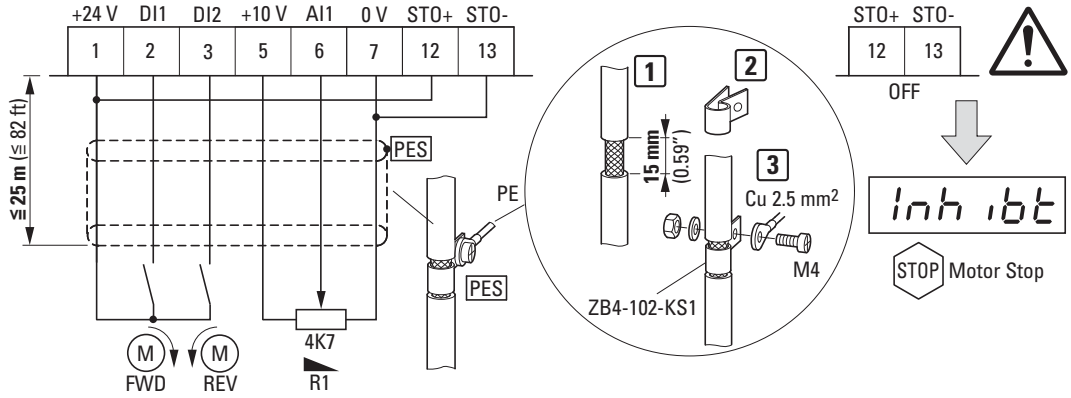

Figure 76:Simple connection example

Prevent the shielding from becoming unbraided, i.e. by pushing the separated plastic covering over the end of the shielding or with a rubber grommet on the end of the shielding.

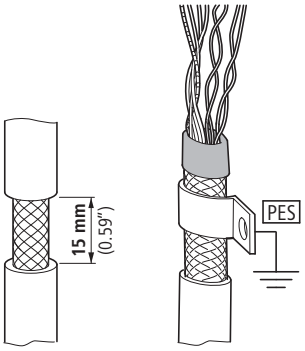

Figure 77:Preventing the screening from becoming unbraided

Alternatively, in addition to the broad area cable clip, you can also twist the shielding braid at the end and connect to the protective ground with a cable lug. To prevent EMC disturbance, this twisted shielding connection should be made as short as possible.

Prevent the screen from becoming unbraided at the other end of the control cable, e.g. by using a rubber grommet. The shield braid must not make any connection with the protective ground here because this would cause problems with an interference loop.

3.6.2.5 Digital Input Signals

Control signal terminals 2, 3, 4, 6 and 10 all have the same function and mode of operation as digital inputs (DI1 to DI5).

A logic level of +24 V (positive logic) is used:

- 8 - +30 V = High (logic "1")
- 0 - +4 V = Low (logic "0")
- Input current: ~ 4 mA
- Signal common 0 V (control signal terminal 7 or 9)

The internal control voltage from control signal terminal 1 (+24 V) or an external voltage source (+24 V) can be used for this.

By default (with the unit as supplied), the control signal terminals for the digital input signals will be assigned as follows:

- Control signal terminal 2 as digital input 1 (DI1) = FWD (clockwise rotating field enable signal)
- Control signal terminal 3 as digital input 2 (DI2) = REV (counterclockwise rotating field enable signal)
- Control signal terminal 4 as digital input 3 (DI3) = Used to switch from f-Set to fixed frequency (f-Fix1, f-Fix2)
- Control signal terminal 6 as analog input 1 (AI1) = f-Set analog setpoint
- Control signal terminal 10 as digital input 5 (DI5), can be switched between f-Fix1 and f-Fix2.

→ The setting (digital/analog) for terminals 6 and 10 will be configured automatically based on the value set for P1-13.

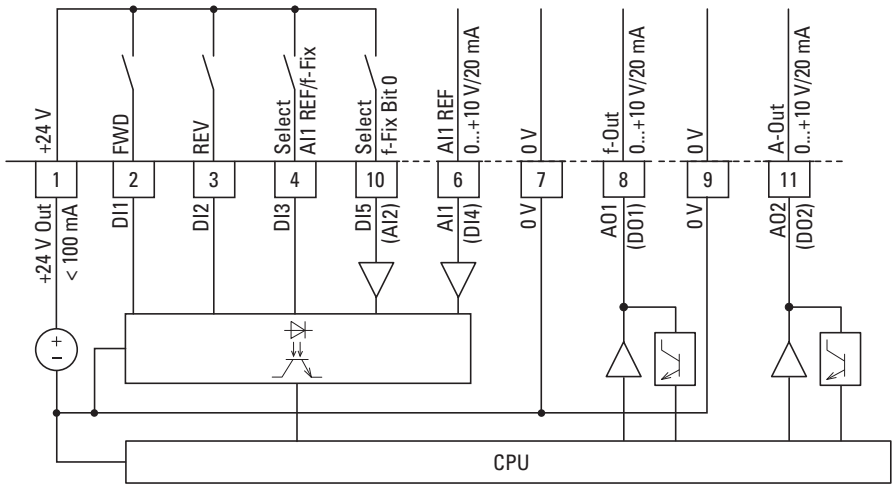

Figure 78:Control signal terminals (digital / analog)

3.6.2.6 Analog input signals

Depending on how parameters P1-12 and P1-13 are set, control signal terminals 6 (AI1) and 10 (AI2) can be connected to analog signals (→ Figure 78):

- 0 - +10 V
- 0 - 10 V with scaling and operating direction change
- 0 - 20 mA
- 4 - 20 mA or 20 - 4 mA with open-circuit monitoring (< 3 mA)

→ Control signal terminals 7 and 9 are the common 0 V reference potential for all analog and digital signals.

3.6.2.7 Analog output signal

Analog signals are available at control signal terminals 8 and 11 (→ Figure 78). These outputs can handle a maximum load of 20 mA. The output signals can be selected using parameters P2-11 (AO1) and P2-13 (AO2). Parameters P2-12 (AO1) and P2-14 (AO2) are used to configure the formats for the analog inputs:

Parameter value	Output signal
0	0 - 10 V
1	10 - 0 V
2	0 - 20 mA
3	20 - 0 mA
4	4 - 20 mA
5	20 - 4 mA

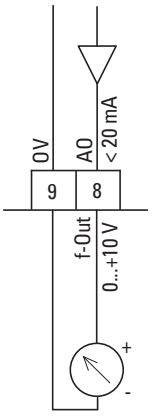

Figure 79:Analog output (AO) (connecting example)

→ Control signal terminals 7 and 9 are the common 0 V reference potential for all analog and digital signals.

By default, the speed/frequency (AO1) and the output current (AO2) will be displayed.

3.6.2.8 Digital output (Transistor)

Control signal terminals 8 and 11 (→ Figure 78) are configured as analog outputs (AO) by default. Parameters P2-11 and P2-13 can be used to configure them as digital outputs (DO) instead.

Transistor outputs DO1 (terminal 8) and DO2 (terminal 11) switch the internal device control voltage (+24 V) as a digital signal. The maximum permissible load current is 20 mA.

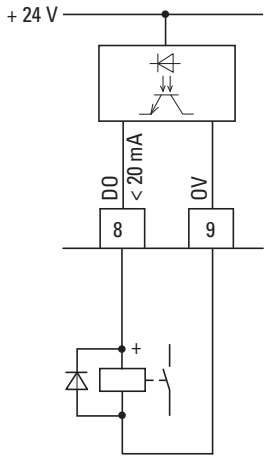

Figure 80:Connection example (interposing relay with free-wheeling diode: ETS4-VS3; article no. 083094)

→ Control signal terminals 7 and 9 are the common 0 V reference potential for all analog and digital output signals.

3.6.2.9 Relay output

DA1 variable frequency drives feature two relays with dry contacts.

Relay K1:
Control terminals 14 (changeover contact), 15 (N/O), and 16 (N/C)
Default setting: 1 = Ready for operation/fault (Error)

Relay K2:
Control signal terminals 17 and 18 (N/O)
Default setting: 0 = Drive running (RUN)

The relay function can be configured using parameters P2-15 and P2-18.

The electrical connection specifications for control signal terminals or relay contacts are:

- 250 V AC, max. 6 A
- 30 V DC, max. 5 A

We recommend connecting any connected loads as follows:

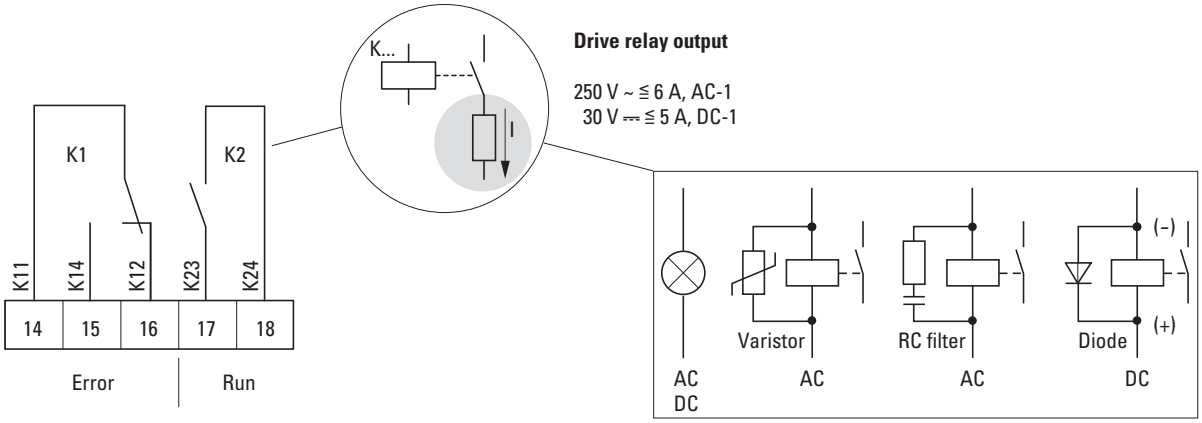

Figure 81:Connection examples with suppressor circuit

3.6.2.10 External control voltage

An external power supply unit can be used to supply the DA1 variable frequency drive's control section with 24 V DC.

DA1	External control voltage
Terminal 1	+24 V
Terminal 7, 9	0 V

The external control voltage (+24 V) should be able to handle a load of at least 100 mA. This external control voltage's residual ripple must be smaller than ±5 % of $\Delta U_a/U_a$.

If the control section is powered with an external power supply unit, the control section, the control signal terminals, and the RJ45 interface will be active.

You will be able to do the following:

- Change parameters (but not save them)
- Read readings and error registers
- Address and read parameters via the RJ45 interface, the drivesConnect parameter configuration program, field buses, and SmartWire-DT.
- Control control level functions without the power section being powered.

3.6.2.11 RJ 45 interface

The RJ45 interface on the DA1 variable frequency drive makes it possible to connect directly to communication modules and fieldbus connections.

The internal RS485 connection handles transmissions for the OP bus, Modbus RTU, and CANopen field bus systems.

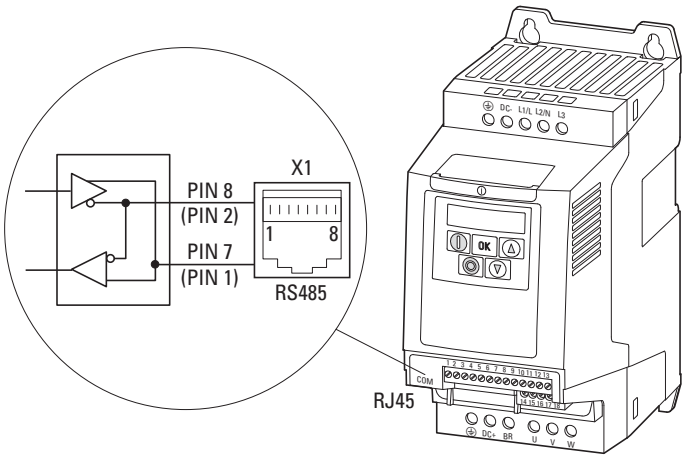

Figure 82:RJ45 interface (example: location on FS2 frame size)

→ DA1 variable frequency drives do not have an internal bus termination resistor – use EASY-NT-R if necessary.

3.6.2.12 IP66, control signal terminals (DA1-…-A6SC)

On DA1 variable frequency drives with an IP66 degree of protection and local controls (DA1-…A6SC), the control signal terminals will be partially wired.

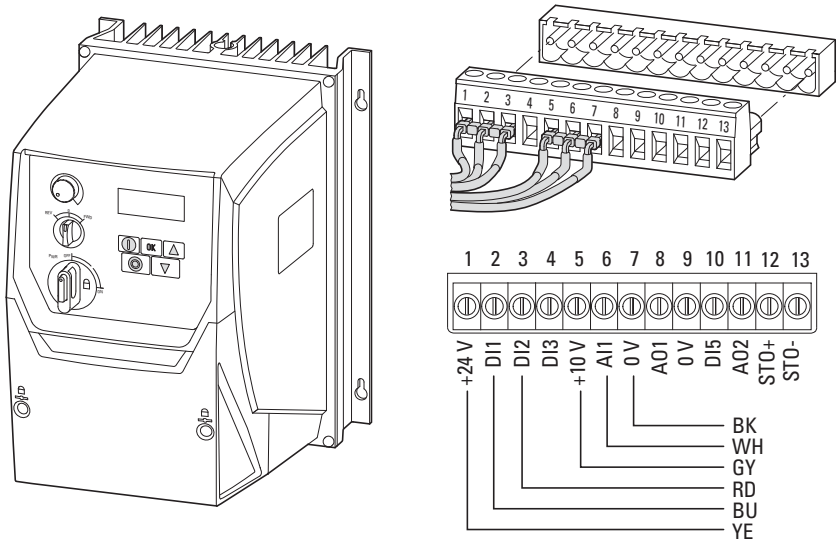

Figure 83:DA1-…-A6SC (factory connection)

When supplied, the control signal terminals will be connected as follows:

Table 18: Configuration of the control signal terminals

Terminal	Color	Function
1	YE (yellow)	+24 V to FWD/REV selector switch
2	BU (blue)	From selector switch = FWD
3	RD (red)	From selector switch = REV
5	GY (gray)	+10 V to potentiometer
6	WH (white)	From potentiometer = f-Set
7	BK (black)	From potentiometer = 0 V

→ For the enable signal for operation, you will also need to install an insulated wire jumper from terminal 1 to terminal 12 (STO+) and a link from terminal 13 (STO-) to terminal 9 or 7 (→ Figure 74, page 104).

3.7 Block diagrams

The following block diagrams show all the connection terminals on a DA1 variable frequency drive and their functions when in their default settings.



An external 24 V power supply can be connected to control signal terminals 1 (+24 V) and 7 or 9 (0 V).

3.7.1 DA1-12…

Mains voltage U_{LN}: single-phase, 200 (-10 %) - 240 (+10 %) V, 50/60 Hz

Motor voltage U_2: 3-phase, $U_2 = U_{LN}$, 0 - 50/60 Hz (max. 500 Hz)

Frame size: FS2 with IP20 degree of protection

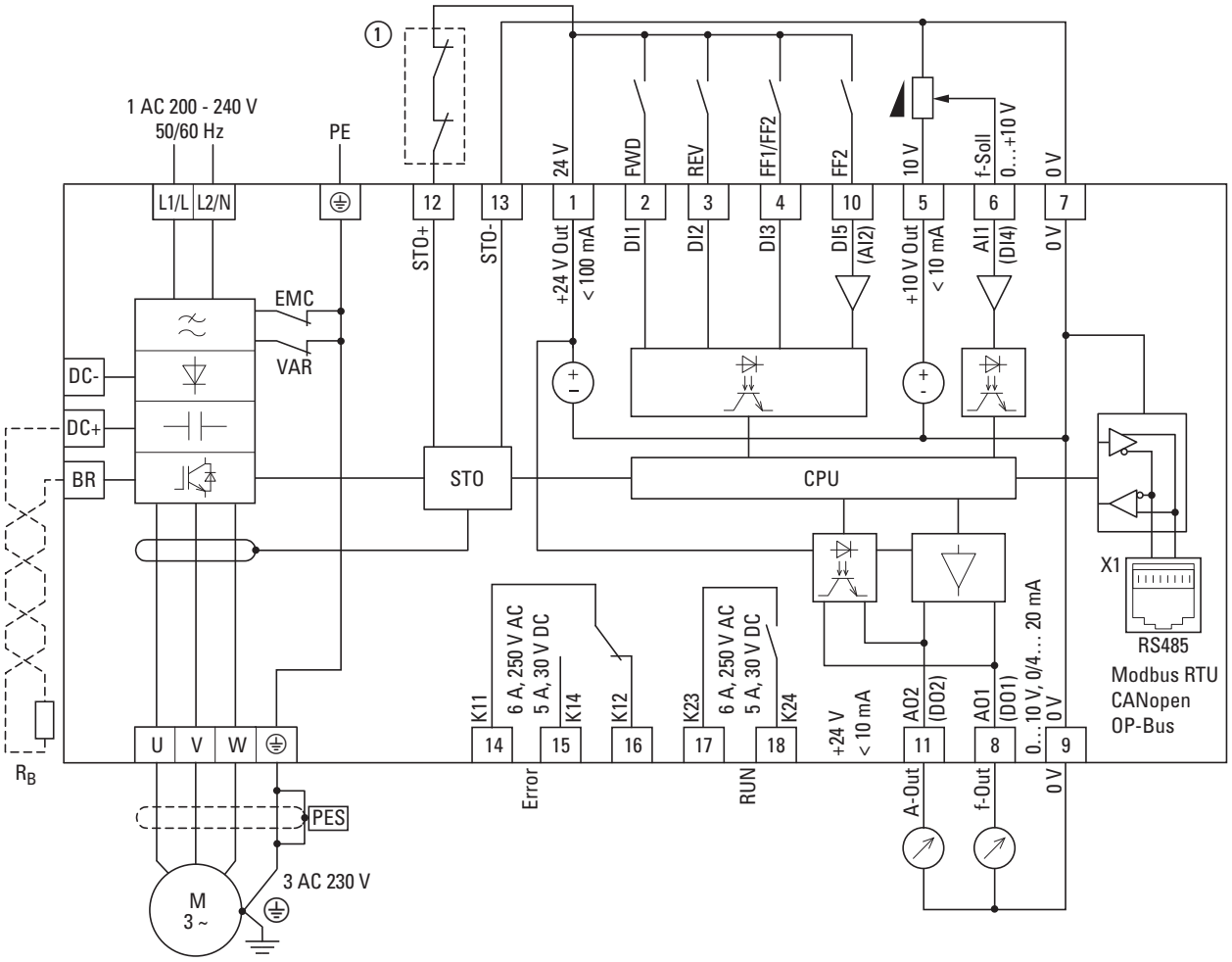

Figure 84:Block diagram DA1-12…

① Relay: Safe Torque Off (STO), SIL 2 (EN 61800-5-2)

3.7.2 DA1-32…-A20C, DA1-34…-A20C

Mains voltage U_{LN}:

DA1-32…: 3-phase, 200 (-10 %) - 240 (+10 %) V, 50/60 Hz

DA1-34…: 3-phase, 380 (-10 %) - 480 (+10 %) V, 50/60 Hz

Motor voltage U_2: 3-phase, $U_2 = U_{LN}$, 0 - 50/60 Hz (max. 500 Hz)

Frame size: FS2 and FS3 with IP20 degree of protection

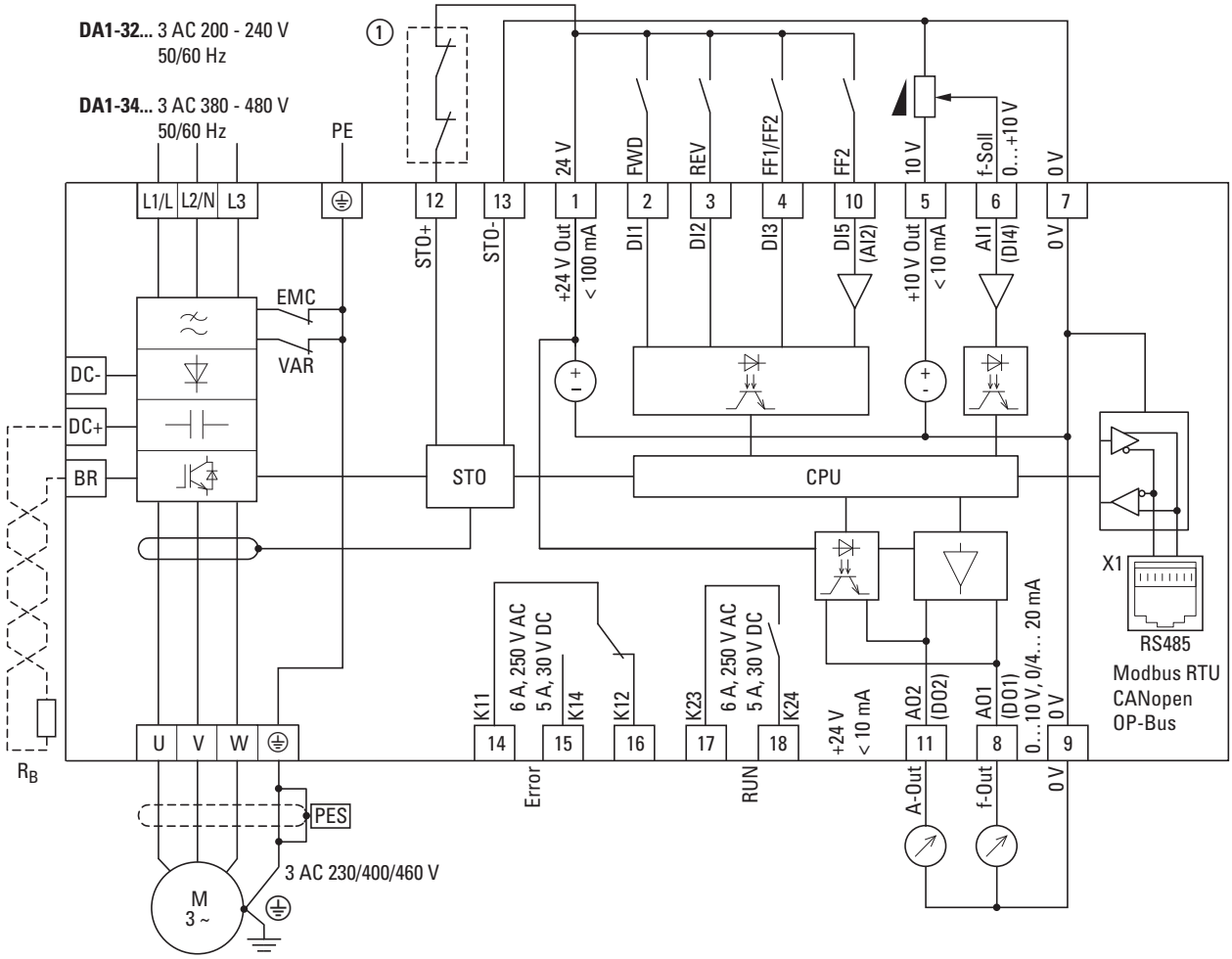

Figure 85:Block diagram for DA1-32…, DA1-34…, FS2 and FS3 frame sizes

① Relay: Safe Torque Off (STO), SIL 2 (EN 61800-5-2)

3.7.3 DA1-32…-B55C, DA1-34…-B55C, FS4 frame size

Mains voltage U_{LN}:

DA1-32…: 3-phase, 200 (-10 %) - 240 (+10 %) V, 50/60 Hz

DA1-34…: 3-phase, 380 (-10 %) - 480 (+10 %) V, 50/60 Hz

Motor voltage U_2: 3-phase, $U_2 = U_{LN}$, 0 - 50/60 Hz (max. 500 Hz)

Frame size: FS4 with IP55 degree of protection

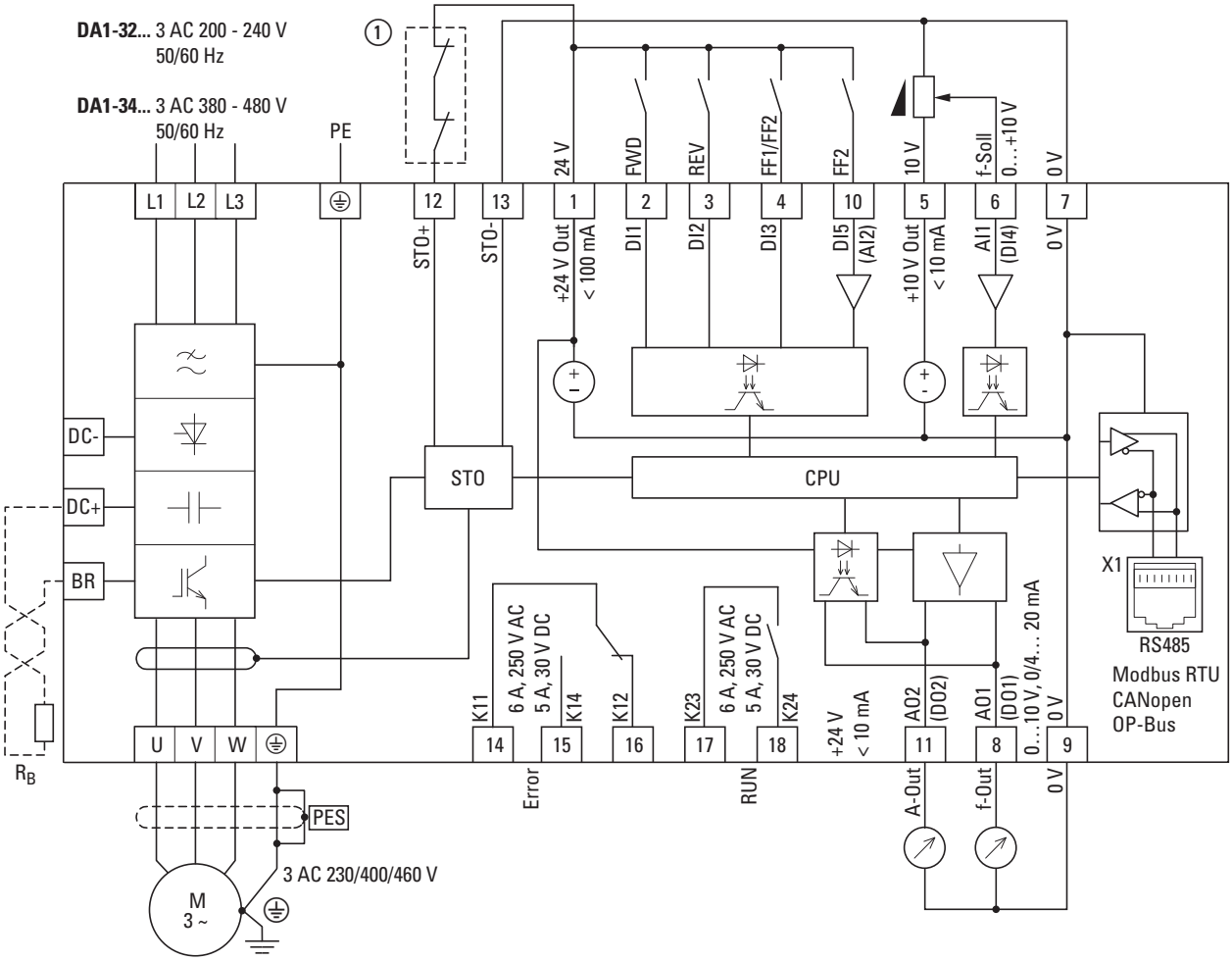

Figure 86:Block diagram for DA1-32…, DA1-34…, FS4 frame size

① Relay: Safe Torque Off (STO), SIL 2 (EN 61800-5-2)

3.7.4 DA1-32…-B55C, DA1-34…-B55C, FS5, FS6, FS7 frame sizes

Mains voltage U_{LN}:

DA1-32…: 3-phase, 200 (-10 %) - 240 (+10 %) V, 50/60 Hz

DA1-34…: 3-phase, 380 (-10 %) - 480 (+10 %) V, 50/60 Hz

Motor voltage U_2: 3-phase, $U_2 = U_{LN}$, 0 - 50/60 Hz (max. 500 Hz)

Frame size: FS5, FS6 and FS7 with IP55 degree of protection

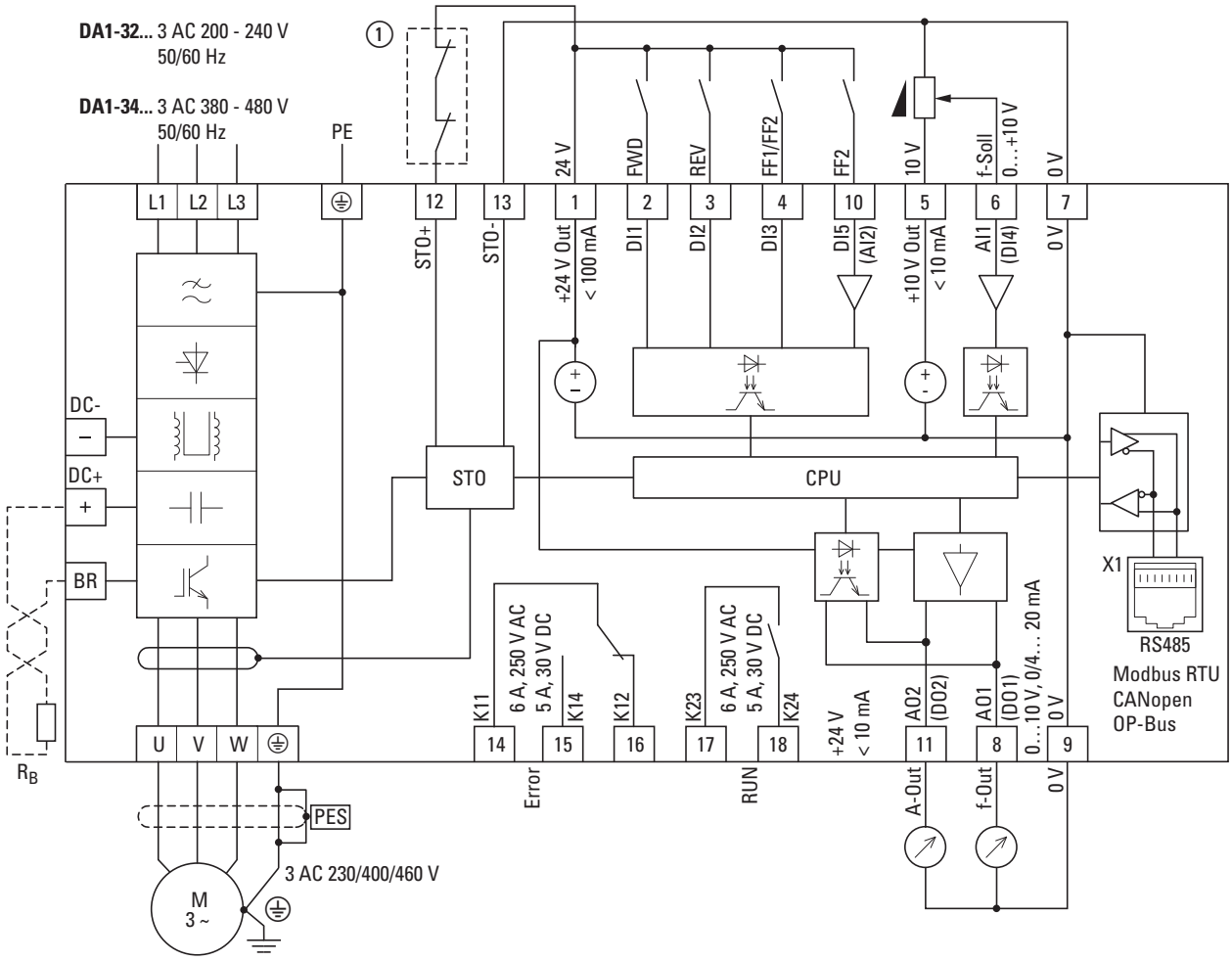

Figure 87:Block diagram DA1-32…, DA1-34…

① Relay: Safe Torque Off (STO), SIL 2 (EN 61800-5-2)

3.7.5 DA1-34370…, DA1-34450…

Mains voltage U_{LN}: 3-phase, 380 (-10 %) - 480 (+10 %) V, 50/60 Hz

Motor voltage U_2: 3-phase, $U_2 = U_{LN}$, 0 - 50/60 Hz (max. 500 Hz)

Frame size: FS8 with IP20 degree of protection

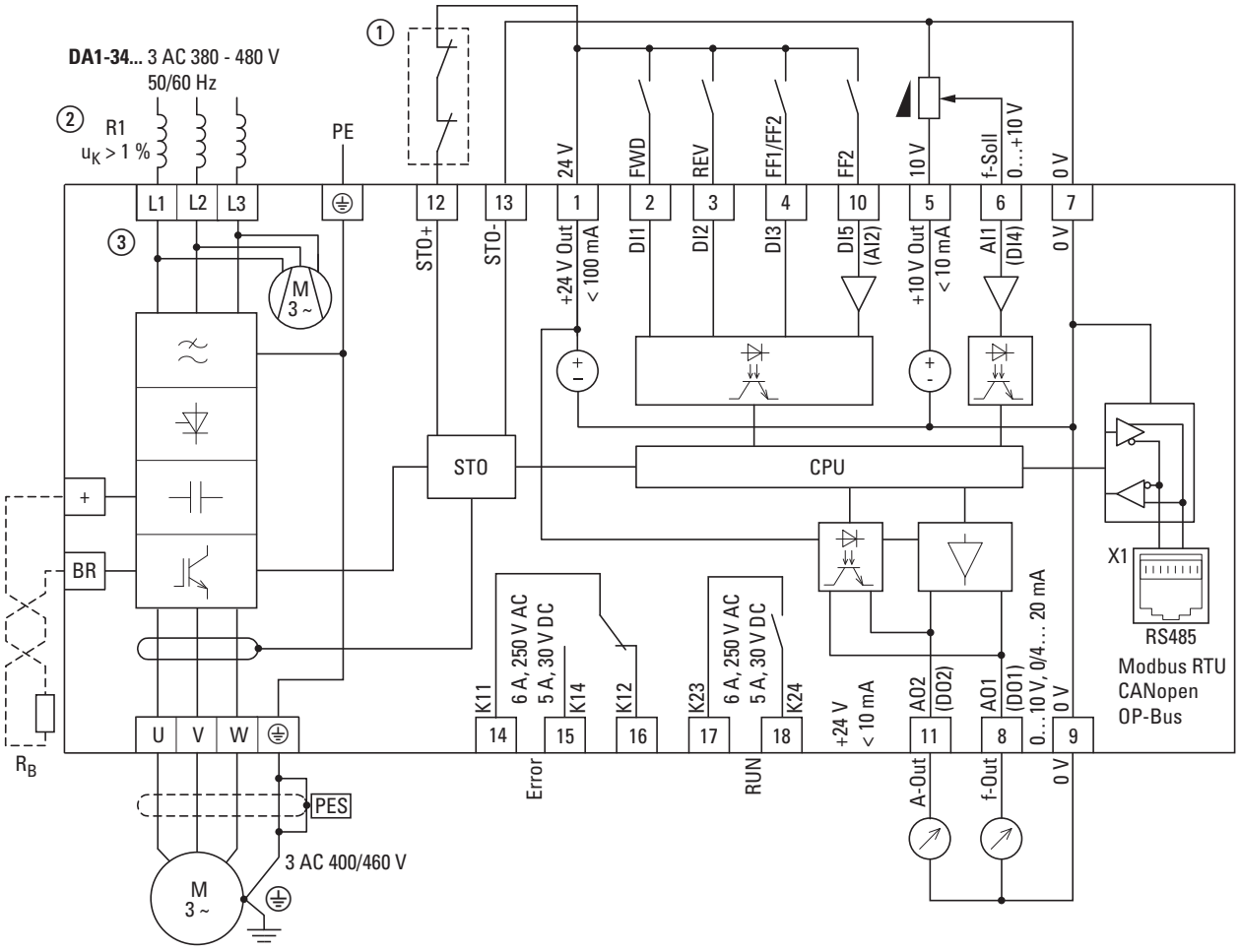

Figure 88:DA1-34… block diagram in frame size FS8

① Relay: Safe Torque Off (STO), SIL 2 (EN 61800-5-2)

② If it is not guaranteed that the system percentage impedance is greater than or equal to 1%, a mains choke must be connected. Your u_K value should fall between 1 and 4%.

③ Check the L1–L2–L3 phase sequence (rotating field direction). If the phase sequence is wrong, the *FAn-F* fault message will be displayed.

3.7.6 DA1-35…-A20C

Mains voltage U_{LN}: 3-phase, 500 (-10 %) - 600 (+10 %) V, 50/60 Hz

Motor voltage U_2: 3-phase, $U_2 = U_{LN}$, 0 - 50/60 Hz (max. 500 Hz)

Frame size: FS2 and FS3 with IP20 degree of protection

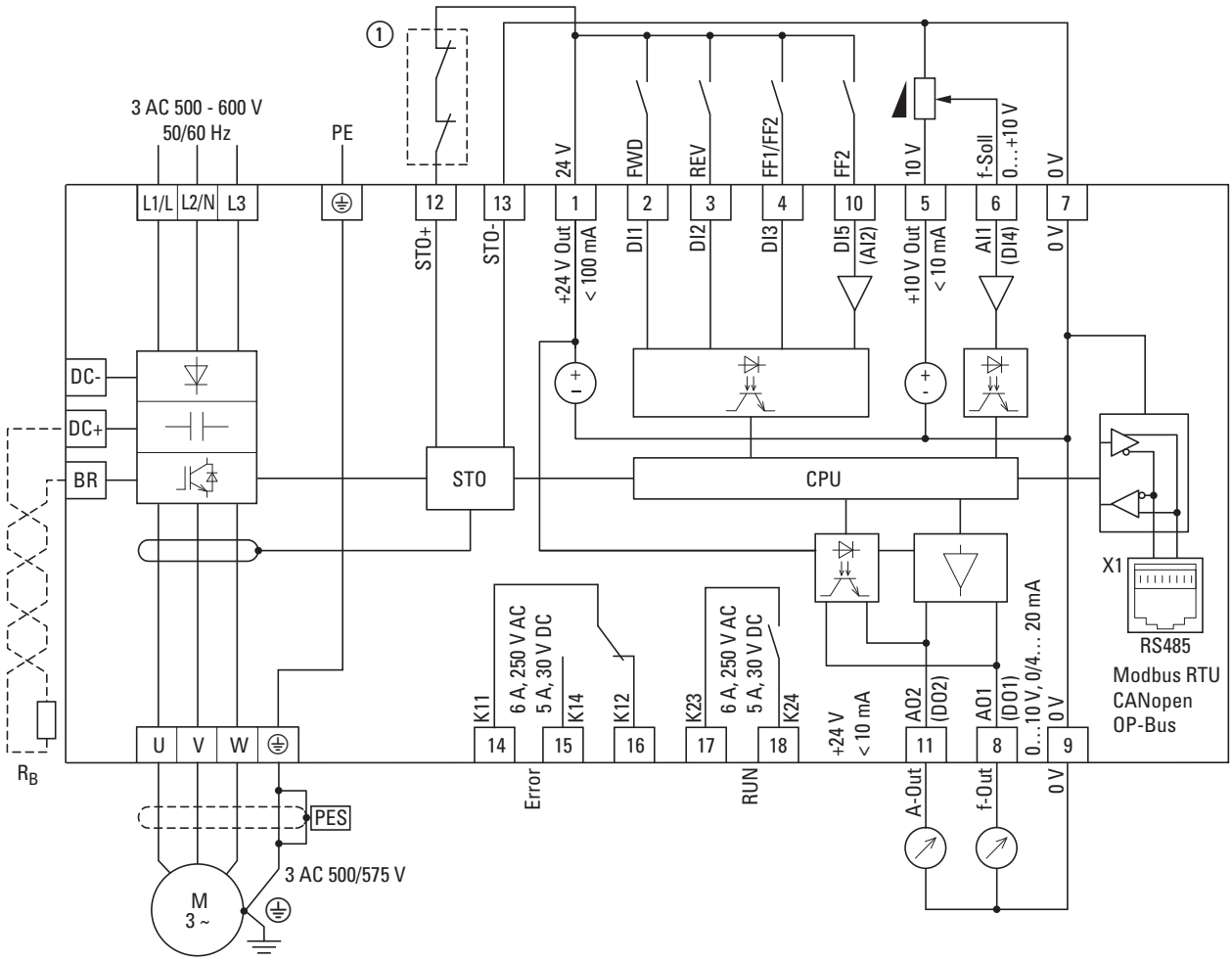

Figure 89:Block diagram DA1-35…

① Relay: Safe Torque Off (STO), SIL 2 (EN 61800-5-2)

→ DA1-35… devices do not feature an internal radio interference suppression filter.

3.7.7 DA1-35…-B55C in FS4

Mains voltage U_{LN}: 3-phase, 500 (-10 %) - 600 (+10 %) V, 50/60 Hz

Motor voltage U_2: 3-phase, $U_2 = U_{LN}$, 0 - 50/60 Hz (max. 500 Hz)

Frame size: FS4 with IP55 degree of protection

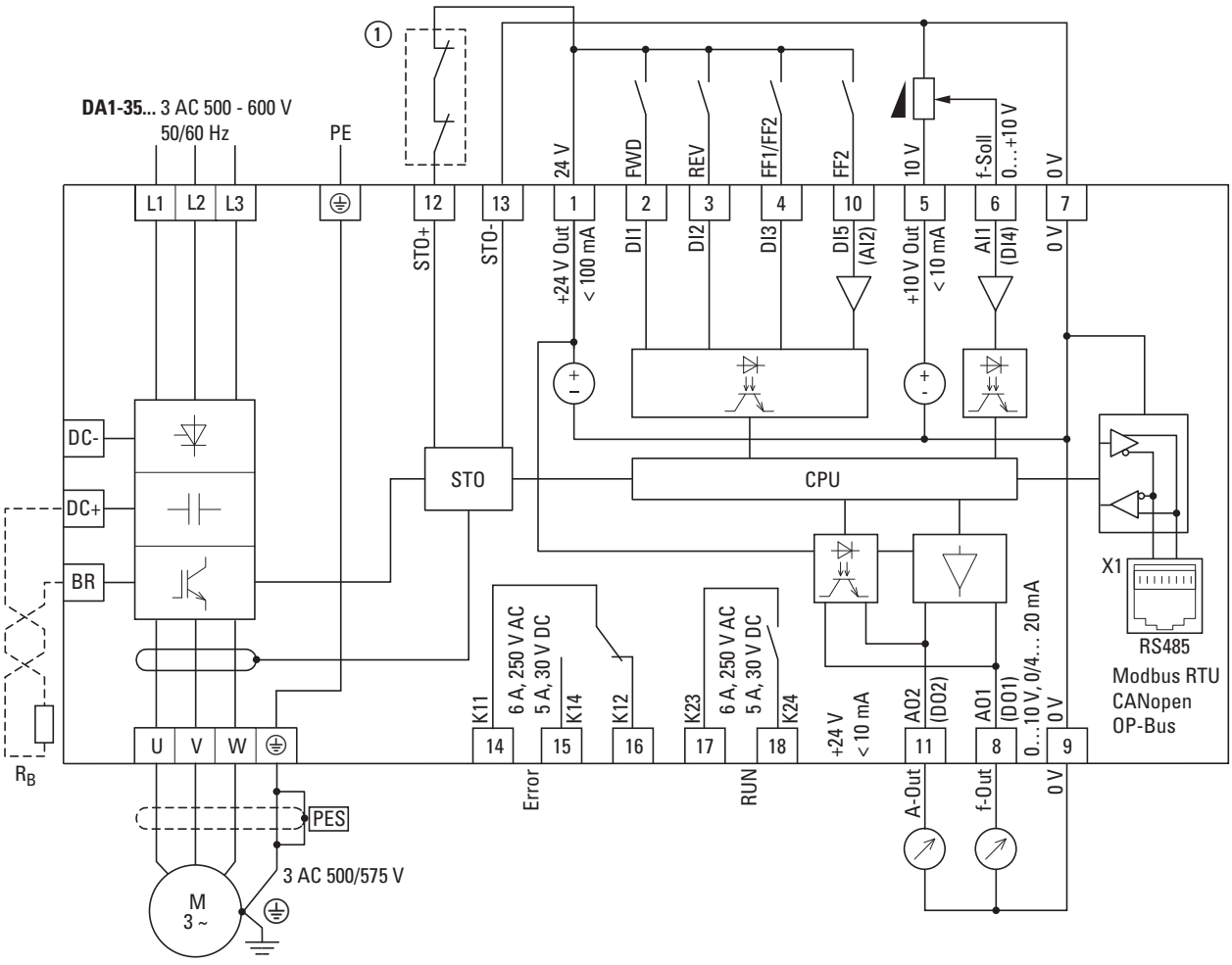

Figure 90:DA1-35… block diagram in frame size FS4

① Relay: Safe Torque Off (STO), SIL 2 (EN 61800-5-2)

3.7.8 DA1-35…-B55C in FS5, FS6

Mains voltage U_{LN}: 3-phase, 500 (-10 %) - 600 (+10 %) V, 50/60 Hz

Motor voltage U_2: 3-phase, $U_2 = U_{LN}$, 0 - 50/60 Hz (max. 500 Hz)

Frame size: FS5 and FS6 with IP55 degree of protection

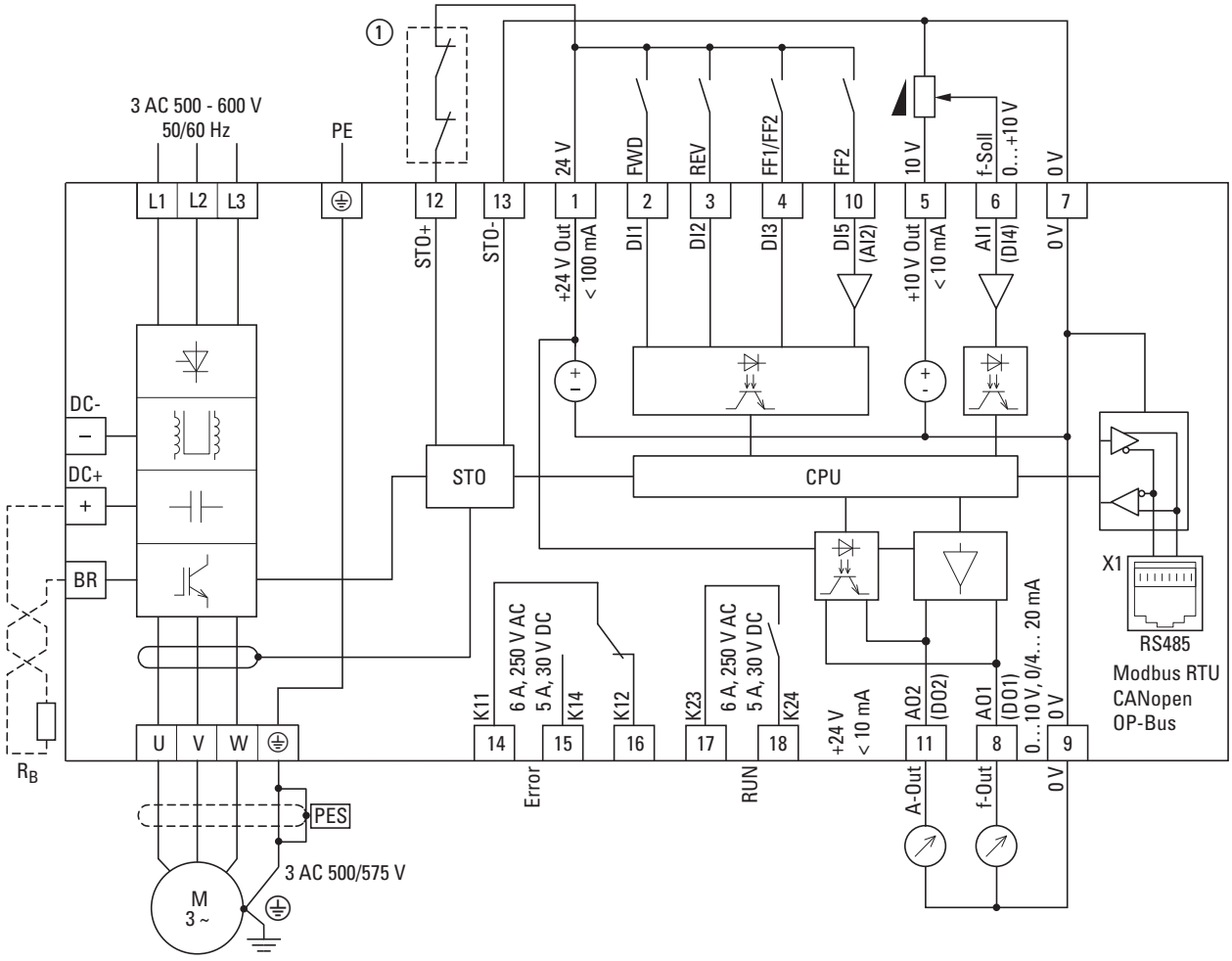

Figure 91:DA1-35… block diagram in frame size FS5 and FS6

① Relay: Safe Torque Off (STO), SIL 2 (EN 61800-5-2)

3.7.9 DA1-12…-B6SC

Mains voltage U_{LN}: 1-phase, 200 (-10 %) - 240 (+10%) V, 50/60 Hz

Motor voltage U_2: 3-phase, $U_2 = U_{LN}$, 0 - 50/60 Hz (max. 500 Hz)

Frame size: FS2 with IP66 degree of protection

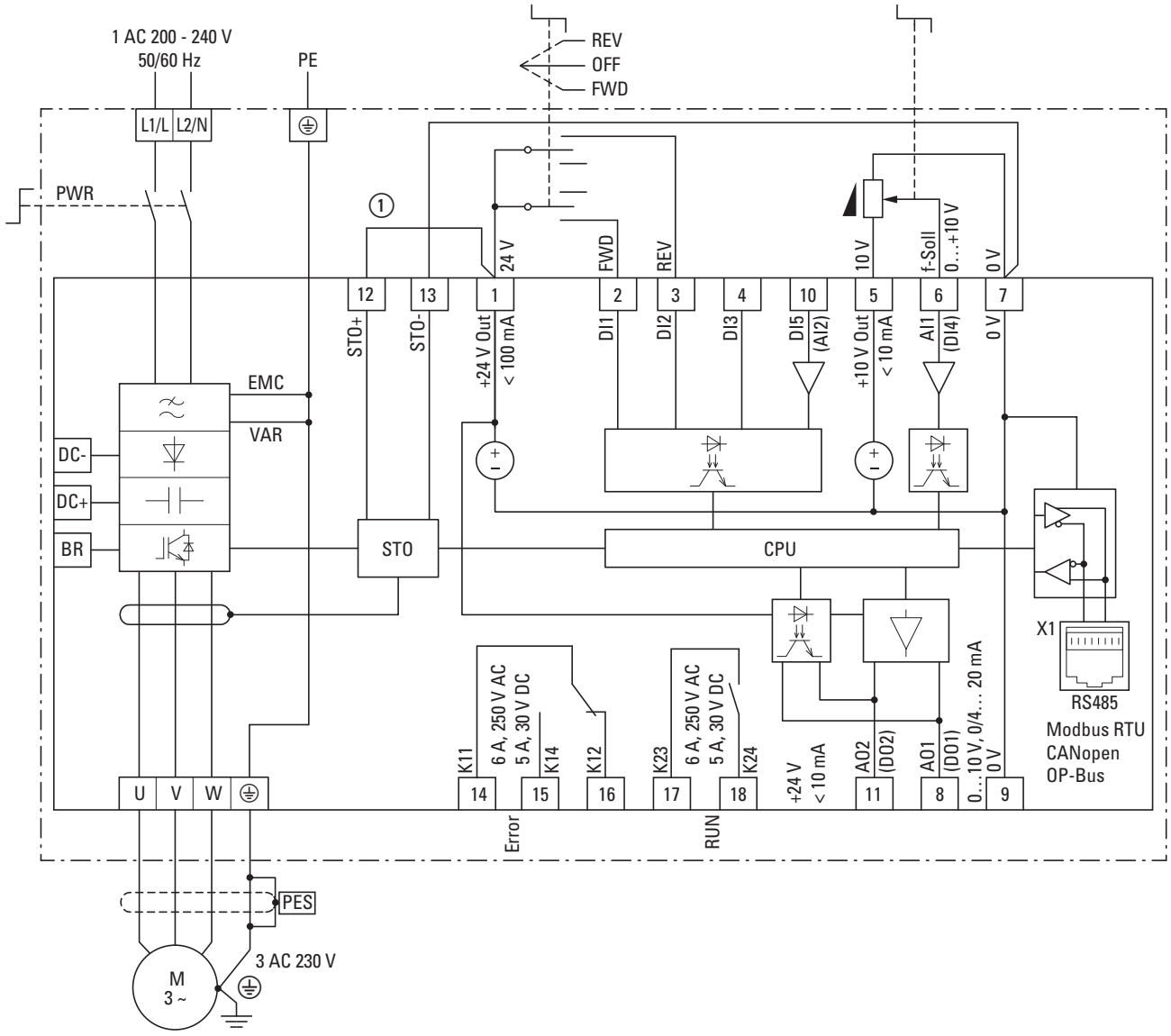

Figure 92:DA1-12…-B6SC block diagram

① Direct enable signal for STO function or relay: Safe Torque Off (STO), SIL 2 (EN 61800-5-2) as in → Figure 84, page 115.

→ The STO connection must be made by the user.

3.7.10 DA1-32…-B6SC, DA1-34…-B6SC

Mains voltage U_{LN}:

DA1-32…: 3-phase, 200 (-10 %) - 240 (+10 %) V, 50/60 Hz

DA1-34…: 3-phase, 380 (-10 %) - 480 (+10 %) V, 50/60 Hz

Motor voltage U_2: 3-phase, $U_2 = U_{LN}$, 0 - 50/60 Hz (max. 500 Hz)

Frame size: FS2 and FS3 with IP66 degree of protection

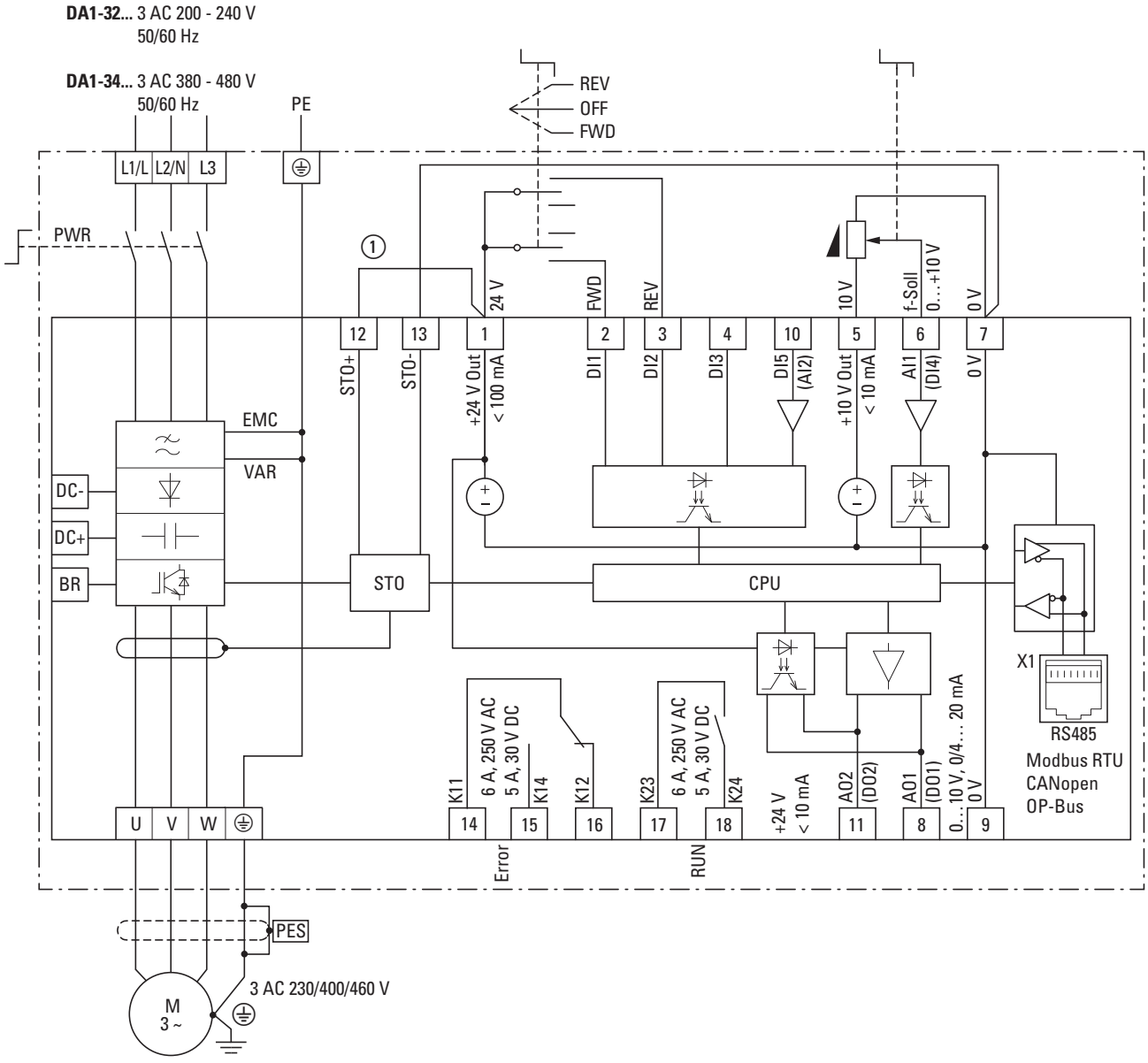

Figure 93:DA1-32…-B6SC, DA134…-B6SC block diagram

① Direct enable signal for STO function or relay: Safe Torque Off (STO), SIL 2 (EN 61800-5-2) as in → Figure 85, page 116.

→ The STO connection must be made by the user.

3.7.11 DA1-35…-B6SC

Mains voltage U_{LN}: 3-phase, 500 (-10 %) - 600 (+10 %) V, 50/60 Hz

Motor voltage U_2: 3-phase, $U_2 = U_{LN}$, 0 - 50/60 Hz (max. 500 Hz)

Frame size: FS2 and FS3 with IP66 degree of protection

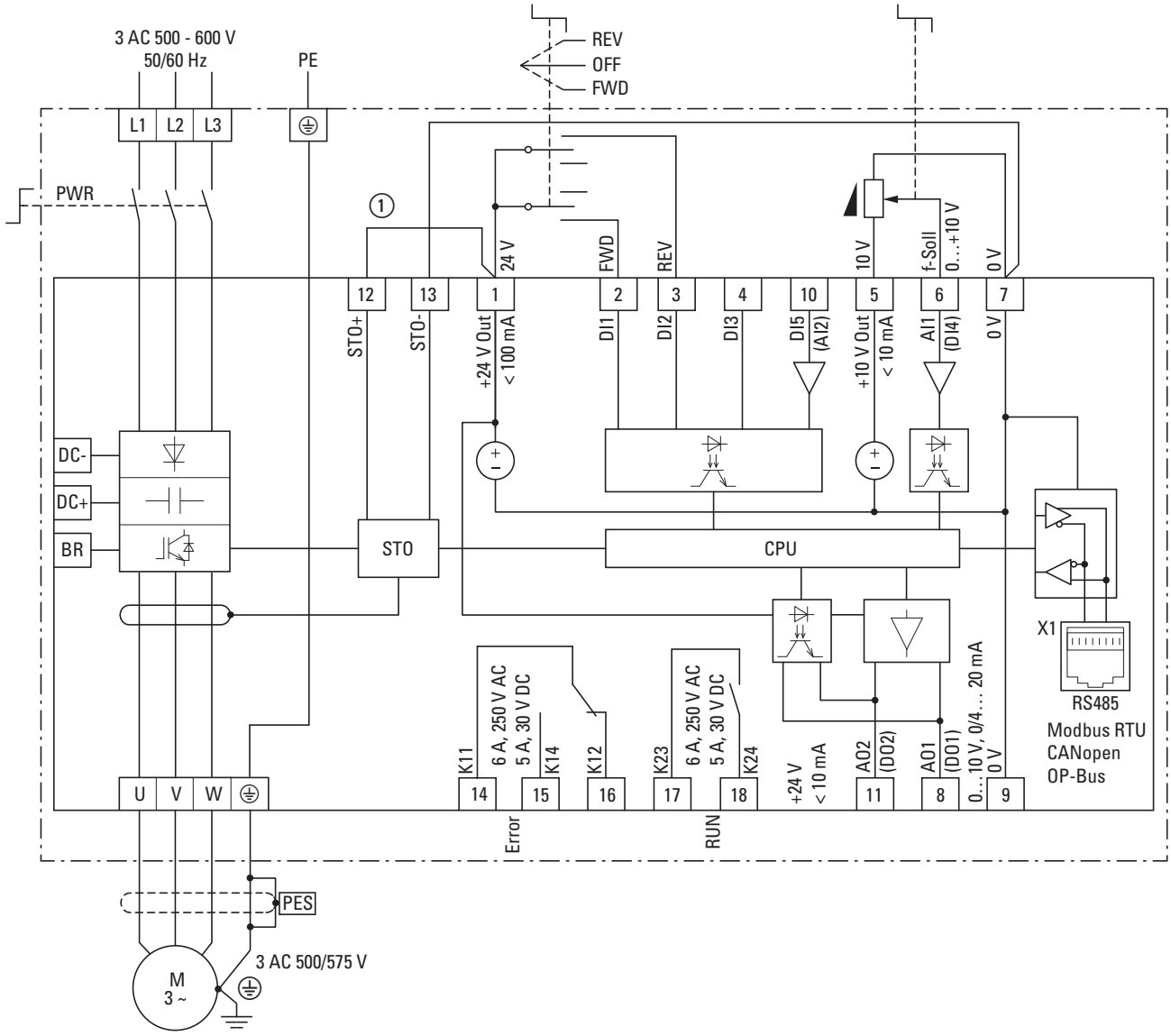

Figure 94:DA1-35…-B6SC block diagram

① Direct enable signal for STO function or relay: Safe Torque Off (STO), SIL 2 (EN 61800-5-2) as in → Figure 90, page 121.

→ The STO connection must be made by the user.

3.8 Insulation testing

The variable frequency drive of the DA1 series are tested, delivered and require no additional testing.



CAUTION

On the control signal and the connection terminals of the variable frequency drive, no leakage resistance tests are to be performed with an insulation tester.



CAUTION

Wait at least 5 minutes after switching the supply voltage off before you disconnect one of the connection terminals (L1/L, L2/N, L3, DC-, DC+, BR) of the variable frequency drive.

If insulation testing is required in the power circuit of the PDS, you must consider the following measures.

Testing the motor cable insulation

- Disconnect the motor cable from the connection terminals U, V and W of the variable frequency drive and from the motor (U, V, W). Measure the insulation resistance of the motor cable between the individual phase conductors and between the phase conductor and the protective conductor.

The insulation resistance must be greater than 1 MΩ.

Testing the mains cable insulation

- Disconnect the power cable from the mains supply network and from the connection terminals 1/L, L2/N and L3 of the variable frequency drive. Measure the insulation resistance of the mains cable between the individual phase conductors and between each phase conductor and the protective conductor.

The insulation resistance must be greater than 1 MΩ.

Testing the motor insulation

- Disconnect the motor cable from the motor (U, V, W) and open the bridge circuits (star or delta) in the motor terminal box.
  Measure the individual motor windings' insulation resistance. The measurement voltage must at least match the rated operating voltage of the motor but is not to exceed 1000 V.

The insulation resistance must be greater than 1 MΩ.



Consider the notes from the motor manufacturer in testing the insulation resistance.

3.9 Protection against electric shock

Ensuring protection against electric shock when using DA1 variable frequency drives, as per IEC/EN 61800-5-1

**Manufacturer's declaration for the initial verification as per IEC/HD 60364-6
(DIN VDE 0100-600 (VDE 0100-600)) and for periodic testing as per EN 50110-1 (DIN VDE 0105-100 (VDE 0105-100))**

Fault protection in accordance with IEC/HD 60364-4-41 (DIN VDE 0100-410 (VDE 0100-410)) for the output-side circuits of the aforementioned apparatus is guaranteed provided that the following requirements are met:

- The installation instructions in this documentation have been observed.
- The applicable standards in the IEC/HD 60364 (DIN VDE 0100 (VDE 0100) series have been observed.
- The continuity of all associated protective conductors and equipotential bonding conductors, including the corresponding connection points, has been ensured.

Provided that the above requirements are met, the aforementioned apparatus meets the requirements in IEC/HD 60364-4-41 (DIN VDE 0100-410 (VDE 0100-410):2007-06, section 411.3.2.5) when using the "automatic power supply shutdown" protective measure.

The note is based on the following information:

In the event of a short-circuit with negligible impedance to a protective conductor or to earth, the aforementioned apparatus will reduce the output voltage within a time as required in table 41.1 or within 5 seconds – depending on the applicable scenario – as per IEC/HD 60364-41 (DIN VDE 0100-410; VDE 0100-410):2007-06).

4 Operation

4.1 Checklist for commissioning

Before placing the frequency converter into operation, use the checklist below to make sure that all the following requirements are met:

No.	Activity	Notes
1	Mounting and wiring have been carried out in accordance with the corresponding instructional leaflet (→ IL04020015Z, IL04020011Z, IL04020012Z, IL04020010Z).	
2	All wiring and line section leftovers, as well as all the tools used, have been removed from the variable frequency drive's proximity.	
3	All connection terminals in the power section and in the control section were tightened with the specified torque.	
4	The lines connected to the output terminals (U, V, W, DC+, DC-, BR) of the variable frequency drive are **not** short-circuited and are **not** connected to ground (PE).	
5	The variable frequency drive has been earthed properly (PE).	
6	All electrical connections in the power section (L1/L, L2/N, L3, U, V, W, DC+, DC-, BR, PE) have been connected properly while taking into account the degree of protection and have been dimensioned in line with the corresponding requirements. The device fan in frame size FS8 requires a connection with the correct phase sequence (L1–L2–L3). – check the airflow's direction.	
7	Each single phase of the supply voltage (L or L1, L2, L3) is protected with a fuse.	
8	The variable frequency drive and the motor are adapted to the mains voltage. (→ Section 1.4.1, „Rating data on the nameplate", page14, connection type (star, delta) of the motor tested).	
9	The quality and volume of cooling air are in line with the environmental conditions required for the variable frequency drive and the motor.	
10	All connected control cables comply with the corresponding stop conditions (e.g., switch in OFF position and setpoint value= zero).	
11	The parameters that were preset at the factory have been checked with the list of parameters.	
12	The effective direction of a coupled machine will allow the motor to start.	
13	All emergency switching off functions and safety functions (→ Section 2.10, „STO function", page59) are in an appropriate condition.	

4.2 Hazard warnings for operation

Please observe the following notes.

DANGER

Commissioning is only to be completed by qualified technicians.

DANGER

Hazardous voltage!

The safety instructions on pages I and II must be followed.

DANGER

The components in the variable frequency drive's power section are energized if the supply voltage (mains voltage) is connected. For instance: L1/L, L2/N, L3, DC+, DC-, BR, U/T1, V/T2, W/T3 power terminals.
The control signal terminals are isolated from the line power potential.
There can be a dangerous voltage on the relay terminals (10, 11) even if the variable frequency drive is not being supplied with line voltage (e.g., integration of relay contacts in control systems with voltage > 48 V AC/60 V DC).

DANGER

The components in the variable frequency drive's power section remain energized up to five (5) minutes after the supply voltage has been switched off (internal DC link capacitor discharging time).

Pay attention to hazard warnings!



DANGER

Following a shutdown (fault, mains voltage off), the motor can start automatically (when the supply voltage is switched back on) if the automatic restart function has been enabled (→ parameters P2-36).

NOTICE

Any contactors and switchgear on the power side are not to be opened during motor operation. Inching operation using the power switch is not permitted.

Contactors and switchgear (repair and maintenance switches) on the motor side must not be opened while the motor is in operation.
Inching operation of the motor with contactors and switching devices in the output of the variable frequency drive is not permissible.

NOTICE

Make sure that there is no danger in starting the motor. Disconnect the driven machine if there is a danger in an incorrect operating state.

→ If motors are to be operated with frequencies higher than the standard 50 or 60 Hz, then these operating ranges must be approved by the motor manufacturer. The motors could be damaged otherwise.

4.3 Commissioning with control signal terminals (default settings)

The controls on DA1 variable frequency drives are pre-wired at the factory; however, you will need to wire the STO inputs yourself. After the mains voltage and the rated motor are connected, the DA1 variable frequency drive can be started with the local controls (see following connecting example).

→ You can skip this section if you want to set up the parameters directly for optimal operation of the variable frequency drive based on the motor data (rating plate) and the application.

The following shows a simplified connecting example of a connection with default settings.

Connecting example for three-phase motor

Connecting example for three-phase motor	Terminal	Designation	
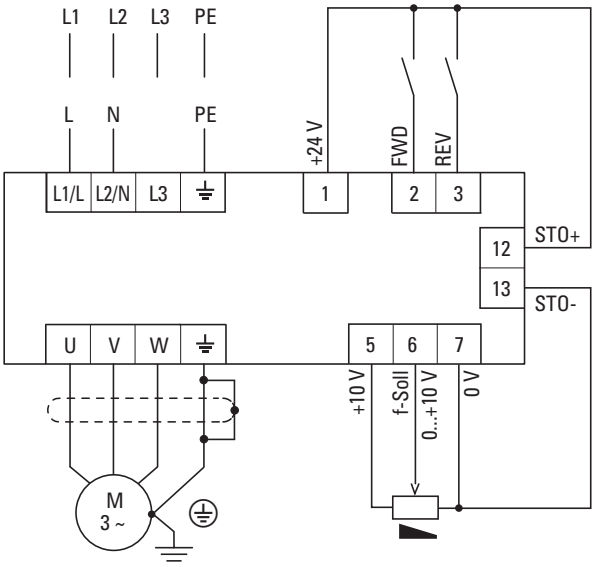	L1/L	Single-phase main terminal (DA1-12…)	Three-phase mains connection (DE1-3…)
	L2/N		
	L3	–	
	⏚	Ground connection	
	1	Control voltage +24 V (output, maximum 100 mA)	
	2	FWD, Start release clockwise rotating field	
	3	REV, Start release left rotating field	
	U	Connection for three-phase ac motor (three-phase motor)	
	V		
	W		
	⏚		
	5	Reference voltage +10 V (Output, maximum 10 mA)	
	6	Frequency reference value f-Set (Input 0 – +10 V)	
	7	Reference potential (0 V)	
	12	Safe Torque Off +	
	13	Safe Torque Off -	

▶ For simple commissioning with the preset default settings, connect the variable frequency drive as shown in the connecting example above.

The potentiometer should have a fixed resistance (connection to control signal terminals 5 and 7) of at least 1 kΩ, up to a maximum of 10 kΩ. A standard fixed resistance of 4.7 kΩ is recommended.

Make sure that the enable contacts (FWD/REV) are open and the STO is connected correctly before switching on the mains voltage.

→ If the connections for the setpoint value potentiometer cannot be clearly allocated with terminals 5, 6 and 7, you should set the potentiometer to about 50 % before giving the start release (FWD/REV) for the first time.

When the specified supply voltage is applied at the mains connection terminals (L1/L, L2/N, L3), the switched-mode power supply unit (SMPS) in the internal DC link will be used to generate the control voltage and light up the 7-segment LED display (STOP).

At this point, the variable frequency drive will be ready for operation (correct operating status) and in Stop mode.

The start release is done by actuating one of the digital inputs with +24 V:

- Terminal 2: FWD = Clockwise rotating field (Forward Run)
- Terminal 3: REV = Counterclockwise rotating field (Reverse Run)

The FWD and REV control commands are interlocked (exclusive OR) and require a rising voltage edge.

The frequency is shown with a minus sign with a start release with a left rotating field (REV).

▶ You can now set the output frequency (0 - 50 Hz) and, as a result, the speed of the connected three-phase motor (0 - n_{Motor}) by using the potentiometer via terminal 6 (0 - +10 V proportional voltage signal). The change in output frequency here is delayed based on the specified acceleration and deceleration ramps. In the default settings, these times are set to 5 seconds and to 10 seconds from a frame size FS4.

The acceleration and deceleration ramps specify the time change for the output frequency: from 0 to f_{max} (WE = 50 Hz) or from f_{max} back to 0.

Figure95 shows a good example of the process, if the release signal (FWD/ REV) is switched on and the maximum setpoint voltage reference voltage (+10 V) is applied. The speed of the motor follows the output frequency depending on the load and moment of inertia (slip), from zero to n_{max}.

If the release signal (FWD, REV) is switched off during operation, the inverter is blocked immediately (STOP). The motor comes to an uncontrolled stop (see ① in Figure95).
The acceleration time is set in parameter P1-03.

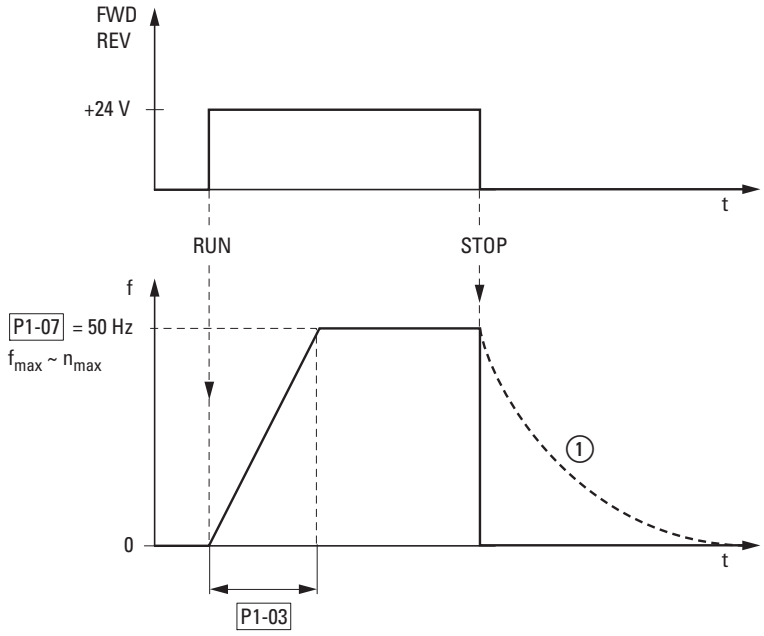

Figure 95:Start-Stop command with maximum reference voltage

4.4 Handling the keypad

The keypad can be used to configure the DA1 variable frequency drive's parameters and monitor its operation.

→ Manual MN04020006Z, "DA1 Variable Frequency Drives – Parameter Manual", goes over how to configure the individual parameters.

4.4.1 Operating unit elements

The following figure shows the elements of the DA1 variable frequency drive integrated operating unit.

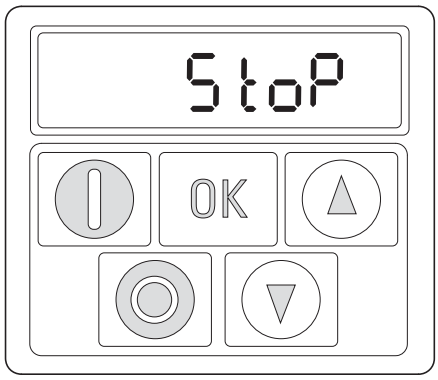

Display (7-digital LEDs)

Push buttons

Figure 96:Operating unit view (example DA1-…-A20C)

→ The integrated keypad on DA1-…-A20C devices and the (optional) external DX-KEY-LED keypad feature a six-digit 7-segment LED display.
Meanwhile, DA1-…-B20C, DA1-…-B55C devices and the (optional) external DX-KEY-OLED keypad feature a multi-language cleartext display (OLED = organic light-emitting diode display). The function keys work the exact same way.
The external DX-KEY-OLED keypad features two additional buttons (**Hand**, **Auto**). By default, these buttons do not do anything, and can only be configured (freely) in the PLC editor.

→ On OLED displays, languages can be selected by pressing **START** + ▲ simultaneously.
Display: **Select Language**.
The display language can be changed with the ▲ and ▼ arrow keys.
The selected language setting can then be saved by pressing the **OK** button.

→ The **START**, **STOP**, **UP**, and **DOWN** buttons need to be enabled with parameter P1-12 (local process data source).

Table 19: Keypad elements – Buttons

Button	Attribute ID	Explanation
	**OK**	• Navigating in parameter mode • Opens and closes the parameter interface (press the button and hold it down for more than two seconds) • Saves parameter changes • Changes the value being displayed: A, rpm, etc. (real-time information)
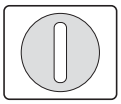	**START**	• Starts the variable frequency drive[1)] • Changes the operating direction[2)] if the motor is running
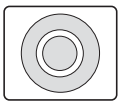	**STOP**	• Stops the variable frequency drive[1)] • Reset – Resetting after fault message
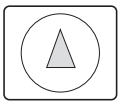	**UP**	• Increases the speed[1)] • Increment numeric value or parameter number
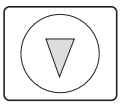	**DOWN**	• Decreases the speed[1)] • Decrement numeric value or parameter number

Note:

1) P1-12 = 1 (one operating direction) or P1-12 = 2 (two operating directions); The operating direction will be reversed when the START button is pressed
2) P1-12 = 2 only

4.4.2 Adjust parameters

Table 20: Modify parameters

Commands	Description
	Press the **OK** button and hold it down for two seconds in order to access the parameter interface. → The display will show the parameter that was last used.
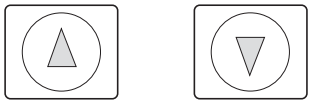	Use the ▲ and ▼ buttons to select a parameter.
	Press the **OK** button. The value of the selected parameter can be changed.
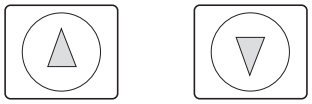	Use the ▲ and ▼ buttons to change the parameter's value.
	Press the **OK** button to confirm the parameter value change. As soon as the parameter is displayed, the value will have been saved. Press the **OK** button and hold it down for two seconds in order to exit the parameter interface (display: "StoP").
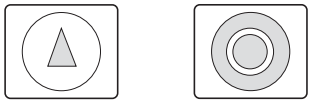	**Switching between two parameter groups** The parameters are in sequential order. This means that moving forward from the last parameter in a parameter group will take you directly to the first parameter in the next parameter group and the other way around. **Note:** In order to access the extended parameter groups, you will need to enter the corresponding password in parameter P1-14 (default passwords: level 2 = 101, level 3 = 201). Press the ▲ and **STOP** buttons to jump to the first parameter in the next parameter group.
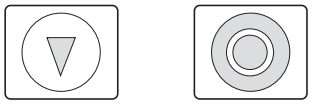	Press the ▼ and **STOP** buttons to jump to the first parameter in the previous parameter group.

4.4.3 Resetting Parameters (RESET)

Table 21: Resetting parameters (RESET)

Commands	Description
Reset to default settings	
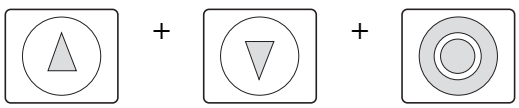	Press the ▲ and ▼ and STOP buttons and hold them down for two seconds. **→ All parameters will be restored to their default settings.** The display will show P-dEF.
Resetting after a fault	
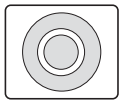	Press the **STOP** button to reset a fault message. The display will show StoP.

5 Fault messages

5.1 Introduction

DA1 series variable frequency drives come with several built-in monitoring functions. When a deviation from the correct operating state is detected, an error message will be displayed; in the inverter's default settings, the relay contact will open (control signal terminals 14 and 15).

5.1.1 Fault messages

The most recent four error messages will be stored in the order in which they occurred (with the most recent one in the first place). Fault messages can be read from the monitor-parameter P0-13. The values will not be deleted if the variable frequency drive is reset to its default settings!

5.1.2 Acknowledge fault (Reset)

To acknowledge and reset the current error message, you can either switch off the supply voltage or press the STOP button. Error messages can also be reset with an additional positive edge at control signal terminal 2 (DI1) or 3 (DI2) (new start signal).

If parameter P2-36 is set to a value between 2 (Auto-1) and 6 (Auto-5), the variable frequency drive will attempt to automatically start again up to five times.

5.1.3 Fault list

The following table lists the failure codes, the possible causes and indicates corrective measures.

Table 22: Fault messages list

Message	Error no. [dec]	Possible causes and fixes
STOP	–	Ready to start. There is no drive enable signal present. There are no fault messages present.
no-FLt	00	Shown for P0-13 if there are no messages in the error register.
OI -b	01	Excessively high braking current • Check the brake resistor and its wiring for short-circuits and ground faults. • Make sure that the braking resistance value is not lower than the minimum permissible braking resistance.
OL -br	02	Thermal overload on brake resistor The drive has been switched off in order to prevent the brake resistor from being thermally destroyed. • Make the P1-04 and P2-25 ramp times longer in order to have less frequent braking. • Reduce the load's inertia, if possible.
O-I	03	Overcurrent at variable frequency drive output Occurs right after switching on the unit: • Check the cable connection between inverter and motor. • Check the motor for shorted turns and ground faults. Occurs when starting the motor: • Check whether the motor can rotate freely and make sure that it is not being blocked mechanically. • Motor with mechanical brake: Check whether the brake is being applied. • Check the connection configuration (star/delta). • Check to make sure that the motor data was entered correctly in P1-07, P1-08, and P1-09. • In vector control mode (P4-01 = 0 or 1): Check to make sure that the cos φ (P4-05) value was entered correctly and that a motor identification run was performed correctly. • Increase the acceleration ramp time (t-acc, P1-03) if necessary. • In speed control mode (P4-01 = 2): Reduce the voltage boost with P1-11. Occurs during operation at a constant speed: • Check whether the motor is overloaded. Occurs during acceleration/deceleration: • The ramp times are too short and require too much power.If P-03 / P-04 cannot be increased, a larger device may be required.
I.t-trP	04	Motor overload. The thermal protection mechanism has tripped as a result of the device being run above the rated motor current set with P1-08 longer than a specific time. • Check to make sure that the motor data was entered correctly in P1-07, P1-08, and P1-09. • In vector control mode (P4-01 = 0 or 1): Check to make sure that the cos φ (P4-05) value was entered correctly and that a motor identification run was performed correctly. • Check the motor's connection configuration (e.g., start/delta) • If the decimal points on the display flash during operation, this means that the unit is being run in its overload range (> P1-08).In this case, use P1-03 to make the acceleration ramp longer or reduce the load. • Make sure that the motor is not being mechanically blocked and that there are no additional loads on the motor.

Message	Error no. [dec]	Possible causes and fixes
PS-trP	05	Overcurrent (Hardware) • Check the wiring to the motor and the motor itself for short-circuits and ground faults. • Disconnect the motor cable from the variable frequency drive and switch the variable frequency drive back on. If the fault message still appears, the device needs to be replaced. Before commissioning the new device, check the system for short-circuits or ground faults that could have caused the device to fail.
O.Volt	06	Overvoltage in DC link The DC link voltage value can be viewed using parameter P0-20. P0-36 contains a fault register with the last values before the unit was switched off (scan time: 256 ms). • Check to make sure that the supply voltage falls within the range for which the variable frequency drive is sized. • If the fault occurs during deceleration or stopping: Make the deceleration ramp (P1-04/P2-25) longer or use the brake resistor. • In vector control mode (P4-01 = 0 or = 1): Reduce the speed controller's gain (P4-03). • If using the PID controller: Reduce P3-11 (PID1 fault ramp) to ensure that the ramps are active.
U.Volt	07	Undervoltage in DC link **Note:** Generally, this message will appear when the supply voltage is switched off on the device and the DC link voltage dies away. In this case, there is no fault. If the message appears during operation: • Check whether the power supply voltage is too low. • Check all components/devices in the variable frequency drive's feeder circuit (circuit-breaker, contactor, choke, etc.) to make sure they are connected properly and have an adequate contact resistance.
O-t	08	Overtemperature at heat sink. The drive is too hot. The heat sink temperature can be viewed by using P0-21. P0-38 contains a fault register with the last values before the unit was switched off (scan time: 30 s). • Check to make sure that the variable frequency drive is being operated within the ambient temperature range specified for it. (IP20 devices: max. 50 °C; IP66 devices: max. 40 °C). • Check to make sure that the device fan is running. • Make sure that cooling air can circulate freely (clearances to neighboring devices above and below the variable frequency drive). • Improve the control cabinet's ventilation if necessary: The device's vents must not be obstructed, e.g., by dirt or as a result of devices being installed too close to each other. • Reduce the switching frequency with P2-24. • Reduce the load, if possible.
U-t	09	Under-temperature The message will appear if the ambient air temperature falls below -10 °C. In order to be able to start the drive, the temperature must be higher than this.
P-dEF	10	The parameters' default settings have been loaded. • Press the STOP button: You will be able to reconfigure the drive after doing so.

Message	Error no. [dec]	Possible causes and fixes
E-trIP	11	External fault (at digital input 5, terminal 10, if P1-13 = 6/7/16/17). There must be a high-level signal at this input in order to be able to run the variable frequency drive. • If a thermistor is connected to terminal 10, check whether the motor is too hot.
SC-Obs	12	Communication fault with an external operating unit or with a PC. • Check connections.
FLt-dc	13	Excessively high DC link voltage ripple The DC link voltage ripple can be viewed using P0-16. P0-37 contains a fault register with the last values before the unit was switched off (scan time: 20 ms). • Check to make sure that all the mains supply phases are present and that their voltage balance falls within the permissible tolerance range (3%). • Reduce the load if possible. • If the fault persists, please contact your nearest Eaton sales branch.
P-LOSS	14	Incoming power phase failure (only for devices with a three-phase power supply)
h O-I	15	Overcurrent at output • See Error no. 03.
th-FLt	16	Malfunctioning heat sink thermistor. • Please contact your nearest Eaton sales branch.
dAtA-F	17	Error in internal memory. The parameters have not been saved and the default settings have been loaded. • Change the parameter values (again) and save them once more. • If the message appears again, please contact your nearest Eaton sales branch.
4-20 F	18	The analog input's input current does not fall within the specified range. • Check the setting in P2-30 for AI1 (terminal 6) and P2-33 for AI2 (terminal 10). • In the case of 4-20 mA: Check the setpoint connection for wire breakage.
dAtA-E	19	Error in internal memory. The parameters have not been saved and the default settings have been loaded. • Change the parameter values (again) and save them once more. • If the message appears again, please contact your nearest Eaton sales branch.
U-dEF	20	The customer's settings for the parameters have been imported. • Press the STOP button.
F-Ptc	21	Motor PTC thermistor over temperature
FAn-F	22	The device's internal fan is experiencing a fault In the case of frame size FS8: Wrong device fan operating direction • Check the supply voltage phase sequence (L1–L2–L3).
O-hEAt	23	The measured ambient temperature exceeds the specified value. • Check the device's internal fan. • Make sure that the required clearance around the device is being maintained and that cooling air can flow through the vents on the device unimpeded. • Reduce the switching frequency with P2-24. • If possible: Reduce the load.
O-torq	24	Maximum permissible torque exceeded. • If possible: Reduce the load or increase acceleration time t-acc.
U-torq	25	Only active if brake control is enabled in hoisting gear mode (P2-18 = 8). The torque produced before the hoisting gear's mechanical brake is enabled falls below the set threshold.

Message	Error no. [dec]	Possible causes and fixes
OUt-F	26	Device output fault • Please contact your nearest Eaton sales branch.
Sto-F	29	Internal STO circuit fault • Please contact your nearest Eaton sales branch.
Enc-01	30	No communication between the encoder module and the variable frequency drive. • Check to make sure that the module is correctly plugged in and secured.
Enc-02 SP-Err	31	The calculated motor speed is different from the measured motor speed. • Check the encoder connection, including the corresponding shielding. • Increase the value of P6-07 if necessary.
Enc-03	32	The motor speed and the PPR value entered in P6-06 do not match. The PPR value in P6-06 must be at least 60. • Check the speed entered in P1-10.
Enc-04	33	Channel A fault: Usually a bad connection. • Check wiring.
Enc-05	34	Channel B fault Usually a bad connection. • Check wiring.
Enc-06	35	Error on channels A and B Usually a bad connection. • Check wiring.
AtF-01	40	Motor identification failed: The measured stator resistance varies between the phases. • Make sure that the motor is connected properly and working correctly. • Check the motor windings to make sure they have the same resistance values.
AtF-02	41	Motor identification failed: The measured stator resistance is too large. • Make sure that the motor is connected properly and working correctly. • Check to make sure that the device's rated output matches the motor's rated output. The difference should not exceed one full output class.
AtF-03	42	Motor identification failed: The measured motor inductance is too low. • Make sure that the motor is connected properly and working correctly.
AtF-04	43	Motor identification failed: The measured motor inductance is too high. • Make sure that the motor is connected properly and working correctly. • Check to make sure that the device's rated output matches the motor's rated output. The difference should not exceed one full output class.
AtF-05	44	Motor identification failed: The measured motor parameters do not match. • Make sure that the motor is connected properly and working correctly. • Check to make sure that the device's rated output matches the motor's rated output. The difference should not exceed one full output class.
OUt-Ph	49	A phase in the motor cable is not connected or has a discontinuity.
Sc-F01	50	No valid Modbus frame was received within the time specified in P5-06. • Check to make sure that the network master is working correctly. • Check connecting cables. • Increase the value of P5-06 to an acceptable value.

Message	Error no. [dec]	Possible causes and fixes
Sc-F02	51	No valid CANopen frame was received within the time specified in P5-06. • Check to make sure that the network master is working correctly. • Check connecting cables. • Increase the value of P5-06 to an acceptable value.
Sc-F03	52	Communications between the device and the plugged-in field bus option have dropped out. • Check to make sure that the module is installed properly.
Sc-F04	53	Communications between the device and the plugged-in I/O expansion have dropped out. • Check to make sure that the module is installed properly.
OF-01	60	No internal connection to an optional board
OF-02	61	Optional module in undefined operating state
PLC-01	70	Non-supported function block from function block editor
PLC-02	71	Program from function block editor is too big
PLC-03	72	Division by zero
PLC-04	73	Lower limit is higher than upper limit
PLC-05	74	Overflow table Function block editor

6 Technical Data

6.1 General rating data

Technical data	Symbol	Unit	Value
General			
Standards			EMC: EN 61800-3:2004+A1-2012 Radio interference: EN 55011: 2010 Safety: EN 61800-5: 2007 Degree of protection: EN 60529: 1992 **Note:** DA1-35… devices are not covered by the declaration of conformity for the EU EMC Directive.
Certifications and manufacturer's declarations on conformity			CE, UL, cUL, c-Tick, UkrSEPRO, Gost-R **Note:** Frame size FS8 is not UL or cUL listed as of this writing.
Production quality			RoHS, ISO 9001
Climatic proofing	ρ_w	%	< 95 %, mean relative humidity (RH), non-condensing (EN 50178)
Ambient air temperature			
Operational			
IP20 (NEMA 0)	ϑ	?C	-10 - +50 (frost-free and condensation-free)
IP55 (NEMA 3)	ϑ	?C	-10 - +40, with derating of 1.5% per °C above 40 °C on rated operational current I_e **Note:** Operation within a temperature range of 40 to 50 °C does not conform to UL listing.
IP66 (NEMA 4X)	ϑ	°C	-10 - +40, with a derating of 2.5% per °C above 40 °C on rated operational current I_e **Note:** Operation within a temperature range of 40 to 50 °C does not conform to UL listing.
Storage	ϑ	°C	-40 - +60
$MTTF_d$		Years	4525
MTBF (mean time between two failures)		Years	50
PFH_D			1.23 - 09 1/h (0.12 % of SIL)
Electrostatic discharge (ESD, EN 61000-4-2:2009	U	kV	±4, contact discharge ±8, air discharge
Fast transient burst (EFT/B, EN 61000-4-4: 2004)	U	kV	±1, at 5 kHz, control signal terminal ±2, at 5 kHz, motor connection terminals, Single-phase mains connection terminals ±4, at 5 kHz, three-phase mains connection terminals

Technical data	Symbol	Unit	Value
Overvoltage (surge, EN 61000-4-5: 2006)			
110 - 115 V, 200 - 240 V	U	kV	±1, phase to phase/neutral conductor ±2, phase/neutral conductor to earth
380 - 480 V, 500 - 600 V	U	kV	±2, phase to phase ±4, phase to earth
Electric strength (flash, EN 61800-5-1: 2007)			
110 - 115 V, 200 - 240 V	U	kV	1.5
380 - 480 V, 500 - 600 V	U	kV	2.5
Radio interference class (EMC)			
Category and maximum screened motor cable length with integrated radio interference suppression filter			
C1	l	m	1
C2	l	m	5
C3	l	m	25
Mounting position			vertical
Altitude	h	m	0 - 1000 above sea level, > 1000 with 1% load current reduction every 100 m, maximum 2000 with UL approval, maximum 4000 without UL approval
Degree of protection			IP20 (NEMA 0) IP55 (NEMA 3) IP66 (NEMA 4X)
Fan (built-in)			yes
Busbar tag shroud			BGV A3 (VBG4, finger- and back-of-hand proof)
Main circuit / power section			
Feeder unit			
Rated operating voltage			
DA1-12…	U_e	V	1~ 230 (200 V -10 % - 240 V +10 %)
DA1-32…	U_e	V	3~ 230 (200 V -10 % - 240 V +10 %)
DA1-34…	U_e	V	3~ 400 (380 V -10 % - 480 V +10 %)
DA1-35…	U_e	V	3~ 575 (500 V - 10 % - 600 V +10 %)
Mains frequency	f	Hz	50/60 ±10 %
Phase Imbalance		%	max. 3
Maximum short-circuit current (supply voltage)	SCCR	kA	100 (according to IEC 60439-1)
Mains switch-on frequency			Maximum of one time every 30 seconds
Mains network configuration (AC power supply network)			TN and TT earthing systems with directly earthed neutral point. IT earthing systems with PCM insulation monitoring relays only. Operation on phase-earthed networks is only permissible up to a maximum phase-earth voltage of 300 V AC.

Technical data	Symbol	Unit	Value
Motor feeder			
Output voltage			
DA1-12…, DA1-32…, DA1-34…, DA1-35…	U_2	V	3~ 0 - U_e
Assigned motor output			
at 230 V, 50 Hz	P	kW	0.75 - 75
at 400 V, 50 Hz	P	kW	0.75 - 250
at 500 V, 60 Hz	P	kW	0.75 - 110
Output Frequency			
Range, parameterizable	f_2	Hz	0 - 50/60 (max. 500 Hz)
resolution	Δf	Hz	0.1
Rated operational current	I_e	A	IP20: 4.3- 24/370 - 450 IP55: 24 -302 IP66: 4.3 -18
Overload current for 60 s every 600 s	i_I	%	150
Starting current for 4 s every 40 s	i_I	%	200
Motor cable length			
screened	l	m	100
unscreened	l	m	150
with motor choke	Δl	%	100 (increased maximum cable length)
Switching frequency (pulse frequency)	f_{PWM}	kHz	4 - 32 (double modulation) / 2 - 16 (effective) Maximum value depends on rating
Operate Mode			V/Hz control, slip compensation, vector control
SLV, max. speed error	Δn	%	±0.5
DC braking			
Time before start	t	s	0 - 25, in the event of a stop
Motor pick-up control function (for catching spinning motors)			yes
Brake chopper			yes
Braking current during continuous operation	I_{BR}	%	100 (I_e)
Maximum braking current	I_{BRmax}	%	150 for 60 s

Technical data	Symbol	Unit	Value
Control section			
Terminal capacity (clampable)	A	mm^2	0.05 - 2.5 (30 - 12 AWG)
Control voltage			
Output voltage (control signal terminal 1)	U_c	V DC	24
Input voltage (control signal terminal 1)	U_c	V DC	18 - 30
Load rating (control signal terminal 1), maximum	I	mA	100
Reference voltage (control signal terminal 5)	U_S	V DC	10
Load rating (control signal terminal 5), maximum	I	mA	10
Digital Input (DI)			
Number (configurable)			3 - 5
Logic (level)			Increase
Response time	t	ms	< 4
Input voltage range High (1)	U_c	V DC	8 - 30
Input voltage range Low (0)	U_c	V DC	0 - 4
Analog Input (AI)			
Number (configurable)			0 - 2
resolution			12 bits
accuracy		%	< 1 to the final value
Response time	t	ms	< 4
Input voltage range	U_{Ref}	V	0/-10 - +10, DC (R_i ~ 72 kΩ)
Input current range	I	mA	0/4 - 20 (R_B ~ 500 Ω)
Setpoint potentiometer (recommended fixed resistance)	R	kΩ	1 -10
Relay output (K)			
Number of relays (contacts)			2 (1 N/O/1 changeover contact)
Switching capacity			
AC	I	A	6 (250 V)
DC current	I	A	5 (30 V)
Digital/analog output (DO/AO)			
Quantity			2 (digital/analog)
Output voltage			
TH	U_{out}	V DC	+24
AO	U_{out}	V DC	0/-10 - +10
Current carrying capacity DO	I_{out}	mA	< 20
AO resolution			12 bits
Interface (RJ45)			OP bus, Modbus RTU, CANopen, (RS485)
STO (Safe Torque Off)			
Voltage	U	V DC	+24 (18 - 30)
Current	I	mA	100
SIL category			2
PL			d

6.2 Specific rated operational data

6.2.1 DA1-12… series

Physical quantity		Symbol	Unit	4D3	7D0	011
Rated operational current		I_e	A	4.3	7.0	10.5
Overload current for 60 s every 600 s		i_I	A	6.45	10.5	15.75
Apparent power at rated operation[1)]	230 V	S	kVA	1.71	2.79	4.18
	240 V	S	kVA	1.79	2.91	4.36
Assigned motor power	230 V	P	kW	0.75	1.5	2.2
	230 V	P	HP	1	2	3
Power side (primary side):						
Number of phases				single-phase or two-phase		
Rated voltage		U_{LN}	V	200 - 10 % - 240 + 10 %, 50/60 Hz (180 - 264 V ±0 %, 48 - 62 Hz ±0 %)		
Input current (phase current)		I_{LN}	A	9	13	19
Minimum braking resistance		R_B	Ω	100	50	35
Switching frequency (pulse frequency)						
Default settings		f_{PWM}	kHz	16	16	16
Setting range		f_{PWM}	kHz	4 - 32 kHz	4 - 32	4 - 32
Maximum leakage current to earth (PE), without motor		I_{PE}	mA	2.49	2.49	2.49
Efficiency		η		0.94	0.96	0.95
Heat dissipation at I_e		P_V	W	45.75	63	103.4
Frame size				FS2	FS2	FS2

6.2.2 DA1-32… series

Physical quantity		Symbol	Unit	4D3	7D0	011	018	024	024
Rated operational current		I_e	A	4.3	7.0	10.5	18	24	24
Overload current for 60 s every 600 s		i_I	A	6.45	10.5	15.75	27	36	36
Apparent power at rated operation	230 V	S	kVA	1.71	2.79	4.18	7.17	9.56	9.56
	240 V	S	kVA	1.79	2.91	4.36	7.48	9.98	9.98
Assigned Instance Motor Power	230 V	P	kW	0.75	1.5	2.2	4.0	5.5	5.5
	230 V	P	HP	1	2	3	5	7.5	7.5
Power side (primary side):									
Number of phases				three-phase					
Rated operating voltage		U_{LN}	V	200 V - 10 % - 240 V +10 %, 50/60 Hz (180 - 264 V ±0 %, 48 - 62 Hz ±0 %)					
Input current (phase current)		I_{LN}	A	6	11	13	21	26	27
Minimum braking resistance		R_B	Ω	100	50	35	20	20	20
Switching frequency (pulse frequency)									
Default settings		f_{PWM}	kHz	16	16	16	16	16	16
Setting range		f_{PWM}	kHz	4 - 32	4 - 32	4 - 32	4 - 32	4 -16	4 - 16
Maximum leakage current to earth (PE), without motor		I_{PE}	mA	1.73	1.73	1.73	0.93	0.93	1.42
Efficiency		η		0.95	0.96	0.96	0.96	0.97	0.97
Heat dissipation at I_e		P_V	W	39.75	61.5	90.2	160	170.5	170.5
Frame size				FS2	FS2	FS2	FS3	FS3	FS4

DA1-32… series										
Physical quantity		**Symbol**	**Unit**	**030**	**046**	**061**	**072**	**090**	**110**
Rated operational current		I_e	A	30	46	61	72	90	110
Overload current for 60 s every 600 s at 50 °C		i_I	A	58.5	69	91.5	108	135	165
Apparent power at rated operation	230 V	S	kVA	15.5	18.3	24.3	28.7	35.9	43.8
	240 V	S	kVA	16.2	19.1	25.4	29.9	37.4	45.7
Assigned Instance Motor Power	230 V	P	kW	7.5	11	15	18.5	22	30
	230 V	P	HP	10	15	20	25	30	40
Power side (primary side):									
Number of phases				three-phase					
Rated operating voltage		U_{LN}	V	200 V - 10 % - 240 V +10 %, 50/60 Hz (180 - 264 V ±0 %, 48 - 62 Hz ±0 %)					
Input current (phase current)		I_{LN}	A	33	50	64	74	99	121
Minimum braking resistance		R_B	Ω	22	22	12	12	6	6
Pulse frequency									
Default settings		f_{PWM}	kHz	8	8	8	8	8	4
Setting range		f_{PWM}	kHz	4 - 24	4 - 24	4 - 24	4 - 24	4 -24	4 - 16
Maximum leakage current to earth (PE), without motor		I_{PE}	mA	1.42	1.42	0.28	0.28	1.54	1.54
Efficiency		η		0.97	0.97	0.97	0.97	0.97	0.97
Heat dissipation at I_e		P_V	W	187.5	264	345	518	550	720
Frame size				FS4	FS4	FS5	FS5	FS6	FS6

DA1-32… series Physical quantity		Symbol	Unit	150	180	202	248
Rated operational current		I_e	A	150	180	202	248
Overload current for 60 s every 600 s		i_I	A	225	270	303	372
Apparent power at rated operation	230 V	S	kVA	59.8	71.7	80.5	98.8
	240 V	S	kVA	62.4	74.8	84	103.1
Assigned Instance Motor Power	230 V	P	kW	37	45	55	75
	230 V	P	HP	50	60	75	100
Power side (primary side):							
Number of phases				three-phase			
Rated operating voltage		U_{LN}	V	200 V - 10 % - 240 V +10 %, 50/60 Hz (180 - 264 V ±0 %, 48 - 62 Hz ±0 %)			
Input current (phase current)		I_{LN}	A	160	188	207	246
Minimum braking resistance		R_B	Ω	6	6	6	6
Switching frequency (pulse frequency)							
Default settings		f_{PWM}	kHz	4	4	4	4
Setting range		f_{PWM}	kHz	4 - 12	4 - 8	4 - 16	4 - 12
Maximum leakage current to earth (PE), without motor		I_{PE}	mA	1.54	1.54	2.74	2.74
Efficiency		η		0.97	0.98	0.98	0.98
Heat dissipation at I_e		P_V	W	814	945	1100	1425
Frame size				FS6	FS6	FS7	FS7

6.2.3 DA1-34… series

Physical quantity		Symbol	Unit	2D2	4D1	5D8	9D5	014	018	024
Rated operational current		I_e	A	2.2	4.1	5.8	9.5	14	18	24
Overload current for 60 s every 600 s		i_l	A	3.3	6.15	8.7	14.25	21	27	36
Apparent power at rated operation	400 V	S	kVA	1.52	2.84	4.02	6.58	9.7	12.5	16.6
	480 V	S	kVA	1.83	3.41	4.8	7.9	11.6	15	20
Assigned Instance Motor Power	400 V	P	kW	0.75	1.5	2.2	4.0	5.5	7.5	11
	460 V	P	HP	1	2	3	5	7.5	10	15
Power side (primary side):										
Number of phases				three-phase						
Rated operating voltage		U_{LN}	V	380 V - 10 % - 480 V +10 %, 50/60 Hz (342 - 528 V ±0 %, 48 - 62 Hz ±0 %)						
Input current (phase current)		I_{LN}	A	3.5	6	7.5	12	17	22	28
Minimum braking resistance		R_B	Ω	400	200	150	100	75	50	40
Switching frequency (pulse frequency)										
Default settings		f_{PWM}	kHz	8	8	8	8	8	8	8
Setting range		f_{PWM}	kHz	4 - 32	4 - 32	4 - 32	4 - 32	4 -24	4 - 24	4 - 16
Maximum leakage current to earth (PE), without motor		I_{PE}	mA	4.65	4.65	4.65	4.65	1.55	1.55	1.55
Efficiency		η		0.92	0.95	0.95	0.96	0.96	0.97	0.97
Heat dissipation at I_e		P_V	W	63.75	76.5	101.2	136	209	300	297
Frame size				FS2	FS2	FS2	FS2	FS3	FS3	FS3

DA1-34… series **Physical quantity**		**Symbol**	**Unit**	**024**	**030**	**039**	**046**	**061**	**072**	**090**
Rated operational current		I_e	A	24	30	39	46	61	72	90
Overload current for 60 s every 600 s		i_I	A	36	45	58.5	69	91.5	108	135
Apparent power at rated operation	400 V	S	kVA	16.6	20.8	27	31.9	42.3	49.9	62.4
	480 V	S	kVA	20	24.9	32.4	38.2	50.7	59.9	74.8
Assigned Instance Motor Power	400 V	P	kW	11	15	18.5	22	30	37	45
	460 V	P	HP	15	20	25	30	40	50	60
Power side (primary side):										
Number of phases					three-phase					
Rated operating voltage		U_{LN}	V		380 V - 10 % - 480 V +10 %, 50/60 Hz (342 - 528 V ±0 %, 48 - 62 Hz ±0 %)					
Input current (phase current)		I_{LN}	A	28	34	44	52	66	77	103
Minimum braking resistance		R_B	Ω	40	22	22	22	12	12	6
Switching frequency (pulse frequency)										
Default settings		f_{PWM}	kHz	8	8	8	8	8	8	4
Setting range		f_{PWM}	kHz	4 - 16	4 - 24	4 - 24	4 - 24	4 - 24	4 -24	4 - 16
Maximum leakage current to earth (PE), without motor		I_{PE}	mA	2.47	2.47	2.47	2.47	0.49	0.49	2.68
Efficiency		η		0.97	0.97	0.97	0.97	0.97	0.97	0.97
Heat dissipation at I_e		P_V	W	297	375	444	506	840	925	1080
Frame size				FS4	FS4	FS4	FS4	FS5	FS5	FS6

DA1-34… series											
Physical quantity		**Symbol**	**Unit**	**110**	**150**	**180**	**202**	**240**	**302**	**370**	**450**
Rated operational current		I_e	A	110	150	180	202	240	302	370	456
Overload current for 60 s every 600 s		i_l	A	165	225	270	303	360	453	555	675
Apparent power at rated operation	400 V	S	kVA	76.2	104	125	140	166	209	256	311
	480 V	S	kVA	91.5	125	150	168	200	251	307	332
Assigned Instance Motor Power	400 V	P	kW	55	75	90	110	132	160	200	250
	460 V	P	HP	75	120	150	175	200	250	300	350
Power side (primary side):											
Number of phases				three-phase							
Rated operating voltage		U_{LN}	V	380 V - 10 % - 480 V +10 %, 50/60 Hz (342 - 528 V ±0 %, 48 - 62 Hz ±0 %)							
Input current (phase current)		I_{LN}	A	126	165	192	211	241	299	377	459
Minimum braking resistance		R_B	Ω	6	6	6	6	6	6	2	2
Switching frequency (pulse frequency)											
Default settings		f_{PWM}	kHz	4	4	4	4	4	4	4	4
Setting range		f_{PWM}	kHz	4 - 16	4 - 12	4 - 8	4 - 16	4 - 12	4 - 8	4 - 8	4 - 8
Maximum leakage current to earth (PE), without motor		I_{PE}	mA	2.68	2.68	2.68	4.75	4.75	4.75	N/A	N/A
Efficiency		η		0.98	0.98	0.98	0.98	0.98	0.98	N/A	N/A
Heat dissipation at I_e		P_V	W	1210	1575	1800	2090	2375	3040	4000	5000
Frame size				FS6	FS6	FS6	FS7	FS7	FS7	FS8	FS8

6.2.4 DA1-35… series

DA1-35… devices are not covered by the declaration of conformity.
Additional radio interference suppression filters are required for compliance.

Physical quantity		Symbol	Unit	2D1	3D1	4D1	6D5	9D0	012
Rated operational current		I_e	A	2.1	3.1	4.1	6.5	9	12
Overload current for 60 s every 600 s at 50 °C		i_I	A	3.15	4.65	6.15	9.75	13.5	18
Apparent power at rated operation	500 V	S	kVA	1.6	2.1	2.4	4.3	6	7.5
	600 V	S	kVA	2	2.5	2.9	5.1	7.3	9
Assigned Instance Motor Power	500 V	P	kW	0.75	1.5	2.2	4	5.5	7.5
	575 V	P	HP	1	2	3	5	7.5	10
Power side (primary side):									
Number of phases				three-phase					
Rated operating voltage		U_{LN}	V	500 V -10 % - 600 V +10 %, 50/60 Hz					
Input current (phase current)		I_{LN}	A	3.5	4.5	4.5	9	12	15
Minimum braking resistance		R_B	Ω	50	50	50	50	50	40
Switching frequency (pulse frequency)									
Default settings		f_{PWM}	kHz	8	8	8	8	8	8
Setting range		f_{PWM}	kHz	4 - 24	4 - 24	4 - 24	4 - 24	4 - 24	4 - 24
Maximum leakage current to earth (PE), without motor		I_{PE}	mA	–	–	–	–	–	–
Efficiency		η		0.97	0.97	0.97	0.97	0.97	0.97
Heat dissipation at I_e		P_V	W	22.5	45	66	120	165	225
Frame size				FS2	FS2	FS2	FS2	FS2	FS3

DA1-35… series Physical quantity		Symbol	Unit	017	022	022	028	034	043
Rated operational current		I_e	A	17	22	22	28	34	43
Overload current for 60 s every 600 s		i_I	A	25.5	33	33	42	51	64.5
Apparent power at rated operation	500 V	S	kVA	10.4	12.7	12.7	16	19.5	24.4
	600 V	S	kVA	12.5	15.2	15.5	19.3	23.4	29.3
Assigned Instance Motor Power	500 V	P	kW	11	15	15	18.5	22	30
	575 V	P	HP	15	20	20	25	30	40
Power side (primary side):									
Number of phases				three-phase					
Rated operating voltage		U_{LN}	V	500 V -10 % - 600 V +10 %, 50/60 Hz					
Input current (phase current)		I_{LN}	A	21	26	26	33	40	49
Minimum braking resistance		R_B	Ω	40	40	22	22	22	22
Switching frequency (pulse frequency)									
Default settings		f_{PWM}	kHz	8	8	8	8	8	8
Setting range		f_{PWM}	kHz	24	24	24	24	24	24
Maximum leakage current to earth (PE), without motor		I_{PE}	mA	–	–	–	–	–	–
Efficiency		η		0.97	0.97	0.97	0.97	0.97	0.97
Heat dissipation at I_e		P_V	W	330	450	450	555	660	850
Frame size				FS3	FS3	FS4	FS4	FS4	FS4

DA1-35… series Physical quantity		Symbol	Unit	054	065	078	105	130	150
Rated operational current		I_e	A	54	65	78	105	130	150
Overload current for 60 s every 600 s		i_I	A	81	97.5	117	157.5	195	225
Apparent power at rated operation	500 V	S	kVA	29.7	35.2	45.2	60.5	71.5	79.1
	600 V	S	kVA	35.6	42.2	54.3	72.6	85.9	95
Assigned Instance Motor Power	500 V	P	kW	37	45	55	75	90	110
	575 V	P	HP	50	60	75	100	125	150
Power side (primary side):									
Number of phases				three-phase					
Rated operating voltage		U_{LN}	V	500 V -10 % - 600 V +10 %, 50/60 Hz					
Input current (phase current)		I_{LN}	A	60	71	91	121	143	158
Minimum braking resistance		R_B	Ω	12	12	6	6	6	6
Switching frequency (pulse frequency)									
Default settings		f_{PWM}	kHz	8	8	4	4	4	4
Setting range		f_{PWM}	kHz	4 - 24	4 - 24	4 -16	4 - 16	4 - 12	4 - 12
Maximum leakage current to earth (PE), without motor		I_{PE}	mA	–	–	–	–	–	–
Efficiency		η		0.97	0.97	0.97	0.97	0.97	0.97
Heat dissipation at I_e		P_V	W	1110	1350	1650	2250	2700	3300
Frame size				FS5	FS5	FS6	FS6	FS6	FS6

6.3 Dimensions

6.3.1 Frame sizes FS2 and FS3 in IP20

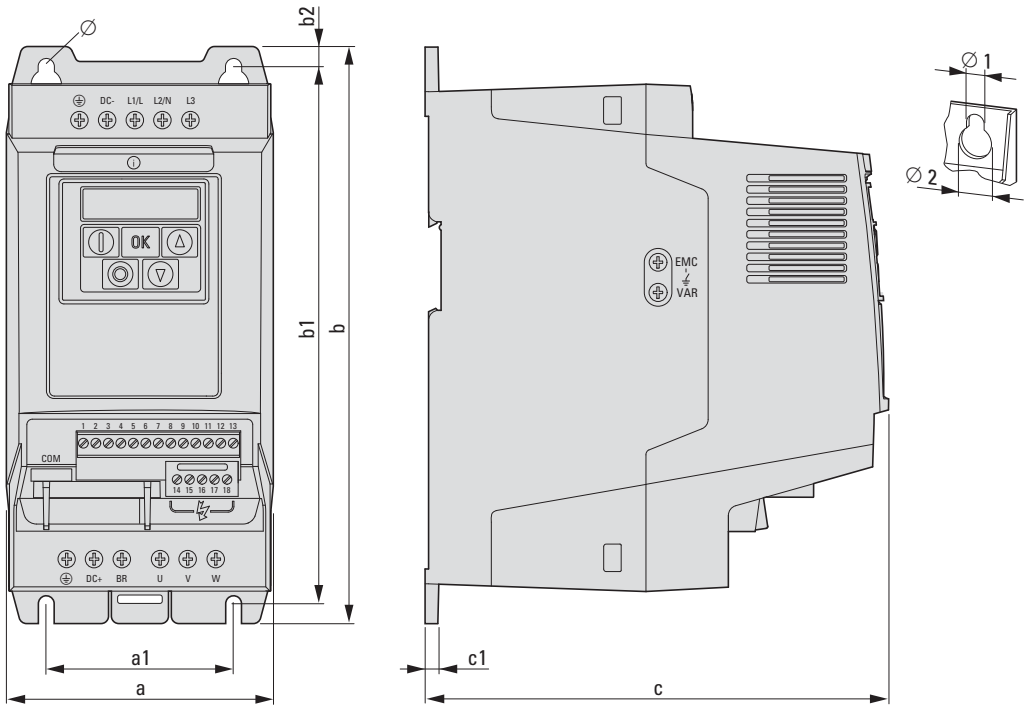

Figure 97:Sizes FS2 and FS3 in IP20 (NEMA 0)

Table 23: Dimensions and weights for sizes FS2 and FS3 in IP20 (NEMA 0)

Frame size	a [mm] (in)	a1 [mm] (in)	b [mm] (in)	b1 [mm] (in)	b2 [mm] (in)	c [mm] (in)	c1 [mm] (in)	Ø1 [mm] (in)	Ø2 [mm] (in)	m [kg] (lbs)
FS2	107 (4.2)	75 (3)	231 (9.1)	215 (8.5)	8 0.31	185.5 (7.3)	5 (0.2)	6.5 (0.26)	12.2 (0.48)	1.8 (3.97)
FS3	131 (5.2)	100 (3.9)	273 (10.8)	255 (10)	8.5 0.33	204 (8)	5 (0.2)	6.5 (0.26)	12.2 (0.48)	3.5 (7.72)

1 in = 1'' = 25.4 mm, 1 mm = 0.0394 in

6.3.2 Frame sizes FS4 to FS7 in IP55

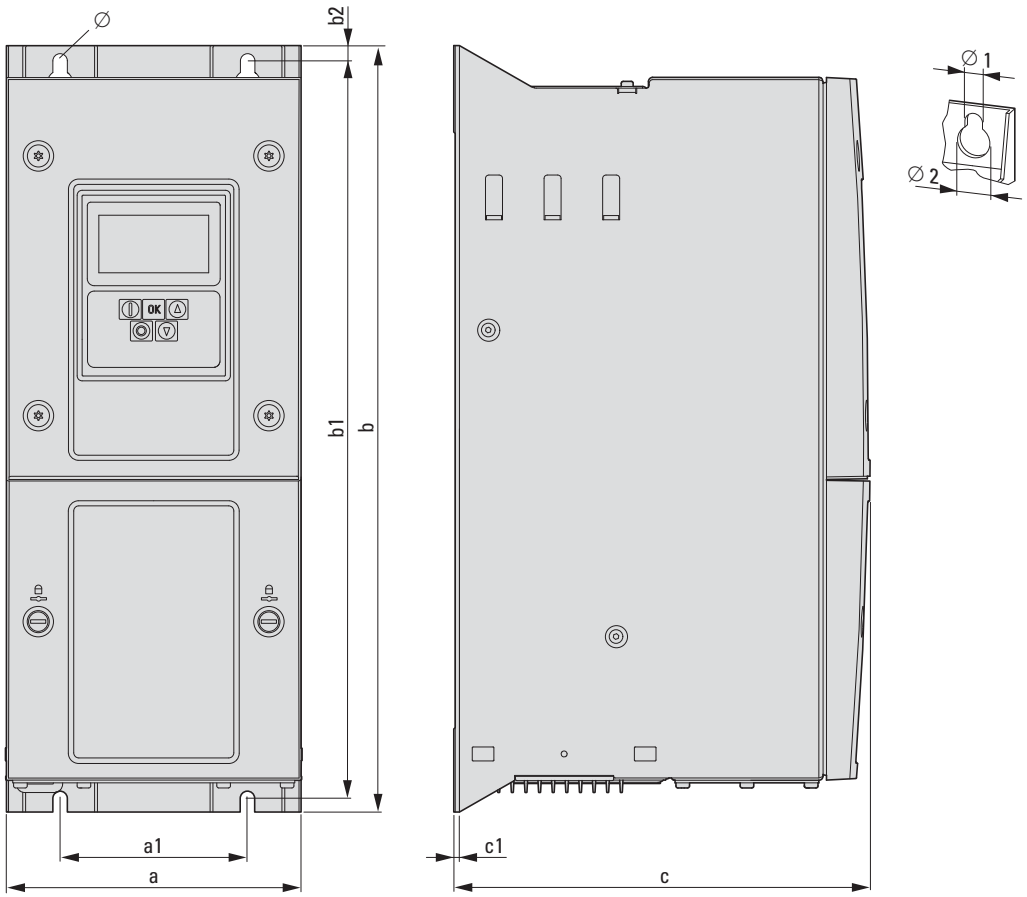

Figure 98:Sizes FS4 to FS7 in IP55 (NEMA 12)

Table 24: Dimensions and weights for sizes FS4 to FS7 in IP55 (NEMA 12)

Frame size	a [mm] (in)	a1 [mm] (in)	b [mm] (in)	b1 [mm] (in)	b2 [mm] (in)	c [mm] (in)	c1 [mm] (in)	Ø1 [mm] (in)	Ø2 [mm] (in)	m [kg] (lbs)
FS4	173 (6.8)	110 (175)	450 (17.7)	433 (17.1)	9 (0.35)	240 (9.7)	2 (0.79)	8 (0.32)	15 (0.59)	11.5 (25.35)
FS5	235 (9.3)	175 (6.9)	540 (21.3)	520 (20.5)	12 0.47	270 (10)	2 (0.79)	8 (0.32)	15 (0.59)	22.5 (49.60)
FS6	330 (13)	200 (7.9)	865 (34.1)	840 (33.1)	15 0.59	322 (13)	2 (0.79)	11 (0.43)	22 (0.87)	50 (110.23)
FS7	330 (14.2)	200 (7.9)	1280 (50.4)	1255 (49.5)	15 (0.59)	348 (14.2)	2 (0.79)	11 (0.43)	22 (0.87)	80 (176.37)

1 in = 1'' = 25.4 mm, 1 mm = 0.0394 in

6.3.3 Frame size FS8 in IP20

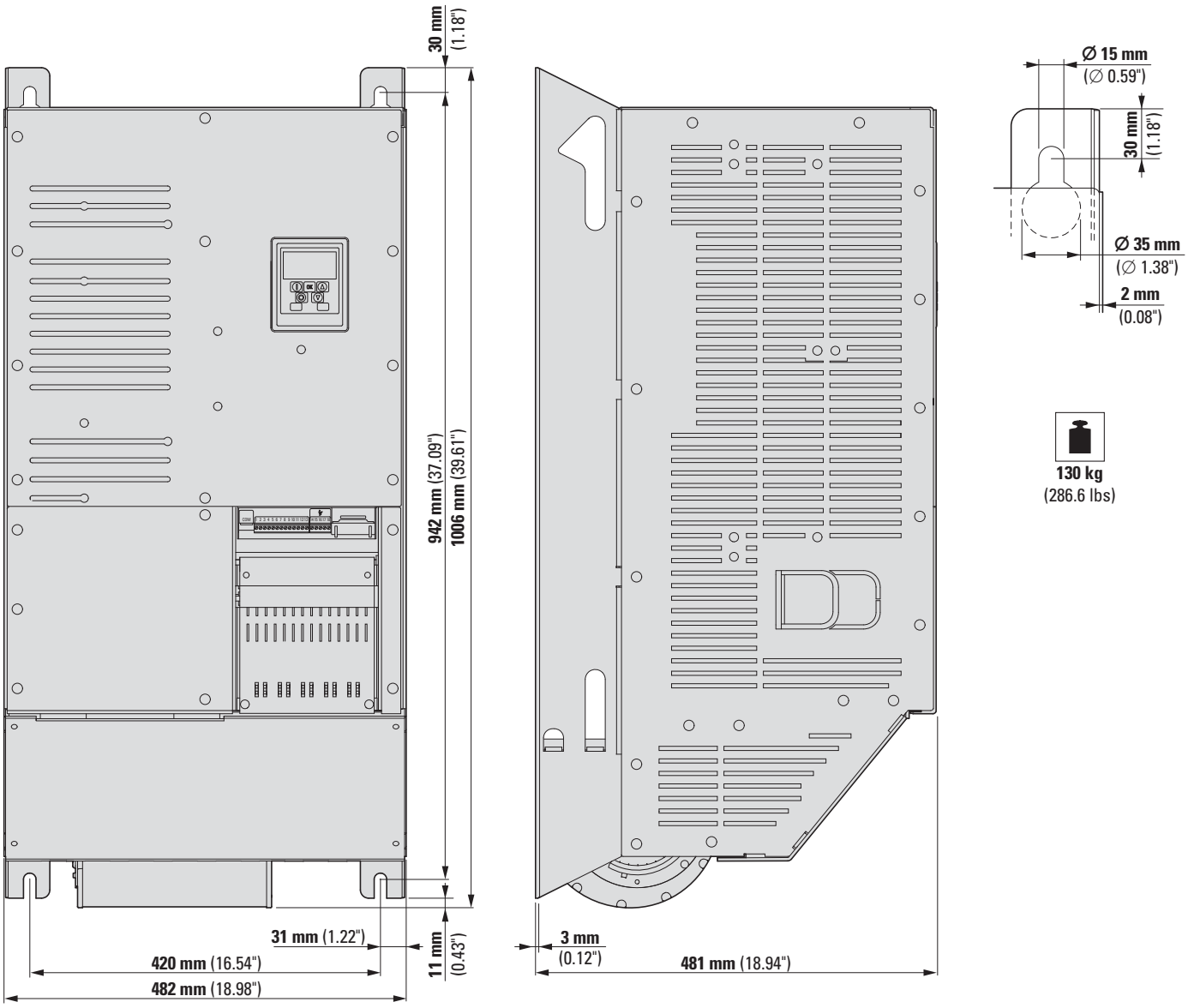

Figure 99:Frame size FS8 in IP20 (NEMA 0)

Table 25: Dimensions and weights for frame size FS8 in IP20 (NEMA 0)

Frame size	a [mm] (in)	a1 [mm] (in)	b [mm] (in)	b1 [mm] (in)	b2 [mm] (in)	c [mm] (in)	c1 [mm] (in)	Ø1 [mm] (in)	Ø2 [mm] (in)	m [kg] (lbs)
FS8	480 (18.9)	420 (16.5)	1005 (39.6)	944 (37.2)	30 (1.18)	480 (18.9)	3 (0.12)	15 (0.59)	35 (1.38)	130 (286.6)

1 in = 1'' = 25.4 mm, 1 mm = 0.0394 in

6.3.4 Frame sizes FS2 and FS3 in IP66

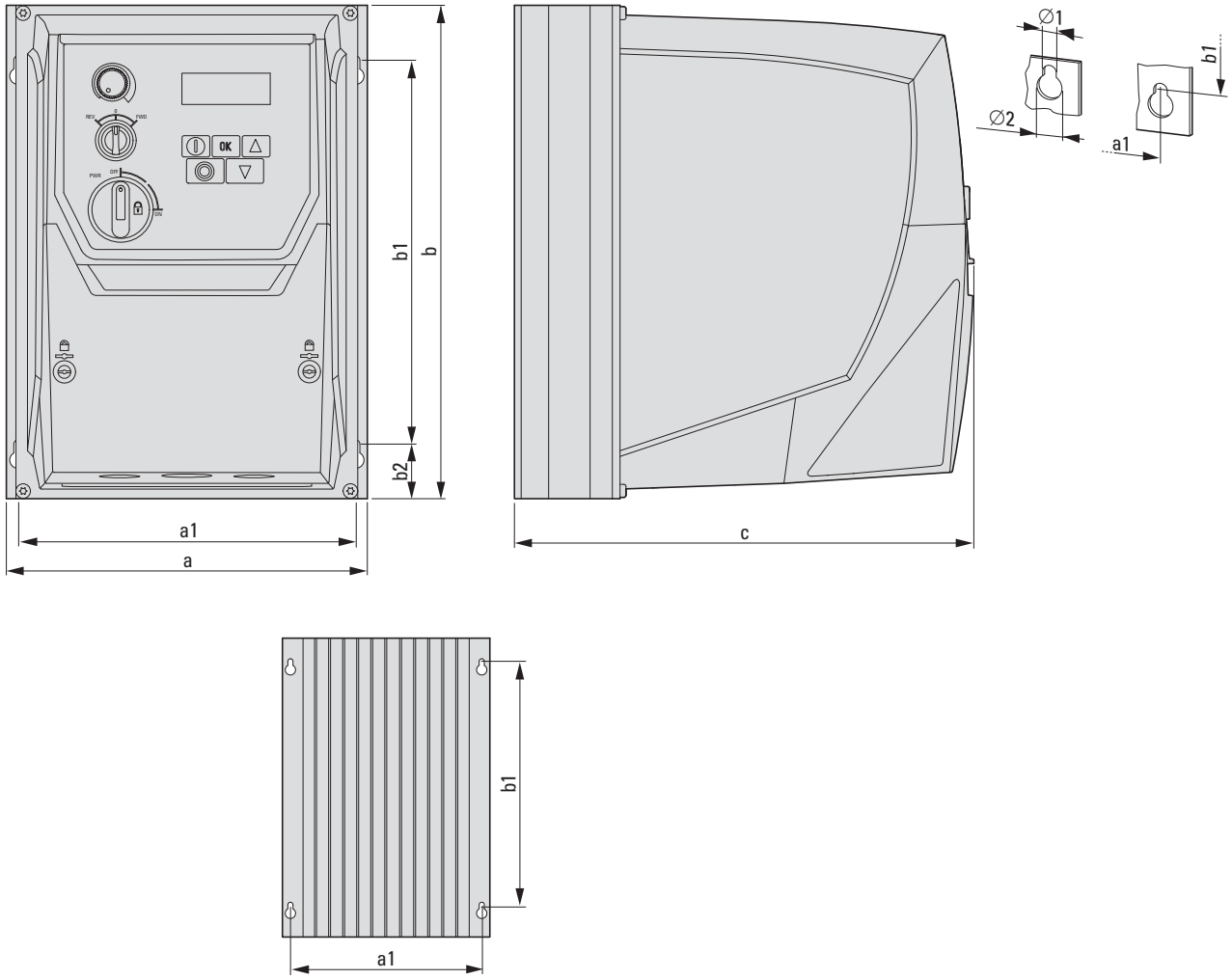

Figure 100:Frame sizes FS2 and FS3 in IP66 (NEMA 4X)

Table 26: Dimensions and weights for sizes FS2 and FS3 in IP66 (NEMA 4X)

Frame size	a [mm] (in)	a1 [mm] (in)	b [mm] (in)	b1 [mm] (in)	b2 [mm] (in)	c [mm] (in)	c1 [mm] (in)	Ø1 [mm] (in)	Ø2 [mm] (in)	m [kg] (lbs)
FS2	188 (7.4)	176 (6.93)	257 (10.12)	200 (7.87)	20 (0.79)	239 (9.42)	3.5 (0.14)	4.2 (0.16)	8.5 (0.33)	4.8 (10.6)
FS3	211 (8.29)	198 (7.78)	310 (12.2)	252 (9.9)	25 (0.98)	266 (10.48)	3.5 (0.14)	4.2 (0.16)	8.5 (0.33)	7.3 (16.1)

1 in = 1'' = 25.4 mm, 1 mm = 0.0394 in

6.4 Cable cross-sections

Table 27: Cable cross-sections – voltage class 230 V

Device Type	Frame size	Maximum terminal capacity		Input current	Feeder unit cross-sectional area		Output current	Motor connection cross-sectional area[2]	
				I_{LN}	L1/L, L2/N, L3, PE		I_e	U, V, W, PE	
		mm²	AWG/ kcmil[1]	A	mm²	AWG/ kcmil[1]	A	mm²	AWG/ kcmil[1]
Mains voltage: 230 V Supply voltage (50/60 Hz) U_{LN} 200 (-10%) - 240 (+10 %) V U_e 230 V AC, single-phase / U_2 230 V AC, three-phase									
DA1-124D3FB-…	FS2	8	8	9	2.5	14	4.3	1.5	14
DA1-127D0FB-…	FS2	8	8	13	4	12	7	1.5	14
DA1-12011FB-…	FS2	8	8	19	4	10	10.5	1.5	14
Mains voltage: 230 V Supply voltage (50/60 Hz) U_{LN} 200 (-10%) - 240 (+10 %) V U_e 230 V AC, three-phase / U_2 230 V AC, three-phase									
DA1-324D3FB-…	FS2	8	8	6	1.5	14	4.3	1.5	14
DA1-327D0FB-…	FS2	8	8	11	2.5	14	7	1.5	14
DA1-32011FB-…	FS2	8	8	13	2.5	12	10.5	1.5	14
DA1-32018FB-…	FS3	8	8	21	6	10	18	2.5	10
DA1-32024FB-A20C	FS3	8	8	26	10	8	24	4	10
DA1-32024FB-B55C	FS4	16	5	27	10	8	24	4	10
DA1-32030FB-B55C	FS4	16	5	33	16	8	30	6	8
DA1-32046FB-B55C	FS4	16	5	50	25	4	46	10	6
DA1-32061FB-B55C	FS5	35	2	64	35	3	61	16	4
DA1-32072FB-B55C	FS5	35	2	74	50	2	72	25	3
DA1-32090FB-B55C	FS6	150	300	99	70	1	90	35	2
DA1-32110FB-B55C	FS6	150	300	121	70	2/0	110	50	1/0
DA1-32150FB-B55C	FS6	150	300	160	120	4/0	150	70	3/0
DA1-32180FB-B55C	FS6	150	300	188	120	4/0	180	95	4/0
DA1-32202FB-B55C	FS7	150	300	207	185	300	202	120	250
DA1-32248FB-B55C	FS7	150	300	246	2 x 95	400	248	150	350

1) AWG = American wire gauge
kcmil = Thousands of circular mils (1 kcmil = 0.5067 mm²)
2) Maximum motor cable length = 100 m (330 ft)

Table 28: Cable cross-sections – voltage class 400 V

Device Type	Frame size	Maximum terminal capacity		Input current	Feeder unit cross-sectional area		Output current	Motor connection cross-sectional area[2]	
	I_{LN}			I_{LN}	L1/L, L2/N, L3, PE		I_e	U, V, W, PE	
	A	mm²	AWG/ kcmil[1]	A	mm²	AWG/ kcmil[1]	A	mm²	AWG/ kcmil[1]
Mains voltage: 400 V Supply voltage (50/60 Hz) U_{LN} 380 (-10%) - 480 (+10 %) V U_e 400 V AC, three-phase / U_2 400 V AC, three-phase									
DA1-342D2FB-…	FS2	8	8	3.5	1.5	14	2.2	1.5	14
DA1-344D1FB-…	FS2	8	8	6	1.5	14	4.1	1.5	14
DA1-345D8FB-…	FS2	8	8	7.5	1.5	14	5.8	1.5	14
DA1-349D5FB-…	FS2	8	8	12	2.5	14	9.5	1.5	14
DA1-34014FB-…	FS3	8	8	17	4	10	14	1.5	12
DA1-34018FB-…	FS3	8	8	22	6	10	18	2.5	10
DA1-34024FB-A20C	FS3	8	8	28	8	8	24	4	10
DA1-34024FB-B55C	FS4	16	5	28	10	5	24	4	10
DA1-34030FB-B55C	FS4	16	5	34	16	8	30	6	8
DA1-34039FB-B55C	FS4	16	5	44	16	6	39	10	8
DA1-34046FB-B55C	FS4	16	5	52	16	5	46	10	6
DA1-34061FB-B55C	FS5	35	2	66	25	4	61	16	4
DA1-34072FB-B55C	FS5	35	2	77	35	3	72	25	3
DA1-34090FB-B55C	FS6	150	300	103	50	1	90	35	2
DA1-34110FB-B55C	FS6	150	300	126	70	1/0	110	50	1/0
DA1-34150FB-B55C	FS6	150	300	165	95	3/0	150	70	3/0
DA1-34180FB-B55C	FS6	150	300	192	120	4/0	180	95	4/0
DA1-34202FB-B55C	FS7	150	300	211	185	300	202	120	250
DA1-34240FB-B55C	FS7	150	300	241	185	350	240	150	350
DA1-34302FB-B55C	FS7	150	300	299	2 x 95	600	302	2 x 70	500
DA1-34370FB-B20C	FS8	240	450	377	2 x 150	750	370	2 x 95	750
DA1-34450FB-B20C	FS8	240	450	459	2 x 150	1250	450	2 x 120	1250

1) AWG = American wire gauge
kcmil = Thousands of circular mils (1 kcmil = 0.5067 mm²)
2) Maximum motor cable length = 100 m (330 ft)

Table 29: Cable cross-sections – voltage class 575 V

Device Type	Frame size	Maximum terminal capacity		Input current	Feeder unit cross-sectional area		Output current	Motor connection cross-sectional area[2]	
				I_{LN}	L1/L, L2/N, L3, PE		I_e	U, V, W, PE	
		mm²	AWG/ kcmil[1]	A	mm²	AWG/ kcmil[1]	A	mm²	AWG/ kcmil[1]
Mains voltage: 575 V Supply voltage (50/60 Hz) U_{LN} 500 (-10%) - 600 (+10 %) V U_e 575 V AC, three-phase / U_2 575 V AC, three-phase									
DA1-352D1NB-…	FS2	8	8	3.5	1.5	14	2.1	1.5	14
DA1-353D1NB-…	FS2	8	8	4.5	1.5	14	3.1	1.5	14
DA1-354D1NB-…	FS2	8	8	5	1.5	14	4.1	1.5	14
DA1-356D5NB-…	FS2	8	8	9	1.5	14	6.5	1.5	14
DA1-359D0NB-…	FS2	8	8	12	2.5	14	9	1.5	14
DA1-35012NB-…	FS3	8	8	15	4	12	12	1.5	14
DA1-35017NB-…	FS3	8	8	21	6	10	17	2.5	10
DA1-35022NB-A20C	FS3	8	8	26	10	8	22	4	10
DA1-35022NB-B55C	FS4	16	5	26	10	8	22	4	10
DA1-35028NB-B55C	FS4	16	5	33	16	8	28	6	8
DA1-35034NB-B55C	FS4	16	5	40	16	6	34	6	8
DA1-35043NB-B55C	FS4	16	5	49	16	6	43	10	6
DA1-35054NB-B55C	FS5	35	2	60	25	4	54	16	4
DA1-35065NB-B55C	FS5	35	2	71	35	3	65	25	4
DA1-35078NB-B55C	FS6	150	300	91	50	2	78	25	3
DA1-35105NB-B55C	FS6	150	300	121	70	1/0	105	50	1/0
DA1-35130NB-B55C	FS6	150	300	143	70	2/0	130	70	2/0
DA1-35150NB-B55C	FS6	150	300	158	95	2/0	150	70	3/0

1) AWG = American wire gauge
kcmil = Thousands of circular mils (1 kcmil = 0.5067 mm²)
2) Maximum motor cable length = 100 m (330 ft)

6.5 Fuses

The Eaton circuit-breakers and fuses listed below are examples and can be used without additional measures. If you use other circuit-breakers and/or fuses, make sure to take their protection characteristic and operational voltage into account. When using other circuit-breakers, it may be necessary to also use fuses depending on the circuit-breaker's model, design, and settings. There may also be limitations concerning the short-circuit capacity and the supply network's characteristic, and these must also be taken into account when selecting circuit-breakers and/or fuses.

Table 30: Protective devices

	Symbol	Description
①	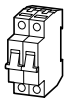	**Miniature circuit breakers** FAZ-B…/1N: 1 pole + N FAZ-B…/2: 2 pole FAZ-B…/3: 3 pole Rated operating voltage: 230/400 V AC Switching capacity: 15 kA
②	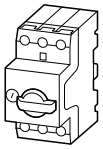	**Motor-Protective Circuit-Breakers** PKM0…, PKZM4…: 3 pole Rated operating voltage: 690V AC Switching capacity: • PKM0: 150 kA to 12 A and 50 kA to 32 A • PKZM4: 50 kA
③		**Circuit-breaker** NZMC…: 3 pole Rated operating voltage: 690V AC Switching capacity: 36 kA
④		**Fuse** Rated operating voltage: 500V AC Switching capacity: 50 kA Size: DII, E27 / DIII, E33 Fuse base: S27… / S33…
⑤		**Fuse Class J** Rated operating voltage: 600V AC Switching capacity: 300 kA Fuse bases: • up to 30 A: J60030… • 35 - 60 A: J60060… • 70 - 100 A: JM60100… • 110 - 200 A: JM60200… • 225 - 400 A: JM60400… • 450 - 600 A: JM60600…
⑥	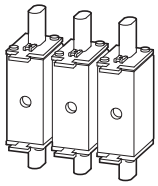	**Fuse gG** Rated operating voltage: • 400 V AC (NHG…B-400) • 500 V AC (NHG…B) • 660 V AC (NHG…B-660) • 690 V AC (NHG…B-690) Switching capacity: 120 kA Size NHG…: 000 to 3 Fuse base: NH fuse bases (SD = 1 pole, TD = 3 pole)

Table 31: Specified fuses – voltage class 230 V

Device Type	Input current	Fuse or miniature circuit-breaker					
	I_{LN}	IEC (Type B or gG)				UL (Class CC or J)	
	A	A	Eaton type			A	Eaton type
Mains voltage: 230 V Supply voltage (50/60 Hz) U_{LN} 200 (-10%) - 240 (+10 %) V U_e 230 V AC, single-phase /U_2 230 V AC, three-phase							
			①	②, 2 phase	④		⑤
DA1-124D3FB-…	9	16	FAZ-B16/1N	FAZ-B16/2	Z-DII/SE-16A/GG	15	LPJ-15SP
DA1-127D0FB-…	13	20	FAZ-B20/1N	FAZ-B20/2	Z-DII/SE-20A/GG	20	LPJ-20SP
DA1-12011FB-…	19	25	FAZ-B25/1N	FAZ-B25/2	Z-DII/SE-25A/GG	25	LPJ-25SP
Mains voltage: 230 V Supply voltage (50/60 Hz) U_{LN} 200 (-10%) - 240 (+10 %) V U_e 230 V AC, three-phase / U_2 230 V AC, three-phase							
			①	②, ③	④, ⑥		⑤
DA1-324D3FB-…	6	10	FAZ-B10/3	PKM0-10	Z-DII/SE-10A/GG	10	LPJ-10SP
DA1-327D0FB-…	11	16	FAZ-B16/3	PKM0-16	Z-DII/SE-16A/GG	15	LPJ-15SP
DA1-32011FB-…	13	16	FAZ-B16/3	PKM0-16	Z-DII/SE-16A/GG	17.5	LPJ-17½SP
DA1-32018FB-…	21	32	FAZ-B32/3	PKM0-32	Z-DII/SE-35A/GG	30	LPJ-30SP
DA1-32024FB-A20C	26	40	FAZ-B40/3	PKZM4-40	Z-DIII/SE-50A/GG	40	LPJ-40SP
DA1-32024FB-B55C	27	40	FAZ-B40/3	PKZM4-40	Z-DIII/SE-50A/GG	40	LPJ-40SP
DA1-32030FB-B55C	33	50	FAZ-B50/3	PKZM4-50	Z-DIII/SE-50A/GG	50	LPJ-50SP
DA1-32046FB-B55C	50	80	–	NZMC1-S80	80NHG000B-400	70	LPJ-70SP
DA1-32061FB-B55C	64	100	–	NZMC1-S100	100HG000B-400	90	LPJ-90SP
DA1-32072FB-B55C	74	125	–	NZMC2-S125	125NHG00B-400	110	LPJ-110SP
DA1-32090FB-B55C	99	160	–	NZMC2-S160	160NHG00B-400	150	LPJ-150SP
DA1-32110FB-B55C	121	160	–	NZMC2-S160	160NHG00B-400	175	LPJ-175SP
DA1-32150FB-B55C	160	250	–	NZMC3-S250	250NHG1B-400	225	LPJ-225SP
DA1-32180FB-B55C	188	250	–	NZMC3-S250	250NHG1B-400	250	LPJ-250SP
DA1-32202FB-B55C	207	300	–	NZMC3-S320	315NHG2B-400	300	LPJ-300SP
DA1-32248FB-B55C	246	400	–	NZMC3-S400	400NHG2B-400	350	LPJ-350SP

Note: Numbers ①, ②, ③, ④, ⑤, ⑥ refer to the drawings in Table 30.

Table 32: Specified fuses – voltage class 400 V

Device Type	Input current	Fuse or miniature circuit-breaker					
		IEC (Type B or gG)				UL (Class CC or J)	
	I_{LN}						
	A	A	Eaton type			A	Eaton type
Mains voltage: 400 V **Supply voltage (50/60 Hz) U_{LN} 380 (-10%) - 480 (+10 %) V** **U_e 400 V AC, three-phase / U_2 400 V AC, three-phase**							
			①, max. 400 V	②, ③	④, ⑥		⑤
DA1-342D2FB-…	3.5	6	FAZ-B6/3	PKM0-6.3	Z-DII/SE-6A/GG	6	LPJ-6SP
DA1-344D1FB-…	6	10	FAZ-B10/3	PKM0-10	Z-DII/SE-10A/GG	10	LPJ-10SP
DA1-345D8FB-…	7.5	10	FAZ-B10/3	PKM0-10	Z-DII/SE-10A/GG	10	LPJ-10SP
DA1-349D5FB-…	12	16	FAZ-B16/3	PKM0-16	Z-DII/SE-16A/GG	15	LPJ-15SP
DA1-34014FB-…	17	25	FAZ-B25/3	PKM0-25	Z-DII/SE-25A/GG	25	LPJ-25SP
DA1-34018FB-…	22	32	FAZ-B32/3	PKM0-32	Z-DIII/SE-35A/GG	30	LPJ-30SP
DA1-34024FB-…	28	40	FAZ-B40/3	PKZM4-40	Z-DIII/SE-50A/GG	40	LPJ-40SP
DA1-34030FB-B55C	34	50	FAZ-B50/3	PKZM4-50	Z-DIII/SE-50A/GG	50	LPJ-50SP
DA1-34039FB-B55C	44	63	FAZ-B63/3	PKZM4-58	Z-DIII/SE-63A/GG	60	LPJ-60SP
DA1-34046FB-B55C	52	80	–	NZMC1-S80	80NHG000B-400	70	LPJ-70SP
DA1-34061FB-B55C	66	80	–	NZMC1-S80	80NHG000B-400	80	LPJ-80SP
DA1-34072FB-B55C	77	100	–	NZMC1-S100	100HG000B-400	100	LPJ-100SP
DA1-34090FB-B55C	103	125	–	NZMC2-S125	125NHG00B-400	125	LPJ-125SP
DA1-34110FB-B55C	126	160	–	NZMC2-S160	160NHG00B-400	150	LPJ-150SP
DA1-34150FB-B55C	165	200	–	NZMC2-S200	200NHG1B-400	200	LPJ-200SP
DA1-34180FB-B55C	192	250	–	NZMC3-S250	250NHG1B-400	250	LPJ-250SP
DA1-34202FB-B55C	211	300	–	NZMC3-S320	315NHG2B-400	300	LPJ-300SP
DA1-34240FB-B55C	241	400	–	NZMC3-S400	400NHG2B-400	350	LPJ-350SP
DA1-34302FB-B55C	299	400	–	NZMC3-S400	400NHG2B-400	400	LPJ-400SP
DA1-34370FB-B20C	377	500	–	NZMC3-S500	500NHG3B-400	500	LPJ-500SP
DA1-34450FB-B20C	459	600	–	NZMN3-AE630	630NHG3B-400	600	LPJ-600SP

Note: Numbers ①, ②, ③, ④, ⑤, ⑥ refer to the drawings in Table 30.

Table 33: Specified fuses – voltage class 575 V

Device Type	Input current	Fuse or miniature circuit-breaker					
	I_{LN}	IEC (Type B or gG)				UL (Class CC or J)	
	A	A	Eaton type			A	Eaton type
Mains voltage: 575 V Supply voltage (50/60 Hz) U_{LN} 500 (-10%) - 600 (+10 %) V U_e 575 V AC, three-phase / U_2 575 V AC, three-phase							
			②, ③	⑥, max. 500 V	⑥		⑤
DA1-352D1NB-…	3.5	6	PKM0-6.3	6NHG000B	6NHG000B-690	6	LPJ-6SP
DA1-353D1NB-…	4.5	10	PKM0-10	10NHG000B	10NHG000B-690	6	LPJ-6SP
DA1-354D1NB-…	5	10	PKM0-10	10NHG000B	10NHG000B-690	10	LPJ-10SP
DA1-356D5NB-…	9	16	PKM0-16	16NHG000B	16NHG000B-690	15	LPJ-15SP
DA1-359D0NB-…	12	16	PKM0-16	16NHG000B	16NHG000B-690	15	LPJ-15SP
DA1-35012NB-…	15	20	PKM0-20	20NHG000B	20NHG000B-690	20	LPJ-20SP
DA1-35017NB-…	21	32	PKM0-32	32NHG000B	32NHG000B-690	30	LPJ-30SP
DA1-35022NB-…	26	40	PKZM4-40	40NHG000B	40NHG000B-690	35	LPJ-35SP
DA1-35028NB-B55C	33	50	PKZM4-50	50NHG000B	50NHG000B-690	45	LPJ-45SP
DA1-35034NB-B55C	40	63	NZMC1-S63	63NHG000B	63NHG000B-690	60	LPJ-60SP
DA1-35043NB-B55C	49	63	NZMC1-S80	63NHG000B	63NHG000B-690	70	LPJ-70SP
DA1-35054NB-B55C	60	80	NZMC1-S80	80NHG000B	80NHG00B-690	80	LPJ-80SP
DA1-35065NB-B55C	71	100	NZMC1-S100	100NHG000B	100NHG00B-690	100	LPJ-100SP
DA1-35078NB-B55C	91	125	NZMC2-S125	125NHG00B	125NHG00B-690	125	LPJ-125SP
DA1-35105NB-B55C	121	160	NZMC2-S160	160NHG00B	160NHG00B-660	150	LPJ-150SP
DA1-35130NB-B55C	143	160	NZMC2-S160	160NHG00B	160NHG00B-660	175	LPJ-175SP
DA1-35150NB-B55C	158	200	NZMC2-S200	200NHG1B	200NHG1B-690	175	LPJ-175SP

Note: Numbers ①, ②, ③, ④, ⑤, ⑥ refer to the drawings in Table 30.

6.6 Mains contactors

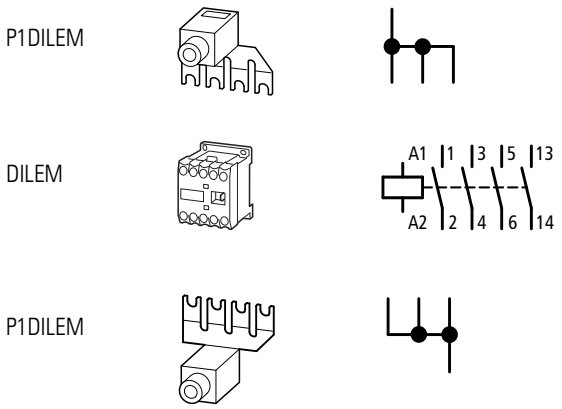

Figure 101: Mains contactor at single-phase connection (DA1-12…)

Table 34: Mains contactors – DA1 voltage class 230 V (single-phase)

Device Type	Input current	Mains contactor (thermal current AC-1)			
	I_{LN}	Type max. 50 °C and IEC		Type max. 40 °C and UL	
	A		A		A
Mains voltage: 230 V Supply voltage (50/60 Hz) U_{LN} 200 (-10%) - 240 (+10 %) V U_e 230 V AC, single-phase / U_2 230 V AC, three-phase					
DA1-124D3FB-…	9	DILEM-...+P1DILEM	50	DILEM-...+P1DILEM	50
DA1-127D0FB-…	13	DILEM-...+P1DILEM	50	DILEM-...+P1DILEM	50
DA1-12011FB-…	19	DILEM-...+P1DILEM	50	DILEM-...+P1DILEM	50

Table 35: Mains contactors – DA1 voltage class 230 V (three-phase)

Device Type	Input current	Mains contactor (thermal current AC-1)			
	I_{LN}	Type max. 50 °C and IEC		Type max. 40 °C and UL	
	A		A		A
Mains voltage: 230 V Supply voltage (50/60 Hz) U_{LN} 200 (-10%) - 240 (+10 %) V U_e 230 V AC, three-phase / U_2 230 V AC, three-phase					
DA1-324D3FB-…	6	DILEM-…	20	DILEM-…	20
DA1-327D0FB-…	11	DILEM-…	20	DILEM-…	20
DA1-32011FB-…	13	DILEM-…	20	DILEM-…	20
DA1-32018FB-…	21	DILM17-…	38	DILM17-…	40
DA1-32024FB-A20C	26	DILM17-…	38	DILM17-…	40
DA1-32024FB-B55C	27	DILM17-…	38	DILM17-…	40
DA1-32030FB-B55C	33	DILM17-…	38	DILM25-…	45
DA1-32046FB-B55C	50	DILM40-…	57	DILM50-…	80
DA1-32061FB-B55C	64	DILM50-…	71	DILM50-…	80
DA1-32072FB-B55C	74	DILM65-…	88	DILM80-…	110
DA1-32090FB-B55C	99	DILM95-…	125	DILM95-…	130
DA1-32110FB-B55C	121	DILM95-…	125	DILM115-…	160
DA1-32150FB-B55C	160	DILM150-…	180	DILM170-…	225
DA1-32180FB-B55C	188	DILM170-…	200	DILM185A-…	337
DA1-32202FB-B55C	207	DILM185A-…	301	DILM185A-…	337
DA1-32248FB-B55C	246	DILM185A-…	301	DILM185A-…	337

Table 36: Mains contactor – DA1 voltage class 400 V

Device Type	Input current	Mains contactor (thermal current AC-1)			
	I_{LN}	Type max. 50 °C and IEC		Type max. 40 °C and UL	
	A		A		A
Mains voltage: 400 V Supply voltage (50/60 Hz) U_{LN} 380 (-10%) - 480 (+10 %) V U_e 400 V AC, three-phase / U_2 400 V AC, three-phase					
DA1-342D2FB-…	3.5	DILEM-…	20	DILEM-…	20
DA1-344D1FB-…	6	DILEM-…	20	DILEM-…	20
DA1-345D8FB-…	7.5	DILEM-…	20	DILEM-…	20
DA1-349D5FB-…	12	DILEM-…	20	DILEM-…	20
DA1-34014FB-…	17	DILEM-…	20	DILM7-…	22
DA1-34018FB-…	22	DILM17-…	38	DILM17-…	40
DA1-34024FB-…	28	DILM17-…	38	DILM17-…	40
DA1-34030FB-B55C	34	DILM17-…	38	DILM25-…	45
DA1-34039FB-B55C	44	DILM40-…	57	DILM40-…	60
DA1-34046FB-B55C	52	DILM40-…	57	DILM50-…	80
DA1-34061FB-B55C	66	DILM50-…	71	DILM65-…	98
DA1-34072FB-B55C	77	DILM65-…	88	DILM65-…	98
DA1-34090FB-B55C	103	DILM95-…	125	DILM95-…	130
DA1-34110FB-B55C	126	DILM115-…	142	DILM150-…	180
DA1-34150FB-B55C	165	DILM150-…	180	DILM170-…	225
DA1-34180FB-B55C	192	DILM185A-…	301	DILM185A-…	337
DA1-34202FB-B55C	211	DILM185A-…	301	DILM185A-…	337
DA1-34240FB-B55C	241	DILM185A-…	301	DILM185A-…	337
DA1-34302FB-B55C	299	DILM185A-…	301	DILM250-…	400
DA1-34370FB-B20C[1)]	377	DILM300A-…	385	DILM400-…	612
DA1-34450FB-B20C[2)]	459	DILM400-…	548	DILM400-…	612

If it is not guaranteed that the system percentage impedance is greater than or equal to 1%, a mains choke must be connected.
Your u_K value should fall between 1 and 4%.

Examples:
1) DA1-34370FB-320C with mains choke DX-LN3-370
2) DA1-34450FB-320C with mains choke DX-LN3-450

Table 37: Mains contactor – DA1 voltage class 575 V

Device Type	Input current	Mains contactor (thermal current AC-1)			
	I_{LN}	Type max. 50 °C and IEC		Type max. 40 °C and UL	
	A		A		A
Mains voltage: 575 V Supply voltage (50/60 Hz) U_{LN} 500 (-10%) - 600 (+10 %) V U_e 575 V AC, three-phase / U_2 575 V AC, three-phase					
DA1-352D1NB-…	3.5	DILEM-…	20	DILEM-…	20
DA1-353D1NB-…	4.5	DILEM-…	20	DILEM-…	20
DA1-354D1NB-…	5	DILEM-…	20	DILEM-…	20
DA1-356D5NB-…	9	DILEM-…	20	DILEM-…	20
DA1-359D0NB-…	12	DILEM-…	20	DILEM-…	20
DA1-35012NB-…	15	DILEM-…	20	DILEM-…	20
DA1-35017NB-…	21	DILM7-…	21	DILM17-…	40
DA1-35022NB-…	26	DILM17-…	38	DILM17-…	40
DA1-35028NB-B55C	33	DILM17-…	38	DILM25-…	45
DA1-35034NB-B55C	40	DILM25-…	43	DILM40-…	60
DA1-35043NB-B55C	49	DILM40-…	57	DILM50-…	80
DA1-35054NB-B55C	60	DILM50-…	71	DILM50-…	80
DA1-35065NB-B55C	71	DILM50-…	71	DILM65-…	98
DA1-35078NB-B55C	91	DILM80-…	98	DILM95-…	130
DA1-35105NB-B55C	121	DILM95-…	125	DILM115-…	160
DA1-35130NB-B55C	143	DILM150-…	180	DILM150-…	190
DA1-35150NB-B55C	158	DILM150-…	180	DILM170-…	225



Technical data on the mains contactors can be found in the main catalog HPL, Contactors DILEM and DILM.

6.7 Mains chokes

DX-LN1…

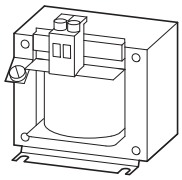

Figure 102:DEX-LN1… mains chokes (single-phase)

Table 38: Assigned mains chokes – DA1 voltage class 230 V (single-phase)

Device Type	Input current	Mains choke U_{LN} max. 240 V +10% 50/60 Hz ±10 %	
	I_{LN}	max. 50 °C	
	A	Type	A
Mains voltage: 230 V Supply voltage (50/60 Hz) U_{LN} 200 (-10%) - 240 (+10 %) V U_e 230 V AC, single-phase / U_2 230 V AC, three-phase			
DA1-124D3FB-…	9	DX-LN1-013	13
DA1-127D0FB-…	13	DX-LN1-018	18
DA1-12011FB-…	19	DX-LN1-024	24

DX-LN3…

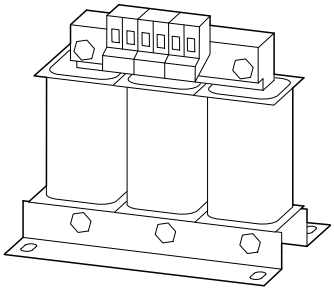

Figure 103:Mains chokes DEX-LN3… (three-phase)

Table 39: Assigned mains chokes – DA1 voltage class 230 V (three-phase)

Device Type	Input current	Mains choke U_{LN} max. 500 V +10%, 50/60 Hz ±10 %			
	I_{LN}	max. 40 °C		max. 50 °C	
	A	Type	A	Type	A
Mains voltage: 230 V Supply voltage (50/60 Hz) U_{LN} 200 (-10%) - 240 (+10 %) V U_e 230 V AC, three-phase / U_2 230 V AC, three-phase					
DA1-324D3FB-…	6	DX-LN3-006	6	DX-LN3-006	6
DA1-327D0FB-…	11	DX-LN3-010	10	DX-LN3-010	10
DA1-32011FB-…	13	DX-LN3-016	16	DX-LN3-016	16
DA1-32018FB-…	21	DX-LN3-025	25	DX-LN3-025	25
DA1-32024FB-A20C	26	DX-LN3-025	25	DX-LN3-040	40
DA1-32024FB-B55C	27	DX-LN3-040	40	DX-LN3-040	40
DA1-32030FB-B55C	33	DX-LN3-040	40	DX-LN3-040	40
DA1-32046FB-B55C	50	DX-LN3-050	50	DX-LN3-080	80
DA1-32061FB-B55C[1)]	64	DX-LN3-080	80	DX-LN3-080	80
DA1-32072FB-B55C[1)]	74	DX-LN3-080	80	DX-LN3-080	80
DA1-32090FB-B55C[1)]	99	DX-LN3-100	100	DX-LN3-120	120
DA1-32110FB-B55C[1)]	121	DX-LN3-120	120	DX-LN3-160	160
DA1-32150FB-B55C[1)]	160	DX-LN3-160	160	DX-LN3-200	200
DA1-32180FB-B55C[1)]	188	DX-LN3-200	200	DX-LN3-200	200
DA1-32202FB-B55C[1)]	207	DX-LN3-250	250	DX-LN3-250	250
DA1-32248FB-B55C[1)]	246	DX-LN3-250	250	DX-LN3-300	300

1) DA1 variable frequency drive with DC link choke

Table 40: Assigned mains chokes – DA1 voltage class 400 V (three-phase)

Device Type	Input current	Mains choke U_{LN} max. 500 V +10%, 50/60 Hz ±10 %			
	I_{LN}	max. 40 °C		max. 50 °C	
	A	Type	A	Type	A
Mains voltage: 400 V Supply voltage (50/60 Hz) U_{LN} 380 (-10%) - 480 (+10 %) V U_e 400 V AC, three-phase / U_2 400 V AC, three-phase					
DA1-342D2FB-…	3.5	DX-LN3-006	6	DX-LN3-006	6
DA1-344D1FB-…	6	DX-LN3-006	6	DX-LN3-006	6
DA1-345D8FB-…	7.5	DX-LN3-010	10	DX-LN3-010	10
DA1-349D5FB-…	12	DX-LN3-016	16	DX-LN3-016	16
DA1-34014FB-…	17	DX-LN3-025	25	DX-LN3-025	25
DA1-34018FB-…	22	DX-LN3-025	25	DX-LN3-025	25
DA1-34024FB-…	28	DX-LN3-040	40	DX-LN3-040	40
DA1-34030FB-B55C	34	DX-LN3-040	40	DX-LN3-040	40
DA1-34039FB-B55C	44	DX-LN3-050	50	DX-LN3-050	50
DA1-34046FB-B55C	52	DX-LN3-050	50	DX-LN3-080	80
DA1-34061FB-B55C[1)]	66	DX-LN3-060	60	DX-LN3-080	80
DA1-34072FB-B55C[1)]	77	DX-LN3-080	80	DX-LN3-080	80
DA1-34090FB-B55C[1)]	103	DX-LN3-100	100	DX-LN3-120	120
DA1-34110FB-B55C[1)]	126	DX-LN3-120	120	DX-LN3-160	160
DA1-34150FB-B55C[1)]	165	DX-LN3-160	160	DX-LN3-200	200
DA1-34180FB-B55C[1)]	192	DX-LN3-200	200	DX-LN3-200	200
DA1-34202FB-B55C[1)]	211	DX-LN3-250	250	DX-LN3-250	250
DA1-34240FB-B55C[1)]	241	DX-LN3-250	250	DX-LN3-300	300
DA1-34302FB-B55C[1)]	299	DX-LN3-300	300	DX-LN3-370	370
DA1-34370FB-B20C[2)]	377	DX-LN3-370	370	DX-LN3-450	450
DA1-34450FB-B20C[2)]	459	DX-LN3-450	450	Please enquire	N/A

1) DA1 variable frequency drive with DC link choke
2) If it is not guaranteed that the system percentage impedance is greater than or equal to 1%, a mains choke must be connected. Your u_K value should fall between 1 and 4%.

Table 41: Assigned mains chokes – DA1 voltage class 500 V (three-phase)

Device Type	Input current	Mains choke U_{LN} max. 500 V +10%, 50/60 Hz ±10 %			
	I_{LN}	max. 40 °C		max. 50 °C	
	A	Type	A	Type	A
Mains voltage: 500 V Supply voltage (50/60 Hz) U_{LN} 500 (-10%) - 600 (+10 %) V U_e 500 V AC, three-phase / U_2 500 V AC, three-phase					
DA1-352D1NB-…	3.5	DX-LN3-006	6	DX-LN3-006	6
DA1-353D1NB-…	4.5	DX-LN3-006	6	DX-LN3-006	6
DA1-354D1NB-…	5	DX-LN3-006	6	DX-LN3-006	6
DA1-356D5NB-…	9	DX-LN3-010	10	DX-LN3-010	10
DA1-359D0NB-…	12	DX-LN3-016	16	DX-LN3-016	16
DA1-35012NB-…	15	DX-LN3-016	16	DX-LN3-016	16
DA1-35017NB-…	21	DX-LN3-025	25	DX-LN3-025	25
DA1-35022NB-…	26	DX-LN3-025	25	DX-LN3-040	40
DA1-35028NB-B55C	33	DX-LN3-040	40	DX-LN3-040	40
DA1-35034NB-B55C	40	DX-LN3-040	40	DX-LN3-050	50
DA1-35043NB-B55C[1)]	49	DX-LN3-050	50	DX-LN3-050	50
DA1-35054NB-B55C[1)]	60	DX-LN3-060	60	DX-LN3-080	80
DA1-35065NB-B55C[1)]	71	DX-LN3-080	80	DX-LN3-080	80
DA1-35078NB-B55C[1)]	91	DX-LN3-100	100	DX-LN3-100	100
DA1-35105NB-B55C[1)]	121	DX-LN3-120	120	DX-LN3-160	160
DA1-35130NB-B55C[1)]	143	DX-LN3-160	160	DX-LN3-160	160
DA1-35150NB-B55C[1)]	158	DX-LN3-160	160	DX-LN3-200	200

1) DA1 variable frequency drive with DC link choke

→ Please enquire for mains chokes for mains voltages > 500 V.

→ For more information and technical data on DX-LN… mains chokes, please refer to instruction leaflet IL00906003Z.

6.8 Radio interference suppression filter

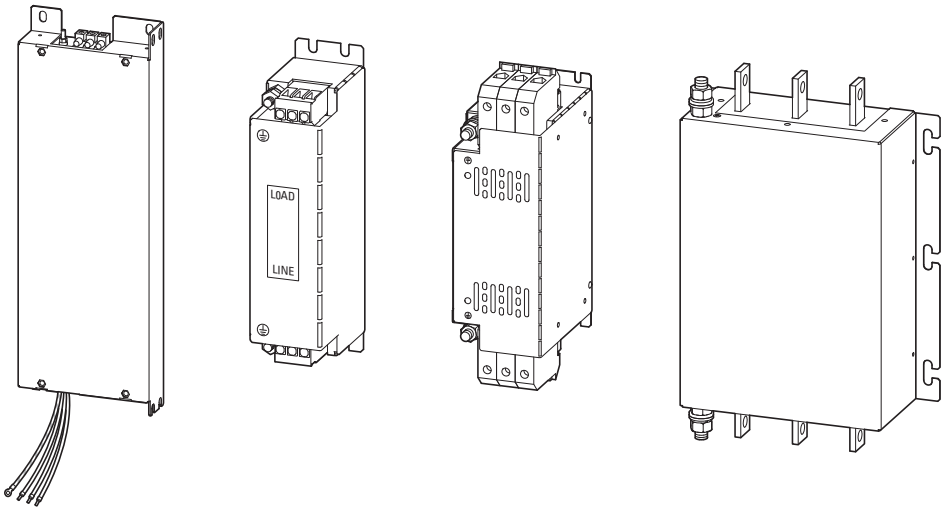

Figure 104:DX-EMC…-FS… (base-mounted filters with prefabricated connection cables) and DX-EMC… (side-mounting filters) external radio interference suppression filters

DX-EMC… external radio interference suppression filters should always be installed in the immediate proximity of the corresponding variable frequency drive. The connection cables between the radio interference suppression filter and the variable frequency drive should not be longer than 300 to 500 mm if they are installed without screening.

→ The DX-EMC… radio interference suppression filters with an IP20 degree of protection listed below are intended for installation in a control panel.

→ Sizes DX-EMC34-400… and DX-EMC34-750… have a degree of protection of IP00.

→ Please enquire for higher degrees of protection.

→ For more information and technical data on DX-EMC… radio interference suppression filters, please refer to instructional leaflets IL04012017Z and IL04012018Z.

→ The maximum motor cable lengths for the C1, C2, and C3 interference categories listed below are standardized recommended values. They apply to the adjustable switching frequencies (f_{PWM}) of 4 to 16 kHz (parameter P2-24) in the corresponding ratings.

Voltage class: 230 V

Mains voltage (50/60 Hz) ULN 200 (-10%) - 240 (+10 %) V

U_e 230 V AC, single-phase / U_2 230 V AC, three-phase

Table 42: Assigned radio interference suppression filter (single-phase)

Device Type	Frame size	Input current	Radio interference suppression filter U_{LN}: max. 250 V +0 %, 50/60 Hz ±10 %, maximum ambient air temperature: 50 °C					
			Type	Ampere rating	Leakage current (IEC38 +10 %)	max. motor cable length		
						C1	C2	C3
		I_{LN}		I_e	I_{PE}	l	l	l
		A		A	A	m	m	m
DA1-124D3FB-A20C	FS2	9	DX-EMC12-014-FS2	14	8	25	50	75
DA1-127D0FB-A20C	FS2	13	DX-EMC12-014-FS2	14	8	25	50	75
DA1-12011FB-A20C	FS2	19	DX-EMC12-025-FS2	25	8	25	75	100

→ DX-EMC…-**FS2**: base-mounted filter for frame size FS2

Voltage class: 230 V

Mains voltage (50/60 Hz) U_{LN} 200 (-10%) - 240 (+10 %) V

U_e 230 V AC, three-phase / U_2 230 V AC, three-phase

Table 43: Assigned radio interference suppression filter (three-phase)

Device Type	Frame size	Input current	Radio interference suppression filter U_{LN}: max. 520 V +0 %, 50/60 Hz ±10 %, maximum ambient air temperature: 50 °C					
			Type	Ampere rating	Leakage current (IEC38 +10 %)	max. motor cable length		
						C1	C2	C3
		I_{LN}		I_e	I_{PE}	l	l	l
		A		A	A	m	m	m
DA1-324D3FB-A20C	FS2	6	DX-EMC34-008	8	21	25	50	75
			DX-EMC34-008-L	8	6	5	25	50
			DX-EMC34-011-FS2	16	21	25	50	75
			DX-EMC34-011-FS2-L	16	6	5	25	50
DA1-327D0FB-A20C	FS2	11	DX-EMC34-016	16	21	25	50	75
			DX-EMC34-016-L	16	6	5	25	50
			DX-EMC34-011-FS2	11	21	25	50	75
			DX-EMC34-011-FS2-L	11	6	5	25	50
DA1-32011FB-A20C	FS2	13	DX-EMC34-016	16	21	25	75	100
			DX-EMC34-016-L	16	6	15	25	30
			DX-EMC34-025-FS3[2)]	25	21	25	50	75
			DX-EMC34-025-FS3-L[2)]	25	6	5	25	50
DA1-32018FB-A20C	FS3	21	DX-EMC34-030	30	29	25	50	75
			DX-EMC34-030-L	30	6.5	25	25	50
			DX-EMC34-025-FS3	25	21	25	50	75
			DX-EMC34-025-FS3-L	25	6	25	25	50
DA1-32024FB-A20C	FS3	26	DX-EMC34-030	30	29	25	100	125
			DX-EMC34-030-L	30	6.5	25	35	50
			DX-EMC34-031-FS4[2)]	31	21	25	50	75
			DX-EMC34-031-FS4-L[2)]	31	6	25	25	50
DA1-32024FB-B55C	FS4	27	DX-EMC34-030	30	29	25	50	75
			DX-EMC34-030-L	30	6.5	25	50	75
			DX-EMC34-031-FS4	31	20	25	50	75
			DX-EMC34-031-FS4-L	31	6	25	50	75
DA1-32046FB-B55C	FS4	50	DX-EMC34-055	55	30	25	100	125
			DX-EMC34-055-L	55	6.5	25	35	50
			DX-EMC34-075-FS5[2)]	75	20	25	50	75
			DX-EMC34-075-FS5-L[2)]	75	6	25	25	50

Device Type	Frame size	Input current	Radio interference suppression filter U_{LN}: max. 520 V +0 %, 50/60 Hz ±10 %, maximum ambient air temperature: 50 °C					
			Type	Ampere rating	Leakage current (IEC38 +10 %)	max. motor cable length		
						C1	C2	C3
		I_{LN}		I_e	I_{PE}	l	l	l
		A		A	A	m	m	m
DA1-32061FB-B55C[1]	FS5	64	DX-EMC34-075	75	22	25	50	75
			DX-EMC34-075-L	75	6.5	25	50	75
			DX-EMC34-075-FS5	75	22	25	50	75
			DX-EMC34-075-FS5-L	75	6.5	25	50	75
DA1-32072FB-B55C[1]	FS5	74	DX-EMC34-075	75	22	50	50	75
			DX-EMC34-075-L	75	6.5	20	50	75
			DX-EMC34-075-FS5	75	22	25	50	75
			DX-EMC34-075-FS5-L	75	6.5	5	25	50
DA1-32110FB-B55C[1]	FS6	121	DX-EMC34-130	130	22	25	50	75
			DX-EMC34-130-L	130	6.5	5	25	50
DA1-32150FB-B55C[1]	FS6	160	DX-EMC34-180	180	31	25	50	75
			DX-EMC34-180-L	180	6.5	5	25	50
DA1-32180FB-B55C[1]	FS6	188	DX-EMC34-180	180	31	25	50	75
			DX-EMC34-180-L	180	7	5	25	50
DA1-32202FB-B55C[1]	FS7	207	DX-EMC34-250	250	37	25	50	75
			DX-EMC34-250-L	250	7	5	25	50
DA1-32248FB-B55C[1]	FS7	246	DX-EMC34-250	250	37	25	50	75
			DX-EMC34-250-L	250	7	5	25	50

1) DA1 variable frequency drive with DC link choke
2) Side-mounting configuration only

→ DX-EMC…-**FS**: Base-mounted filter for the specified frame size
DX-EMC…-**L**: Low leakage current

Voltage class: 400 V

Mains voltage (50/60 Hz) U_{LN} 380 (-10%) - 480 (+10 %) V

U_e 400 V AC, three-phase / U_2 400 V AC, three-phase

Table 44: Assigned radio interference suppression filter (three-phase)

Device Type	Frame size	Input current	Radio interference suppression filter U_{LN}: max. 520 V +0%, 50/60 Hz ±10 %, maximum ambient air temperature: 50 °C					
				Ampere rating	Leakage current (IEC38 +10 %)	max. motor cable length		
						C1	C2	C3
		I_{LN}		I_e	I_{PE}	l	l	l
		A		A	A	m	m	m
DA1-342D2FB-A20C	FS2	3.5	DX-EMC34-008	8	21	25	50	75
			DX-EMC34-008-L	8	6	5	25	50
			DX-EMC34-011-FS2	11	21	25	50	75
			DX-EMC34-011-FS2-L	11	6	5	25	50
DA1-344D1FB-A20C	FS2	6	DX-EMC34-008	8	21	25	50	75
			DX-EMC34-008-L	8	6	5	25	50
			DX-EMC34-011-FS2	16	21	25	50	75
			DX-EMC34-011-FS2-L	16	6	5	25	50
DA1-349D5FB-A20C	FS2	12	DX-EMC34-008	8	21	25	50	75
			DX-EMC34-008-L	8	6	5	25	50
			DX-EMC34-011-FS2	16	21	25	50	75
			DX-EMC34-011-FS2-L	16	6	25	25	50
DA1-34018FB-A20C	FS3	22	DX-EMC34-030	30	29	25	50	75
			DX-EMC34-030-L	30	6.5	25	25	50
			DX-EMC34-025-FS3	25	21	25	50	75
			DX-EMC34-025-FS3-L	25	6	25	25	50
DA1-34024FB-A20C	FS3	28	DX-EMC34-030	30	29	25	50	75
			DX-EMC34-030-L	30	6.5	25	25	50
			DX-EMC34-031-FS4 [2)]	31	20	25	50	75
			DX-EMC34-031-FS4-L [2)]	31	6	25	25	50
DA1-34024FB-B55C	FS4	28	DX-EMC34-030	30	29	25	50	75
			DX-EMC34-030-L	30	6.5	25	25	50
			DX-EMC34-031-FS4	31	20	25	50	75
			DX-EMC34-031-FS4-L	31	6	25	25	50
DA1-34030FB-B55C	FS4	34	DX-EMC34-042	42	29	25	50	75
			DX-EMC34-042-L	42	6.5	25	50	75
			DX-EMC34-048-FS4	48	20	25	50	75
			DX-EMC34-048-FS4-L	48	6	25	50	75

Device Type	Frame size	Input current	Radio interference suppression filter U_{LN}: max. 520 V +0%, 50/60 Hz ±10 %, maximum ambient air temperature: 50 °C					
				Ampere rating	Leakage current (IEC38 +10 %)	max. motor cable length		
						C1	C2	C3
		I_{LN}		I_e	I_{PE}	l	l	l
		A		A	A	m	m	m
DA1-34039FB-B55C	FS4	44	DX-EMC34-055	55	30	25	50	75
			DX-EMC34-055-L	55	6.5	25	50	75
			DX-EMC34-048-FS4	48	20	25	50	75
			DX-EMC34-048-FS4-L	48	6	25	50	75
DA1-34046FB-B55C	FS4	52	DX-EMC34-055	55	30	25	50	75
			DX-EMC34-055-L	55	6.5	25	50	75
			DX-EMC34-075-FS5 2)	75	20	25	50	75
			DX-EMC34-075-FS5-L 2)	75	6	25	50	75
DA1-34072FB-B55C1)	FS5	77	DX-EMC34-100	100	30	25	50	75
			DX-EMC34-100-L	100	6.5	25	50	75
DA1-34090FB-B55C1)	FS6	103	DX-EMC34-130	130	22	25	50	75
			DX-EMC34-130-L	130	6.5	25	50	75
DA1-34110FB-B55C1)	FS6	126	DX-EMC34-130	130	22	25	50	75
			DX-EMC34-130-L	130	6.5	25	50	75
DA1-34150FB-B55C1)	FS6	165	DX-EMC34-180	180	31	25	50	75
			DX-EMC34-180-L	180	6.5	25	50	75
DA1-34180FB-B55C1)	FS6	192	DX-EMC34-250	250	37	25	50	75
			DX-EMC34-250-L	250	7	25	50	75
DA1-34202FB-B55C1)	FS7	211	DX-EMC34-250	250	37	25	50	75
			DX-EMC34-250-L	250	7	25	50	75
DA1-34240FB-B55C1)	FS7	241	DX-EMC34-250	250	37	25	50	75
			DX-EMC34-250-L	250	7	25	50	75
DA1-34302FB-B55C1)	FS7	299	DX-EMC34-400	400	60	25	50	75
			DX-EMC34-400-L	400	8	25	50	75
DA1-34370FB-B20C2)	FS8	377	DX-EMC34-400	400	60	25	50	75
			DX-EMC34-400-L	400	8	5	25	50
DA1-34450FB-B20C2)	FS8	459	DX-EMC34-750	750	60	25	50	75
			DX-EMC34-750-L	750	8	5	25	50

1) DA1 variable frequency drive with DC link choke
2) Side-mounting configuration only
3) If it is not guaranteed that the system percentage impedance is greater than or equal to 1%, a mains choke must be connected. Your u_K value should fall between 1 and 4 %.

→ DX-EMC…-**FS**: Base-mounted filter for the specified frame size
DX-EMC…-**L**: Low leakage current

6.9 Braking resistances

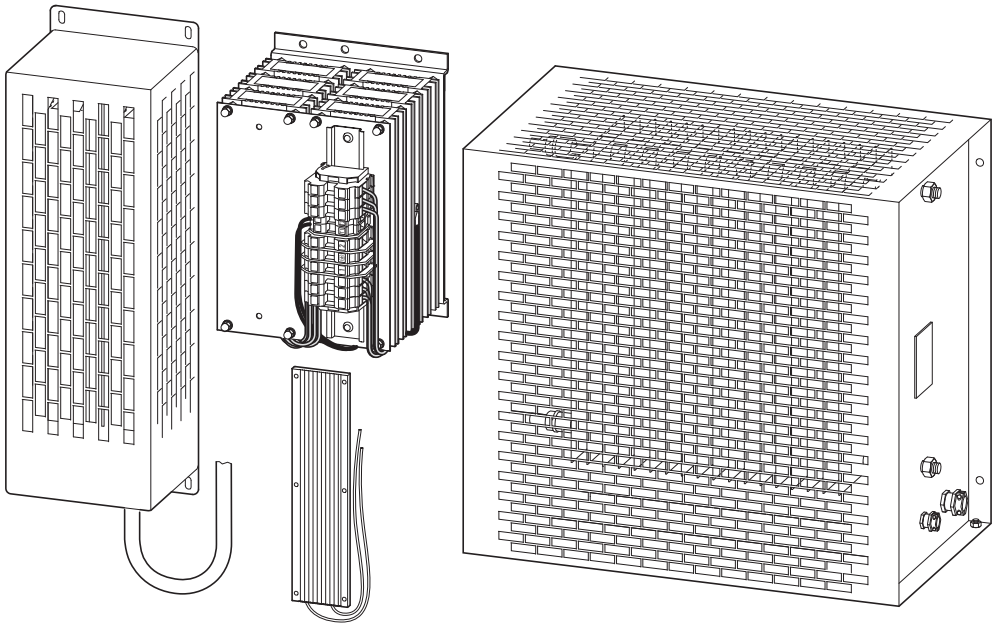

Figure 105:Examples of DX-BR… brake resistor designs

NOTICE

The specified minimum resistance R_{Bmin} must not be fallen below.

CAUTION

Brake resistors get extremely hot during operation!

The following tables provide examples of DX-BR… brake resistors rated for individual DA1 variable frequency drives. They are specified based on the "high duty" and "low duty" classification for intermittent braking with a cycle time t_C of 120 seconds and a pulse power P_{Peak} equal to maximum braking power P_{max} of the variable frequency drive with the rated motor output.

Load groups (simplified classification)

- **Low duty**: Low load with short braking duration and low duty factor (up to about 25 %), e.g., for horizontal conveyors and handling equipment for bulk cargo and general cargo, end carriages, sliding doors, and turbomachinery (centrifugal pumps, fans).
- **High duty**: High load with long braking duration and high duty factor (at least 30 %), e.g., for elevators, downhill conveyors, winders, centrifuges, flywheel motors, and large fans.

All brake resistors feature a temperature switch for protection against thermal overload.

This dry contact (N/C) can be directly integrated into the DA1 variable frequency drive's control section and work as an external fault message (control terminal 10, DI5, parameter P9-08 = 5).

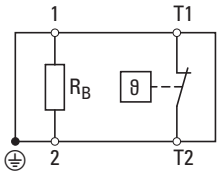

Exception:

Resistors DX-BR3-100 and DX-BR5-33 do not feature a circuit-breaker. They are inserted into the corresponding recesses on the DA1 variable frequency drive's heat sinks (frame sizes FS2 to FS5) and are automatically protected against thermal overloads as a result (heat sink overtemperature, display: 0-tF).

For more information and technical data on the DX-BR… brake resistors listed here, please refer to the corresponding instruction leaflet for the individual designs: IL04012024Z, IL04011ZU, IL04014ZU, IL04015ZU, and IL04021ZU.

Table 45: Braking resistance – DA1 voltage class 230 V

Device Type	Frame size	Resistance value			Braking resistance (Low duty)					Braking resistance (High duty)				
					Type					Type				
		R_{Bmin}	R_{Brec}	P_{max}		R_B	P_{DB}	DF	t_{Brems}		R_B	P_{DB}	DF	t_{Brems}
		Ω	Ω	kW		Ω	kW	%	s		Ω	kW	%	s
Mains voltage: 230 V | supply voltage (50/60 Hz) U_{LN} 200 (-10 %) - 240 (+10 %) V | U_e 230 V AC, single-phase / U_2 230 V AC, three-phase														
DA1-124D3FB-A20C	FS2	25	100	0.75	DX-BR3-100	100	0.2	27	32	DX-BR100-240	100	0.24	32	38
DA1-127D0FB-A20C	FS2	25	50	1.5	DX-BR3-100	100	0.2	13	16	DX-BR050-600	50	0.6	40	48
DA1-12011FB-A20C	FS2	25	35	2.2	DX-BR3-100	100	0.2	9	11	DX-BR042-720	42	0.72	33	39
Mains voltage: 230 V | supply voltage (50/60 Hz) U_{LN} 200 (-10 %) - 240 (+10 %) V | U_e 230 V AC, three-phase / U_2 230 V AC, three-phase														
DA1-324D3FB-A20C	FS2	25	100	0.75	DX-BR3-100	100	0.2	27	32	DX-BR100-240	100	0.24	32	38
DA1-327D0FB-A20C	FS2	25	50	1.5	DX-BR3-100	100	0.2	13	16	DX-BR050-600	50	0.6	40	48
DA1-32011FB-A20C	FS2	25	35	2.2	DX-BR3-100	100	0.2	9	11	DX-BR042-720	42	0.72	33	39
DA1-32018FB-A20C	FS3	20	20	4	DX-BR5-33	33	0.5	13	15	DX-BR025-1440	25	1.44	36	43
DA1-32024FB-A20C	FS3	20	20	5.5	DX-BR5-33	33	0.5	9	11	DX-BR025-1920	25	1.92	35	42
DA1-32024FB-B55C	FS4	12	20	5.5	DX-BR5-33	33	0.5	9	11	DX-BR025-1920	25	1.92	35	42
DA1-32030FB-B55C	FS4	12	22	7.5	DX-025-1440	25	1.44	19	23	DX-027-2880	27	2.88	38	46
DA1-32046FB-B55C	FS4	12	22	11	DX-025-1440	25	1.44	13	16	DX-BR022-5K1	22	5.1	46	56
DA1-32061FB-B55C	FS5	6	12	15	2 // DX-025-1440	12.5	2.88	19	23	DX-BR012-5K1	12	5.1	34	41
DA1-32072FB-B55C	FS5	6	12	18.5	2 // DX-025-1440	12.5	2.88	16	19	DX-BR012-9K2	12	9.2	50	60
DA1-32090FB-B55C	FS6	6	6	22	2 // DX-BR025-1440	12.5	2.88	13	16	DX-BR012-9K2	12	9.2	42	50
DA1-32110FB-B55C	FS6	3	6	30	2 // DX-BR025-1440	12.5	2.88	10	12	DX-BR012-9K2	12	9.2	31	37
DA1-32150FB-B55C	FS6	3	6	37	DX-BR006-5K1	6	5.1	14	17	DX-BR006-18K1	6	18.1	49	59
DA1-32180FB-B55C	FS6	3	6	45	DX-BR006-5K1	6	5.1	11	14	DX-BR006-18K1	6	18.1	40	48
DA1-32202FB-B55C	FS7	3	6	55	DX-BR006-5K1	6	5.1	9	11	DX-BR006-18K1	6	18.1	33	39
DA1-32248FB-B55C	FS7	3	6	75	DX-BR006-9K2	6	9.2	12	15	DX-BR006-33K	6	33	44	53

2 // DX-BR… = Two units of this model connected in parallel | 2 & DX-BR… = Two units of this model connected in series
2 // 2 & DX-BR… = Four units of this model, two and two connected in parallel, and the resulting two parallel links connected in series with each other
Resistances: R_{Bmin} = Minimum permissible resistance; R_{Brec} = Recommended resistance
P_{max} = Rated power for the low duty and high duty classification

Table 46: Braking resistance – DA1 voltage class 400 V

Device Type	Frame size	Resistance value			Braking resistance (Low duty)					Braking resistance (High duty)				
					Type					Type				
		R_{Bmin}	R_{Brec}	P_{max}		R_B	P_{DB}	DF	t_{Brems}		R_B	P_{DB}	DF	t_{Brems}
		Ω	Ω	kW		Ω	kW	%	s		Ω	kW	%	s
Mains voltage: 400 V | supply voltage (50/60 Hz) U_{LN} 380 (-10 %) - 480 (+10 %) V | U_e 400 V AC, three-phase / U_2 400 V AC, three-phase														
DA1-342D2FB-A20C	FS2	50	400	0.75	DX-BR3-100	100	0.2	27	32	DX-BR400-400	400	0.4	53	64
DA1-344D1FB-A20C	FS2	50	200	1.5	DX-BR3-100	100	0.2	13	16	DX-BR216-600	216	0.6	40	48
DA1-345D8FB-A20C	FS2	50	150	2.2	DX-BR3-100	100	0.2	9	11	DX-BR150-0K8	150	0.8	36	44
DA1-349D5FB-A20C	FS2	50	100	4	DX-BR100-600	100	0.6	15	18	2 & DX-BR050-920	100	1.92	48	58
DA1-34014FB-A20C	FS3	40	75	5.5	DX-BR100-600	100	0.6	11	13	2 & DX-BR050-920	100	1.92	35	42
DA1-34018FB-A20C	FS3	40	50	7.5	DX-BR050-720	50	0.72	10	12	DX-BR050-2880	50	2.88	38	46
DA1-34024FB-A20C	FS3	40	40	11	DX-BR050-920	50	0.92	9	10	DX-BR047-5K1	47	5.1	46	56
DA1-34024FB-B55C	FS4	22	40	11	DX-BR050-920	50	0.96	9	10	DX-BR047-5K1	47	5.1	46	56
DA1-34030FB-B55C	FS4	22	22	15	DX-BR025-1440	25	1.44	10	12	DX-BR022-5K1	22	5.1	34	41
DA1-34039FB-B55C	FS4	22	22	18.5	DX-BR025-1920	25	1.92	10	12	DX-BR022-9K2	22	9.2	50	60
DA1-34046FB-B55C	FS4	22	22	22	DX-BR025-1920	25	1.92	9	10	DX-BR022-9K2	22	9.2	42	50
DA1-34061FB-B55C	FS5	12	12	30	2 // DX-BR025-1440	12.5	2.88	10	12	DX-BR012-9K2	12	9.2	31	37
DA1-34072FB-B55C	FS5	12	12	37	2 // DX-BR027-1920	12.5	3.84	10	12	DX-BR012-18K1	12	18.1	49	59
DA1-34090FB-B55C	FS6	6	6	45	DX-BR006-5K1	6	5.1	11	14	DX-BR006-18K1	6	18.1	40	48
DA1-34110FB-B55C	FS6	6	6	55	DX-BR006-9K2	6	9.2	17	20	DX-BR006-18K1	6	18.1	33	39
DA1-34150FB-B55C	FS6	6	6	75	DX-BR006-9K2	6	9.2	12	15	DX-BR006-33K3	6	33.3	44	53
DA1-34180FB-B55C	FS6	6	6	90	DX-BR006-9K2	6	9.2	10	12	DX-BR006-33K3	6	33.3	37	44
DA1-34202FB-B55C	FS7	6	6	110	DX-BR006-18K1	6	18.1	16	20	DX-BR012-18K1	6	36.2	33	39
DA1-34240FB-B55C	FS7	6	6	132	DX-BR006-18K1	6	18.1	14	16	4 // DX-BR006-18K1	6	72.4	55	66
DA1-34302FB-B55C	FS7	6	6	160	DX-BR006-18K1	6	18.1	11	14	4 // DX-BR006-18K1	6	72.4	45	54

Device Type	Frame size	Resistance value			Braking resistance (Low duty)					Braking resistance (High duty)				
					Type					Type				
		R_{Bmin}	R_{Brec}	P_{max}		R_B	P_{DB}	DF	t_{Brems}		R_B	P_{DB}	DF	t_{Brems}
		Ω	Ω	kW		Ω	kW	%	s		Ω	kW	%	s
DA1-34370FB-B20C	FS8	2	2	200	DX-BR006-33K3	6	33.3	17	20	DX-BR002-102K4	2	102.4	51	61
DA1-34450FB-B20C	FS8	2	2	250	DX-BR006-33K3	6	33.3	13	16	DX-BR002-102K4	2	102.4	41	49

2 // DX-BR… = Two units of this model connected in parallel | 2 & DX-BR… = Two units of this model connected in series
2 // 2 & DX-BR… = Four units of this model, two and two connected in parallel, and the resulting two parallel links connected in series with each other
Resistances: R_{Bmin} = Minimum permissible resistance; R_{Brec} = Recommended resistance
P_{max} = Rated power for the low duty and high duty classification

Table 47: Braking resistance – DA1 voltage class 575 V

Device Type	Frame size	Resistance value			Braking resistance (Low duty)					Braking resistance (High duty)				
					Type					Type				
		R_{Bmin}	R_{Brec}	P_{max}		R_B	P_{DB}	DF	t_{Brems}		R_B	P_{RD}	DF	t_{Brems}
		Ω	Ω	kW		Ω	kW	%	s		Ω	kW	%	s
Mains voltage: 575 V | supply voltage (50/60 Hz) U_{LN} 500 (-10 %) - 600 (+10 %) V | U_e 575 V AC, three-phase / U_2 575 V AC, three-phase														
DA1-352D1NB-A20C	FS2	600	600	0.75	2 & DX-BR430-100	860	0.2	27	32	3 & DX-BR210-200	630	0.6	80	96
DA1-353D1NB-A20C	FS2	300	300	1.5	DX-BR400-0K4	400	0.4	27	32	2 & DX-BR150-0K5	300	1	67	80
DA1-354D1NB-A20C	FS2	200	200	2.2	DX-BR200-0K4	200	0.4	18	22	2 & DX-BR100-600	200	1.2	55	65
DA1-356D5NB-A20C	FS2	150	150	4	DX-BR150-0K5	150	0.5	13	15	2 & DX-BR075-1K1	150	2.2	55	66
DA1-359D0NB-A20C	FS2	100	100	5.5	DX-BR100-0K8	100	0.8	15	17	2 & DX-BR050-1440	100	2.88	52	63
DA1-35012NB-A20C	FS3	80	80	7.5	DX-BR100-920	100	0.96	13	15	2 & DX-BR050-1440	100	2.88	38	46
DA1-35017NB-A20C	FS3	50	50	11	DX-BR050-1440	50	1.44	13	16	2 & DX-BR025-1920	50	3.84	35	42
DA1-35022NB-A20C	FS3	33	33	15	DX-BR050-1440	50	1.44	10	12	DX-BR040-5K1	40	5.1	34	41
DA1-35022NB-B55C	FS4	33	33	15	DX-BR050-1440	50	1.44	10	12	DX-BR040-5K1	40	5.1	34	41
DA1-35028NB-B55C	FS4	33	33	18.5	DX-BR040-3K1	40	3.1	17	20	DX-BR047-9K2	47	9.2	50	60
DA1-35034NB-B55C	FS4	22	22	22	DX-BR022-3K1	22	3.1	14	17	DX-BR022-9K2	22	9.2	42	50
DA1-35043NB-B55C	FS5	16	16	30	DX-BR022-5K1	22	5.1	17	20	DX-BR022-9K2	22	9.2	31	37
DA1-35054NB-B55C	FS5	16	16	37	DX-BR022-5K1	22	5.1	14	17	2 & DX-BR012-9K2	24	18.4	50	60
DA1-35065NB-B55C	FS5	12	12	45	DX-BR012-5K1	12	5.1	11	14	DX-BR012-18K1	12	18.1	40	48
DA1-35078NB-B55C	FS6	12	12	55	DX-BR012-5K1	12	5.1	9	11	DX-BR012-18K1	12	18.1	33	39
DA1-35105NB-B55C	FS6	8	8	75	DX-BR012-9K2	12	9.2	12	15	2 & DX-BR006-18K1	12	36.2	48	58
DA1-35130NB-B55C	FS6	8	8	90	DX-BR012-9K2	12	9.2	10	12	2 & DX-BR006-18K1	12	36.2	40	48
DA1-35150NB-B55C	FS6	8	8	110	DX-BR012-9K2	12	9.2	8	10	2 & DX-BR006-18K1	12	36.2	33	39

2 & DX-BR… Two units of this model connected in series
Resistances: R_{Bmin} = Minimum permissible resistance; R_{Brec} = Recommended resistance
P_{max} = Rated power for the low duty and high duty classification

6.10 Motor chokes

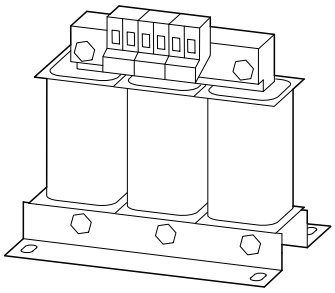

Figure 106:Motor choke DX-LM3…

Table 48: Motor chokes that should be used

Device Type			**Assigned motor choke**[1]	
				Ampere rating
DA1-12… DA1-32…	**DA1-34…**	**DA1-35…**[2]	**Type**	**A**
DA1-124D3…	DA1-342D2…	DA1-352D1…	DX-LM3-005	5
DA1-324D3…	DA1-344D1…	DA1-353D1…	DX-LM3-005	5
		DA1-354D1…	DX-LM3-005	5
DA1-127D0…	DA1-345D8…	DA1-356D5…	DX-LM3-008	8
DA1-327D0…			DX-LM3-008	8
DA1-12011…[3]	DA1-349D5…	DA1-359D0…	DX-LM3-011	11
DA1-32011…[3]			DX-LM3-011	11
	DA1-34014…	DA1-35012…	DX-LM3-016	16
DA1-32018..	DA1-34018…	DA1-35017…	DX-LM3-035	35
DA1-32024…	DA1-34024…	DA1-35022…	DX-LM3-035	35
DA1-32030…	DA1-34030…	DA1-35028…	DX-LM3-035	35
		DA1-35034…	DX-LM3-035	35
DA1-32046…	DA1-34039…	DA1-35043…	DX-LM3-050	50
	DA1-34046…		DX-LM3-050	50
DA1-32061…	DA1-34061…	DA1-35054…	DX-LM3-063	63
DA1-32072…	DA1-34072…	DA1-35065….	DX-LM3-080	80
		DA1-35078…	DX-LM3-080	80
DA1-32090…	DA1-34090…		DX-LM3-100	100
DA1-32110…	DA1-34110…	DA1-35105…	DX-LM3-150	150
DA1-32150…	DA1-34150…	DA1-35130…	DX-LM3-150	150
		DA1-35150…	DX-LM3-150	150
DA1-32180…	DA1-34180…		DX-LM3-180	180
DA1-32202…	DA1-34202…		DX-LM3-220	220
DA1-32248…	DA1-34240…		DX-LM3-260	260

Device Type			Assigned motor choke[1]	
				Ampere rating
DA1-12… DA1-32…	DA1-34…	DA1-35…[2]	Type	A
	DA1-34302…		DX-LM3-303	303
	DA1-34370…[4]		DX-LM3-370	370
	DA1-34450…[4]		DX-LM3-450	450

1) Maximum ambient temperature of 50 °C for the corresponding DA1 variable frequency drive with an IP20 degree of protection. For devices with an IP55 degree of protection: with a derating of 1.5 % per °C above 40 °C on rated operational current I_e of DA1 and DX-LM3…
2) DX-LM3… motor choke only for motor voltages (= mains voltages U_{LN}) of up to 500 V AC
3) Above 40 °C, use DX-LM3-016 motor choke
4) Above 40 °C, with a derating of 1.5 % on rated operational current I_e of DA1 and DX-LM3…



For more information and technical data on DX-LM3… motor chokes, please refer to instruction leaflet IL00906003Z.

6.11 Sine filter

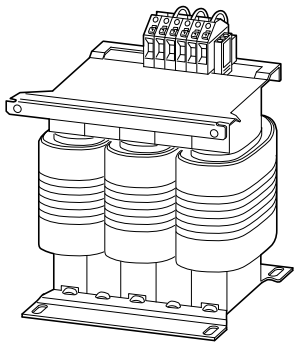

Figure 107:Sine filter DX-SIN3…

Sine filter DX-SIN3… should only be operated with fixed switching frequencies.
Accordingly, the switching frequency (P2-24) must be set to the value set in parameter P6-02 (auto temperature management) (P2-24 = P6-02).

Permissible switching frequencies for DA1 with DX-SIN3…:
1 ≙ 8 kHz; 2 ≙12 kHz

As a result of double modulation, the value set on the DA1 variable frequency drive will be twice the effective value on the sine filter (1 ≙ 8 kHz → 4 kHz; 2 ≙ 12 kHz → 6 kHz).

Table 49: Assigned sine filters (degree of protection IP00)

Device Type			Assigned sine filter[1], rated frequency f_2 = 0 - 150 Hz		
DA1-12… DA1-32…	DA1-34…	DA1-35…[2]	Type	Ampere rating A	Voltage drop u_K at 400 V %
DA1-124D3…	DA1-342D2…	DA1-352D1…	DX-SIN3-010	10	7
DA1-127D0…	DA1-344D1…	DA1-353D1…	DX-SIN3-010	10	7
DA1-12011…[3]	DA1-345D8…	DA1-354D1…	DX-SIN3-010	10	7
DA1-324D3…	DA1-349D5…	DA1-356D5…	DX-SIN3-010	10	7
DA1-327D0…		DA1-359D0…	DX-SIN3-010	10	7
DA1-32011…[3]			DX-SIN3-010	10	7
	DA1-34014…	DA1-35012…	DX-SIN3-016	16.5	7.5
DA1-32018..	DA1-34018…	DA1-35017…	DX-SIN3-023	23.5	8
		DA1-35022…	DX-SIN3-023	23.5	8
DA1-32024…	DA1-34024…	DA1-35028…	DX-SIN3-032	32	8.7
DA1-32030…	DA1-34030…	DA1-35028…	DX-SIN3-032	32	8.7
		DA1-35034…	DX-SIN3-037	37	8.6
DA1-32046…	DA1-34039…	DA1-35043…	DX-SIN3-048	48	7.8
	DA1-34046…		DX-SIN3-048	48	7.8
DA1-32061…	DA1-34061…	DA1-35054…	DX-SIN3-061	61	8.3
DA1-32072…	DA1-34072…	DA1-35065….	DX-SIN3-072	72	7.5
DA1-32090…	DA1-34090…	DA1-35078…	DX-SIN3-090	90	10
DA1-32110…	DA1-34110…	DA1-35105…	DX-SIN3-115	115	11
DA1-32150…	DA1-34150…	DA1-35130…	DX-SIN3-150	150	10.2
		DA1-35150…	DX-SIN3-150	150	10.2
DA1-32180…	DA1-34180…		DX-SIN3-180	180	7.5
DA1-32202…	DA1-34202…		DX-SIN3-250	250	7.5
DA1-32248…	DA1-34240…		DX-SIN3-250	250	7.5
	DA1-34302…		DX-SIN3-440	440	7.5
	DA1-34370…		DX-SIN3-440	440	7.5
	DA1-34450…		DX-SIN3-480	480	7

1) Maximum permissible ambient air temperature: + 50 °C; maximum permissible motor voltage U_{2max}: 520 V
2) Sine filter DX-SIN3… only for (= supply voltage U_{LN}) to 500 V AC
3) DA1-12011… and DA1-32011… for load currents (rated motor current) of up to 10 A



For more information and technical data on DX-SIN3… sine filters, please refer to instruction leaflet IL00906001Z.

6.12 All-pole sine filters



Please enquire for DX-SIN3-…-A all-pole sine filters for motor currents of up to 180 A.

All-pole sine filters make it possible to reduce differential-mode and common-mode interference at the variable frequency drive output when using extremely long motor cable lengths. This makes it possible to eliminate the bearing currents, caused by common-mode voltage, between the motor windings' neutral point and earth potential, extending the motor's lifespan.

DX-SIN3-…-A all-pole sine filters also require being connected to DC+ (or +) and DC- (or -) on the internal DC link in DA1 variable frequency drives.

They can be used

- For fixed switching frequencies ≧ 8 kHz (P2-24, double modulation)
- Output voltage U_{2max} to 500 V,
- Rotating field frequencies (f_2) of 0 to 60 Hz.

They make it possible to forego the use of screened motor cables.



DX-SIN3-…-A all-pole sine filters may only be operated with fixed switching frequencies.
Accordingly, the switching frequency (P2-24) must be set to the value set in parameter P6-02 (auto temperature management) (P2-24 = P6-02).

Permissible switching frequencies for DA1 with DX-SIN3…:
1 ≙ 8 kHz; 2 ≙12 kHz

As a result of double modulation, the value set on the DA1 variable frequency drive will be twice the effective value on the sine filter (1 ≙ 8 kHz → 4 kHz; 2 ≙ 12 kHz → 6 kHz).

Table 50: Rated all-pole sine filters (IP20 degree of protection)

Device Type		Assigned sine filter[1], rated frequency f_2 = 0 - 150 Hz		
	DA1-34…	Type	Ampere rating A	Voltage drop u_K at 400 V %
	DA1-342D2…	DX-SIN3-005-A	5	5
	DA1-344D1…	DX-SIN3-005-A	5	5
	DA1-345D8…	DX-SIN3-013-A	13	5
	DA1-349D5…	DX-SIN3-013-A	13	5
	DA1-34014…	DX-SIN3-024-A	24	5
	DA1-34018…	DX-SIN3-024-A	24	5
	DA1-34024…	DX-SIN3-024-A	24	5
	DA1-34030…	DX-SIN3-046-A	46	5
	DA1-34039…	DX-SIN3-046-A	46	5
	DA1-34046…	DX-SIN3-046-A	46	5
	DA1-34061…	DX-SIN3-062-A	62	5
	DA1-34072…	DX-SIN3-075-A	75	5
	DA1-34090…	DX-SIN3-150-A	150	5
	DA1-34110…	DX-SIN3-150-A	150	5
	DA1-34150…	DX-SIN3-150-A	150	5

1) Maximum permissible ambient temperature: + 45 °C;
Permissible motor voltage range: 380 - 480 V ±10%

7 Accessories

7.1 List of accessories

Type	Description	Document
DX-KEY-....	External keypad	AP040022
DXA-EXT-3 RO	Adds three relay outputs	IL040006ZU
DXA-EXT-3DI1RO	Adds three digital inputs and one relay output	IL040007ZU
DXA-EXT-ENCOD	Dual-channel encoder module for using closed-loop vector control	AP040028DE
DX-NET-SWD1	Interface card for connecting to a SmartWire-DT network	MN04012009Z
DX-COM-STICK	Parameter copying stick for establishing a Bluetooth connection to PC software	MN040003
DX-COM-PCKIT	Wired communication between DA1 and PC	MN040003
DX-CBL-PC1M5	Wired communication between DA1 and PC	MN040003
DX-SPL-R145-2SL1PL	RJ45, 8-pin, splitter, 2 sockets, 1 plug on short connection cable	IL04012023Z
DX-SPL-RJ45-3SL	RJ45, 8-pin, splitter, 3 sockets	IL04012023Z
DX-SPL-RJ45	RJ45, 8-pin, splitter, 2 sockets, 1 plug	IL 040026ZU
DX-SPL-RJ45-TERM	RJ45, 8-pin, splitter, 1 socket, 1 plug, integrated bus termination resistor for CANopen and Modbus	IL 040026ZU
DX-EMC-MNT...	EMC cable bracket. Can be used to route and secure cables in the connection area	IL040010ZU
drivesConnect	PC parameter configuration software for variable frequency drives, with integrated oscilloscope function, drive control function, and function block creation for DA1	MN040003

7 Accessories

7.1 List of accessories

Alphabetical index

A

Abbreviations 7
AC motors 58
AC supply systems 39, 40
accessories 195
After Sales Service 36
All-pole sine filter 192
Analog input 109
Analog Output 109

B

Baffle 75
Base-mounted filter 176
Blanking plate 25
Block diagrams 114
Braking resistances 182
Break-Down Service 36
Brushless DC motors 58
Bus termination resistor 112
Bypass 46

C

Cable brackets 88
Cable cross-sections 43, 161
Cable glands 101
cable routing 84
CANopen 112
Catalog number selection 16
Example 17
Checklist 129
Circuit type 55
commissioning 131
Connection 58, 91, 104
Connection terminals 97
Control panel installation 80
Control section 104
Control signal terminals 104, 105, 113
Cooling measures 73

D

DC link coupling 92
DC Link Voltage 49
Delta circuit 55
Delta network 39
Derating 32
derating 32
Description 23
Digital input 108
Digital output 110
Dimensions 157
Disconnecting device 42
Double modulation method 190
drivesConnect 111
DX-KEY-LED 134
DX-KEY-OLED 134

E

Earth-fault protection 85
Earthing 85
Efficiency classes 58
Electrical Installation 90
EMC 86
emc 83
EMC mounting adapter 78
Enclosure versions 10, 71
Engineering 37
Equipment supplied 13
ESD measures 104
External control voltage 111

F

Fault messages 137
Features 18
fixing 77
Fuses 42, 164

G

General installation diagram 89
gland plates 88
Ground contact currents 90

H

Hazard warnings
of material damages 6
of personal injury 6
Operational 130
Heat dissipation 76
Heat Losses 74, 76

I

Inching operation 45, 131
Inspection 35
Installation 71
Instructional leaflets 71
Insulation tests 126
Internal DC link capacitors 36
Internet addresses 7

L

Leakage currents 44, 83
LED status indication 134
Liquid fuses 164
List of revisions 5
Load groups 182

M

Magnet system 37
    Example 38
Main terminal 39
Mains chokes 172
Mains contactors 45, 168
Mains supply voltages 8
Mains voltage 40
Maintenance 35, 68
Minimum clearances 74
Modbus RTU 112
Motor cable 99
motor choke 188
Motor earthing 85
Motor Selection 54
Motor terminal box 99
Mounting 72
Mounting dimensions 78
Mounting position 71, 73
Mounting rail 78

N

Nameplate
    Example 14
Network configuration 39

O

Openings 98, 103
Operating unit 134

P

P.f. correction equipment 41
Paralleling link 31, 56
Parameter manual 5
PDS (Power Drives System) 37
Permanent magnet motors 58
Power part 91
Protection against electric shock 127
Protective devices 164
Protective earth 85

R

Radio interference suppression filter 176
Rated motor current 30
Rated operational data 14, 143, 147
Rated output current 30
Rating plate 14, 55
Reference voltage 133
relay 110
Residual Current Circuit Breakers 44
Residual Current Device 44
RJ45 112
RS485 112

S

Safe stop 68
Safe Torque Off 59
Screen braid 99
Screen earth kit 87
Screened cable 87
Screws 78
Selection Criteria 30
Series 147
Service 36
Setting parameters 136
Shielded motor cable 100
Side-mounting filter 176
Signal cables 84
Sine filter 53, 190
Sizes 157
Standards 60, 127
Star connection 55
STO function 59
STO terminals 106
STO-compatible installation 61
Storage 35
Storing Temperature 35
Stripping lengths 98
Supply data 105
Switching Frequency 53, 176

Synchronous reluctance motors 58
System overview 11

T
Technical data 143
terminal bolt 96
Terminal capacity 104
THD (Total Harmonic Distortion) 41
Three-phase motor 54, 55, 132
Tightening torques 78, 98

U
Unit of measurement 8
Use, intended 34

V
VAR 87
Voltage balance 40
Voltage categories 27

W
Warranty 36