User manual

Check synchroscope type CSQ-3

4189340263L (UK)

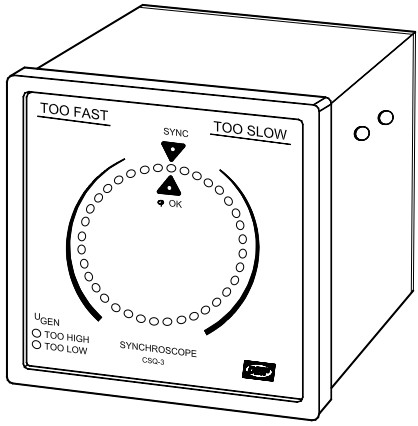

- *Multi function, precision LED synchronoscope*
- *Easy push-button programming of all set points*
- *Very high user safety*
- *High immunity to harmonic distortion*
- *Dead bus functionality*
- *Special version for marine applications*

DEIF A/S

DEIF A/S
Frisenborgvej 33, DK-7800 Skive
Denmark

Tel.: (+45) 9614 9614
Fax: (+45) 9614 9615
E-mail: deif@deif.com

List of contents

1. Warnings, legal information and notes to CE-marking and UL listing 3

2. Application and functionality summary 3

3. Operation of display, push-buttons and LEDs 6
3.1 LEDs 7
3.2 Settings 8

4. Terminal list 10
4.1 Overview of the terminals 10

5. Wiring diagrams 11
5.1 AC input connections 11
5.1.1 Connection diagram 11

6. Commissioning 12

7. Technical data 12

8. Dimensions 15

9. Order specifications 15

Example of an order specification for the CSQ-3 15

Appendix 1: Setting and parameters for synchronising 16

Settings 16

Guidelines for setting of the CSQ-3 18

Visual representation of the parameters 18

1. Warnings, legal information and notes to CE-marking and UL listing

This manual gives general guidelines on how to install and operate the CSQ-3. Installing and operating the CSQ-3 implies work with dangerous currents and voltages. Therefore this should only be done by qualified personnel. DEIF A/S takes no responsibility for operation or installation. If there is any doubt about how to install or operate the system on which the CSQ-3 is measuring, the company responsible for the installation or the operation must be contacted.

The CSQ-3 is CE-marked with respect to the EMC directive for residential, commercial and light industry plus industrial environment. This covers all environment types where the CSQ-3 can normally be used.

The CSQ-3 is CE-marked with respect to the low-voltage directive for up to 600V phase to ground voltage, installation category (overvoltage category) III and pollution degree 2.

The CSQ-3 can be delivered with UL listing. Please refer to the section “Technical data” for installation information as required by the UL.

The package contains the following items:

- Check synchroscope CSQ-3 unit
- User manual
- Two fixing clamps
- A plugable connection (mounted on the unit)
- Cable for system status output (only marine version)

2. Application and functionality summary

The CSQ-3 check synchroscope is a microprocessor-based synchronising unit providing measurement of all relevant values for synchronising a generator to a net (busbar). It is used in any kind of installation where manual or semi-automatic synchronising is required.

In the CSQ-3 there is a possibility of adjusting the following synchronising requirements: The voltage difference between GEN and BB, the size of the phase window and the length of the synchronising pulse.

In addition to that there is an indication of ‘U_{GEN} TOO HIGH’ or ‘U_{GEN} TOO LOW’ (red LEDs), phase difference within the preset window ‘φOK’ (yellow LED), and finally synchronising output active, ‘SYNC.’ (green LED).

Display/reading

The unit measures the two inputs voltages: Generator (GEN) and busbar (BB), respectively. The phase difference from GEN's zero-crossing to BB's zero-crossing is calculated by the processor and is shown on the LED circle, consisting of 36 red LEDs.

The red LEDs are only lit one at a time and its position indicates the phase difference between GEN and BB. The lit LED simulates the pointer tip of an analogue pointer instrument. If the LED is lit in the 12 o'clock position, the phase difference is 0 degrees. In the 6 o'clock position, 180 degrees etc. With 36 LEDs the resolution is 10 degrees.

The movement of the lit LED's position indicates the frequency difference between GEN and BB. If the indication is turning clockwise (too fast), the GEN frequency is too high in proportion to the BB frequency. If the indication is turning counter-clockwise, the proportion is inversed. The rate of the motion tells about the frequency difference. The faster the rotation, the bigger the frequency difference, e.g. 1 rotation per second = 1Hz. If the BB frequency is 50Hz and the rotation turns right, the GEN frequency will be 51Hz in this example.

If the frequency difference between GEN and BB is becoming too big (>3Hz), the circular motion stops and a LED will be lit at the 'too fast' or 'too slow' mark, dependent on which direction the GEN frequency has to be adjusted to.

Normal synchronising

The unit automatically calculates the synchronising parameters to check if there is the required space for the synchronising inside the preset phase window. These calculations compare the frequency difference with t_R and the size of the phase window. When t_R is set to ∞, t_d can be set by the user and is then included in the calculations instead of t_R.

If the $\Delta\varphi$ window is set symmetrically, both underfrequency synchronising and over-frequency synchronising is possible.

Under- or overfrequency synchronising

When the $\Delta\varphi$ window is set asymmetrically the following functionality is possible:

> If the $\Delta\varphi$ window is set asymmetrically with a higher positive than negative $\Delta\varphi$ value, only synchronising with the generator input at lower frequency than the busbar input is possible (underfrequency synchronising).
>
> If the $\Delta\varphi$ window is set asymmetrically with a lower positive than negative $\Delta\varphi$ value, only synchronising with the generator input at higher frequency than the busbar input is possible (overfrequency synchronising).

Note:
This function is not active with t_R set to ∞.

Dead bus synchronising
When the dead bus function is set, the synchronising relay will be activated and the green LED (SYNC) will be lit, when the busbar voltage is below the dead busbar preset level and the GEN voltage exceeds 80% of nominal value.

Please notice that when the voltage on the net has been restored, the CSQ-3 will remain in the dead bus function for a period of 5 seconds.

Power up reset
The unit will operate when the GEN voltage exceeds 80% of the nominal value. Below this level no functionality is obtained.

μP supervision output
Due to the demands from the classification societies (GL) a special optocoupler output has been added on the marine version.

From this output it is possible to supervise the internal microprocessor (μP).

If an error is present, the output changes state from a low to a high impedance (open collector output).

3. Operation of display, push-buttons and LEDs

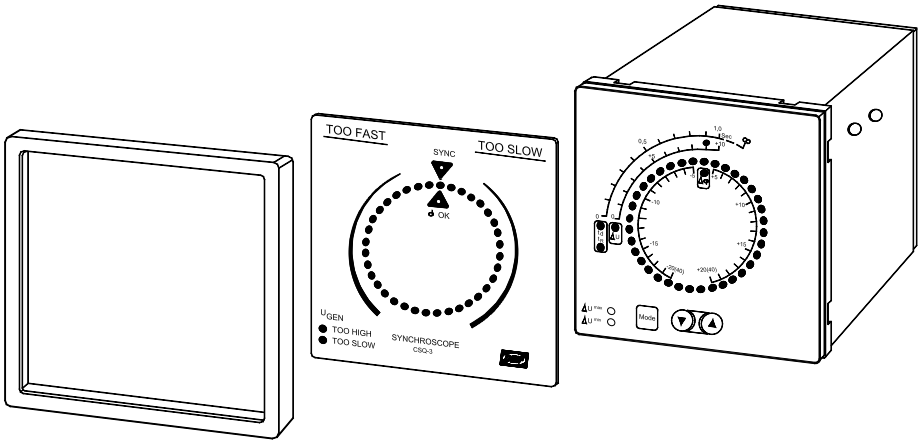

To get access to the settings, remove the front frame and the front foil.

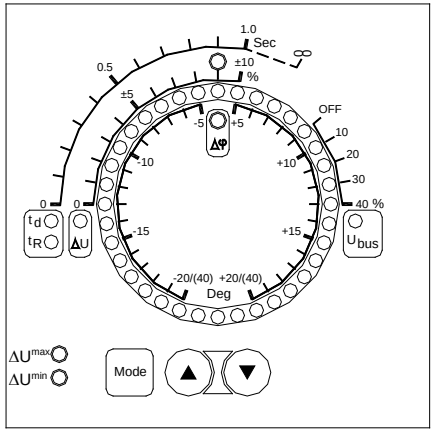

The CSQ-3 can be operated in two different modes: 'Normal mode' and 'setting mode'. Normal mode is used to display measuring values, and setting mode is used to view the settings or change them to the desired functionality.

3.1 LEDs

The CSQ-3 has the following LEDs on the fronts showing different operating information.

LEDs on primary front (normal mode):

LED	Colour	Function
Circle	Red	The lit LED in the circle shows the phase difference between GEN and BUSBAR
SYNC.	Green	All preset sync. parameters are OK, and the output relay is activated
φ OK	Yellow	The phase difference between GEN and BUSBAR is within the preset window
U_{GEN} TOO HIGH	Red	The voltage difference between GEN and BUSBAR is outside the preset range. U_{GEN} is too high
U_{GEN} TOO LOW	Red	The voltage difference between GEN and BUSBAR is outside the preset range. U_{GEN} is too low

LEDs on secondary front (setting mode):

LED	Colour	Function
Circle	Red	Parts of the circle are used as scales for the different settings
$\Delta\varphi$	Yellow	Shows that the $\Delta\varphi$ scale is active
t_d	Yellow	Shows that the t_d scale is active Please notice that t_d only becomes active with t_R set to ∞
t_R	Yellow	Shows that the t_R scale is active
ΔU	Yellow	Shows that the ΔU scale is active
U_{bus}	Yellow	Shows that the U_{bus} scale (dead bus) is active

For further information about the settings, please see appendix 1.

3.2 Settings

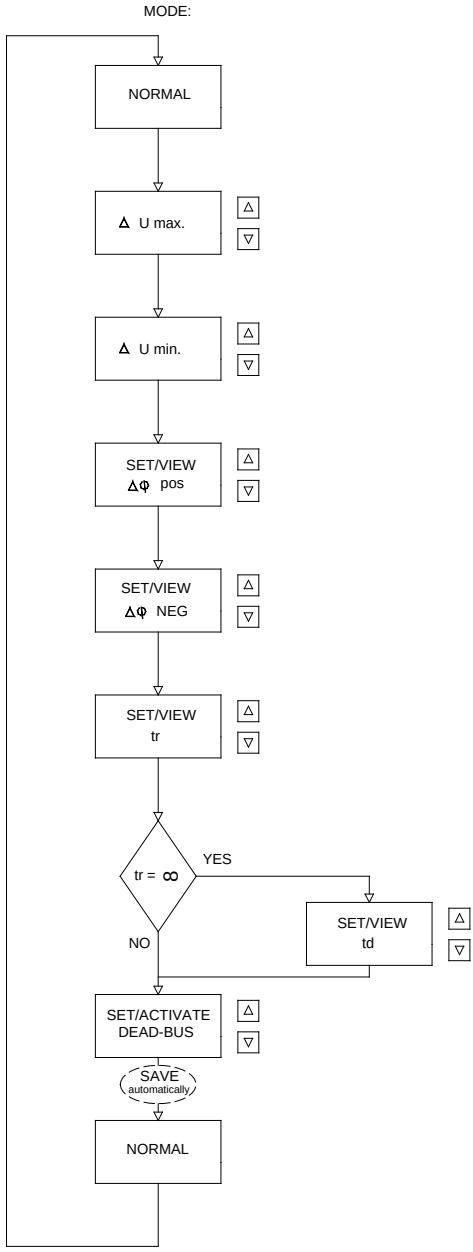
MODE:
NORMAL
Δ U max.
Δ U min.
SET/VIEW
ΔΦ pos
SET/VIEW
ΔΦ NEG
SET/VIEW
tr
tr = ∞
YES
NO
SET/VIEW
td
SET/ACTIVATE
DEAD-BUS
SAVE
automatically
NORMAL

Operation
The operation occurs via the secondary foil accessible when the primary foil/front frame is removed. The operation occurs by means of 3 push-buttons: Mode (toggle), up arrow (▲) and down arrow (▼).

Control of settings
The mode button is held down for about 2-3 seconds to obtain the setting mode. This is confirmed by the fact that the LED is lit at the ΔU scale and that the setting of the ΔU max. parameter can be read on the matching scale. With ▲ and ▼ the setting can be changed.

For every subsequent push on the mode button, a change to the next parameter occurs. These can be read and changed in a corresponding way. When mode is pushed after the last parameter, one returns to normal mode.

When leaving the last setting menu, the LED circle 'rotates' to indicate that the current setting has been automatically saved.

Please notice that the preset window, ΔU and Δφ, is divided into two separate settings, making asymmetrical setting of this parameter possible.

Also please notice that if the settings are changed unintentionally, these are saved when the setting mode is left.

Change of Δφ range
The normal range of Δφ is -20°...-5° and 5°...20° in 1° steps.

This can be changed to -40°...-10° and 10°...40° in 2° steps.

Step down to the 20° point with the down arrow button. While pressing the down arrow button, press the up arrow button and the scale will change from normal range to the scale 2 x normal range. Press the up arrow button to return to normal range. While pressing the up arrow button, press the down arrow button, and the scale will change from 2 x normal range to normal range. Please notice that the 2 x normal range mode is indicated on the LED circle by activation of 2 LEDs each time Δφ is changed.

Factory settings
When the product is delivered from the factory, the following basic settings will be set:

ΔU:	5% of $\pm U_{BB}$
t_R:	0.5 sec.
Δφ:	±10°
Dead bus:	OFF

Restorage of factory settings
Activate the two arrow buttons simultaneously. While doing this hold down the mode button for approximately 5 seconds. Then the LED circle will light up and rotate to indicate that the factory settings have been restored.

4. Terminal list

4.1 Overview of the terminals

Terminal no.	Signal symbol	Signal name
1	R (L1)	Busbar voltage
	x	Not used
2	S (L2)	Busbar voltage
	x	Not used
3	SYNC.	Relay output
4	SYNC.	Relay output
	x	Not used
5	R (L1)	Generator voltage
	x	Not used
6	S (L2)	Generator voltage

Only on marine version:

System status circuit off = failure	+ open collector
	- open collector

Rear view of the unit:

Land version

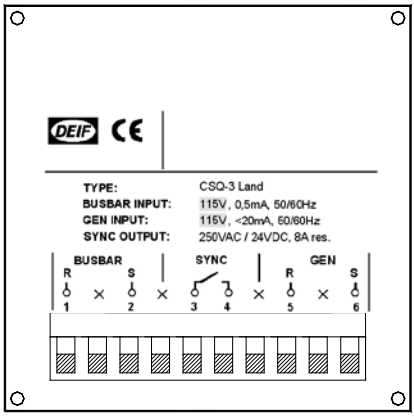

Marine version

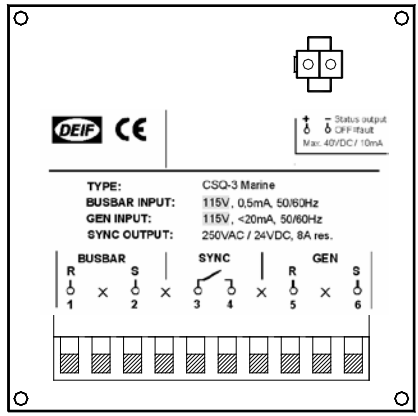

5. Wiring diagrams

5.1 AC input connections

When ordering the CSQ-3, the correct range of voltage inputs must be specified. They must be connected as shown below (unused terminals are not shown).

5.1.1 Connection diagram

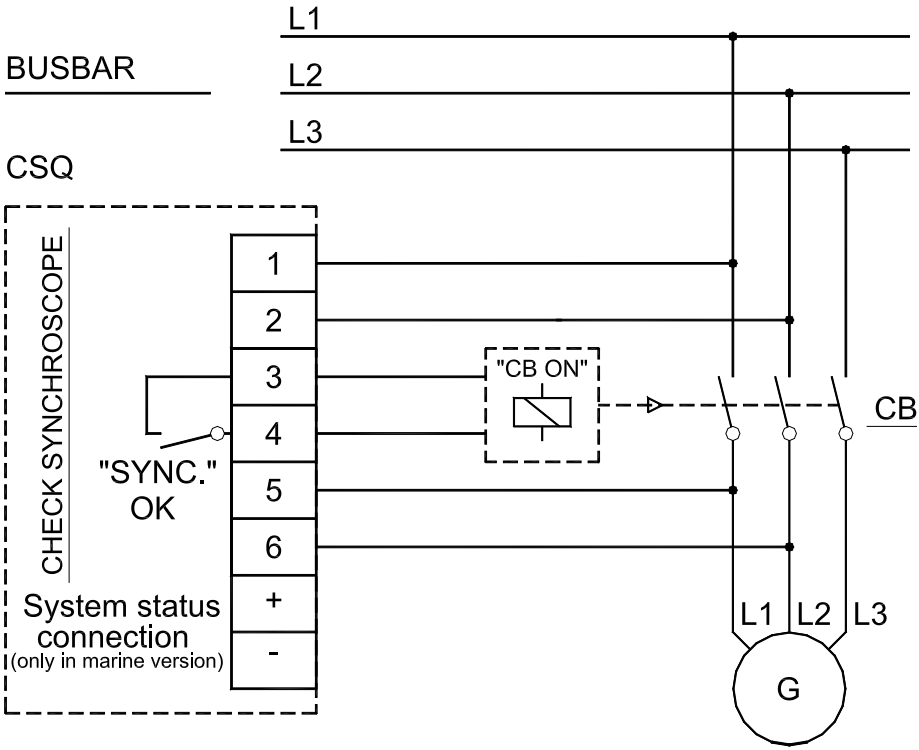

6. Commissioning

Before commissioning: Check phases for correct voltage and correct phase sequence.

Warning: Incorrect voltage may lead to malfunction and damage of the unit.

7. Technical data

Accuracy:	±2° (electrical degrees)	
Resolution:	10° (36 LEDs)	
Settings, range:	$\Delta\varphi$:	±5…20° in 1° steps or ±10…40° in 2° steps
	ΔU:	±1…10% in 1% steps
	t_R :	0…1 sec. in 0.1 sec. steps or ∞
	t_d :	0…1 sec. in 0.1 sec. steps
	U_{bus} offset:	Off or 4 levels of noise suppression (dead bus)
Max. frequency difference:	No limit	
Input range (U_N):	100…127V AC (115V AC) or 220…240V AC (230V AC) or 380…415V AC (415V AC) or 440…480V AC (450V AC)	
Busbar input:	Load: 2kΩ/V	
Generator input:	(Max. 2VA). Also supply for the unit	
Max. input voltage:	1.2 x U_N, continuously Above 450V: 1.1 x U_N, continuously 2 x U_N for 10 sec.	
Frequency range:	40…70Hz (supply)	
Relay contact:	1 SPST-NO-contact	
Relay contact ratings: (Gold plate silver alloy)	Resistive loads:	AC1: 8A, 250V AC DC1: 8A, 24V DC
	Inductive loads:	AC15: 3A, 250V AC DC13: 3A, 24V DC
	(UL/cUL:	Resistive load only)
Mechanical life:	2 x 10^7	
Electrical life:	1 x 10^5 (nominal value)	

Optocoupler output:	System status off = failure NpN optocoupler output Max. 40V, 10mA 2 wires AWG 20 (red/black) 30 mm length (Only in marine version)
Temperature:	-10…55°C (nominal) -25…70°C (operating) -40…70°C (storage)
Temperature drift:	Set points: Max. 0.2% of full scale per 10°C
Galvanic separation:	According to EN/IEC61010-1 All input/output groups to ground: 3.75kV Between all input/output groups: 3.75kV Test conditions: 50Hz, 1 min.
Climate:	HSE, to DIN40040
EMC:	CE-marked according to EN50081-1/2, EN50082-1/2 and IEC255-3
Connections:	Max. 2.5 mm^2 (single-stranded) Max. 1.5 mm^2 (multi-stranded)
Materials:	All plastic parts are self-extinguishing to UL94 (V0)
Protection:	Front: IP52. Terminals: IP20 According to IEC529 and EN60529
Type approval:	For current approvals please see www.deif.com (Only valid for marine version)
UL listing:	On request, the instrument can be delivered according to UL listing: UL508, E230690 T_{ambmax} 50°C For use in a flat surface of type 1 enclosure Wire: 24-12 AWG Use 60/75° C copper conductors only Main disconnect is to be provided by installer Terminal screw torque: 5-7 lb-in. Installed in accordance with the NEC (United States) or the CEC (Canada) **CAUTION: Risk of electrical shock. More than one main disconnect may be required to de-energize equipment before servicing.**

Dimensions:	Please see drawing in section 8
Panel cut-out:	92 x 92 ±1 mm
Weight:	< 0.40 kg

8. Dimensions

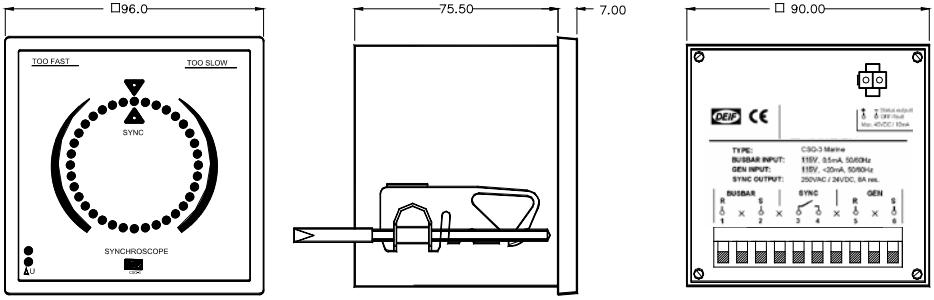

All dimensions in mm.

9. Order specifications

Input voltage and type must be specified when ordering the CSQ-3.

Order specification for the CSQ-3 consists of the following:

CSQ-3 - U_N - type

where U_N and type are as follows:

Code	Function	Options
U_N	Input voltage	'115V': (100…127V AC input range) '230V': (220…240V AC input range) '415V': (380...415V AC input range) '450V': (440...480V AC input range)
Type		**'Land'**: Means the land version without GL approval. This is the standard version. **'Marine'**: Means the marine version with GL approval and equipped with an additional output for surveillance.

Example of an order specification for the CSQ-3

CSQ-3 – 415V – Marine

Appendix 1: Setting and parameters for synchronising

Settings

ΔU

Here the allowed relative voltage difference between GEN and busbar is adjusted. The regulating range is ±1…10% in steps of 1%. The adjustment is made individually for ΔU_{MIN} and ΔU_{MAX}, so asymmetrical adjustment is possible. The setting is done according to the following formula:

$$\Delta U_{MIN}, \Delta U_{MAX} = \frac{(U_{GEN} - U_{BUSBAR}) \times 100}{U_{BUSBAR}}$$

If the preset value is exceeded, one of the two U_{GEN} LEDs will emit red light, and synchronising is not possible.

If the generator voltage is too low, the U_{GEN} too low LED will be lit.
If the generator voltage is too high, the U_{GEN} too high LED will be lit.
If both the U_{GEN} LEDs are lit simultaneously, there is an overvoltage error on the input. In this case, disconnect the unit and check the applied voltage level!

$\Delta\varphi$

Here the phase window is adjusted, in which synchronising can take place. The adjustment starts from ±5° and the window can open symmetrically or asymmetrically around this value.
The regulating range is -20°...-5° and 5°...20°, in 1° steps or
-40°...-10° and 10°...40°, in 2° steps.

t_R

Here the length of the pulse for the synchronising relay is adjusted.
The regulating range is 0...1 sec. in steps of 0.1 sec. or ∞.
This function makes it possible to adjust the synchronising pulse according to the external breakers demands (closing time).

For special purposes it is also possible to adjust t_R to ∞ (infinite). This setting will (after t_d has expired) provide a synchronising pulse as long as the following conditions are met:

- Phase is inside the phase window
- Voltage > 70% of $U_{NOMINAL}$

t_d

Here the time is adjusted, in which the phase difference must be inside the preset synchronising window to allow SYNC. The regulating range is 0...1 sec. in steps of 0.1 sec.
t_d is only activated if t_R is set to ∞.

Dead bus

The possibility of closing the circuit breaker even though the busbar voltage is missing. There is an extra adjustment, U_{BUS}, where the level of dead busbar can be set. This facility makes dead bus synchronising possible, even though there is noise on the busbar. The regulating range is off or 10...40% of U_N in steps of 10%.

Setting	**Dead bus function U_{BUS}**
OFF	Deactivated
10	Activated within the range 15-25% of actual generator voltage > 70%
20	Activated within the range 25-30% of actual generator voltage > 70%
30	Activated within the range 30-40% of actual generator voltage > 70%
40	Activated within the range 40-50% of actual generator voltage > 70%

Please notice that this setting is a coarse step regulation for suppression of possible noise on the busbar. The scale 10-20-30-40 should therefore be considered more as a 4 level noise suppression than as an accurate measuring setting.

Please notice that when the voltage on the net has been restored, the CSQ-3 will remain in the dead bus function for a period of 5 seconds.

Guidelines for setting of the CSQ-3

Visual representation of the parameters

The figure below shows the different parameters:

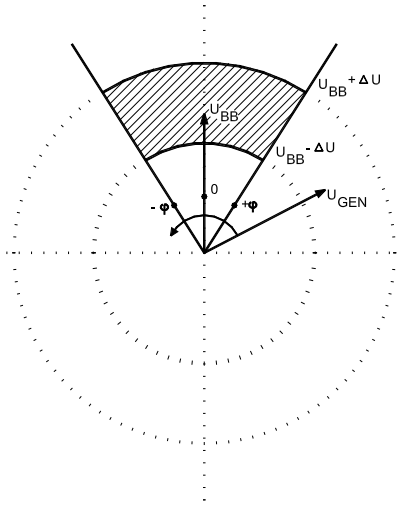

Commissioning

Normally t_R is adjusted so it equals the circuit breakers closing time and $\Delta\varphi$-/$\Delta\varphi$+ to max. allowed synchronising error.

Please notice that the CSQ-3 calculates space for t_R (breaker closing time) within the chosen $\Delta\varphi$ window at the actual Δf (slip frequency). Therefore the max. synchronising error will never exceed the chosen $\Delta\varphi$ window.

Calculation example

The breaker closing time is 200mS, and t_R is chosen to 200mS. The phase window is set symmetrically to $\pm$10° (electrical degrees). Then the max. Δf can be calculated using the following formula:

$$\Delta f = \frac{(\Delta\varphi-) + (\Delta\varphi+)}{360 \times t_R}$$

$$\Delta f = \frac{10 + 10}{360 \times 0.2} = 0.278\text{Hz}$$

Synchronising relay pulse will not be emitted if Δf exceeds 0.278Hz.

Calculation of the actual synchronising error – not to be mistaken for the max. synchronising error which is solely determined by the chosen $\Delta\varphi$ window
The next examples apply to situations where t_R is set in the range 0.1...1 sec.

Example:
With a slip frequency (Δf) of 0.1Hz the phase changes with a rate of 36°/sec. If $\Delta\varphi$ is set to $\pm$10° and t_R is set to 0.2 sec. = breaker closing time, the actual synchronising error can be calculated.

The moment the phase is within the set phase window ($\Delta\varphi$) the relay of the CSQ-3 is activated on condition that there is space for the chosen t_R, in this case 0.2 sec. If Δf is too big it will cause lack of space for the chosen t_R time within the chosen $\Delta\varphi$ window.

Example 1:
With a phase change of 36°/sec. the phase will change 7.2° during the 0.2 sec. This means that we can now calculate the phase displacement at the exact moment when the breaker closes. $\Delta\varphi$ is set to -10° and +10°. The CSQ-3 relay will be activated -10° before top (12 o'clock position), and after 7.2° the breaker closes which means that the breaker closes 10° - 7.2° = 2.8° before top, that is an actual synchronising error of -2.8°. Applying the formula on page 17 the max. Δf with the shown settings can be calculated to be 0.277Hz.

Example 2:
If we assume that the slip frequency in the actual case is 0.2Hz the phase changes with a rate of 72°/sec. With a phase change of 72°/sec. the phase will change 14.4° during the 0.2 sec. which gives a synchronising error of 10° - 14.4° = -4.4°. The negative result means that the breaker closed 4.4° after top, that is an actual synchronising error of +4.4°.

Example 3:
The same as examples 1 and 2 but with a slip frequency of 0.3Hz = 108°/sec. At t_R = 0.2 sec. the phase will change 21.6°. As the $\Delta\varphi$ window is set to $\pm$10°, the CSQ-3 will calculate that there is no longer space for a t_R pulse of 0.2 sec. and therefore no relay pulse is emitted.

General formula for the above-mentioned:
Actual synchronising error = ($\Delta\varphi$-) - 360 x Δf x breaker closing time (t_R).

Alternatively at negative slip frequency:
Actual synchronising error = ($\Delta\varphi$+) - 360 x Δf x breaker closing time (t_R).

If the result is negative the synchronising will take place after top (0°) provided that there is space for t_R within the $\Delta\varphi$ window.

If you want to avoid synchronising after top, $\Delta\varphi$ is set asymmetrically. At positive slip frequency (Δf) as in the shown example a setting of $\Delta\varphi$- to -10° and $\Delta\varphi$+ to +5° would have as a result that synchronising after top of more than 5° would not be possible.

The length of the relay pulse t_R can never be set to a lower value than the breaker closing time, whereas t_R can be set to a higher value if you want the max. slip frequency (Δf) to be lower to limit the rush of current of the breaker (the generators) in connection with the synchronising.

Example:
In the light of the above-mentioned examples t_R is changed to 0.4 sec. With a slip frequency (Δf) of 0.1Hz = 36°/sec. and t_R = 0.4 sec. the phase changes 14.4° during the 0.4 sec. If $\Delta\varphi$ is set to ±10° the CSQ-3 will calculate that there is space for t_R. With this setting the synchronising error will be identical with the synchronising error in example 1 (-2.8°) as the breaker closing time is the same (0.2 sec.). But the max. Δf can now only be 0.138Hz and not, as in example 1, 0.277Hz. The max. slip frequency (Δf) could also be controlled by setting $\Delta\varphi$ differently. If $\Delta\varphi$ was set to ±5° instead of ±10° the max. Δf would be 0.138Hz at t_R = 0.2 sec. With this setting and a Δf of 0.1Hz the actual synchronising error will be +2.2°. Please notice that the breaker now closes 2.2° after top and not, as in example 1, 2.8° before top. The choise of setting must be based on the knowledge of the actual installation in which the CSQ-3 is applied. But the examples are to show that t_R and $\Delta\varphi$ are inextricably connected and influence the same parameters, but with different results as to the calculation of the actual synchronising error.

If t_R is set to infinite (∞) the max. allowable Δf can no longer be controlled by means of t_R. When t_R is set to infinite the setting of t_d is automatically activated. Infinite t_R is primarily used where the CSQ-3 is applied as supervision of an automatic synchronising system or in connection with closing of a tie breaker where you want to control frequency, phase and voltage to be within certain values before the breaker is closed.

The setting of t_d is to be calculated from $\Delta\varphi$ and the estimated max. allowable Δf.

$$t_d = \frac{(\Delta\varphi-) + (\Delta\varphi+)}{360 \times \Delta f}$$

Example 1:
$\Delta\varphi$ is set to ±7°, and a max. Δf of 0.05Hz at the moment of synchronising is estimated to be allowable.

$$t_d = \frac{| -7 | +7}{360 \times 0.05}$$

t_d = 0.77 sec. ~ 0.8 sec.

Please notice that when t_R is set to infinite (∞) the synchronising pulse (the relay contact of the CSQ-3) is interrupted the moment the phase is outside the set phase window. As the timer t_d starts the moment the phase is within the set phase window $\Delta\varphi$, and is to expire in the period the phase is still within the phase window before the synchronising pulse is emitted, it means in the shown example that with an actual Δf

of 0.049Hz the synchronising pulse would only be 18 msec. To avoid transmission of such a short synchronising pulse, the CSQ-3 performs a calculation based on Δf and the actual phase window to make room for a synchronising pulse of at least 100 msec. Referring to example 1, 100 msec must be subtracted from the calculated t_d to allow a max. Δf of 0.05Hz.

Function in particular situations:
In connection with test “on desk” the CSQ-3 is normally connected to the same supply point so that frequency and phase are completely identical on the generator input and the busbar input. At this test form the following must be noticed:

The first time the CSQ-3 is connected, synchronising pulse is emitted whether the $\Delta\varphi$ window is set symmetrically or asymmetrically. If only the busbar input is interrupted subsequently (the CSQ-3 is supplied with auxiliary voltage from the generator input), synchronising pulse is only emitted if the interruption has lead to the result that the $\Delta\varphi$ window was left in connection with the interruption (occurs if the interruption results in a noise pulse).

If $\Delta\varphi$ is set asymmetrically so that only e.g. **positive Δf** is accepted and Δf changes sign (inverse direction) after the phase between generator and busbar is within the phase window, the synchronising pulse is not interrupted until the $\Delta\varphi$ window is left, even if Δf has changed sign to **negative Δf**.

If Δf is changed to correct direction of rotation after the phase is within the phase window the CSQ-3 calculates if there is space for t_R (the synchronising pulse), and in that case synchronising pulse is emitted.

Errors and changes excepted