IP20 protected busbar system

BTVC DT NH00 185mm Three pole switching / 1 hand operated

pronutec
gorlan team





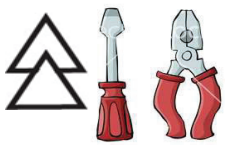

For more information:

Bottom connection

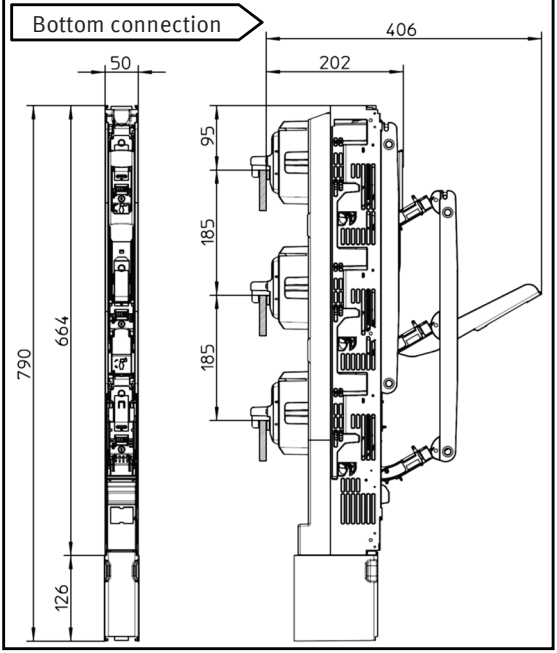

Top connection

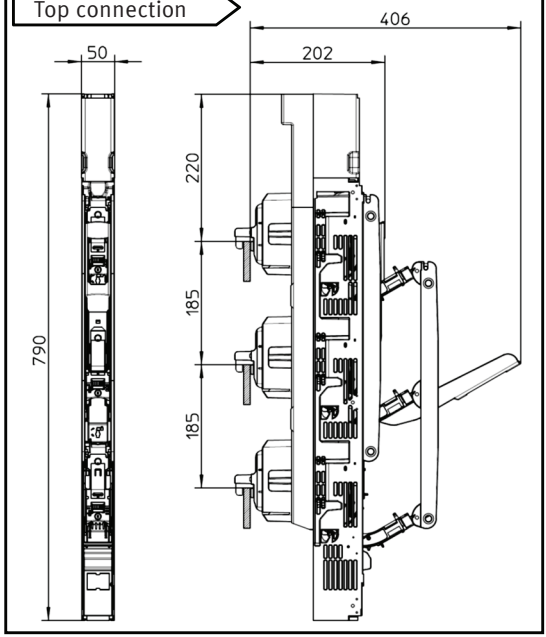

1.A Connection to the busbars

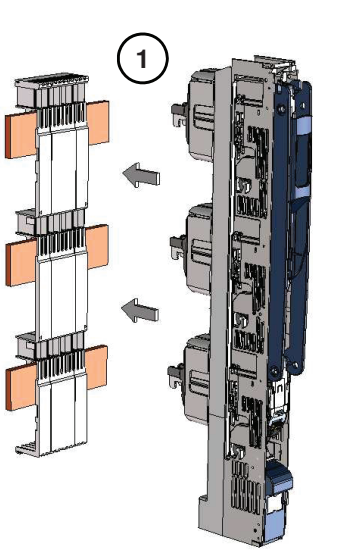

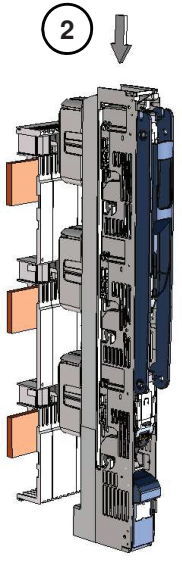

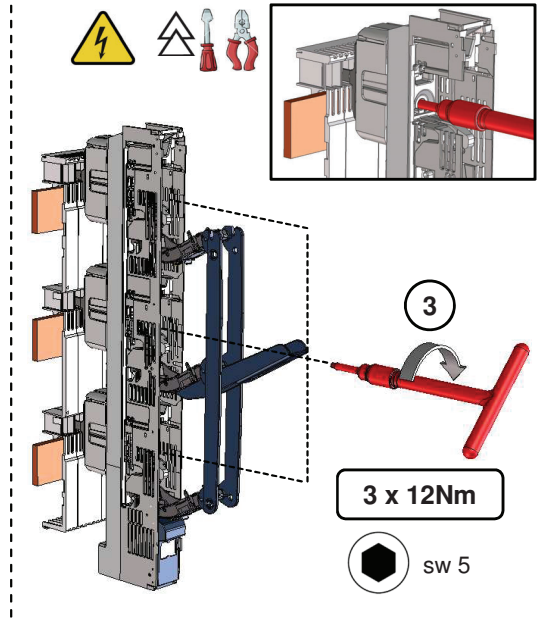

1.C Connection trought busbar support covers

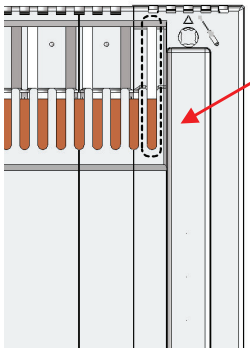

Art. number:
- 445.04.001
- 445.04.002

x3 phases

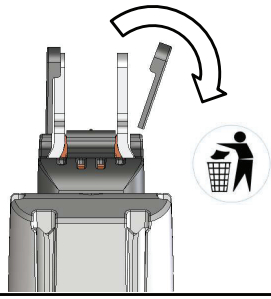

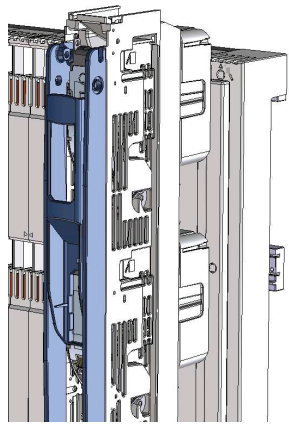

2 Terminals connection

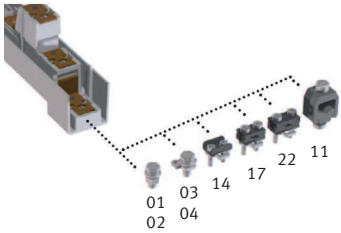

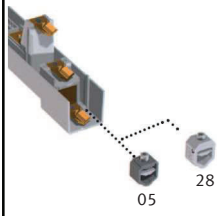

XX Code XX Code	Type of clamp Anschlussvarianten	Torque Anzugsdrehmoment (Nm)	Cross section / Klemmenquerschnitt (mm²) rm	re	sm	se
01	M8 screw A2 M8-Schraube A2	12	Cable lugs DIN 46235 Kabelschuhe DIN 46235 Max 120mm²			
02	M8 screw Zn M8-Schraube Zn	12				
03 *	M8 screw A2+M5 M8 Schraube A2+M5 (15mm)	12				
04 **	M8 screw A2+M5 M8 Schraube A2+M5 (18mm)	12				
14	Bridge clamp Brückenklemme	2,5	10-70	6-70	35-70	50-70
17	Prism terminal - 70 Prismenklemme 70	2,5	10-70	10-70	35-70	50-70
22	Prism terminal - 95 Prismenklemme 95	2,5	10-95	10-95	35-95	50-95
11	Screwed V terminal V-Klemme geschraubt	15	10-95	16-120	35-120	50-150
28	V-Al Terminal V-Al Klemme	15	10-95	10-95	25-120	25-150
05	V- Steel Terminal V-Stahl Klemme	15	10-70	10-70	25-95	20-120

3 Fuse connection/disconnection

ON / OFF: MOVE LEVER QUICKLY!

EIN-UND AUSSCHALTEN: SCHNELL SCHALTEN!

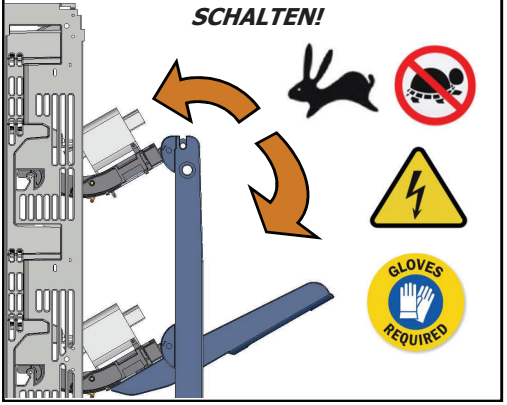

Unlock fuse

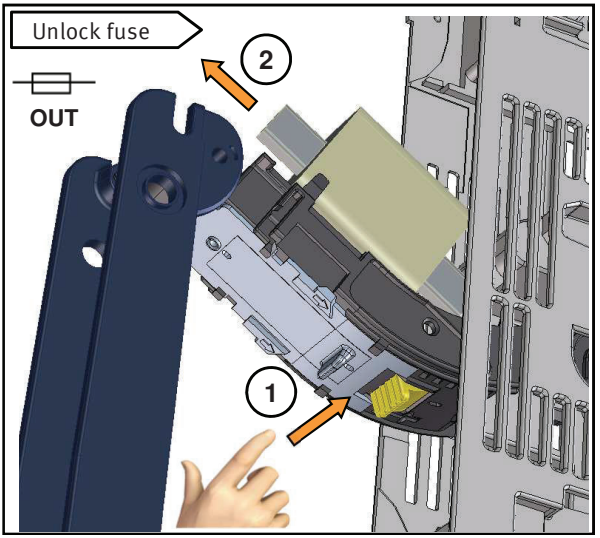

1.B Turn into Top Connection

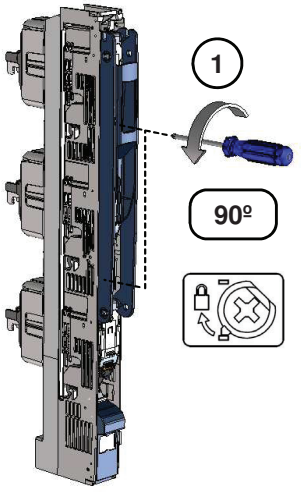

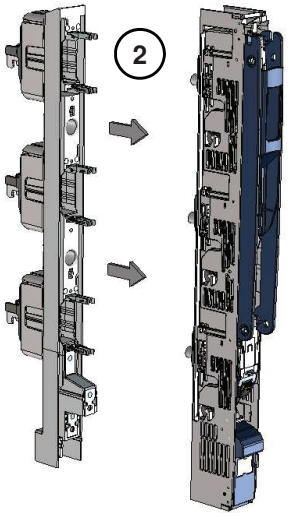

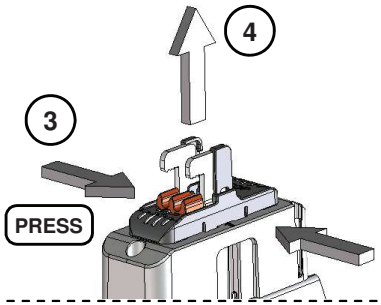

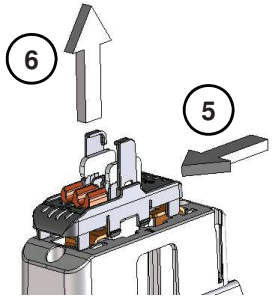

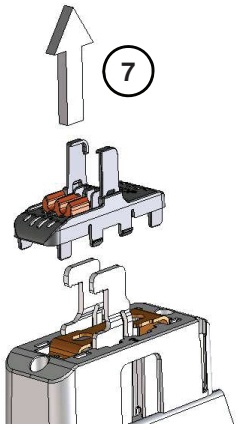

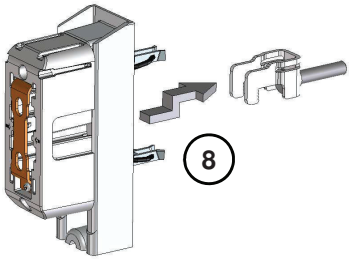

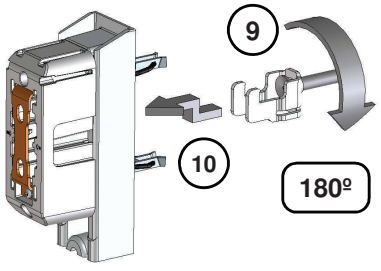

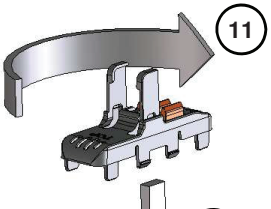

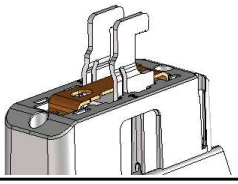

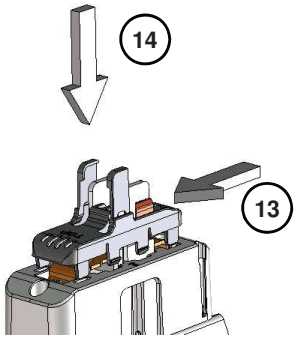

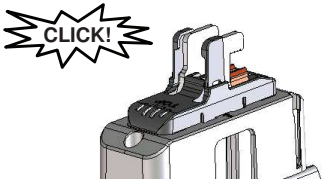

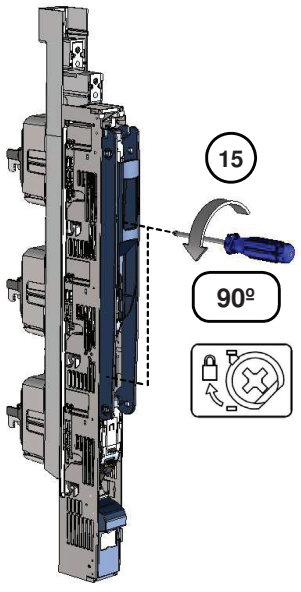

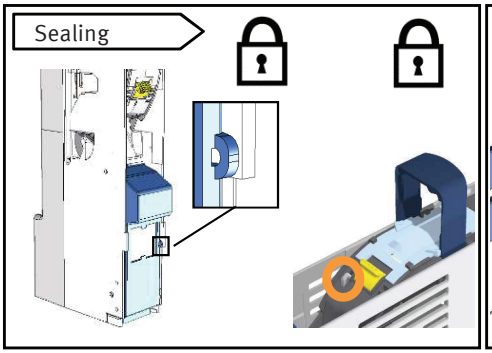

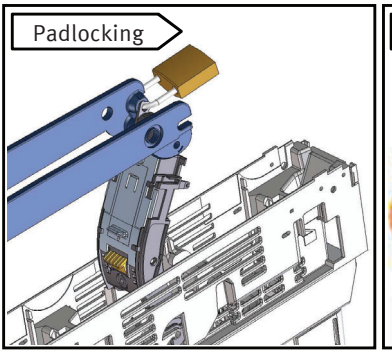



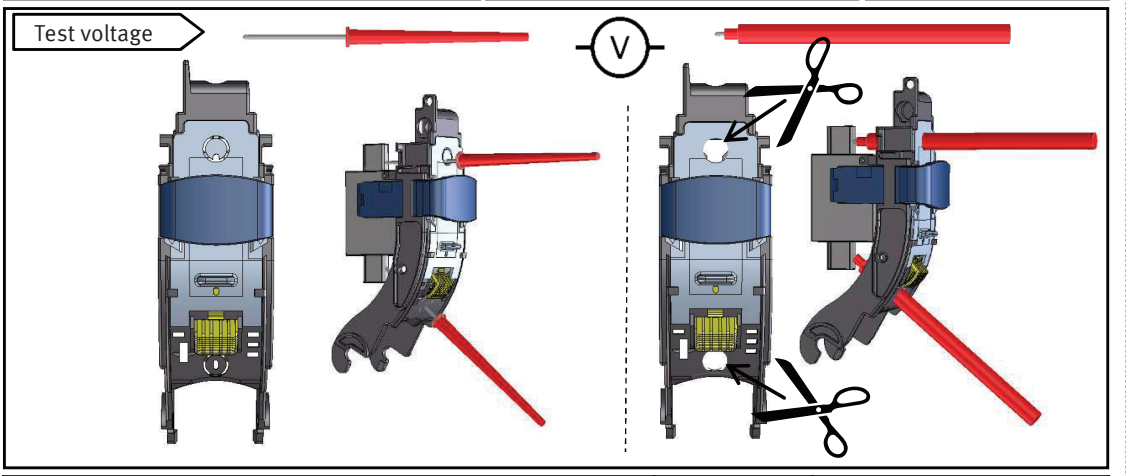

		BTVC DT
Applicable standard/ *Norm*		IEC 60947-3
Rated operational voltage/ *Bemessungsbetriebsspannung*	Ue (V)	500AC 690AC
Rated operational current/ Bemessungsbetriebsstrom	Ie (A)	160
Rated frequency/ *Bemessungsfrequenz*	F (Hz)	50
Rated cond. short-circuit current/ *Bedingter Bemessungskurzschlussstrom*	(kAeff)	120
Rated short circuit making capacity/ *Bemessungskurzschlusseinschaltvermögen*	(kAeff)	120
Rated insulation voltage/ *Bemessungsisolationsspannung*	Ui (V)	1000
Rated impulse withstand voltage/ *Bemessungsstossspannung*	Uimp (kV)	8
Utilization category/ *Gebrauchskategorie*		AC-22B
Protection degree/ *Schutzart*		IP20 opened / IP30 closed
Size of fuse acco. to IEC 60269/ *Sicherungseinsatz gemäß IEC 60269*		NH000 / NH00
Max. rated current (gL/gG)/ *Max. Bemessungsstrom (gL/gG)*	In (A)	160
Max. Power losses per fuse/ *Max. zul. Verlustleistung pro NH-SE*	Pv (W)	12

E Pronutec no se hace responsable de cualquier daño causado por un uso incorrecto de este producto. / **GB** *Pronutec is not responsible for any damage caused by a wrong use of this product.* / **D** *Pronutec übernimmt keinerlei Haftung oder Verantwortung bei unsachgemäßer Bdienung oder Anwendung der Produkte.*

IP44503