IP20 protected busbar system

Feeding clamp

pronutec gorlan team





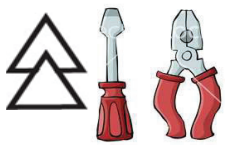

For more information:

Bottom connection

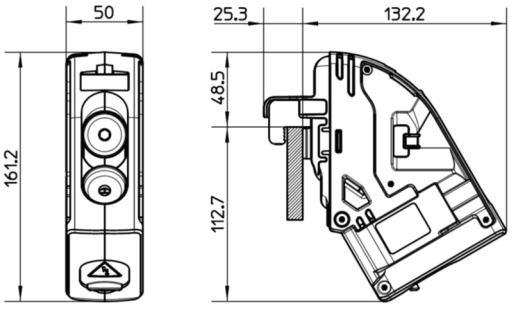

Top connection

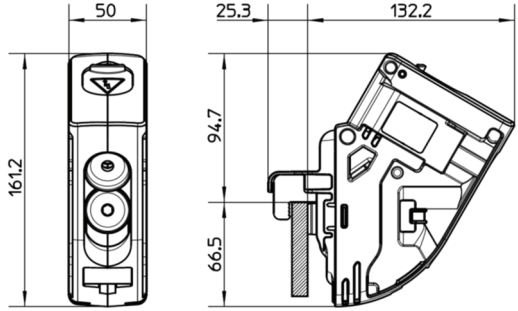

1.A Connection to the busbars

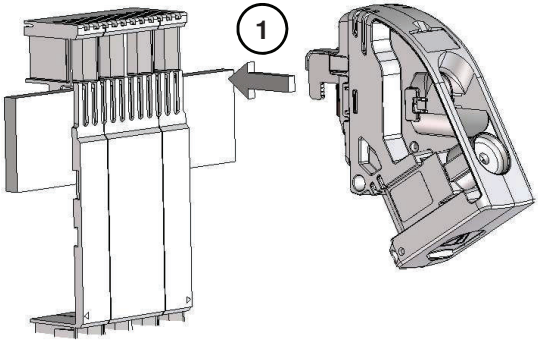

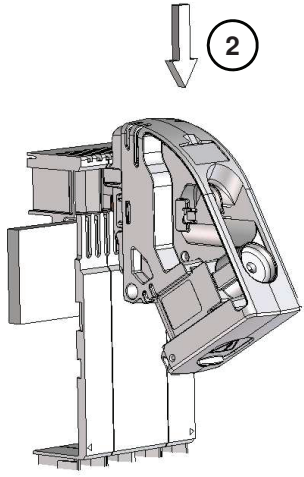

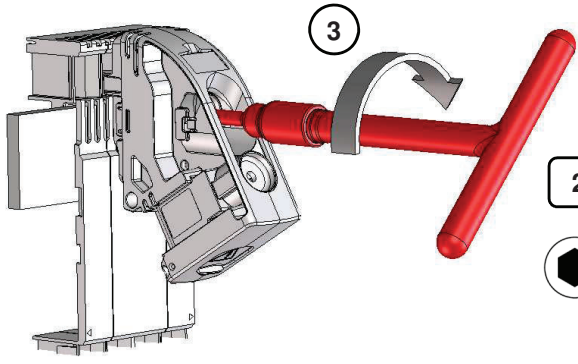

25Nm

sw 6



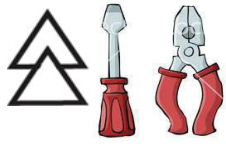

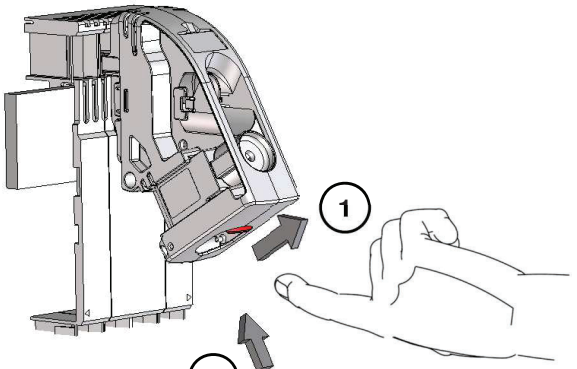

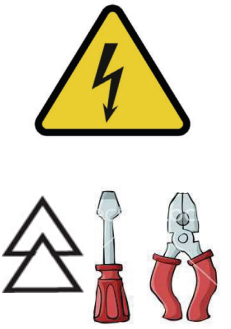



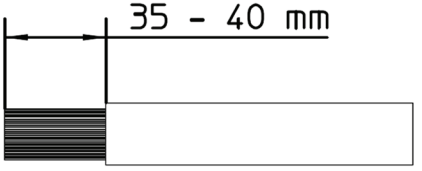

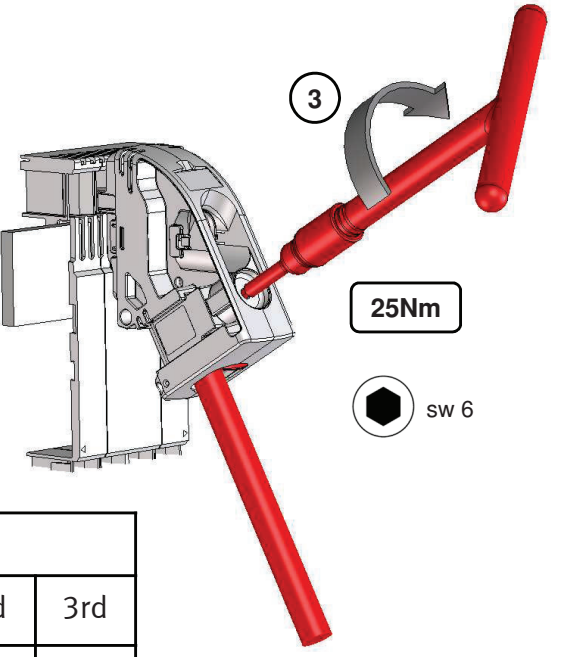

Cable connection order			
	1st	2nd	3rd
Bottom connection	L3	L2	L1
Top connection	L1	L2	L3

	Cable sections (mm^2) acc. To DIN VDE 0295			
Reference	rm	re	sm	se
445.08.001	35 - 240	35 - 150	35 - 240	50 - 240
445.08.002	50 - 185	70 - 240	70 - 240	95 - 300

3 Turn into Top connection

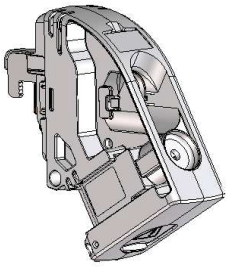

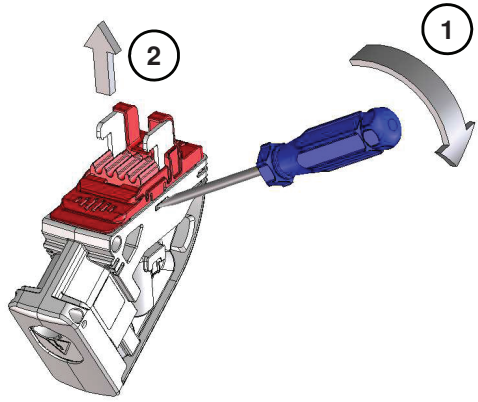

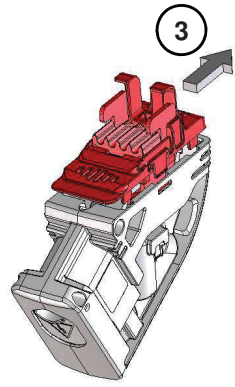

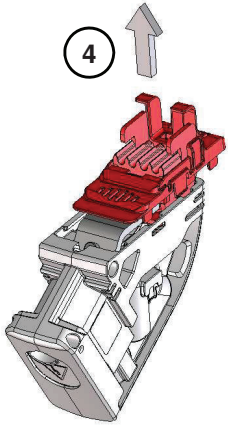

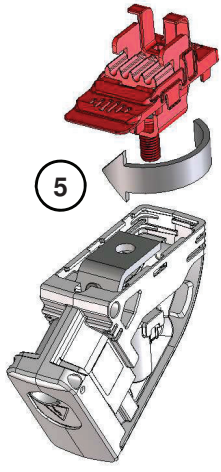

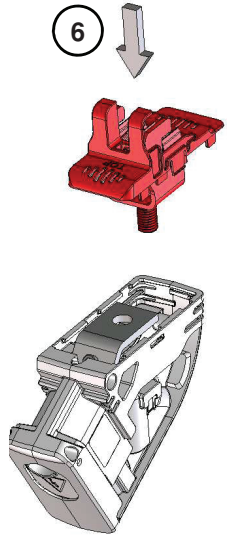

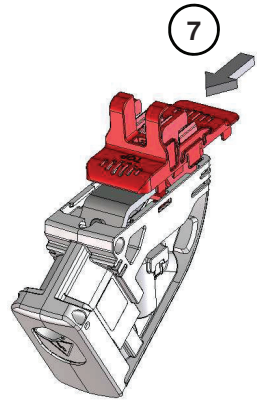

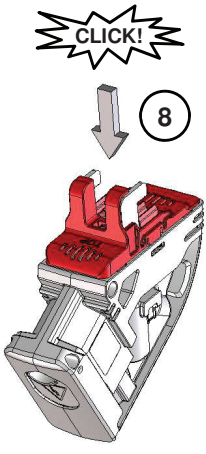

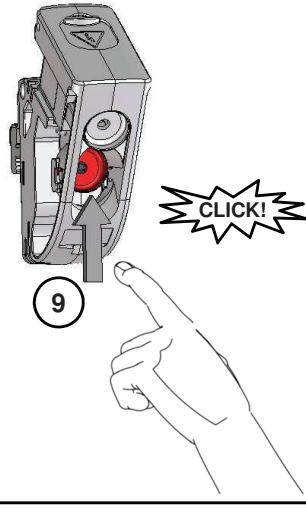

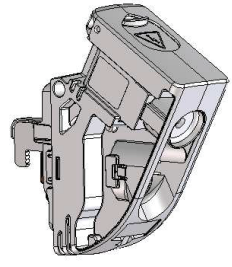

4 Multiple configurations

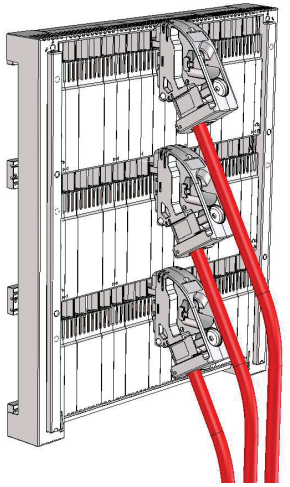

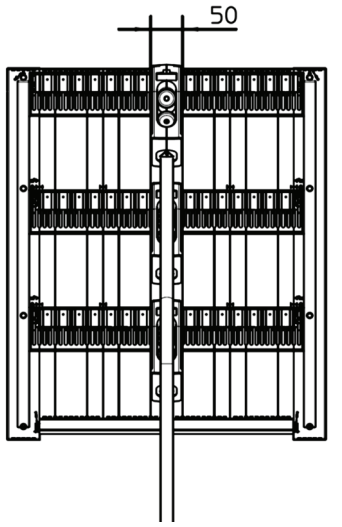

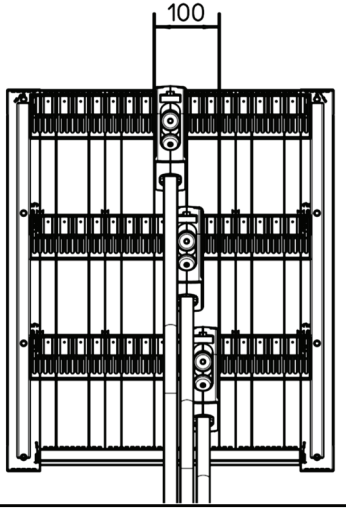

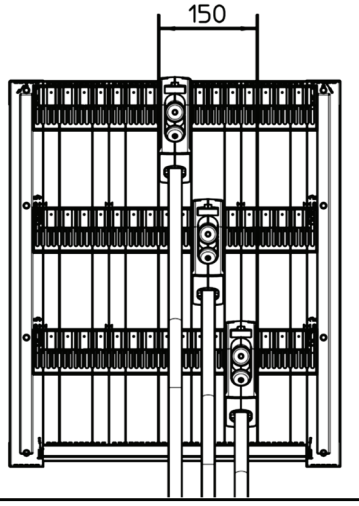

		Feeding Clamp
Applicable standard/ *Norm*		IEC 61439-1
Rated operational voltage/ *Bemessungsbetriebsspannung*	Ue (V)	400AC 500AC 690AC
Rated operational current/ Bemessungsbetriebsstrom	Ie (A)	500
Rated frequency/ *Bemessungsfrequenz*	F (Hz)	50
Rated short-time withstand current/ *Bemessungskurzzeitstromfestigkeit*	Icw (kA) / 1s	15
Rated peak withstand current/ *Bemessungsstoßstromfestigkeit*	Ipk max (kA)	30
Protection degree/ *Schutzart*		IP20

E Pronutec no se hace responsable de cualquier daño causado por un uso incorrecto de este producto. / **GB** *Pronutec is not responsible for any damage caused by a wrong use of this product.* / **D** *Pronutec übernimmt keinerlei Haftung oder Verantwortung bei unsachgemäßer Bdienung oder Anwendung der Produkte.*