PRODUCT DATA SHEET

Battery-operated hydraulic compression tool Stilo60

Mod. Nr.: Stilo60 **Item Nr.:** 715027
Date: 22,06

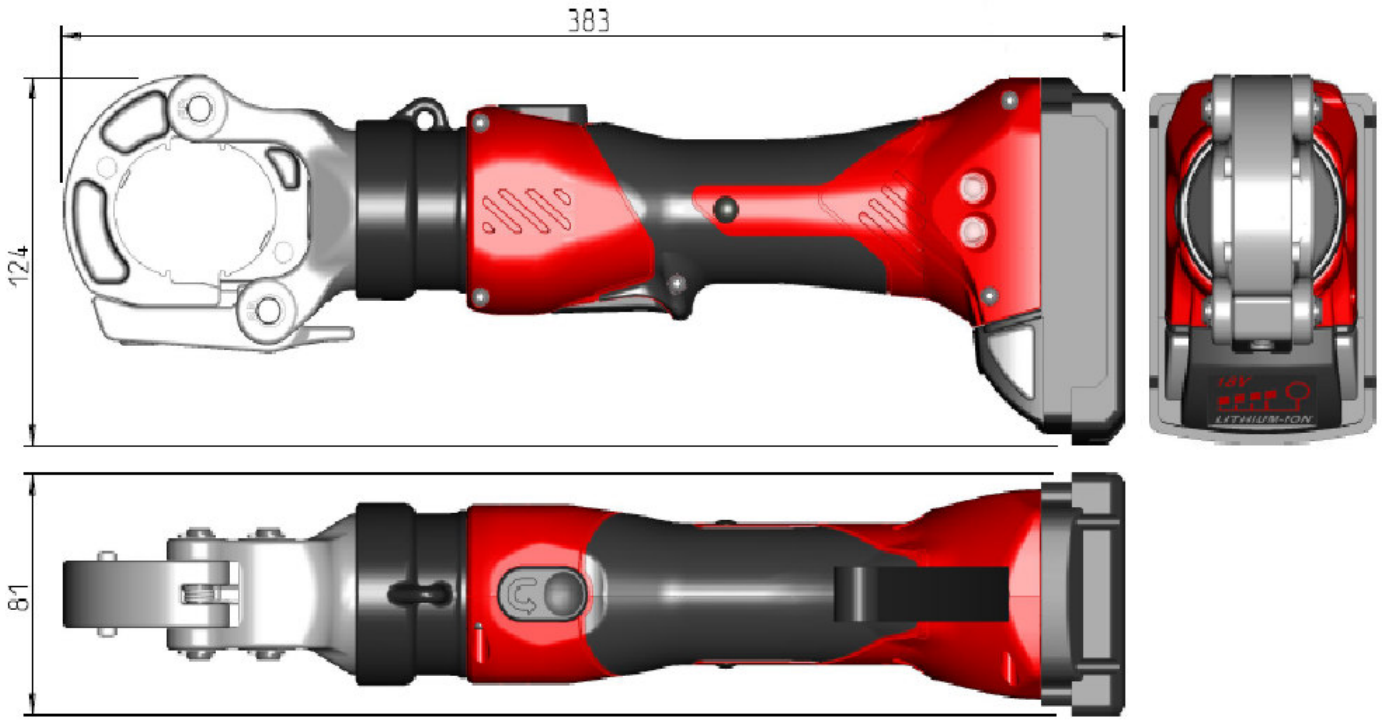

APPLICATION

The battery-operated hydraulic tool Stilo60 is designed to crimp terminals and connectors for aluminium and copper cables with up to 300mm² maximum cable cross sections.

MATERIALS

The tool head is made of hardened high resistance steel with surface protection.
The dies are made of hardened high resistance steel to EN 10020 with surface protection.
The pump is made of high resistance material.
Body made entirely of shock-resistant and insulating fibreglass reinforced polyamide with a soft-grip handle.

TECHNICAL CHARACTERISTICS:

Battery powered pump crimping force of 60kN.
Rapid advance three-piston axial pump.
Electronic pressure sensor-controlled crimping.
Quick-return via patented check valve.
System pressure safety relief valve set to around 650bar (65MPa).
Automatic pressure and control limitation via pressure sensor.
The device has an automatic return feature and returns to the starting position when the crimping cycle is complete.
Electronic crimping cycle control and monitoring.
Emergency manual return.
Lightweight, compact and robust frame.
Weight about 3.3kg (device and battery)
Emergency manual return.
Soft start and quick stop to safeguard the motor and gear reducer.
When not under pressure, the crimping head can rotate 360° around the longitudinal axis in order to operate in difficult-to-reach places.
Ergonomic design provides easy operation for both left- and right-handed users.
Automatic motor shut down and return at the end of the crimping cycle.
Carrying strap.
Operating temperature range: -10°C / +40°.
Multi-function electronic system with sleep mode, maintenance and battery check indicators:

PRODUCT DATA SHEET

Battery-operated hydraulic compression tool Stilo60

Mod. Nr.: Stilo60 **Item Nr.:** 715027
Date: 22,06

intercable
TECHNOLOGY IS OUR PASSION

Error codes Service:

LED-Display		Cause / remedy
after application (cycle)		
	steady green	Working value OK
	flashing red/green	Working value OK but service interval exceeded / Service
	flashing red	Working value is at the limit / contact the service center
	steady red	Working value is outside range / return device to customer service
	steady orange	Temperature is outside the tolerance range / cool or warm the device
after power on (battery insertion)		
	steady green	Power tool is ready for operation
	steady orange	Temperature is outside the tolerance range / cool or warm the device
	steady red	Battery empty / change the battery.

Error codes Battery:

LED-Display		Cause / remedy
after application (cycle)		
	flashing red	Battery charge is below 10% / Change the battery.
	steady red	Battery empty / change the battery.
after power on (battery insertion)		
	steady green	Power tool is ready for operation
	steady red	Battery empty / change the battery.

CONTROL FEATURES

Automatic switching to power saving mode after about 5 min.
Simple push button start.
Microcontroller control.
LED display indicates work cycle.
LED display indicates battery level and malfunction.
All work cycles and error messages recorded on internal memory (approximately 100,000 cycles).
All cycles and error messages read via USB.
Drive motor controlled for longer useful life of the gear reducer, motor and battery.
Precision and memory capable pressure setting using an electronic pressure sensor.
Uninterrupted work cycles from continuous monitoring of the remaining battery charge level.
Integrated Service Management.
Software updates via USB.
Temperature control.

BATTERY TECHNOLOGY

Voltage: 18V DC
Capacity: 2,0 Ah
Charge time: approx. 30 min.
Fuel gauge displays remaining charge.
Individual cell monitoring to optimize tool run time and ensure long term pack durability.
Full enclosure protects cells and provides a strong structure delivering maximum durability.
Most advanced system electronics in cordless power tools with unique digital performance enhancement.
Operates down to -20°C.
Total system communication with overload protection increases tool life.
Up to 2x more run time.

PRODUCT DATA SHEET

Battery-operated hydraulic compression tool Stilo60

Mod. Nr.: Stilo60 **Item Nr.:** 715027
Date: 22,06

intercable
TECHNOLOGY IS OUR PASSION

LABELING

Brand	intercable
Model number	Stilo60
Serial number	012345
Compression force	60kN
Symbol	CE
Year of production	YYYY
Nominal voltage	18 V
Symbol	
Labels:	

PACKING AND WEIGHTS

Rigid case to contain the tool, reserve battery, battery charger and the dies.

Battery-operated hydraulic compression tool Stilo60 with battery	ca. 3,3kg
Set battery-operated hydraulic compression tool Stilo60 with rigid case and battery charger	ca. 6,3kg

OPTIONAL

Dies
230V AC mains adapter (NG3)

APPLICATION RANGE

Hexagonal crimping dies to DIN 48083 for terminals and connectors in copper	300 mm²
Hexagonal crimping dies to DIN 48083 for terminals and connectors in aluminium	240 mm²
Hexagonal crimping dies to DIN 48083 for aluminium/steel	120/20 mm²
Hexagonal crimping dies to DIN-similarly	300 mm²
Pre-rounding dies for sector-shaped Al- and Cu- conductors	300 mm²
Indent crimping dies for terminal to DIN 46234	70 mm²
Indent crimping dies for fine stranded conductors	70 mm²
Oval- crimping dies for H-type branch terminals to DIN 48217	70 mm²
Trapezoidal crimping dies for cable end sleeves	150 mm²