PRODUCT DATA SHEET

Battery-operated hydraulic cutting tool Stilo-S40

Mod. Nr.: Stilo-S40 **Item Nr.:** 716049
Date: 22,06

intercable
TECHNOLOGY IS OUR PASSION

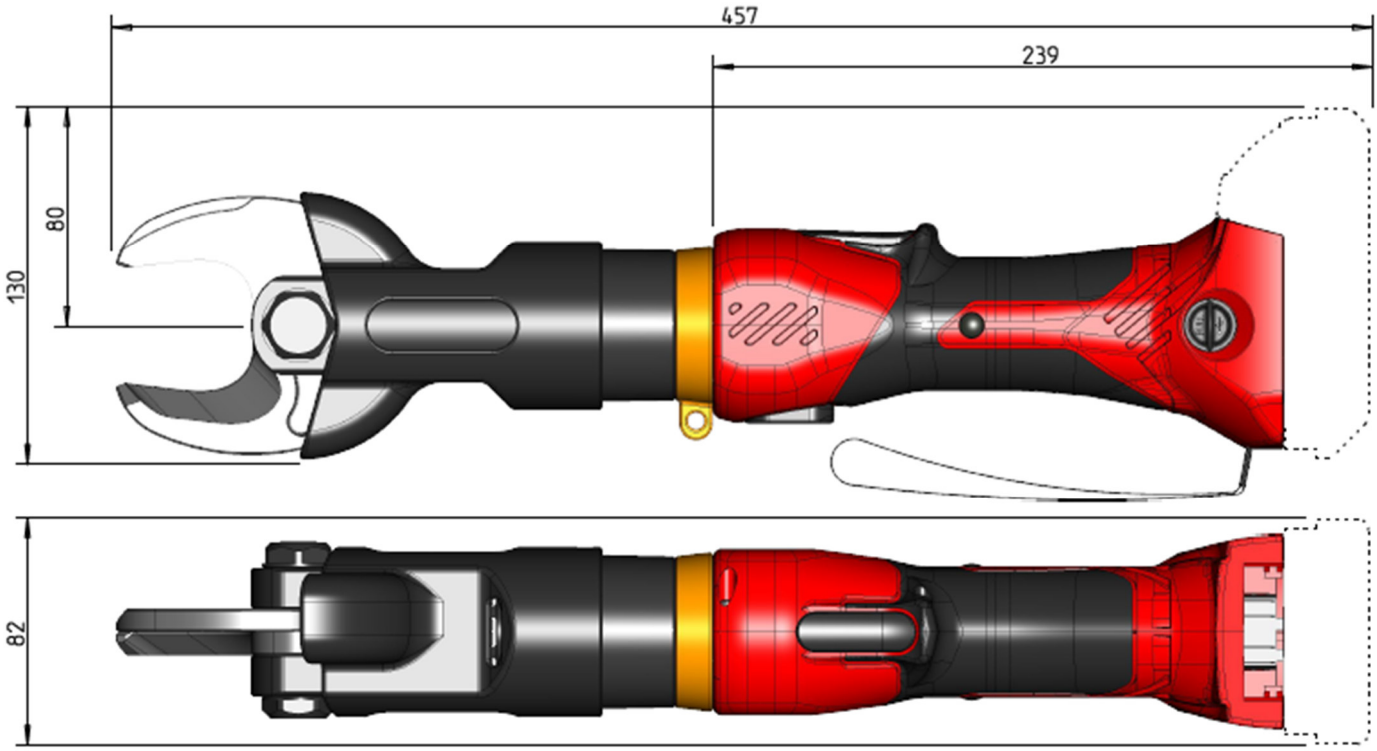

APPLICATION

The battery operated hydraulic cutting tool Stilo-S40 is suitable for cutting aluminium solid-sectoral-conductor max. 4x120mm², aluminium stranded-sectoral-conductor max. 4x120mm², copper stranded-sectoral-conductor max. 4x95mm² and flexible cables class 5.

MATERIALS

The tool head is made of hardened high resistance steel with black oxide surface protection.
The blades are made of hardened high resistance steel with a special treatment to reduce wear.
The pump is made of high resistance material.
Body made entirely of shock-resistant and insulating fibreglass reinforced polyamide with a soft-grip handle.

TECHNICAL CHARACTERISTICS:

The maximum cutting force is 29kN.
Pressure safety valve set to around 580bar (58MPa).
Rapid advance because of three-piston axial pump.
Quick return via patented return valve.
The device has an automatic return feature. It automatically returns to the starting position at the end of the cutting cycle, upon the device reached the maximal pressure or after releasing the start button.
Automatic motor shut down at the end of the cutting cycle.
Emergency manual-return.
Soft start and quick stop to safeguard the motor and gear reducer.
The cutting head can be rotated 360 ° in order to gain better access to tight corners and other difficult working areas.
Lightweight, compact and robust frame.
Ergonomic design provides easy operation for both left- and right-handed users.
Carrying strap.
Operating temperature range: -10°C - +40°C.
Protection grade: IP40.
Multi-function electronic with sleep mode, maintenance and batter check indicators.
Integrated, intelligent electronic module with the following functions and displays:

PRODUCT DATA SHEET

Battery-operated hydraulic cutting tool Stilo-S40

Mod. Nr.: Stilo-S40 **Item Nr.:** 716049
Date: 22,06

intercable
TECHNOLOGY IS OUR PASSION

Error code service:

LED-Display		Cause / remedy
after application (cycle)		
	steady green	Working value OK
	flashing red/green	Working value OK but service interval exceeded / Service
	flashing red	Working value is at the limit / contact the service center
	steady red	Working value is outside range / return device to customer service
	steady orange	Temperature is outside the tolerance range / cool or warm the device
after power on (battery insertion)		
	steady green	Power tool is ready for operation
	steady orange	Temperature is outside the tolerance range / cool or warm the device
	steady red	Battery empty / change the battery.

Error code battery:

LED-Display		Cause / remedy
after application (cycle)		
	flashing red	Battery charge is below 10% / Change the battery.
	steady red	Battery empty / change the battery.
after power on (battery insertion)		
	steady green	Power tool is ready for operation
	steady red	Battery empty / change the battery.

CONTROL FEATURES

Automatic switching to power saving mode after about 5 min.
Simple push button start.
Microcontroller control.
LED display indicates work cycle.
LED display indicates battery level and malfunction.
All work cycles and error messages recorded on internal memory (approximately 100,000 cycles).
All cycles and error messages read via USB.
Drive motor controlled for longer useful life of the gear reducer, motor and battery.
Uninterrupted work cycles from continuous of the remaining battery charge level.
Integrated service management.
Software updates via USB.
Temperature control.

BATTERY TECHNOLOGY

Battery voltage: 18V DC
Capacity: 2,0 Ah
Charge time: approx. 30min.
Display for the remaining charge of the battery
Individual cell monitoring to optimize tool run and ensue long-term pack durability
Optimized cell structure for maximum stability and optimal power output
Protected housing with rubberized pad
Temperature management to protect the battery even at low temperatures

PRODUCT DATA SHEET

Battery-operated hydraulic cutting tool Stilo-S40

Mod. Nr.: Stilo-S40 **Item Nr.:** 716049
Date: 22,06

intercable
TECHNOLOGY IS OUR PASSION

LABELING

Brand	intercable
Model number	Stilo-S40
Serial number	012345
Cutting force	29kN
Symbol	CE
Year of production	YYYY
RoHS	
Nominal Voltage	18V
WEEE symbol	
Labels:	

PACKING AND WEIGHTS

Rigid case (560 x 357 x 118mm) to contain the tool, reserve battery and battery charger.

Battery-operated hydraulic cutting tool Stilo-S40 with battery	approx. 3,1kg
Battery operated hydraulic cutting tool Stilo-S40 with rigid case, battery and battery charger	approx. 6,1kg

SET ASSEMBLY

Battery operated hydraulic cutting tool Stilo-S40
Battery 18V / 2,0 Ah Li-Ion (RA20)
Battery charger
Rigid case to contain the tool, reserve battery and battery charger
USB cable
Operating manual
Safety and maintenance instruction

OPTIONAL

230V AC mains adapter (NG3)
Replacement blade