KBW-01

intercable TOOLS

CABLE BENDING TOOL

ALL YOU NEED TO BEND AND STRAIGHTEN LOW AND MEDIUM CABLES UP TO Ø78MM

100% MADE IN ITALY

PATENT PENDING

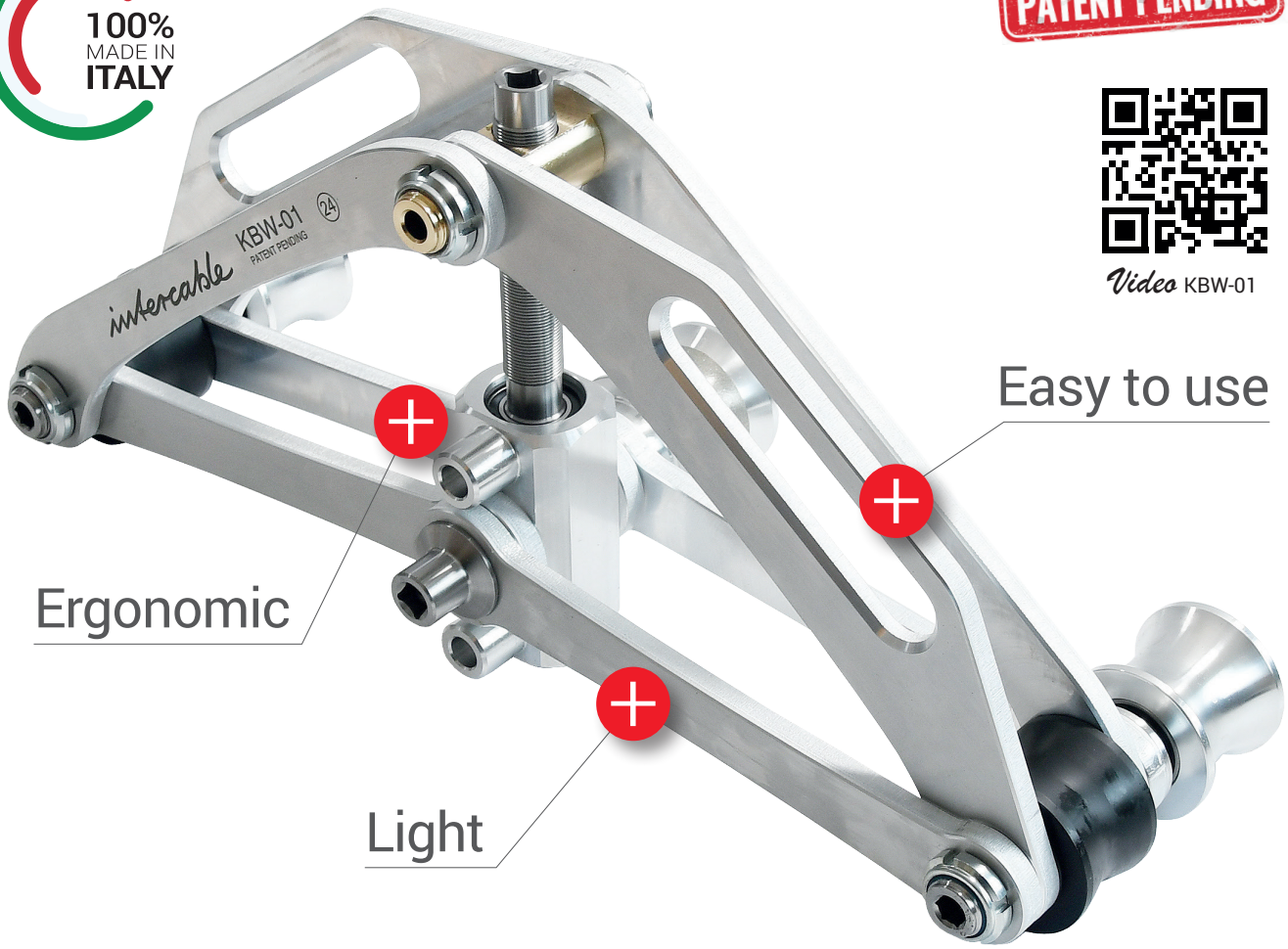

Video KBW-01

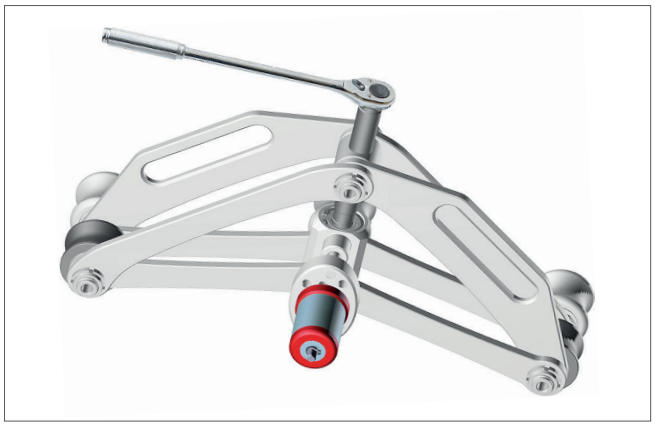

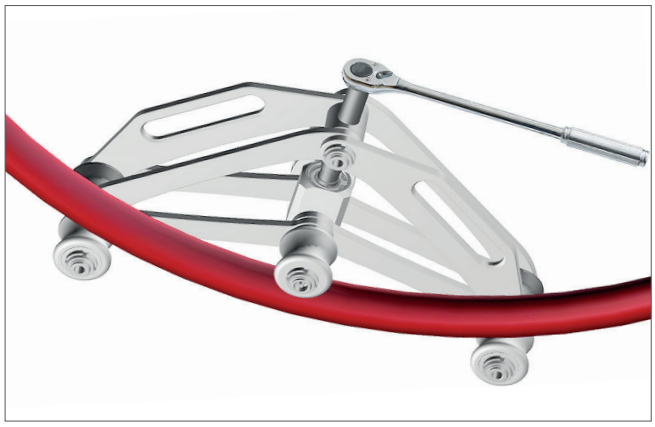

www.intercable-tools.com

KBW-01

intercable TOOLS

TECHNICAL CHARACTERISTICS

PATENT PENDING

The bending tool KBW-01 is suitable for bending low and medium voltage cables up to Ø78mm.

- Spindle made of high-alloy steel with nickel-plated surface treatment.
- Tabs made of high-strength aluminum.
- Rollers made of aluminum, the middle roller with diamond coating.
- Strong support rollers.
- Feed through driven central roller.
- ½" connection on spindle for ratchet.
- ½" connection opposite central roller for DMVI95.

- Dimensions/Tools: ..... 211x268x588 mm
- Weight/Tool: ..... 9,00 kg



SET EQUIPMENT & ACCESSORIES

Set:
- Cable bending tool KBW-01
- Retractable straightner tool KRBW-01
- Set torque amplifier DMVI95
- Ratchet 380mm ½"
- Transport case for storing the tools
- Operating instructions
- Quick guide

**The full set of Intercable DMVI95 torque amplifier is included in the kit. For controlled tightening of break-away screws on screw connectors with a maximum tear-off torque of 95Nm and provided with different Male hex wrenches and Sockets.



Approved by utilities to operate even in narrow spaces.

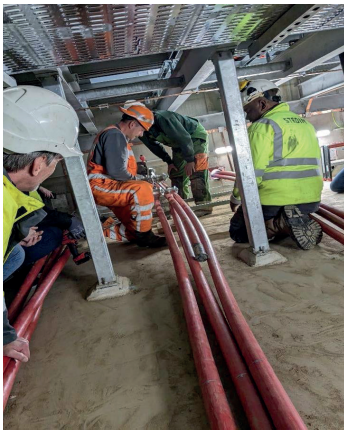

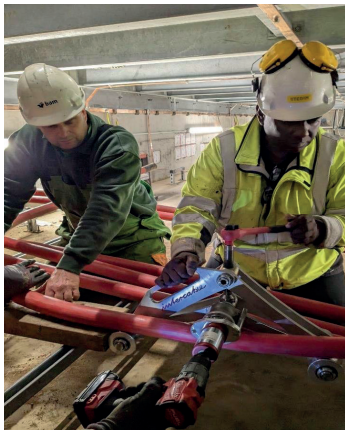

Intercable Bending Tool has been awarded by the Dutch utility ENEXIS in 2024



www.intercable-tools.com