Bending tool KBW-01

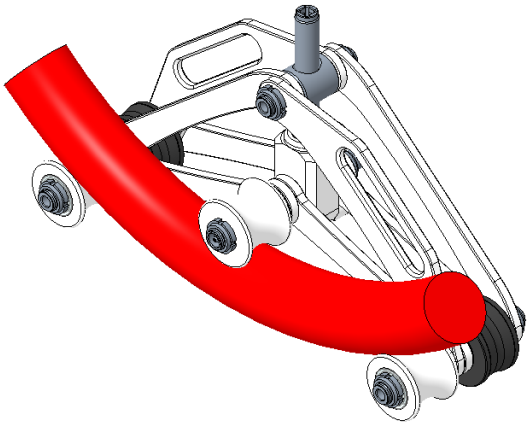

Operating manual

Please read the operating manual carefully before attempting to operate this product. If anything is unclear, please contact our nearest customer service center (see last page for details).
The content of this document may not be reproduced, transmitted, or distributed by any means, in whole or in part, without the prior written consent of Intercable.
Only the German version is valid as the original operating manual. Versions in any other languages should be regarded as translations of the original operating manual.
The manufacturer assumes no responsibility for translation errors.

Intended Use
The bending tool KBW-01 is suitable for bending low and medium voltage cables up to Ø78mm.

Technical Data:

Cable diameter max:	Ø78mm
Weight:	10,5kg
Dimensions:	585mm x 345mm x 225mm

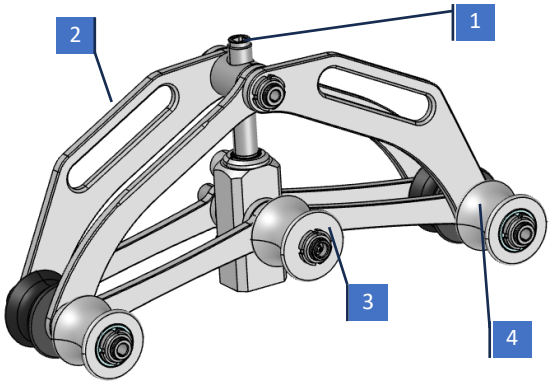

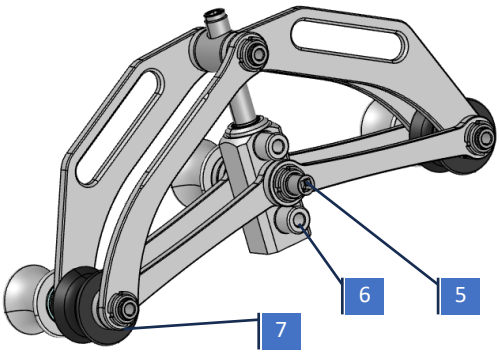

Tool description:

1. ½" connection for reversible ratchet
2. Handles
3. Feed roller
4. Bending rollers
5. ½" connection for DMVI95
6. Adapter for rods DMVI95
7. Support rollers

KBW-01

Handling:

1. Mark the cable (length of straight connector + length of bending radius) Please refer to table x for the length of the bending radius.



2. Screw the spindle all the way back

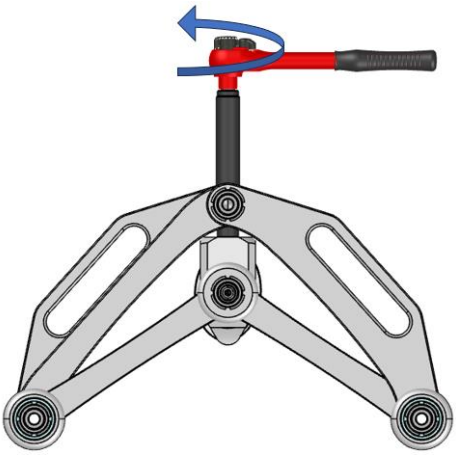

3. Insert the cable and screw the middle wheel up to the cable

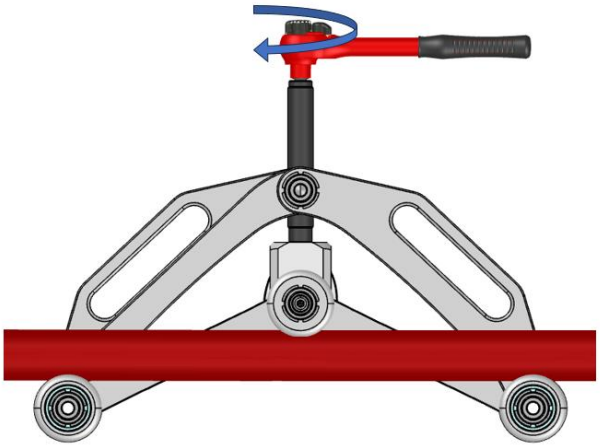

4. Connect the DMVI95 on the other side. The DMVI95 can be driven with any cordless screwdriver.

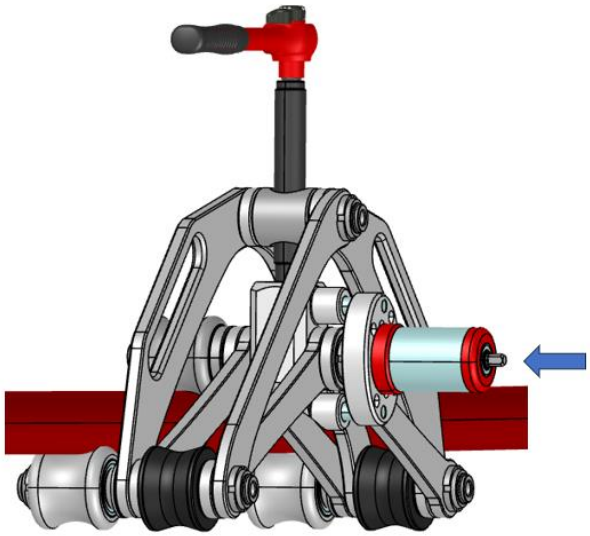

5. Bending process: Place the bending tool between the markings, tighten the spindle by approx. 1 turn and move the middle roller to the A mark with the DMVI95.
Then move from mark A to mark B and tighten the spindle again by approx. 1 turn between the markings.
Repeat this process until the bending angle of 90° is reached.

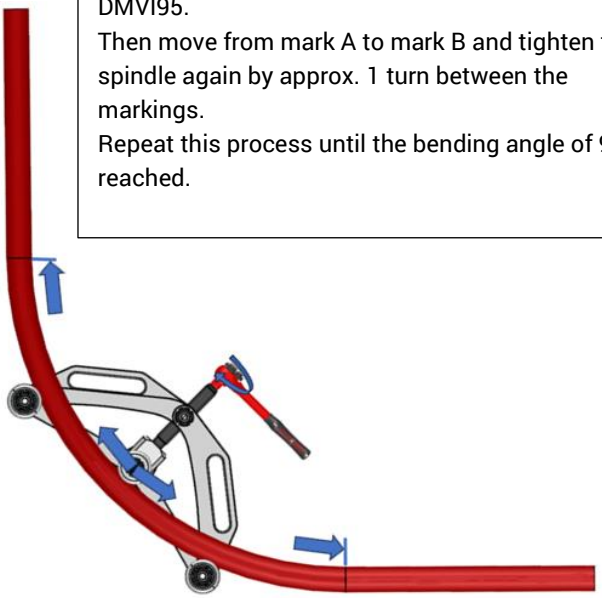

6. Screw the spindle back again and remove the cable.

KBW-01

Table of cable bending radius with corresponding marking length:

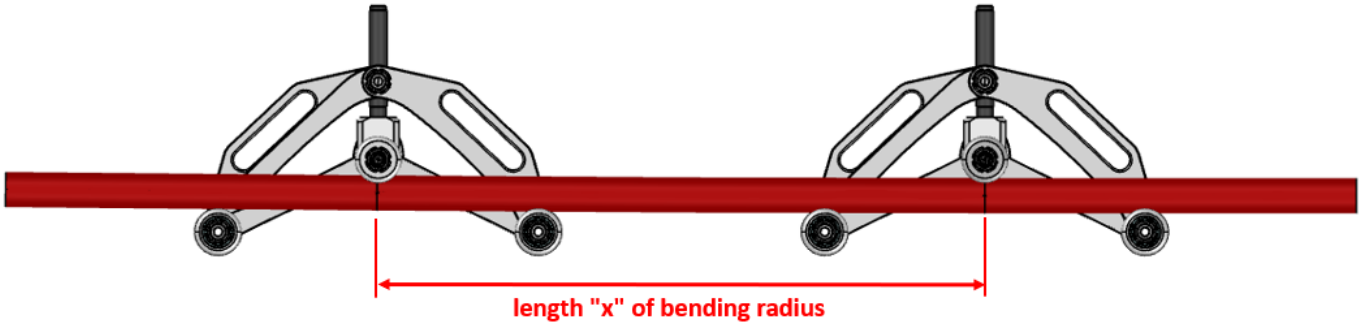

bending radius [mm]	marking length X [mm]
400	628
410	644
420	660
430	675
440	691
450	707
460	723
470	738
480	754
490	770
500	785
510	801
520	817
530	833
540	848
550	864
560	880
570	895
580	911
590	927
600	942
610	958
620	974
630	990
640	1005
650	1021
660	1037
670	1052
680	1068
690	1084
700	1100
710	1115
720	1131
730	1147
740	1162
750	1178

bending radius [mm]	marking length X [mm]
760	1194
770	1210
780	1225
790	1241
800	1257
810	1272
820	1288
830	1304
840	1319
850	1335
860	1351
870	1367
880	1382
890	1398
900	1414
910	1429
920	1445
930	1461
940	1477
950	1492
960	1508
970	1524
980	1539
990	1555
1000	1571
1010	1587
1020	1602
1030	1618
1040	1634
1050	1649
1060	1665
1070	1681
1080	1696
1090	1712
1100	1728
1110	1744

KBW-01

Symbols:


Hand injury warning. Hand injuries can occur due to the closing movement of the device. Do not reach into the danger area of the tool.


Read the operating manual and safety instructions before use.


Minors must not be allowed to use the tool. Use is reserved for qualified specialists.

Spare parts:

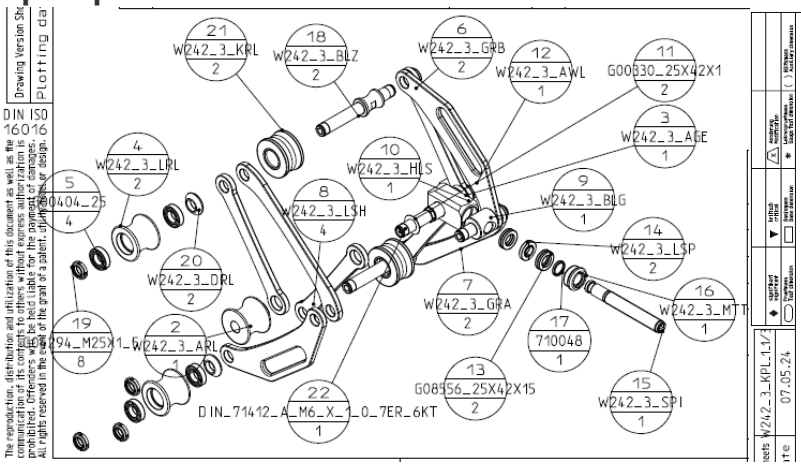

Pos	Artikel-Nr.
1	W242_3_KPL
2	W242_3_ARL
3	W242_3_AGE
4	W242_3_LRL
5	G00404_25
6	W242_3_GRB
7	W242_3_GRA
8	W242_3_LSH
9	W242_3_BLG
10	W242_3_HLS
11	G00330_25X42X1
12	W242_3_AWL
13	G08556_25X42X15
14	W242_3_LSP
15	W242_3_SPI
16	W242_3_MTT
17	710048
18	W242_3_BLZ
19	G04294_M25X1_5
20	W242_3_DRL
21	W242_3_KRL
22	DIN_71412_A_M6_X_1_0_7ER_6KT

Safety information:


: Danger of getting trapped between the cable and the rollers.
Carry out the bending process step by step so that the cable insulation is not damaged.

Work area safety

Keep your work area clean and well lit (> 400lux).
Cluttered and dark work areas can lead to accidents.
Keep children and other persons away while using the power tool. Distractions can cause you to lose control of the tool.
Use this device only for its intended purpose.


The tool may only be operated by specialists (aged > 16); this operating manual must be kept accessible at all times during the entire service life of the device.
The operator must:

- have read and understood the operating manual and the safety instructions;
- ensure that the technical performance specifications are observed;
- make sure that no persons are located in the danger area of the tool;
- examine the tool for damage and defects before use. Use of the tool is strictly prohibited in the event of any identified defects or damage.

KBW-01

Safety of persons

Stay alert, pay attention to what you are doing and use good common sense when operating an tool. Do not use tools when you are tired or under the influence of drugs, alcohol, or medication. When using an tool, a moment of carelessness can result in serious injury.
Wear personal protective equipment, and always wear safety goggles. Protective equipment, such as a dust mask, non-skid safety shoes, a safety helmet or hearing protection, depending on the type and use of the tool, will reduce the risk of personal injuries.

Avoid abnormal posture. Ensure a secure footing and maintain balance at all times. This will allow you to better control the tool in unexpected situations.

Never assume that you are safe enough and disregard the safety rules for tools, even if you are familiar with the tool after using it many times. Carelessness may lead to serious injury within milliseconds.
Never reach into the work area of the tool head, unless you are sure that the tool has been shut down safely!
Keep other persons, especially strangers, away from your work area while working with the tool!
The tool may be operated by one person only.
Remove any bystanders from the danger zone of the tool.
When you work at height, make sure to secure the tool sufficiently against falling.
Do not overload the tool. Use tools that are suitable for your task. By using the right tool, your work will be better and safer within the indicated performance range.
Do not use a tool whose components are defective.
Keep the unused tool out of the reach of children. Prevent any use of the tool by persons who are unfamiliar with it or haven't read these instructions.
Maintain tools carefully. Check whether all movable parts run correctly and are not stuck, whether any parts are broken or damaged to the extent that the tool will no longer operate correctly. Have damaged parts repaired before using the tool. Many accidents are caused by poorly maintained tools.
Keep the handles and handle surfaces dry, clean and free from oil and grease.
Slippery handles and handle surfaces prevent safe operation and control of the tool in unexpected situations.

Service:

Have your tool serviced by a qualified repair person using only original replacement parts. This will ensure that the safety of the tool is maintained.
The tool may only be opened by the manufacturer or authorized persons.

Transport:

To protect your tool against damage, make sure to clean it after every use. Store the tool in the transport case and make sure the case is securely closed.
The tool must be transported only in its closed transport case by physically fit persons.

Warranty:

Any defect in the product, which must be identified at the time of delivery, must be indicated to the manufacturer in writing within 8 days from the date of delivery, including the transport document and a concrete description of the nature of the defects.
In the event of hidden defects, a complaint must be made within 8 days from the detection of the defect and before the end of one year from receipt of the product.
Intercable disclaims liability for any defects that are not brought to our attention within the above-mentioned deadlines. The warranty does not cover damage resulting from improper handling, poor maintenance, failure to use original spare parts, opening of the equipment by unauthorized personnel. In the event of repairs, the warranty is only applied to the replaced parts; repairs will not lead to an extension of the warranty period for the entire product.