PRODUCT DATA SHEET

Torque amplifier DMVI65

Mod. Nr.: DMVI65 **Item Nr.:** 108553
Date: 22,03

TECHNOLOGY IS OUR PASSION

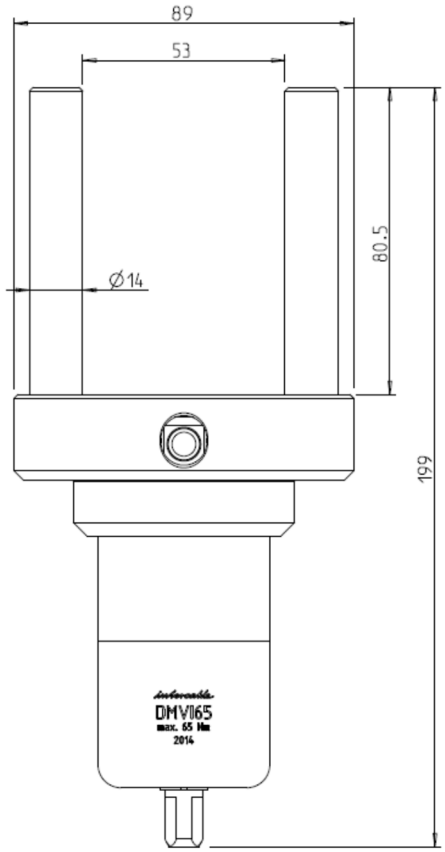

APPLICATION

The torque multiplier DMVI65 suitable for gentle tear of screw with conventional cordless screwdrivers.

MATERIALS

Functional parts made of high-alloy steel.
Aluminium housing with anodized surface.
Disk of aluminium with anodized surface.
Rods of high alloy steel with galvanized surface.

TECHNICAL CHARACTERISTICS:

Triangle receptacle for receiving three-jaw chuck from conventional cordless screwdrivers.
½" square inserts for receiving standard sockets and Allen.
Ratio 1:24.
Spacing: 40mm or 53mm.
Length bars: 80,5 mm.
Maximum output torque of 65Nm.
Minimal driving torque of 3.5 Nm.
Protection: IP54.
Attention: Not for impact driver.

LABELING

Brand	intercable
Model number	DMVI65
Max. torque	max. 65Nm
Year of production	YYYY

INTERCABLE Tools srl - Via Campi della Rienza, 21 - 39031 Brunico - Tel. +39 0474 571 700 - Fax +39 0474 555 511 - info@intercable.it

PRODUCT DATA SHEET

Torque amplifier DMVI65

Mod. Nr.: DMVI65 **Item Nr.:** 108553
Date: 22,03

intercable
TECHNOLOGY IS OUR PASSION

PACKING AND WEIGHTS

Rigid (370 x 240 x 120mm) case to contain the torque amplifier, allen key, instruction of use and inserts.

Torque amplifier DMVI65	ca. 1050gr.
Set torque amplifier DMVI65	ca. 2600gr.

SET

Torque amplifier DMVI65
Instruction for use
Allen key S5
Rigid case with foam
Male hex wrench ½ 5
Male hex wrench ½ 6
Male hex wrench ½ 8
Male hex wrench ½ 10
Socket ½ 10 mm
Socket ½ 13 mm
Socket ½ 14 mm
Socket ½ 17 mm
Socket ½ 19 mm
Socket ½ 22 mm
Socket ½ 24 mm