KNIPEX Quality – Made in Germany

Operating instructions

78 03 150
78 61 150
78 09 LE

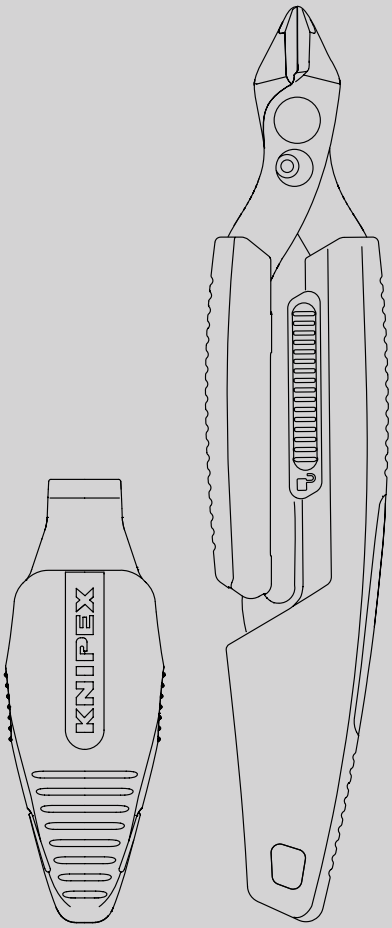

EN Slim Knips and Holster

Precision pliers for the finest cutting work and holster for storing pliers

CONTENTS

1	General	3
1.1	Notes on operating instructions	3
1.2	Symbols Used	3
1.3	Copyright	3
1.4	Guarantee and warranty	3
2	Safety	4
2.1	Intended Use	4
3	Design and Function	6
3.1	Design	6
3.2	Function	6
4	Operation	7
4.1	Ergonomic basic posture for standard applications	7
4.2	Thumb operation for working in confined spaces	7
4.3	Tweezers grip for precise cutting work	8
4.4	Manual retensioning and removal of cable ties	9
4.5	Attaching the Tether	12
4.6	Attaching the Tethered Tool System	13
4.7	Use of the holster	15
5	Maintenance	16
6	Technical data	16
7	Disposal	16

1 General

1.1 Notes on operating instructions

These operating instructions are designed to enable you to use your tool safely and efficiently.
The tool may only be used if it is in technically perfect condition.
As a consequence of technical developments, the illustrations and descriptions contained in these operating instructions may differ slightly from the tool actually delivered.
We do not accept any liability for damage caused by failure to observe these operating instructions.

1.2 Symbols used

All safety instructions in these operating instructions are indicated by corresponding symbols. The signal words at the beginning of each safety instruction express the extent of the Hazard.



Danger!

Level 1 risk source

This combination of symbol and signal word indicates an imminently hazardous situation that will result in death or serious injury if not avoided.



Warning!

Level 2 risk source

This combination of symbol and signal word indicates a possibly hazardous situation that may result in death or serious injury if not avoided.



Caution!

Level 3 risk source

This combination of symbol and signal word stands for important information that will assist in preventing damage to property or the environment.

1.3 Copyright

These operating instructions and all documentation supplied with this tool are protected by copyright and remain the property of KNIPEX.
The reprinting of these instructions, even in extract form, is only permitted with the written consent of C. Gustav Putsch KG.

1.4 Guarantee and warranty

The manufacturer grants a statutory warranty in accordance with the current sales and delivery conditions. No further warranties or assurances are granted.
Within the warranty period, the warranty covers the rectification of all defects that can be traced back to material faults or manufacturing errors. Wearing parts are excluded from the warranty.
The repair or replacement of a tool shall not result in an extension of the warranty period. Tools shall only be repaired or replaced with „as new" parts, whose function corresponds to that of the old parts. All defective and hence replaced parts are the property of the manufacturer.

Warranty claims shall expire in particular if:

- Damage is caused through improper operation, use for purposes other than those specified by the manufacturer, or poor maintenance.
- Repairs or conversions are carried out by unauthorized persons.
- Original accessories or spare parts from KNIPEX are not used.
- Defective components are not repaired immediately to minimise the extent of the damage and so as not to impair the safety of the tool (obligation to repair).

For the rest, reference is made to the liability and warranty regulations of the current sales and delivery conditions.

2 Safety

2.1 Intended use

The tool is intended for the following uses:

- Cutting plastic (up to 3 mm thick/diameter)
- Cutting cable ties (up to 7.6 mm wide)
- Cutting copper (single-wire up to 1.6 mm diameter or 1.3 mm for type 78 03 150)
- Cutting copper (fine-stranded up to 4 mm^2)

The tool is not approved for the following applications:

- Cutting harder materials than specified

The holster is compatible with the following tools:

Super Knips types

- 78 03 125 (ESD)
- 78 13 125 (ESD)
- 78 23 125 (ESD)
- 78 61 125 (ESD)
- 78 71 125 (ESD)
- 78 81 125 (ESD)
- 78 91 125 (ESD)

Slim Knips types

- 78 03 150
- 78 61 150

The holster is not compatible with any other tools.

The holster's clamp bracket is compatible with belts up to 40 mm wide and many Tool Bags within tool transport systems.

JAny use beyond the intended purpose or any unauthorized modification shall be considered improper. The operator shall be liable for damages resulting from improper use.

Intended use also includes adhering to these operating instructions. They must be read in full before use.

Danger!



Danger of death due to electric current!

Disconnect all cables from the power supply before cutting!
Only work on cables and wires that are free of tension!

Warning!



Warning: Sharp blades!

Handling sharp blades is dangerous. Therefore, handle your tools with care when performing any work.

Warning!



Wear safety goggles.

Wear eye protection when using the tool!

Warning!



Danger from sharp blades!

Close the pliers and always secure them with the retainer when not in use or when storing.

Warning!



Danger from falling objects!

Secure your tools with KNIPEX Tethered Tools when working at heights.

3 Design and function

3.1 Design

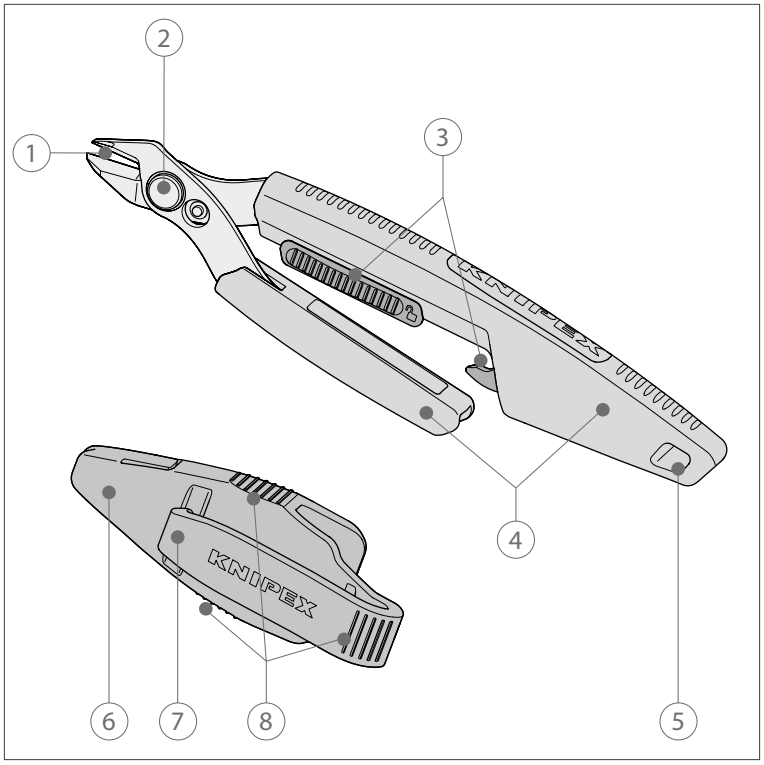

Slim Knips and holster design

1 Cutting
2 Joint
3 Retainer with closing limiter
4 Handles
5 Tether attachment point for attaching a fall protection device
6 Holster
7 Clamp bracket for attaching to a belt or retaining tabs on tool transport systems
8 Grip zones for pulling out the pliers

3.2 Function

The precision pliers are designed for the finest cutting work on single and fine-stranded copper conductors, plastic parts and cable ties. They guarantee clean cuts with minimal effort and are specially optimised for the assembly and disassembly of cable ties, e.g. for flush cutting of protruding ends. The space-saving pen shape allows for precise work with a delicate touch and a good view of the workpiece – even in tight and deep spaces. The holster is used for safe storage and quick access to the precision pliers. The clamp bracket is compatible with belts up to 40 mm wide and many Tool Bags **within** tool transport systems.

4 Operation

The Slim Knips can be handled in different ways depending on the conditions of use.

Each handling method is tailored to specific applications and helps you achieve optimum control and transmission of force. The three recommended operating positions are shown below, along with explanations of typical areas of application.

4.1 Ergonomic basic posture for standard applications

1. Open the pliers by pushing the retainer (3) backwards.
2. Hold the pliers as shown in the illustration and make the desired cut.

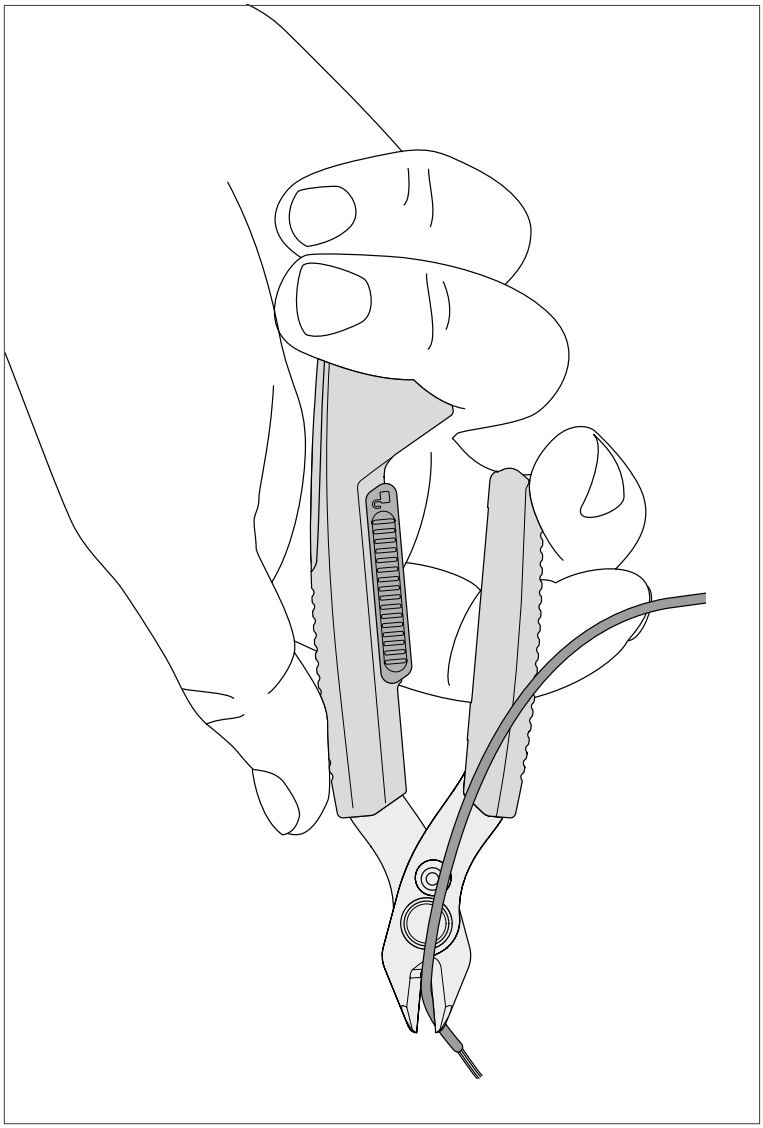

Ergonomic basic posture

4.2 Thumb operation for working in confined spaces

1. Open the pliers by pushing the retainer (3) backwards.
2. Hold the pliers in your hand as shown in the illustration. Thanks to the special handle design, the pliers can be gripped very far back and still held securely in the hand. This makes cutting in confined spaces easier.
3. Now make the desired cut.

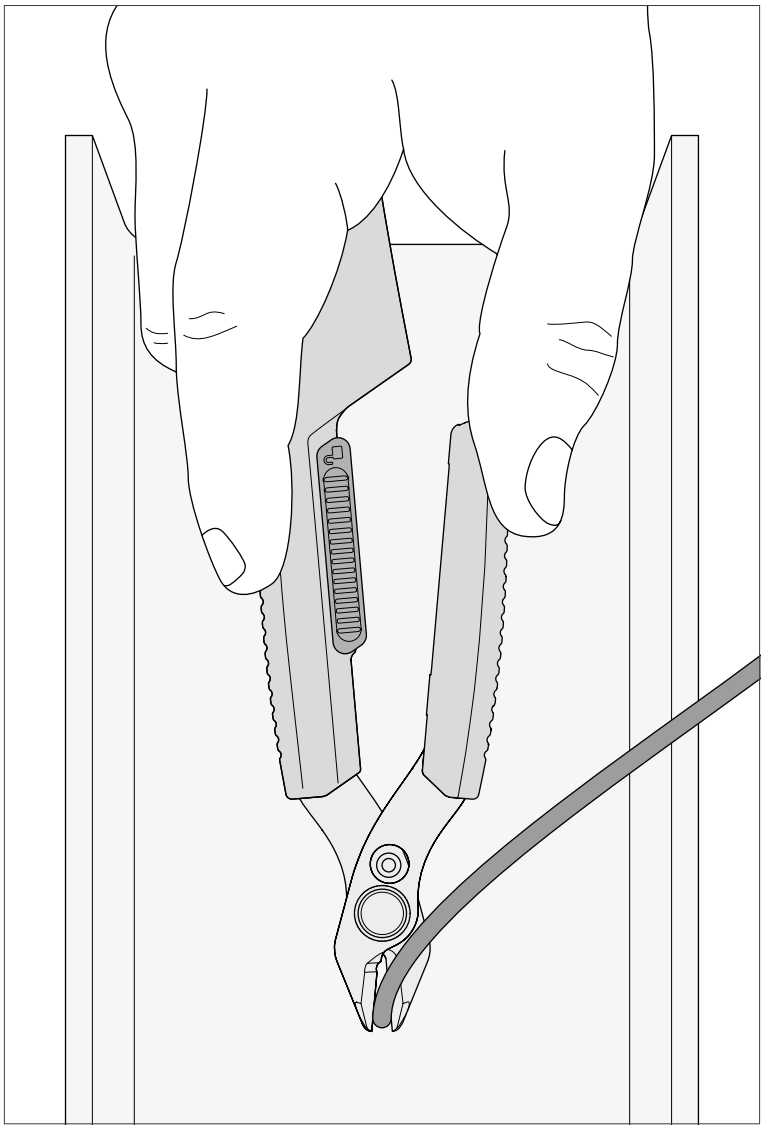

Thumb guide for the pliers

4.3 Tweezers grip for precise cutting work

1. Open the pliers by pushing the retainer (3) backwards.
2. Hold the pliers in your hand as shown in the illustration. This allows you to hold and guide the pliers very precisely. If necessary, you can rest the heel of your hand on the pliers to stabilise your hand.
3. Now make the desired cut.

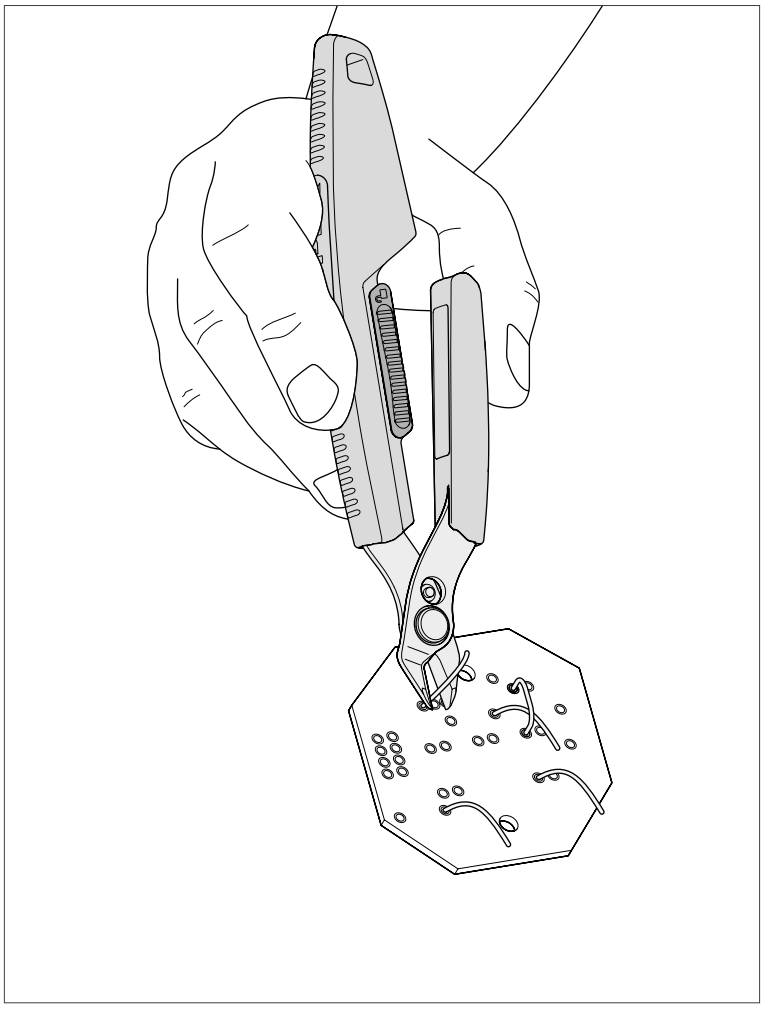

Tweezers grip

4.4 Manual retensioning and removal of cable ties

The Slim Knips is ideal for manually retightening and dismantling cable ties:

- A closing limiter reduces the risk of accidentally cutting off the end of the cable tie when retightening.
- The large opening width allows cable ties up to 7.6 mm wide to be cut crosswise.

4.4.1 Manual retensioning and removal of cable ties

1. Open the pliers by pushing the retainer (3) backwards.
2. Push the retainer all the way forward over the resistance to activate the closing limiter. The pliers can now no longer be closed completely. This reduces the risk of accidentally cutting through the end of the cable tie when retightening.
3. Retighten the cable tie in a controlled manner as shown in the illustration.
   Tip: For wide cable ties, always insert the end of the cable tie as far forward as possible (at the tip of the cutting edge), as the gap is larger there.

Note:
In the event of overload, the closing limiter is automatically triggered, preventing possible breakage.

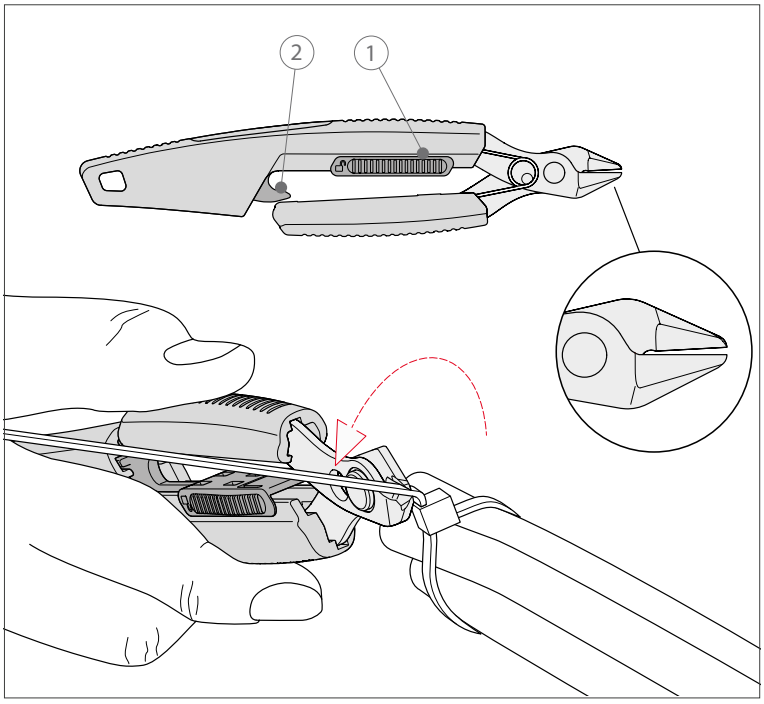

Tighten cable ties in a controlled manner

4.4.2 Removing cable ties

1. Open the pliers by pushing the retainer (3) backwards.
2. Hold the pliers as shown in the illustration and cut the cable tie crosswise.

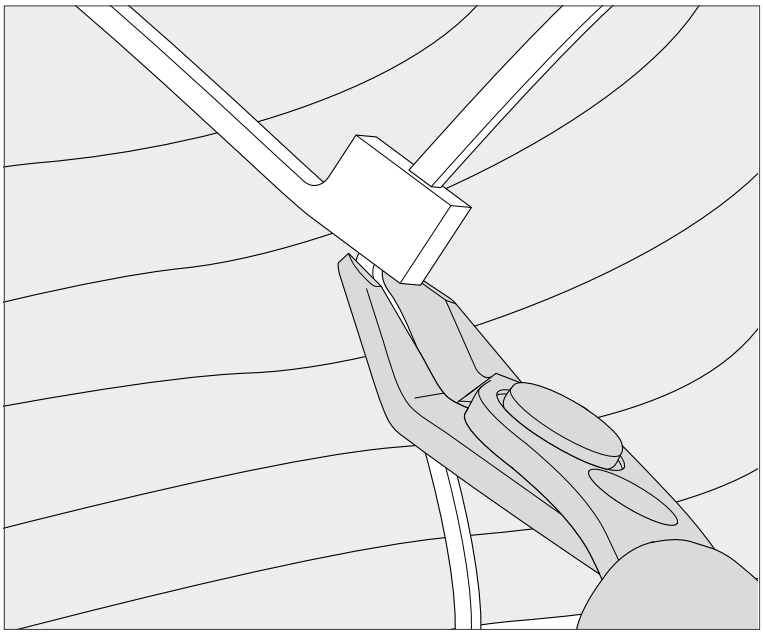

Cut the cable tie crosswise

Danger!

Danger of death due to electric current!

Before cutting cable ties, make absolutely sure that all cables in the cable bundle are disconnected from the power supply!

Caution!

Possible damage to property!

Before cutting the cable tie, check that no cables can be damaged by the tip of the pliers!

4.5 Attaching the tether

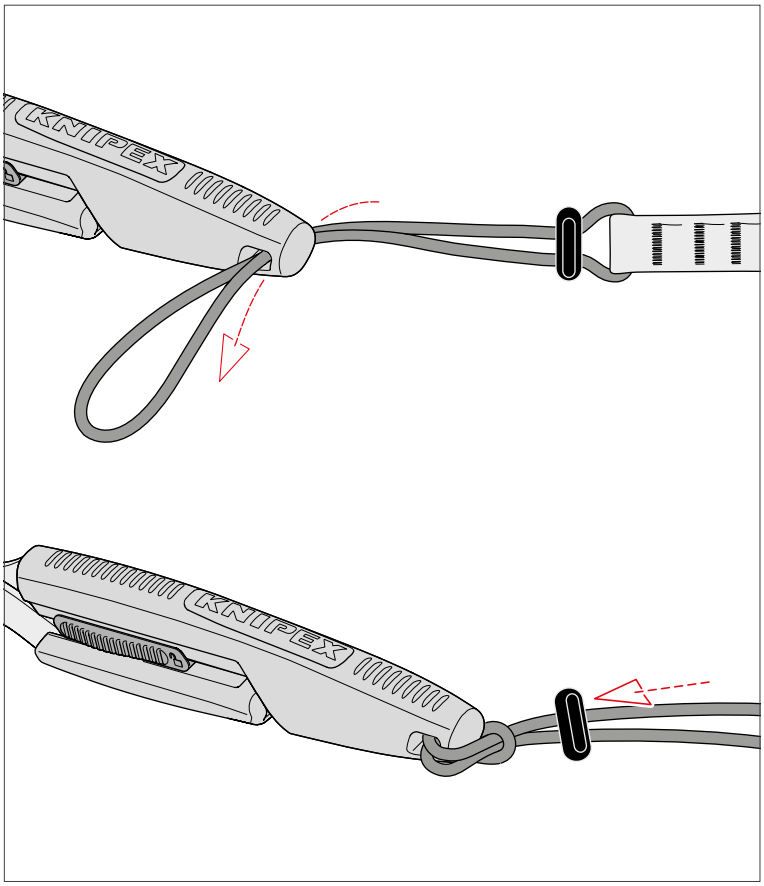

Attaching the tether

1. Insert the end of the loop through the opening of the tether attachment point.
2. Insert the carabiner end of the tether or adapter strap through the loop and pull it tight to create a secure connection.
3. Press the rope stopper firmly onto the cinch.

4.6 Attaching the Tethered Tool System

The holster should be attached to the belt, tool bag or designated mounting rail so that the pliers are easily accessible without restricting movement.

Caution!

Danger from falling objects!

The holster is not suitable for working at height as it cannot be attached to a tether.

4.6.1 Attaching the holster to a belt

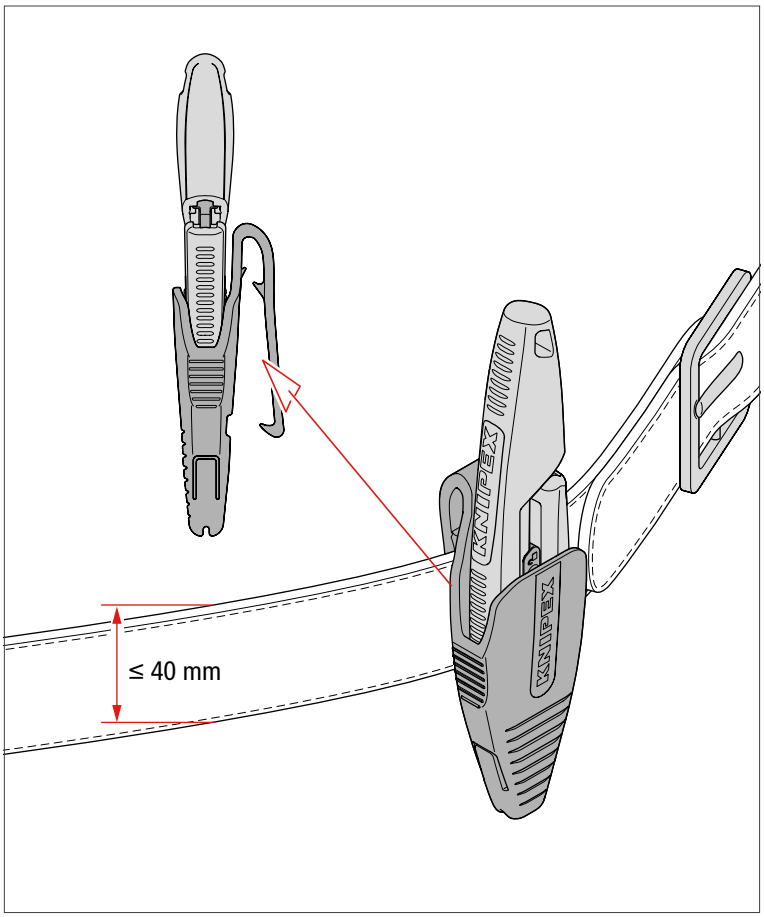

Attaching the holster to the belt

Note:

The holster must only be attached with the opening facing upwards!

1. Slide the clamping bracket of the holster completely over the belt until it clicks securely into place (in the first position).
2. After sliding the holster on, pull the holster in the opposite direction to ensure that it is securely fastened.
3. Close and lock the pliers.
4. Insert the pliers into the holster until you feel it click into place, securing it firmly.

4.6.2 Attaching the holster to a tool pouch

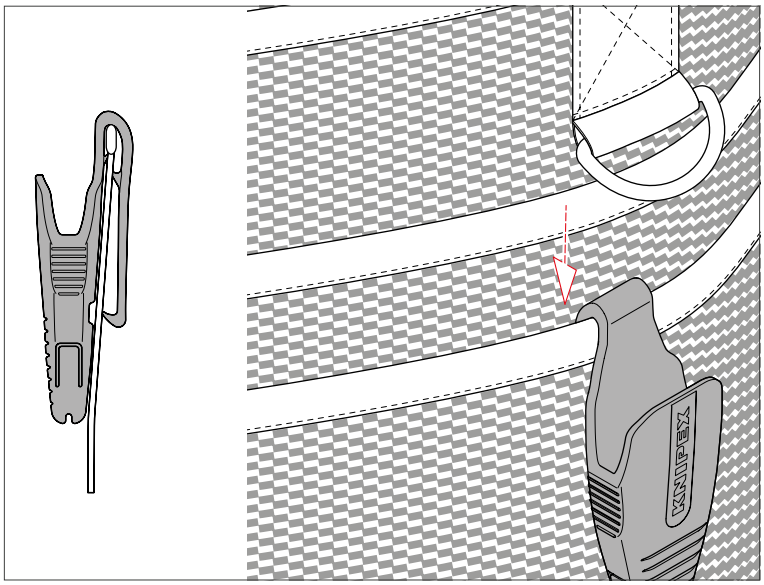

Attaching holsters to the waistband of Tool Bags

1. Slide the holster's clamp bracket completely over the waistband of the Tool Bag until it clicks securely into place (in the second position).
2. After sliding the holster on, pull the holster in the opposite direction to ensure that it is securely fastened.

4.6.3 Attaching the Tethered Tool System

1. Remove the pliers before loosening the holster so that they do not fall out.
2. Pull the clamp bracket slightly backwards and pull the holster upwards to remove it.

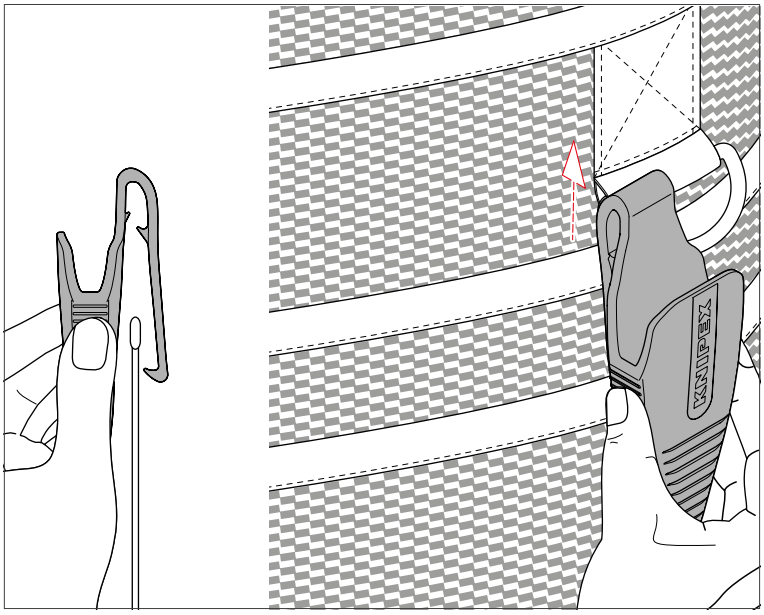

Releasing the holster

4.7 Use of the holster

4.7.1 Inserting the pliers into the holster

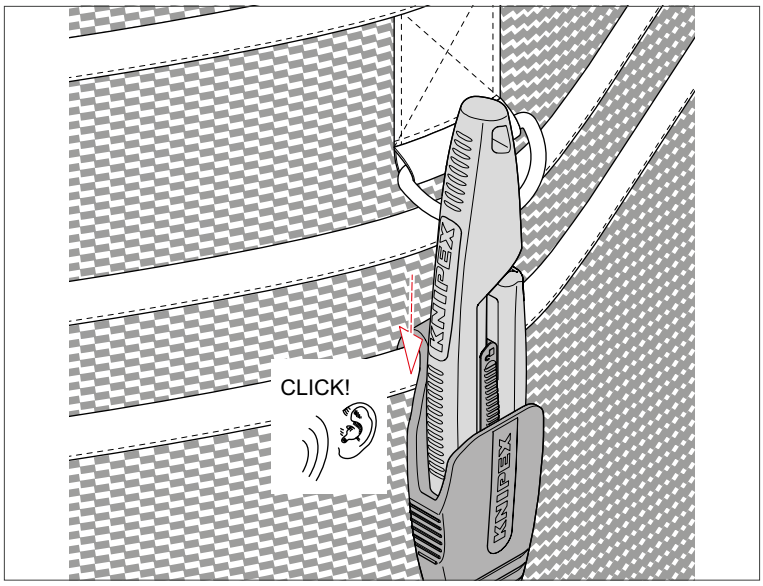

Placing the pliers in the holster for storage

1. Close and lock the pliers.
2. Insert the pliers into the holster until you feel **them click** into place, securing them firmly.

4.7.2 Removing the pliers from the holster

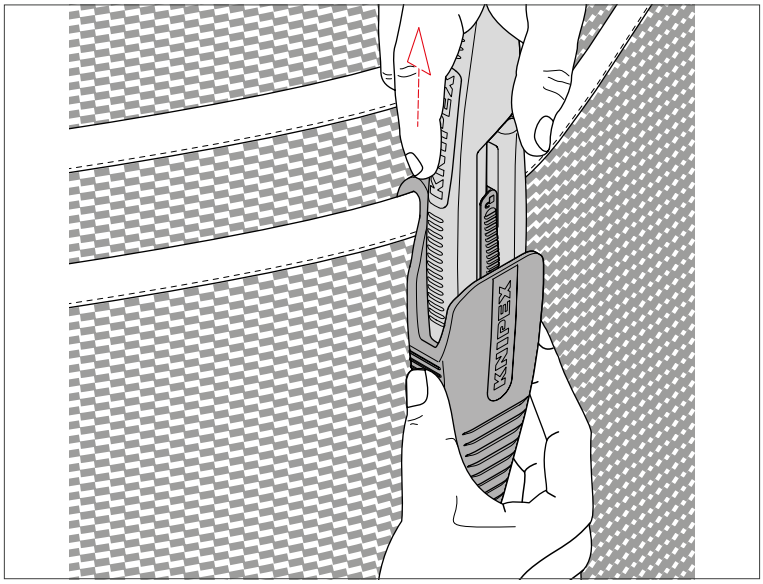

Removing the pliers from the holster

1. Hold the holster by the grip areas.
2. Carefully pull the pliers out of the holster. This will prevent excessive strain on the clamping bracket and prevent the holster from coming loose.

5 Maintenance

Oil the joint of the tool regularly.

6 Technical data

Technical data	Unit	Slim Knips		Holster
Item number	–	78 03 150	78 61 150	78 09 LE
Length	mm	158	158	103
Width	mm	32	32	38
Weight approx.	g	50	50	30
Features	–	Cutting edge without bevel, with integrated retainer and opening spring		of impact-resistant plastic
Application	–	Single-strand and fine-stranded copper conductors, plastic parts, and cable ties		Storage of Super Knips and Slim Knips

7 Disposal

Dispose of the dismantled components of the product in accordance with the relevant regulations.

KNIPEX-Werk
C. Gustav Putsch KG

42337 Wuppertal

Tel.: +49 202 – 47 94-0
Fax: +49 202 – 47 74 94

info@knipex.com
www.knipex.com