Product Information

26 11 200

Snipe Nose Side Cutting Pliers

(Stork Beak Pliers)

- Half-round, long, tapered jaws
- Distortion-tolerant, elastic precision tips
- Suitable for finer gripping and cutting work, also on easy and semi-difficult to reach areas

- With cutting edges for soft, medium-hard and hard wire
- Cutting edges additionally induction-hardened, cutting edge hardness approx. 61 HRC



General	
Part No.	26 11 200
EAN	4003773022824
pliers	black atramentized
head	polished
handles	plastic coated
Weight	170 g
Dimensions	200 x 51 x 13 mm
Standard	DIN ISO 5745
REACH compliant	does not contain SVHC
RoHS compliant	not applicable

Technical details	
Cutting capacities medium hard wire (diameter)	Ø 3.2 mm
Cutting capacities hard wire (diameter)	Ø 2.2 mm
Jaw thickness (joint) (T1)	9.5 mm
Tips width (W4)	3.0 mm
Tips thickness (T2)	2.5 mm
Jaw length (L3)	73.0 mm
Head width (W3)	18 mm

Technical changes and errors excepted





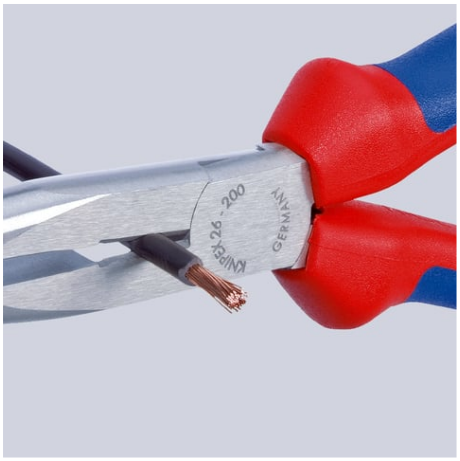

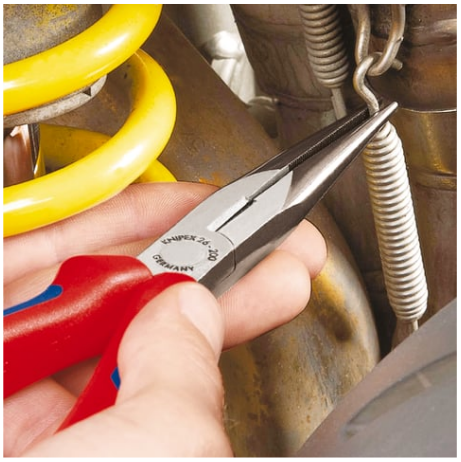

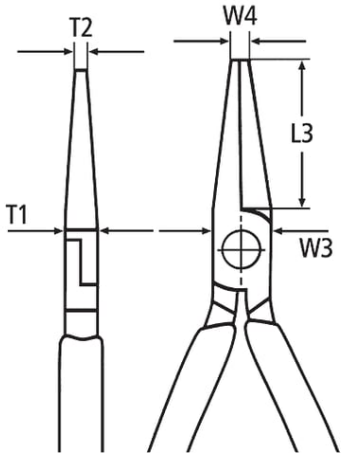
T2
W4
L3
T1
W3