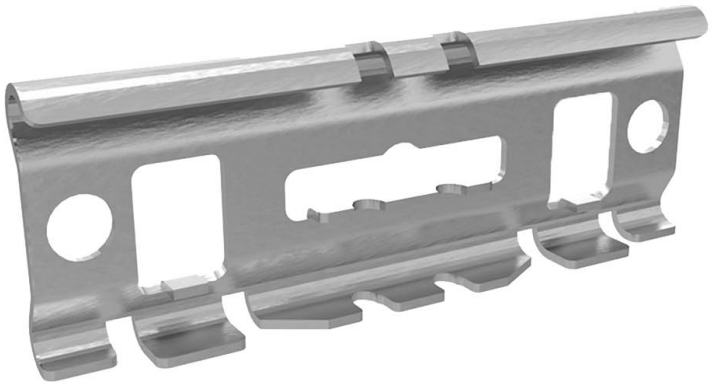

Wire mesh tray splice

E-no — MP-no 730Z4

Splice piece for wire mesh trays. Simple assembly by folding the splice over the side of the ladder and then locking it with a polygrip or similar over the longitudinal rungs. Made of a zinc-magnesium alloy (25 µm) and suitable for environmental class max C4. The advantage of this material is that it self-heals, for example when cut, and is a more durable alternative to traditional hot-dip galvanising. If necessary, the splice can be locked with MP bolt set M8X16 (11 156 80). This can be used for wide ladders or when you want to strengthen the splice point. There are also holes for connecting potential equalisation screws or similar.

Product details

E-no	MP-no	EAN
	730Z4	**7394333052779**

Dimensions (dxwxh)	Weight kg	Surface
110x40x10	**0.06**	**Z4**

Environment class	Package pieces	Climate impact (kgCo2e)
C4	**10**	**0.16**

