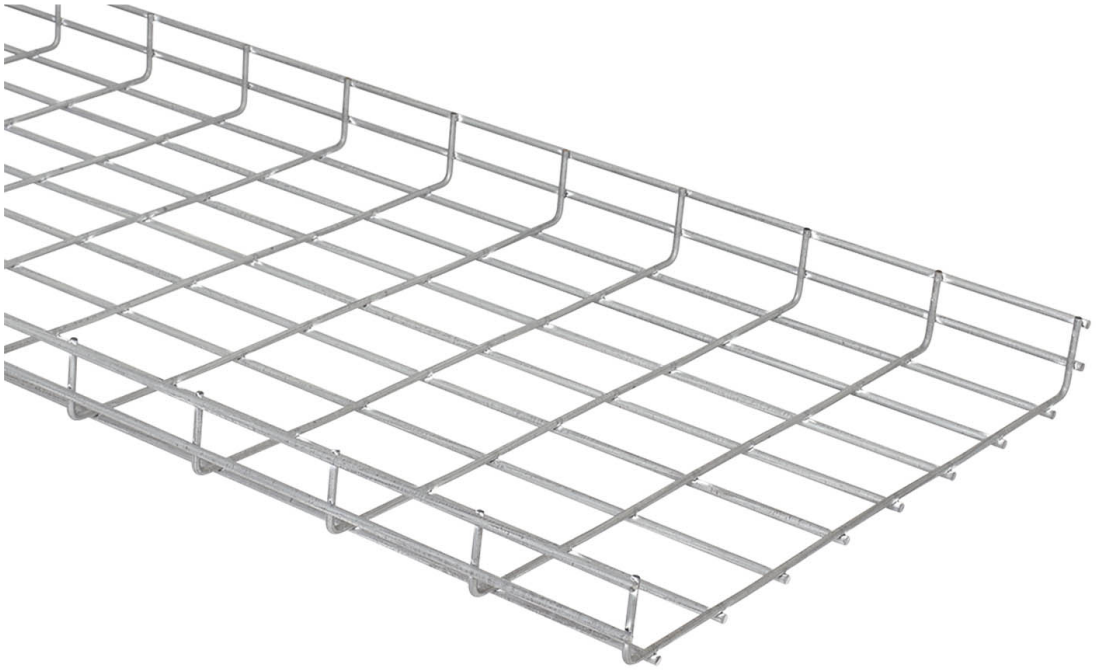

Wire mesh tray 500 mm

E-no — MP-no 726Z4

Wire mesh tray for flexible installations. The diameter of the wires is 6 mm. The wire mesh tray is made of a zinc-magnesium alloy (25 µm) and is suitable for environmental class max C4. The advantage of this material is that it self-heals, for example when cut, and is a more durable alternative to traditional hot-dip galvanising. Several of the accessories are shared with the rest of the MP range. Can be ordered in any painted colour.

Product details

E-no	MP-no	EAN
	726Z4	**7394333049779**

Dimensions (dxwxh)	Weight kg	Surface
2500x500x58	**8.86**	**Z4**

Environment class	Package pieces	Climate impact (kgCo2e)
C4	**2**	**23.92**

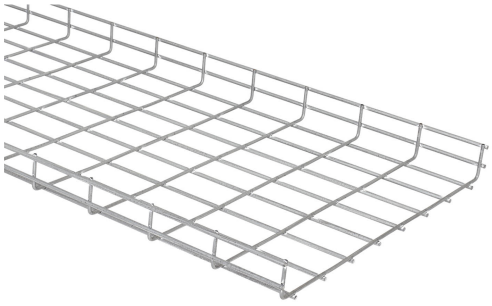

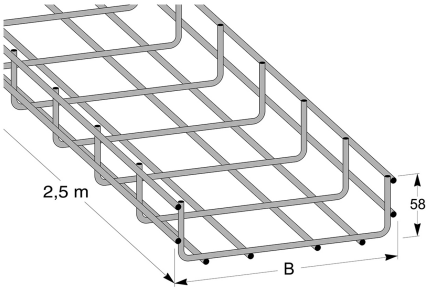

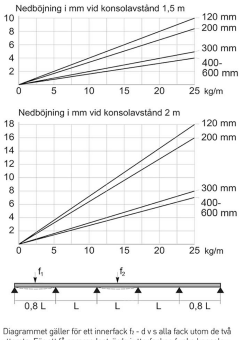

Diagrammet gäller för ett innerfack f_1 - d v s alla fack utom de två yttersta. För att få samma lastvärde i ytterfacken f_1 ska konsolavståndet vara 80 % av ett innerfack.