CK Bauhöhe 60 mm, Hart PVC /
CK 60 mm height, rigid PVC

Installationskanäle aus Hart-PVC / Installation Trunkings, rigid PVC

VDE CE Blei **RoHS konform / compliant**




60 x 60


90 x 60


110 x 60


130 x 60


150 x 60

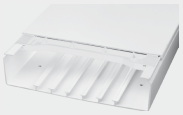
190 x 60


230 x 60

Material: Hart-PVC, schwer entflammbar, selbstverlöschend

Besondere Merkmale:

- Vorgesehen für Trennstegeinbau ab 60 x 60 mm
- Farben ähnlich: weiß RAL 9001, reinweiß RAL 9010, lichtgrau RAL 7035
- Lieferumfang: Unterteil mit Bodenlochungen (Abstand 125 mm), inkl. Deckel, Länge 2 m
- Ab 60 x 60 mm mit 4 Kabelklammern

Material: rigid PVC, hardly-inflammable, self-extinguishing

Specific Features:

- Designed for the use of dividers from 60 x 60 mm onwards
- Colors similar: white RAL 9001, pure white RAL 9010, light grey RAL 7035
- Extent of supply: base with perforated bottom (distance 125 mm), incl. cover, length 2 m
- From 60 x 60 mm onwards with 4 cable holders

Farbe Colour	Abmessungen Dimensons B x H / W x H	Länge Length	VE PU	Artikel-Nr. Article-No.	Artikel-Nr. / Article-No.			
					Außenecken Outside Corners	Innenecken Inside Corners	Flachwinkel Flat Corners	Endstücke End Caps
RAL 9001	60 x 60	2 m	24	9300	9310	9320	9340	9330
RAL 7035	60 x 60	2 m	24	9304	9314	9324	9344	9334
RAL 9010	60 x 60	2 m	24	9305	9315	9325	9345	9335
RAL 9001	90 x 60	2 m	24	9390	9350	9360	9370	9380
RAL 7035	90 x 60	2 m	24	9394	9354	9364	9374	9384
RAL 9010	90 x 60	2 m	24	9395	9355	9365	9375	9385
RAL 9001	110 x 60	2 m	16	9400	9410	9420	9440	9430
RAL 7035	110 x 60	2 m	16	9404	9414	9424	9444	9434
RAL 9010	110 x 60	2 m	16	9405	9415	9425	9445	9435
RAL 9001	130 x 60	2 m	12	9500	9510	9520	9540	9530
RAL 7035	130 x 60	2 m	12	9504	9514	9524	9544	9534
RAL 9010	130 x 60	2 m	12	9505	9515	9525	9545	9535
RAL 9001	150 x 60	2 m	12	9600	9610	9620	9640	9630
RAL 7035	150 x 60	2 m	12	9604	9614	9624	9644	9634
RAL 9010	150 x 60	2 m	12	9605	9615	9625	9645	9635
RAL 9001	190 x 60	2 m	14	9700	9710	9720	9740	9730
RAL 7035	190 x 60	2 m	14	9704	9714	9724	9744	9734
RAL 9010	190 x 60	2 m	14	9705	9715	9725	9745	9735
RAL 9001	230 x 60	2 m	8	9800	9810	9820	9840	9830
RAL 7035	230 x 60	2 m	8	9804	9814	9824	9844	9834
RAL 9010	230 x 60	2 m	8	9805	9815	9825	9845	9835

Symbolische Darstellungen:



Außenecken
Outside Corners



Innenecken
Inside Corners



Flachwinkel
Flat Corners



Endstücke
End Caps

Data Sheet Installation Trunkings CK

Tested and certificated according to: DIN EN 50085-1 and DIN EN 50085-2-1

Stand: 05.2022

The installation trunkings of type CK are made of rigid PVC by extrusion.

Characteristic:

Material:	rigid-PVC; lead-, silicon- und cadmium-free (RoHS conform)		
Operation temperature:	static:	-20°C… +60°C	
	dynamic:	-5°C… +60°C	
working temperature:	>0°C		
fire behaviour:	hard to inflame according to	DIN 4102-1	Level B1
	self-extinguishing according to	UL94	V0
	Fire load:		5,2kW/kg
Dielectric strength:	>30kV/mm		
UV resistance:	Hard PVC is conditionally UV-resistant to a certain extent, (colour changes due to UV- exposure cannot be ruled out)		
Colour:	RAL 9001 cream white RAL 9010 pure white RAL 9016 traffic white RAL 7035 light grey RAL 7016 anthracite grey RAL 8014 sepia brown		
Delivery length:	2000 mm with cover		

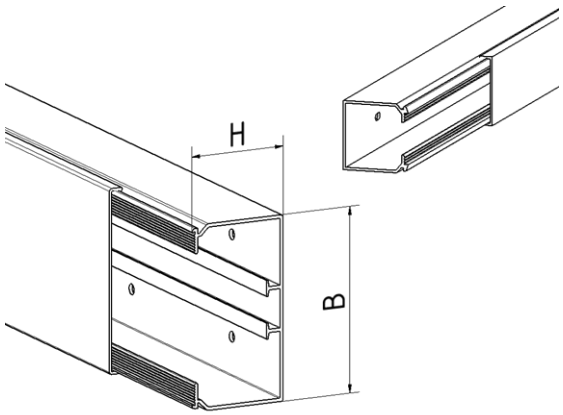

Special features:

- CK trunkings are equipped with cable clamps from 60x40 mm and floor profiles to accommodate dividers from 60x60 mm.
- For CK trunkings from 60x40 mm, molded parts are available for the following purposes Part with flexible opening angle available.
- Bottom perforations at a distance of 125 mm for fixing to fixed structure.
- Accessories and further information can be found at www.licatec.de

	Height (H)	IK-class	Available width (B)						
CK	10	IK 06	20*						
	15	IK 06	15*	30*					
	18	IK 06	18*						
	25	IK 08	40*						
	30	IK 08	30*						
	40	IK 08	40*	60*	100				
	60	IK 08	60*	90*	110*	130*	150*	190*	230*

*…VDE certificated

Installation Trunkings CK

RoHS konform