Glamox

C77-P125×1200 WH 30/70 4000 DALI 830 PRE C2.5 SM

The C77-P is a series of slender pendant luminaires with rounded corners and an industrial appearance. The futuristic metal housing with arrays of specially designed reflector optics ensures full glare control and comfortable light.



Item No.	C77099268
GTIN	7054130992684
Stock status code	A

Technical specifications

Mounting	
Product Mounting	Pendant

General	
Product shape	Rectangular
EPD (Environmental Product Declaration)	true

LMS System	
Number of DALI addresses	1

Electrical Data	
Main Feed AC (V) Min	220
Main Feed AC (V) Max	240
Main Feed Frequency Min	50
Main Feed Frequency Max	60
Total Consumption (W)	33.38
Number Of Luminaire MCB 10B	12
Number Of Luminaire MCB 10C	21
Number Of Luminaire MCB 16B	21
Number Of Luminaire MCB 16C	35

Optic	
Optic Name	SM - Silver matt reflector
UGR (70/50/20 & 4H-8H crosswise)	16
Optic main category	Reflector

Certificates	
Certification	ENEC
DALI 2 certified	true

Technical Data	
Minimum TA (°C)	-25
Maximum TA (°C)	40
IK classification	02
IP classification	20

Light Technical Data	
Light source	LED
Lumen Out (lm)	4208
Lumen Per Watt (lm/W)	126
Lamp colour temp (K)	3000
Colour Rendering Index	>80
Light Distribution Up %	30
Light Distribution Down %	70
MacAdam step	3
Energy Class Light Source	D
Minimum Dim Level (%)	1

Driver / Ballast	
Type of LED Driver	DALI: Dimming
DALI-2 part 251, 252, 253	true
Number of Driver	1

Lifetime	
LED Lifetime L80B50 Ta25 (h)	100 000
LED Lifetime L80B50 Max Ta (h)	100 000
Driver lifetime at Ta=25, 10% failure rate (h)	100000
Driver lifetime at Ta=45, 10% failure rate (h)	50000
Luminous flux decline (LLMF) 50.000h Ta25	0.96

The Company reserves the right to change any product specifications without prior notification.

Housing	
Body Material	Steel
Body Colour	WH - White
Main Body Colour Name	Traffic white
Main Body Colour RAL code	RAL 9016

Dimensions	
Length (mm)	1179
Width (mm)	125
Height (mm)	32
Item Net Weight (kg)	2.8152

Termination	
Termination	5×2×2.5mm2 Push In

Cable	
Cable Cross section (mm²)	0.75
Cable End / Plug Name	Open End
Cable Length (m)	2.5
Cable Material	PVC
No of Leads	5
Cable diameter variation max (mm)	8

Logistic Data	
Item Gross Weight (kg)	3.06

The Company reserves the right to change any product specifications without prior notification.

Illustrations

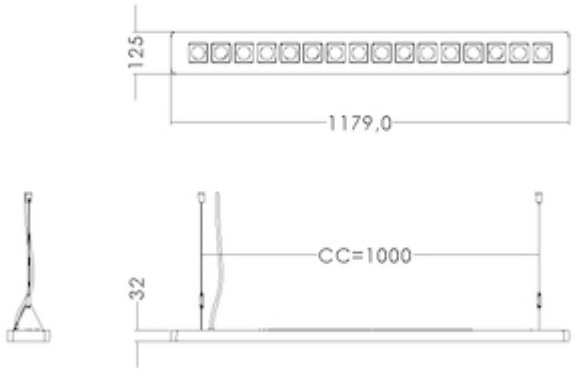

C77-P125×1200

