Montageanleitung

Instruction sheet

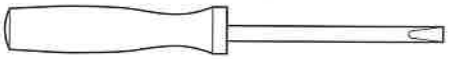

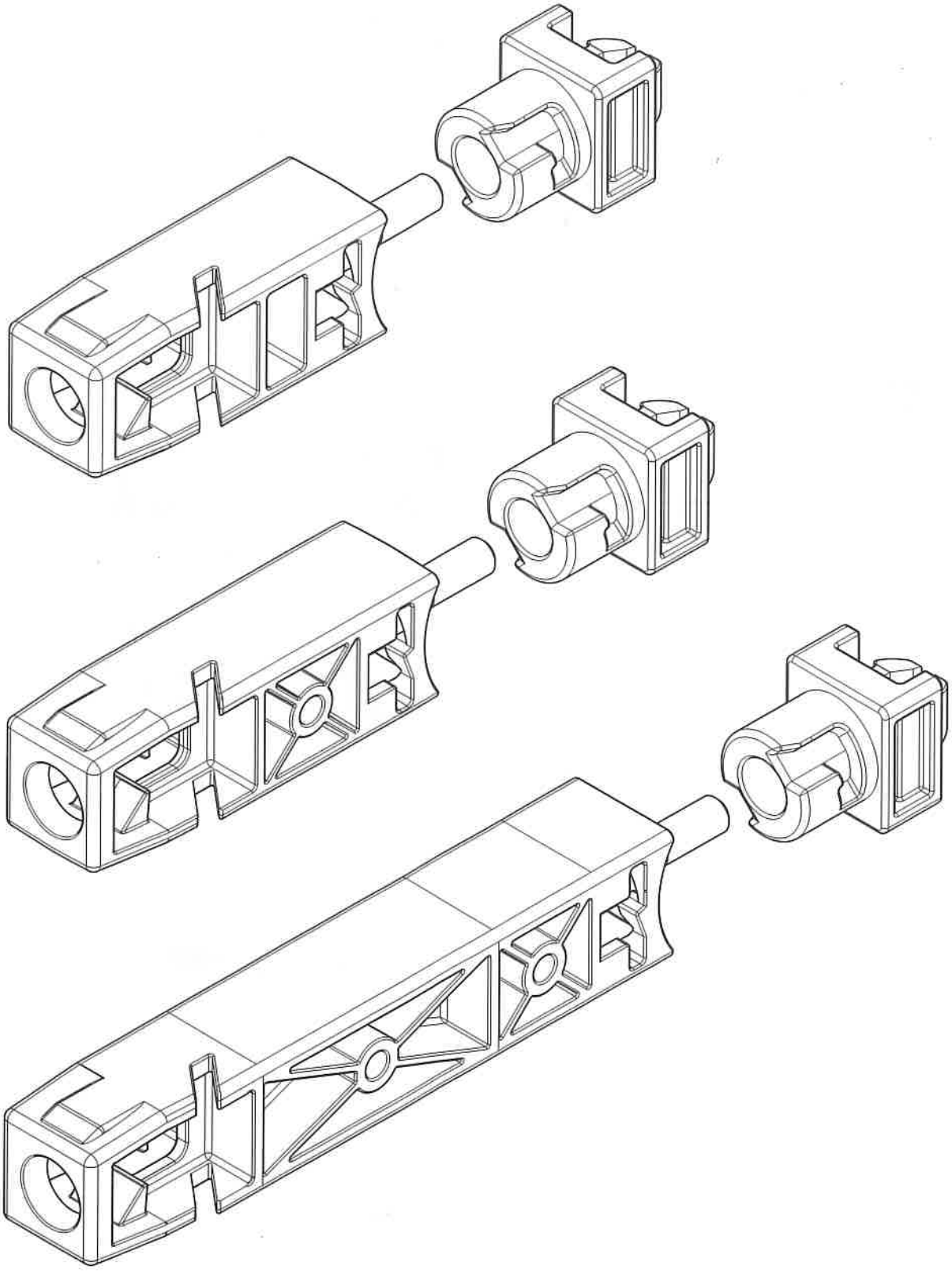

All Rights Reserved
Printed in Germany (03/23)

E-MAADPH2_02

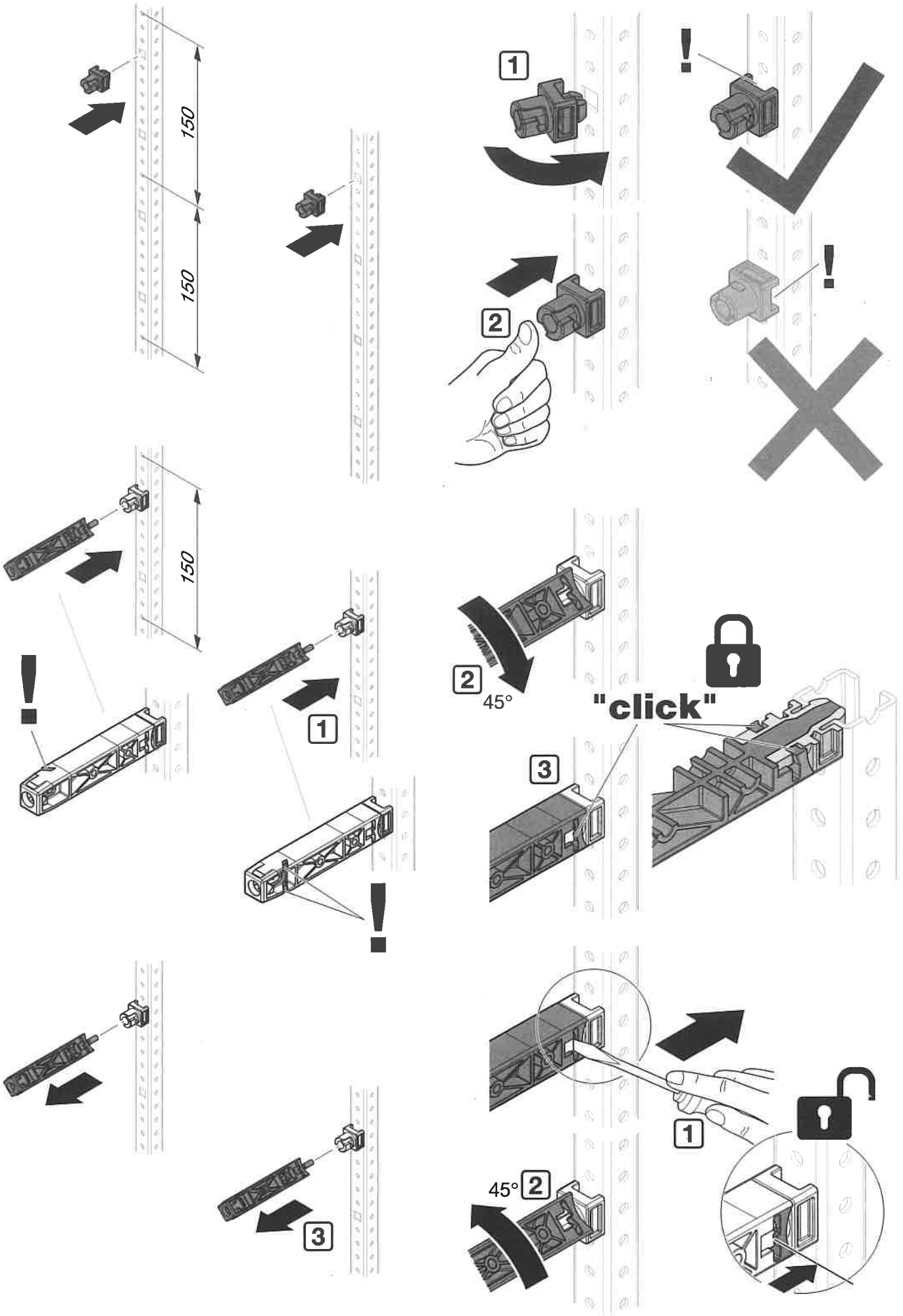

All Rights Reserved
Printed in Germany (03/23)

E-MAADPH2_02