by Schneider Electric

MT..5..

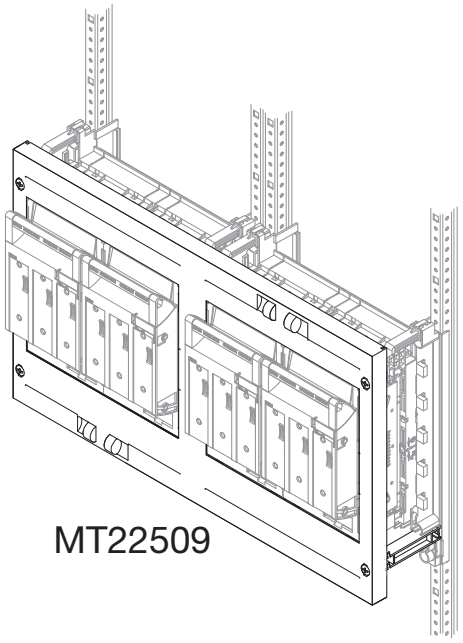

MT22509

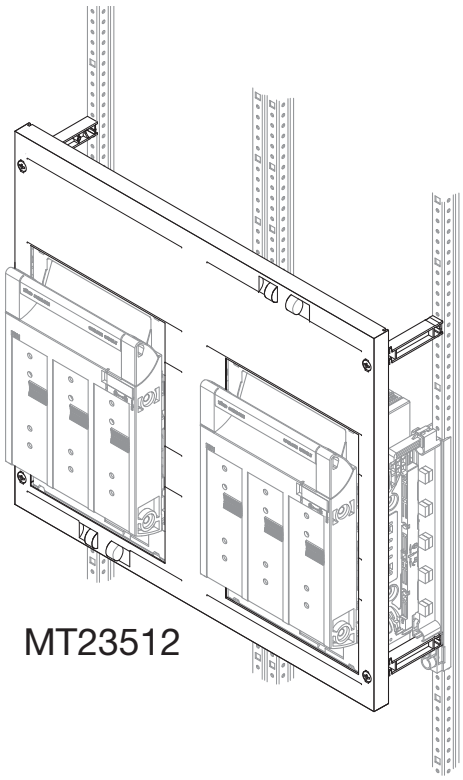

MT23512



(de) Dieses Produkt muss gemäß der geltenden Standards und Normen installiert und angeschlossen werden.

(en) This product must be installed, connected and used in compliance with prevailing standards and/or installation regulations.

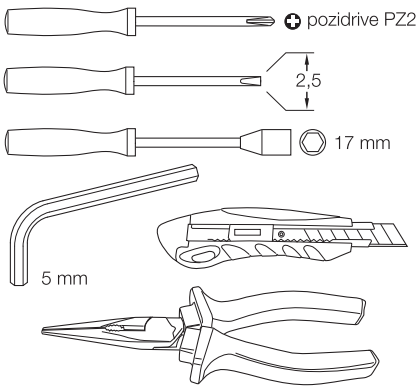

Pos.		MT12509	MT22509	MT13512	MT23512	MT23519
(1) a		1x				
(1) b	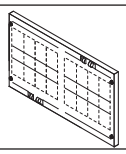		1x			
(1) c	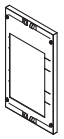			1x		
(1) d	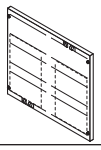				1x	
(1) e	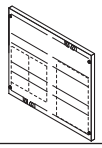					1x
(2)	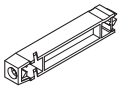	4x	4x	4x	4x	4x
FAH5N.	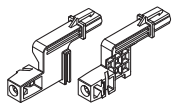	1x	1x			

ABN GmbH, Daimlerstraße 10 - 12, D-74196 Neuenstadt,
Fon: +49 (0) 71 39 / 94 - 0, Fax: +49 (0) 71 39 / 94 - 49, E-Mail: abn@abn-elektro.de, www.abn-elektro.de

All Rights Reserved
Printed in Germany (02/17) E-MAMX500_02

1

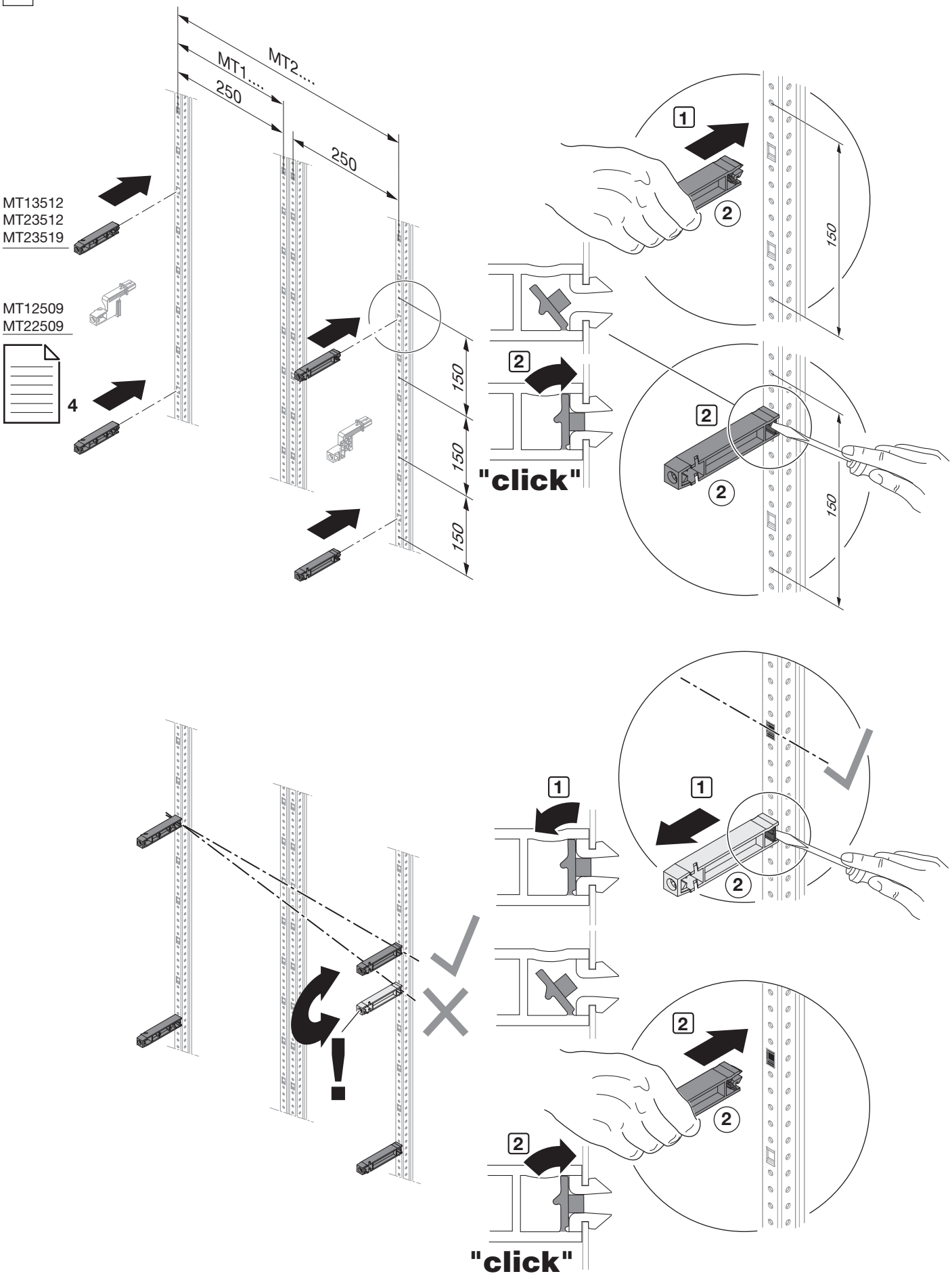

ABN GmbH, Daimlerstraße 10 - 12, D-74196 Neuenstadt,
Fon: +49 (0) 71 39 / 94 - 0, Fax: +49 (0) 71 39 / 94 - 49, E-Mail: abn@abn-elektro.de, www.abn-elektro.de

All Rights Reserved
Printed in Germany (02/17) E-MAMX500_02

2

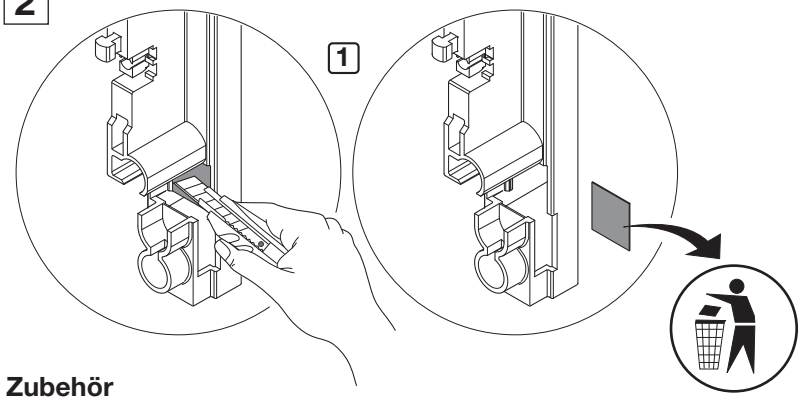

Zubehör
Accessories

	GST40N	
1	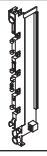	1x
2		1x
3		2x
4	 4,8x13	4x

3

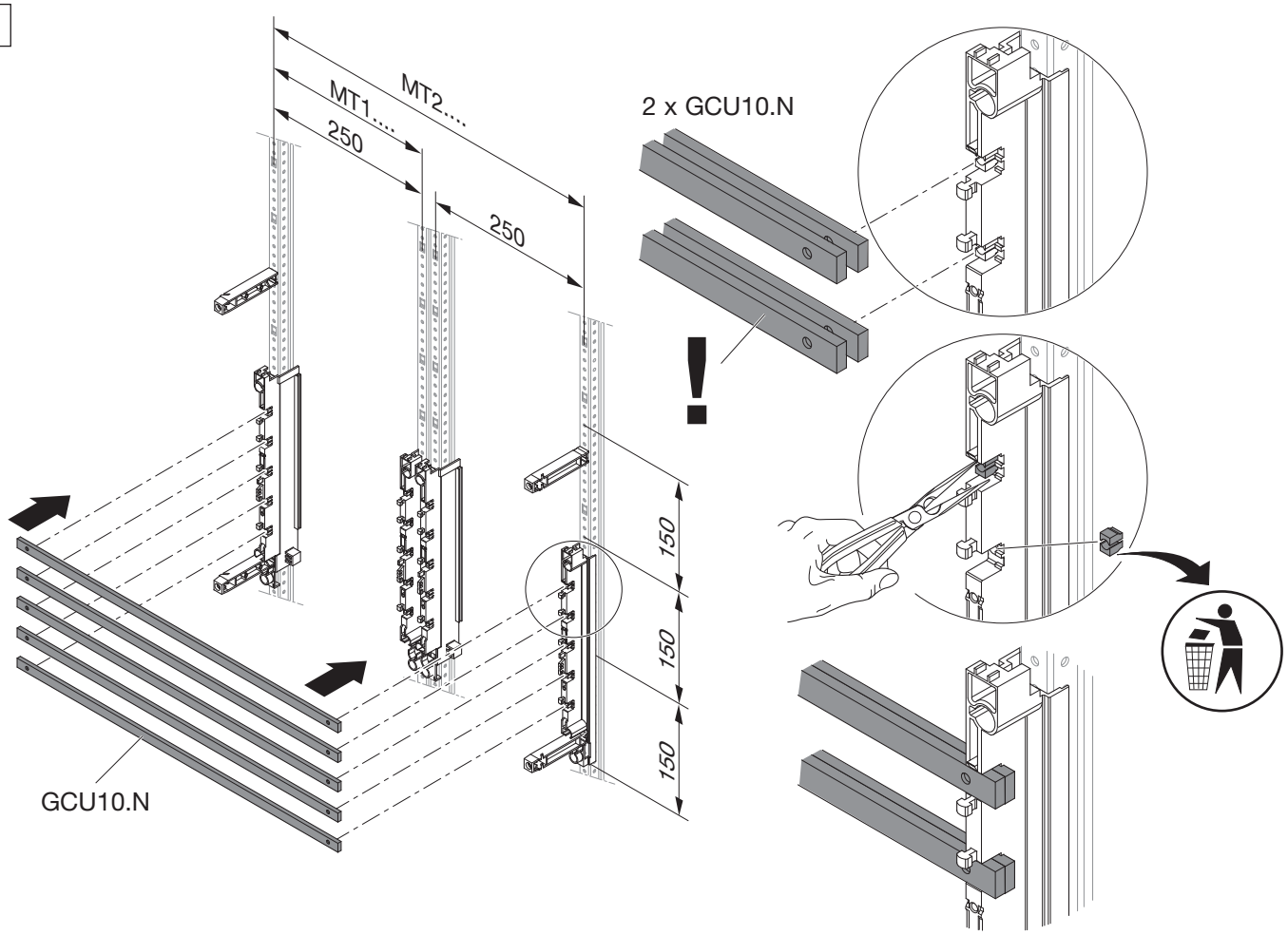

ABN GmbH, Daimlerstraße 10 - 12, D-74196 Neuenstadt,
Fon: +49 (0) 71 39 / 94 - 0, Fax: +49 (0) 71 39 / 94 - 49, E-Mail: abn@abn-elektro.de, www.abn-elektro.de

All Rights Reserved
Printed in Germany (02/17) E-MAMX500_02

4

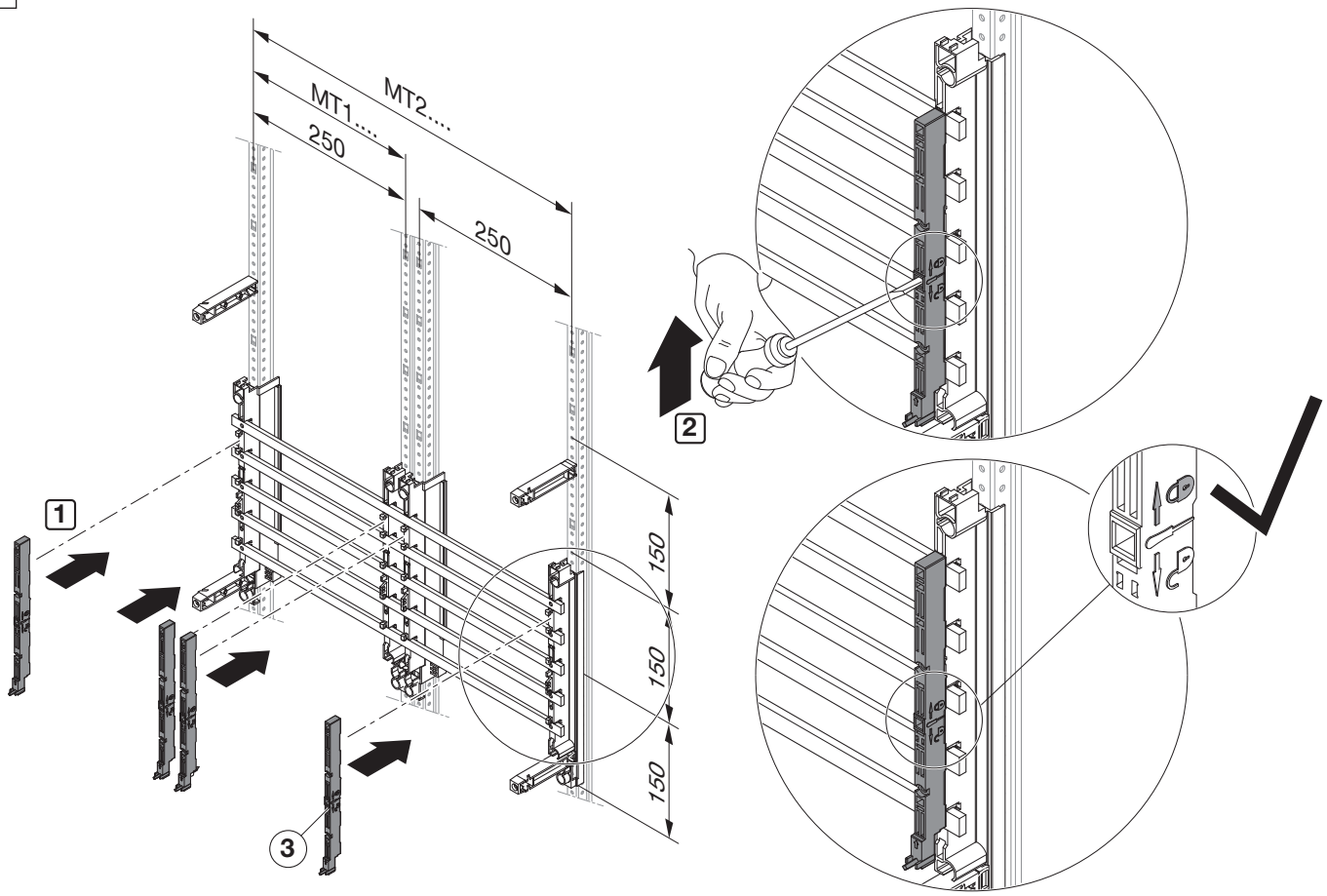

5

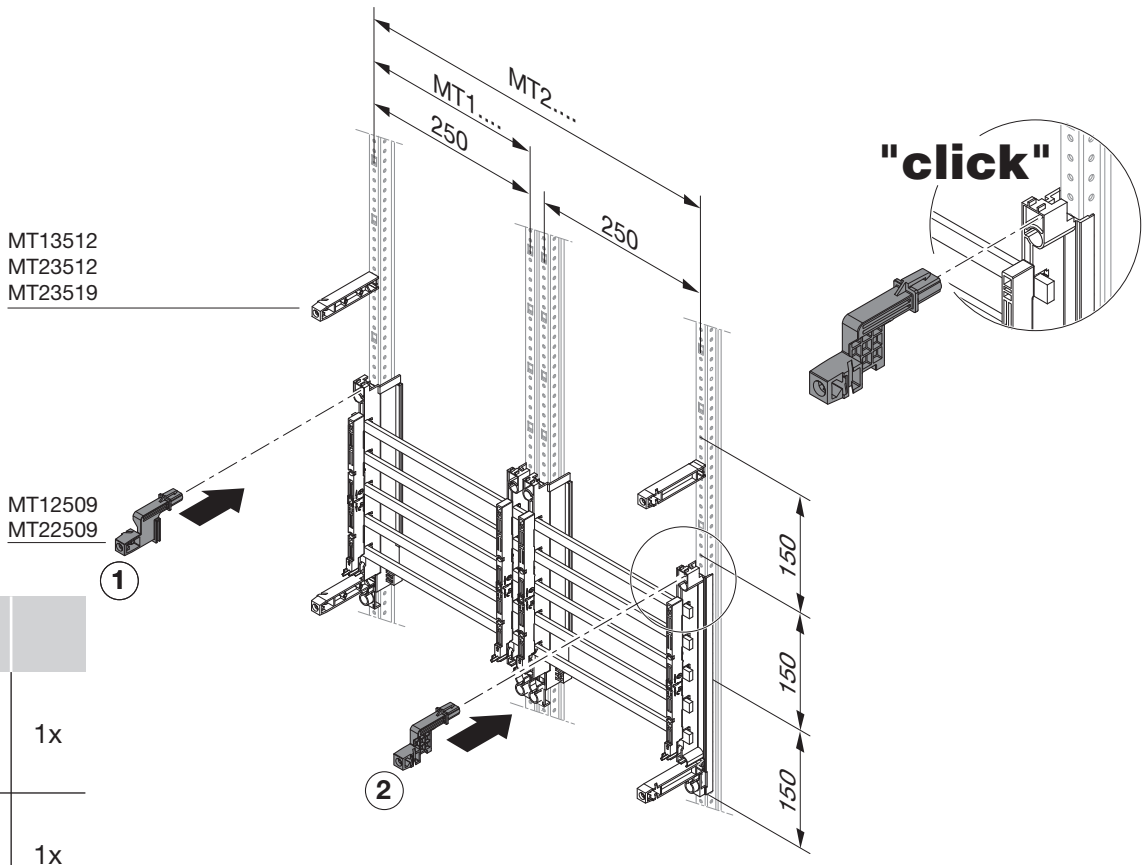

Zubehör
Accessories

	FAH5N.	
1	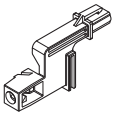	1x
2	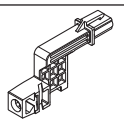	1x

ABN GmbH, Daimlerstraße 10 - 12, D-74196 Neuenstadt,
Fon: +49 (0) 71 39 / 94 - 0, Fax: +49 (0) 71 39 / 94 - 49, E-Mail: abn@abn-elektro.de, www.abn-elektro.de

All Rights Reserved
Printed in Germany (02/17) E-MAMX500_02

6 A MT12509

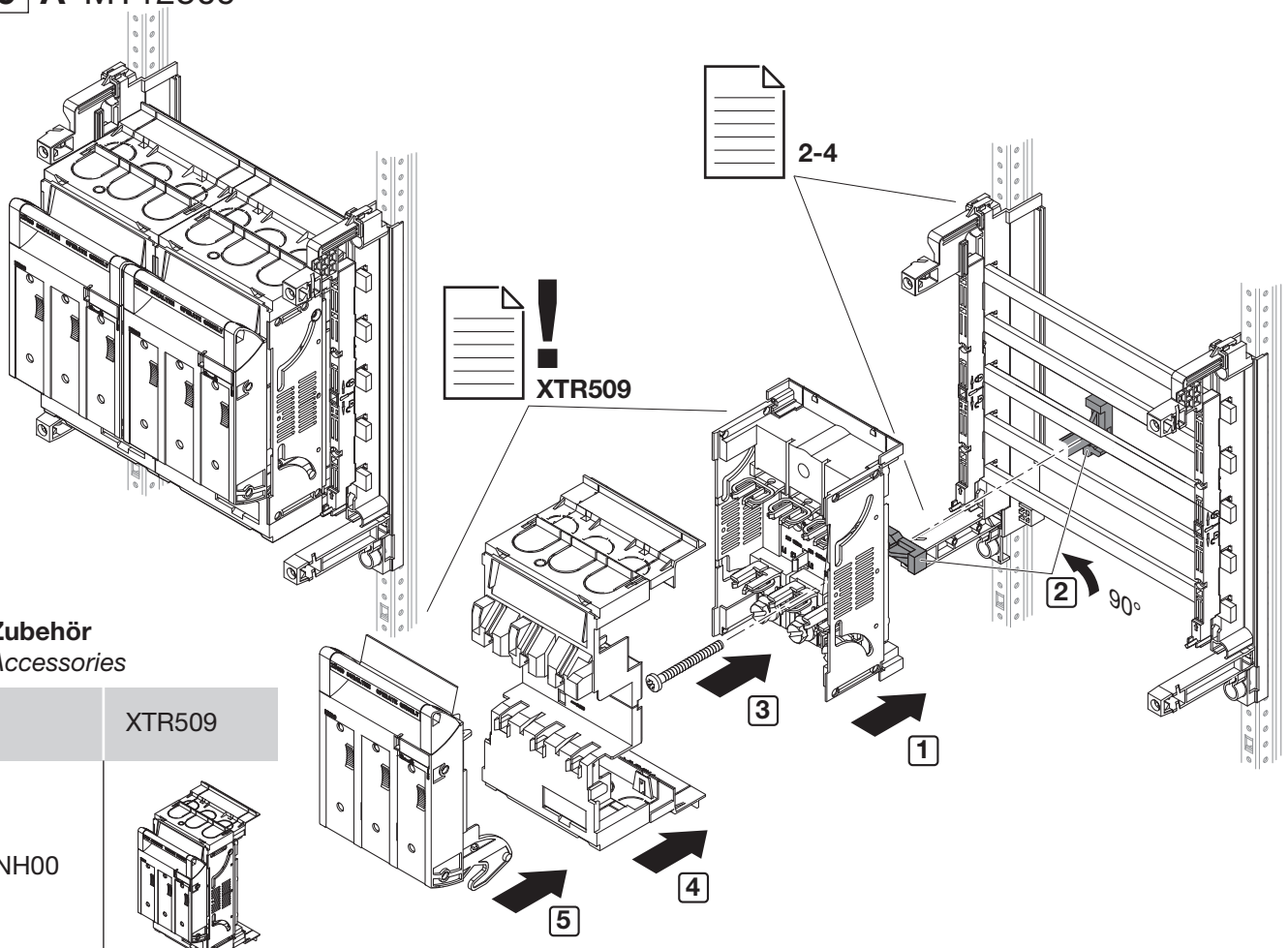

Zubehör
Accessories

	XTR509
NH00	

7 A MT12509

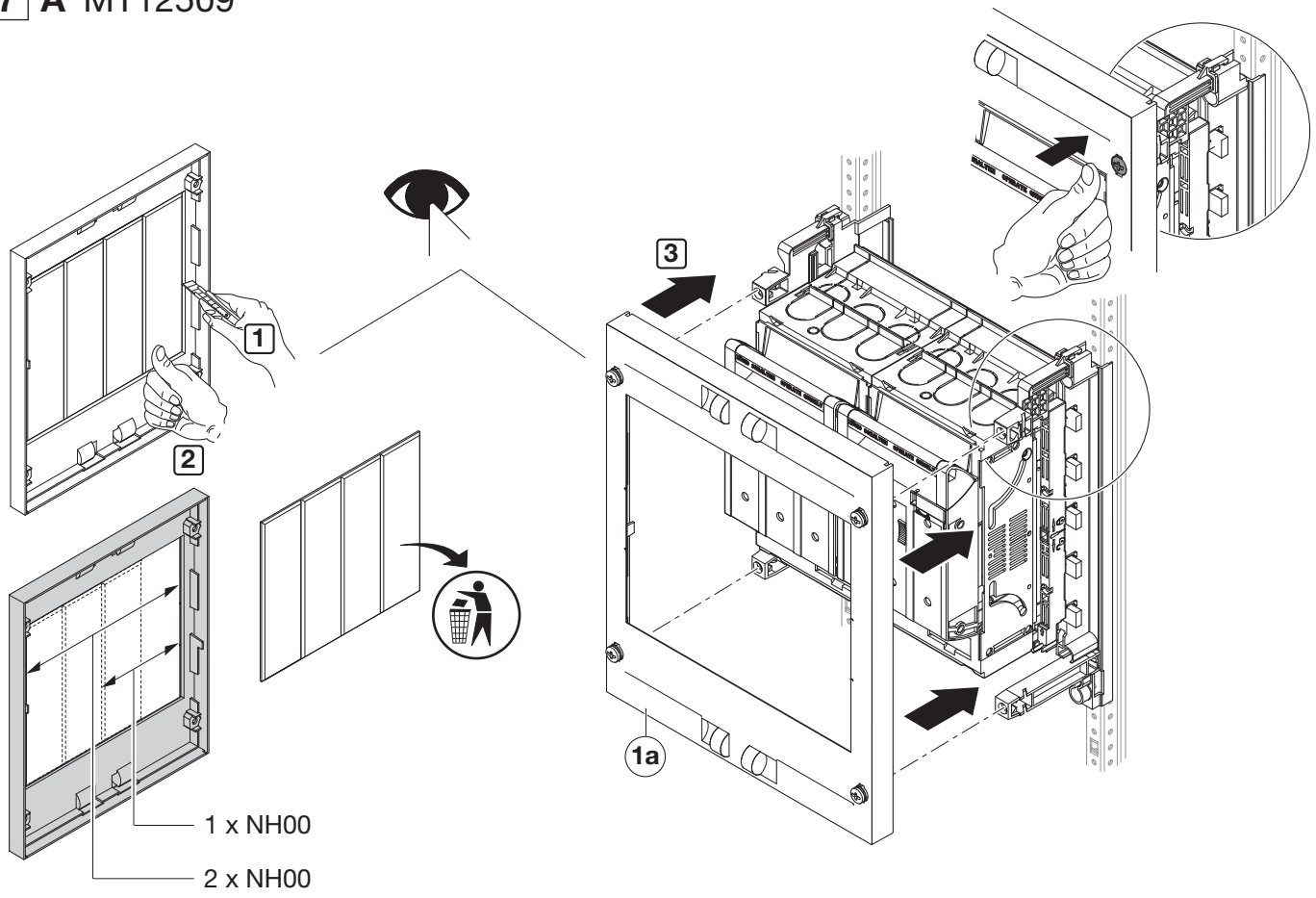

ABN GmbH, Daimlerstraße 10 - 12, D-74196 Neuenstadt,
Fon: +49 (0) 71 39 / 94 - 0, Fax: +49 (0) 71 39 / 94 - 49, E-Mail: abn@abn-elektro.de, www.abn-elektro.de

All Rights Reserved
Printed in Germany (02/17) E-MAMX500_02

8 **A** MT12509

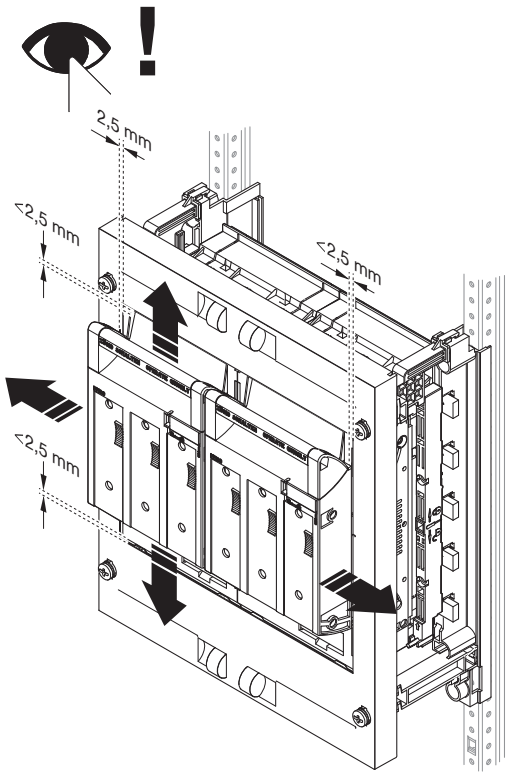

1 **A** MT12509

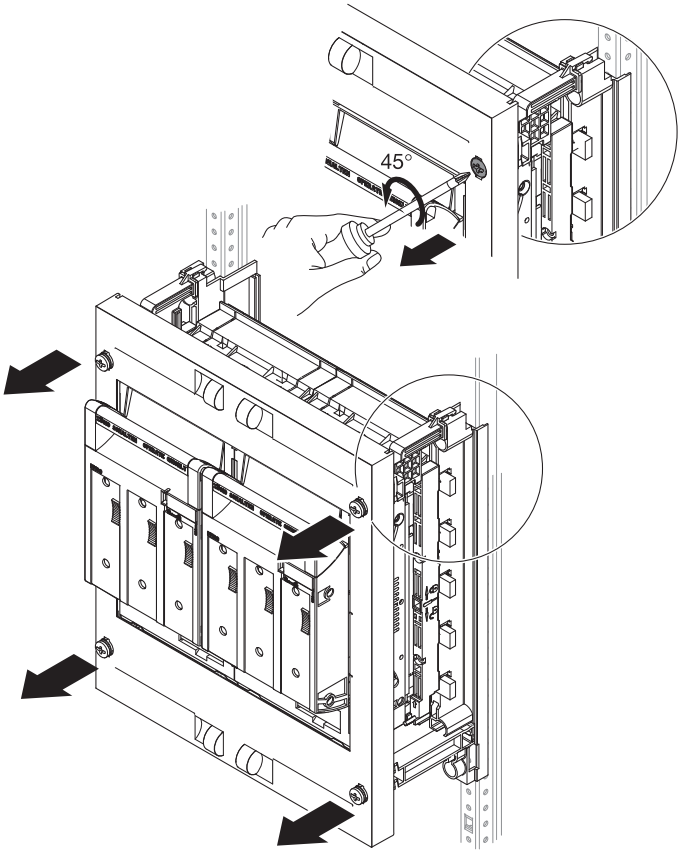

6 **B** MT22509

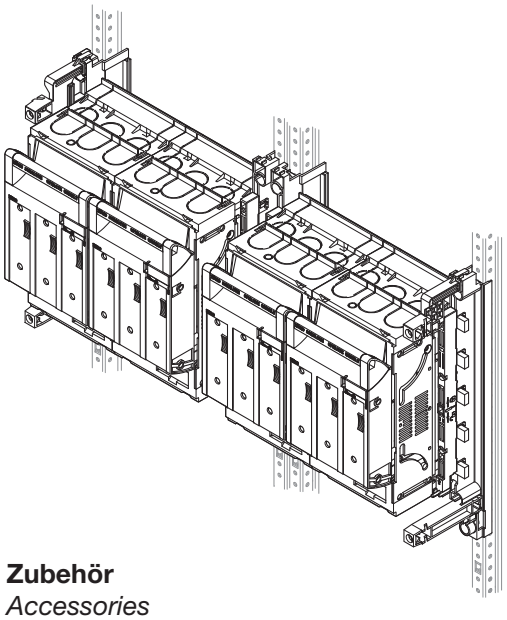

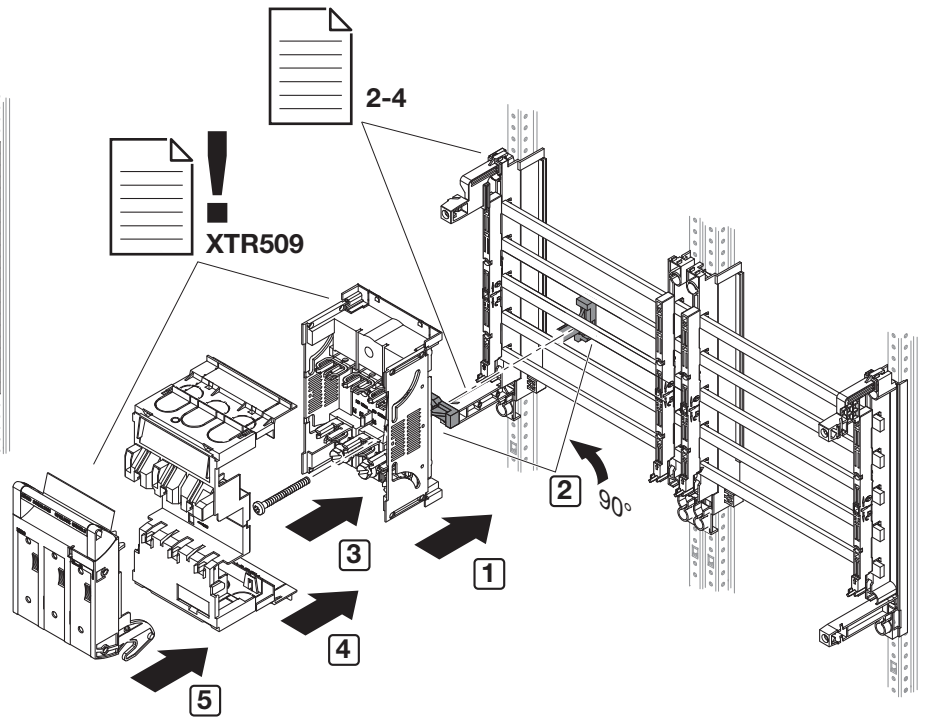

Zubehör
Accessories

	XTR509
NH00	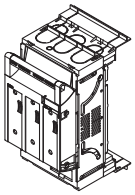

6/12

ABN GmbH, Daimlerstraße 10 - 12, D-74196 Neuenstadt,
Fon: +49 (0) 71 39 / 94 - 0, Fax: +49 (0) 71 39 / 94 - 49, E-Mail: abn@abn-elektro.de, www.abn-elektro.de

All Rights Reserved
Printed in Germany (02/17) E-MAMX500_02

7 B MT22509

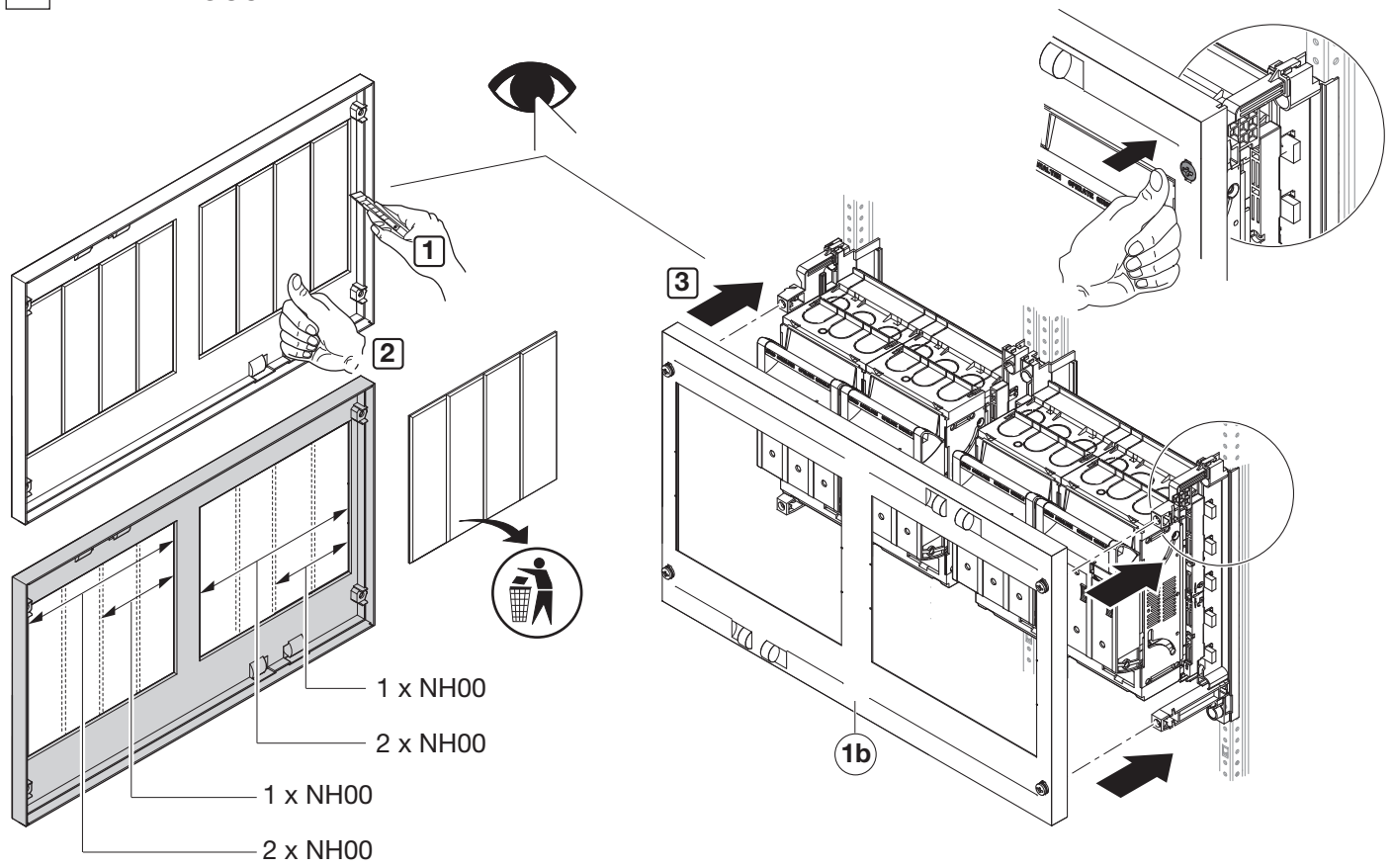

8 B MT22509

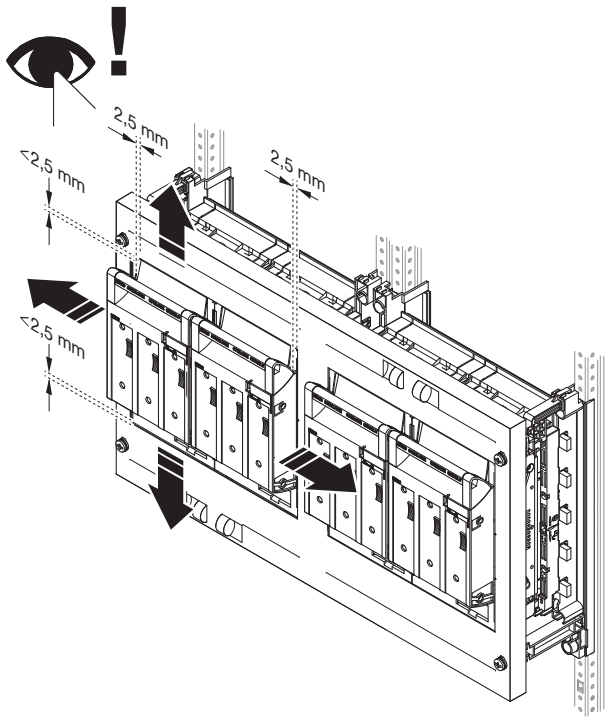

1 B MT22509

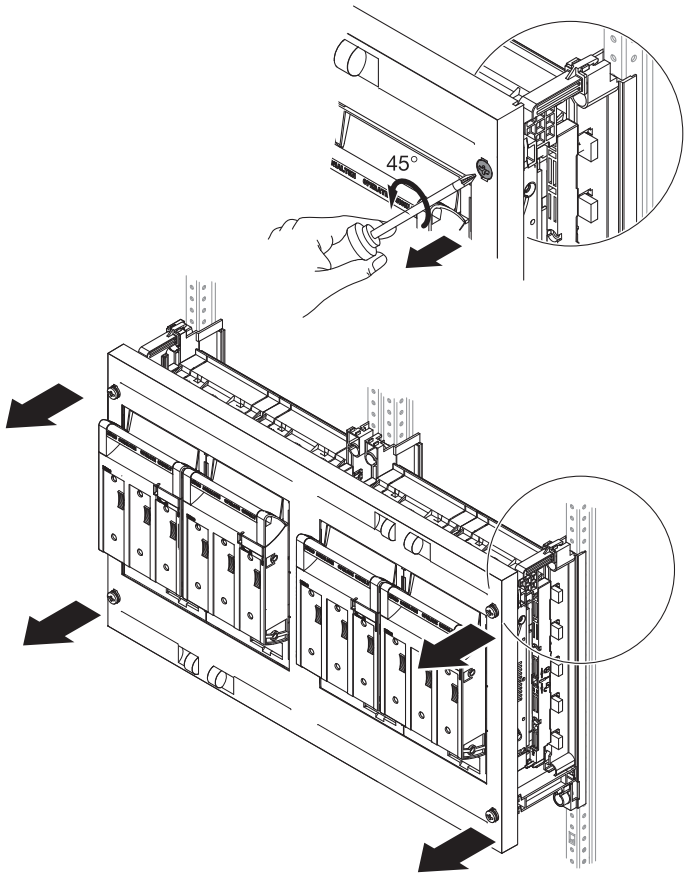

ABN GmbH, Daimlerstraße 10 - 12, D-74196 Neuenstadt,
Fon: +49 (0) 71 39 / 94 - 0, Fax: +49 (0) 71 39 / 94 - 49, E-Mail: abn@abn-elektro.de, www.abn-elektro.de

All Rights Reserved
Printed in Germany (02/17) E-MAMX500_02

6 C MT13512

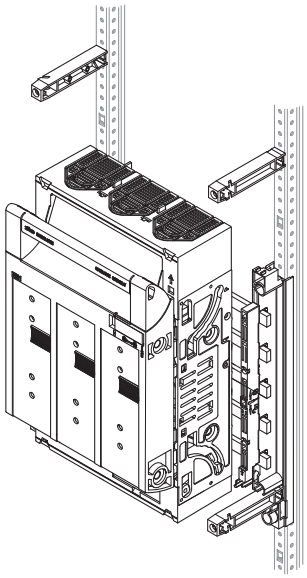

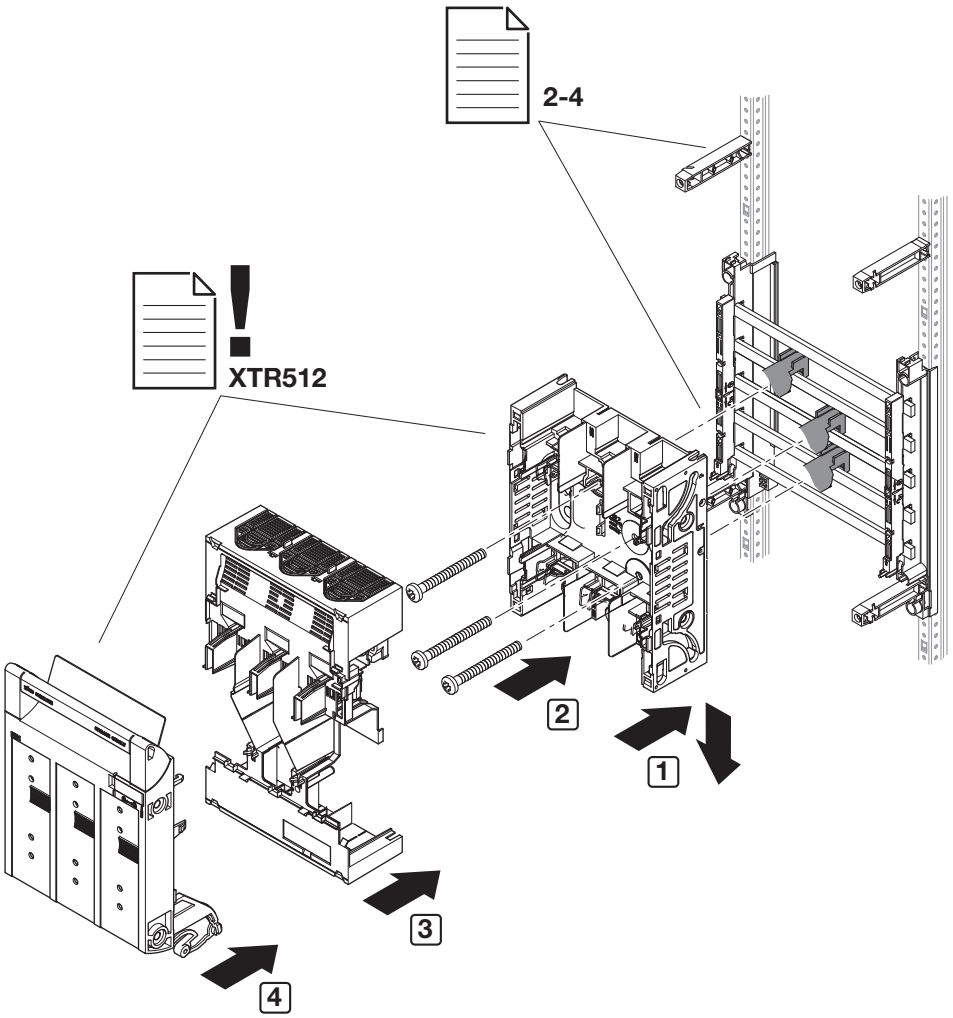

Zubehör
Accessories

	XTR512
NH1	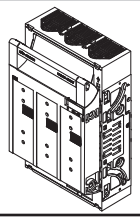

7 C MT13512

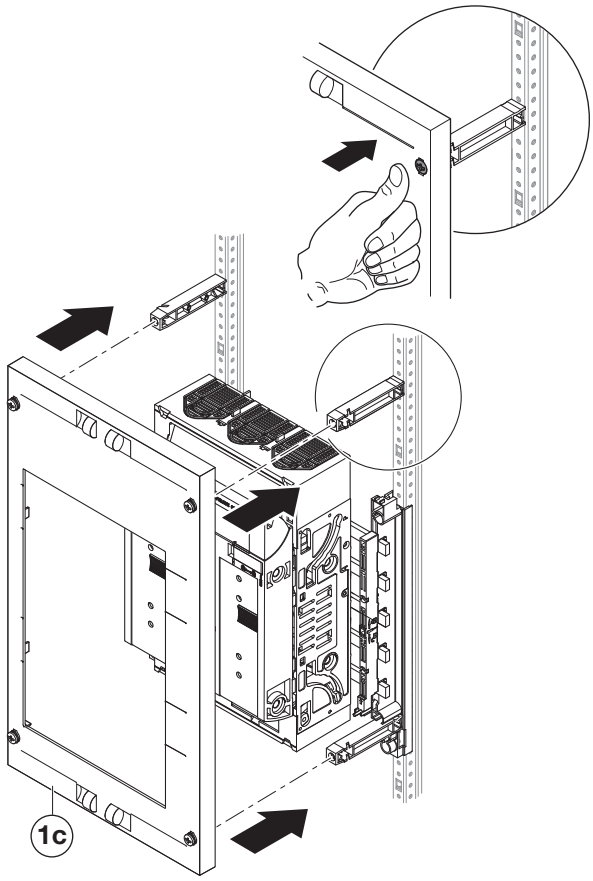

8 C MT13512

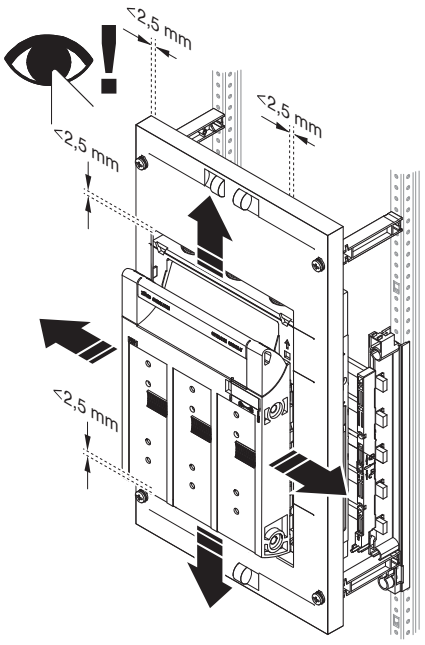

ABN GmbH, Daimlerstraße 10 - 12, D-74196 Neuenstadt,
Fon: +49 (0) 71 39 / 94 - 0, Fax: +49 (0) 71 39 / 94 - 49, E-Mail: abn@abn-elektro.de, www.abn-elektro.de

All Rights Reserved
Printed in Germany (02/17) E-MAMX500_02

1 C MT13512

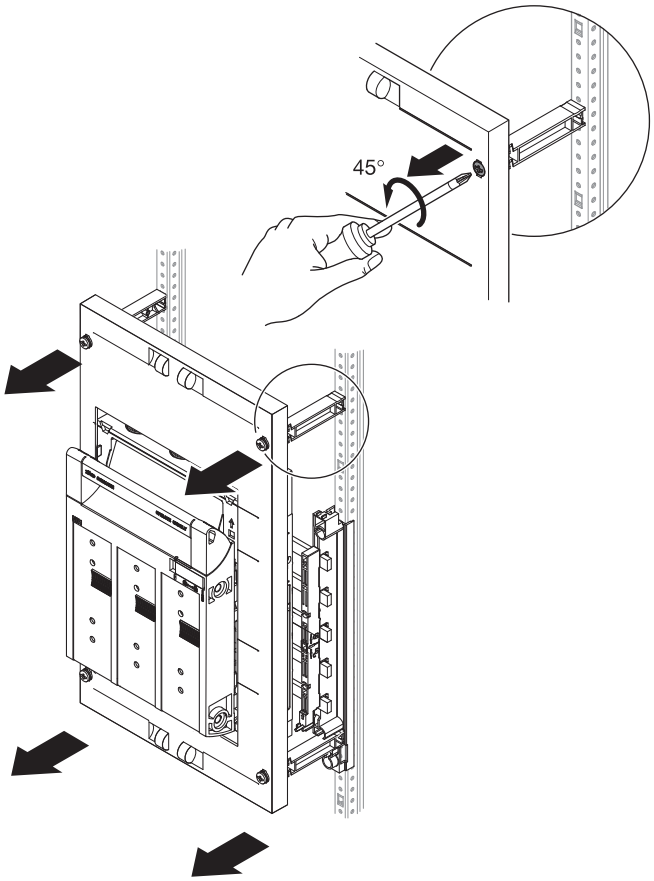

6 D MT23512

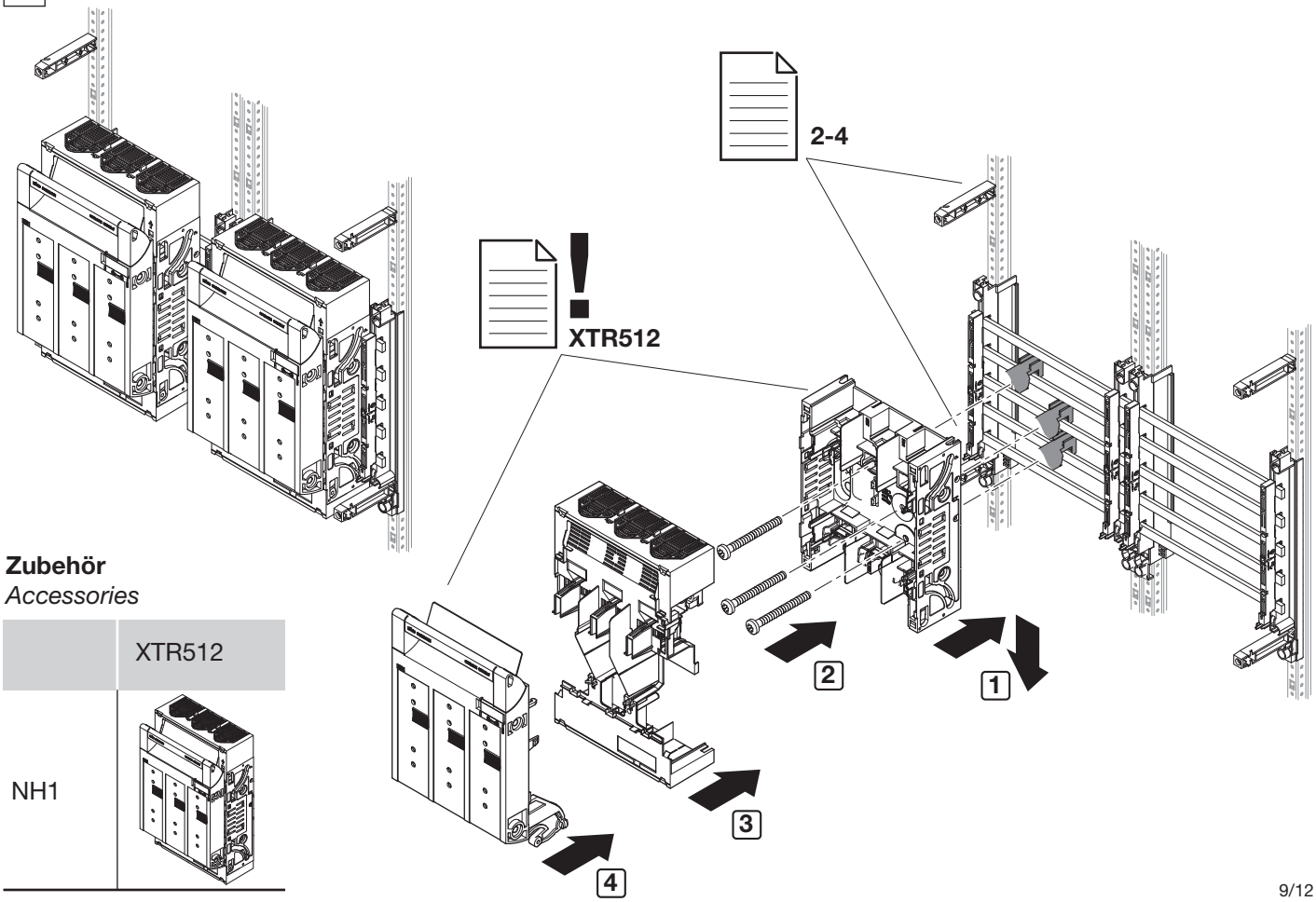

Zubehör
Accessories

	XTR512
NH1	

9/12

ABN GmbH, Daimlerstraße 10 - 12, D-74196 Neuenstadt,
Fon: +49 (0) 71 39 / 94 - 0, Fax: +49 (0) 71 39 / 94 - 49, E-Mail: abn@abn-elektro.de, www.abn-elektro.de

All Rights Reserved
Printed in Germany (02/17) E-MAMX500_02

7 D MT23512

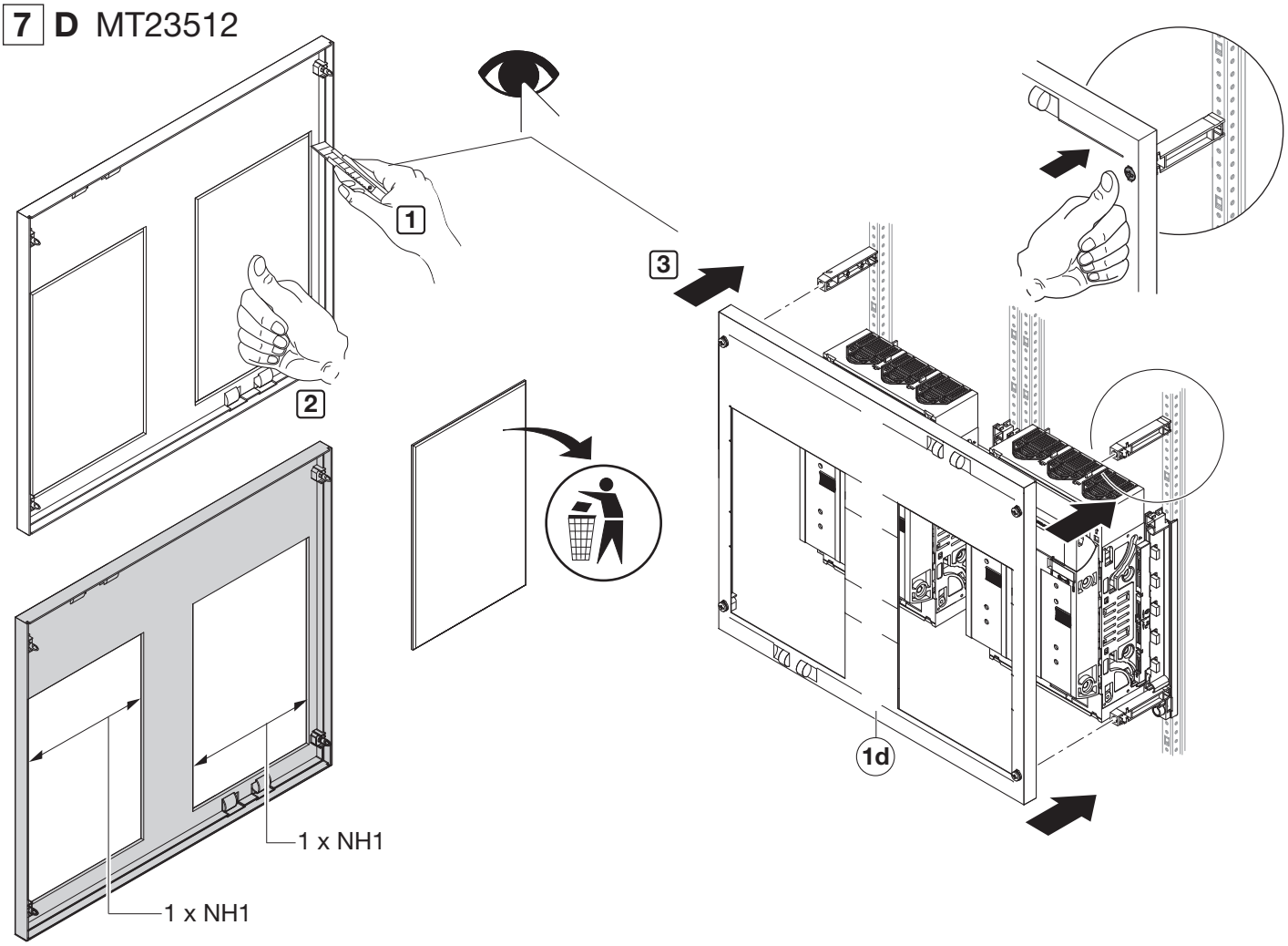

8 D MT23512

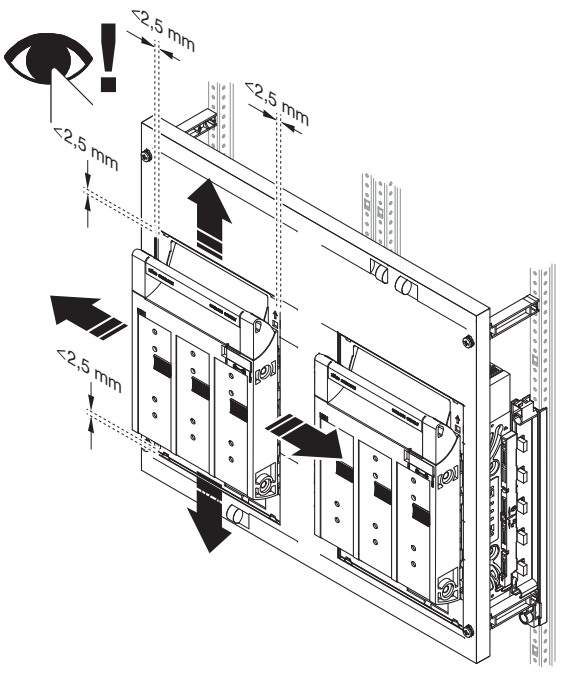

1 D MT23512

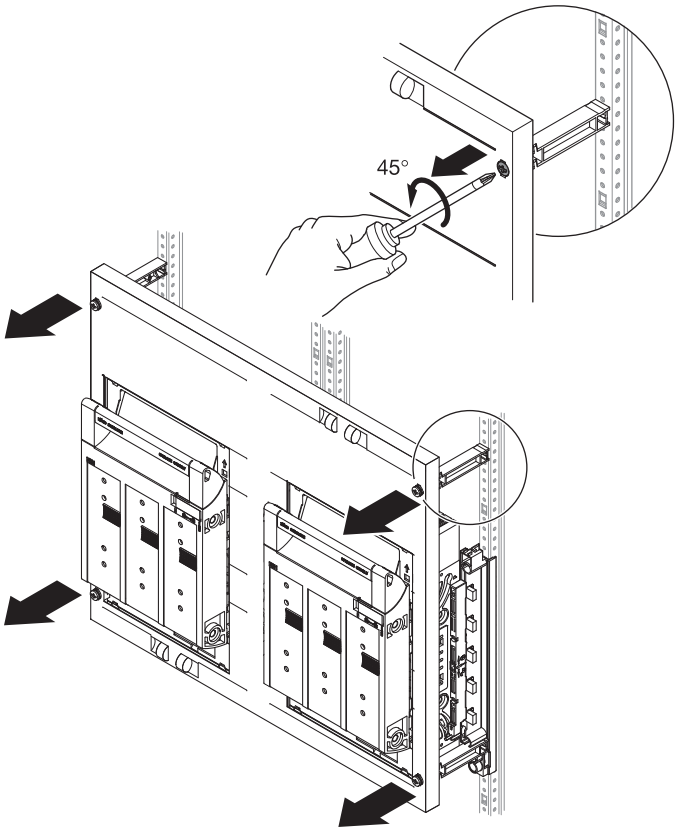

10/12

ABN GmbH, Daimlerstraße 10 - 12, D-74196 Neuenstadt,
Fon: +49 (0) 71 39 / 94 - 0, Fax: +49 (0) 71 39 / 94 - 49, E-Mail: abn@abn-elektro.de, www.abn-elektro.de

All Rights Reserved
Printed in Germany (02/17) E-MAMX500_02

6 E MT23519

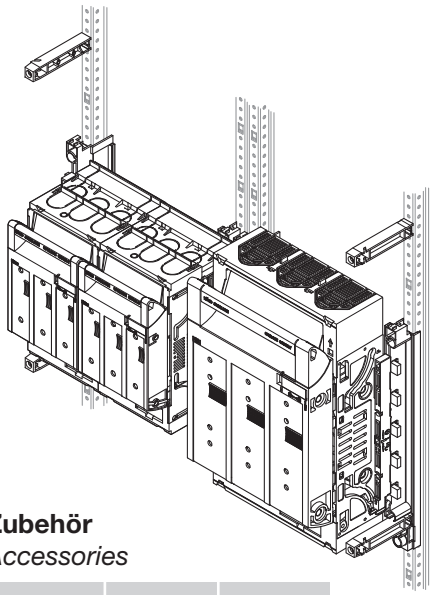

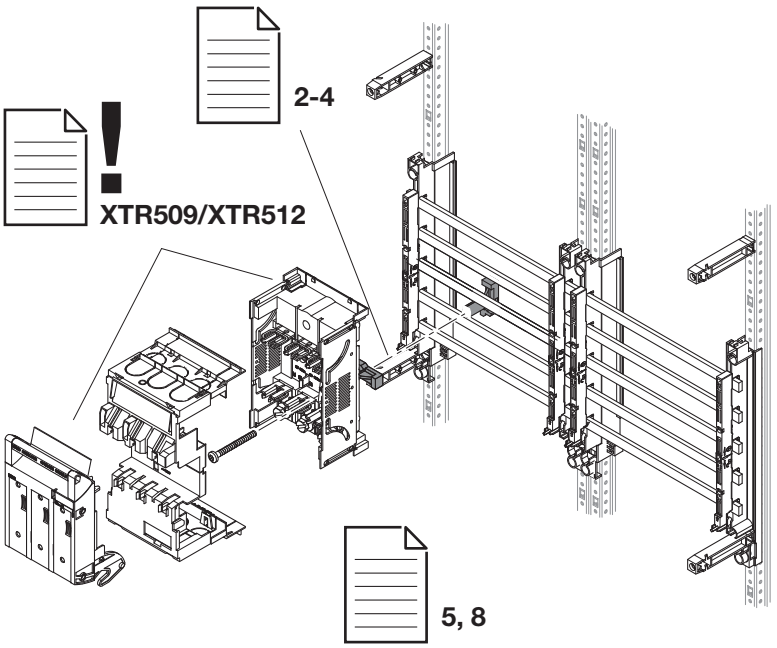

Zubehör
Accessories

	XTR509	XTR512
NH00	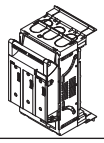	
NH1		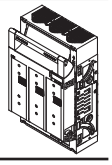

7 E MT23519

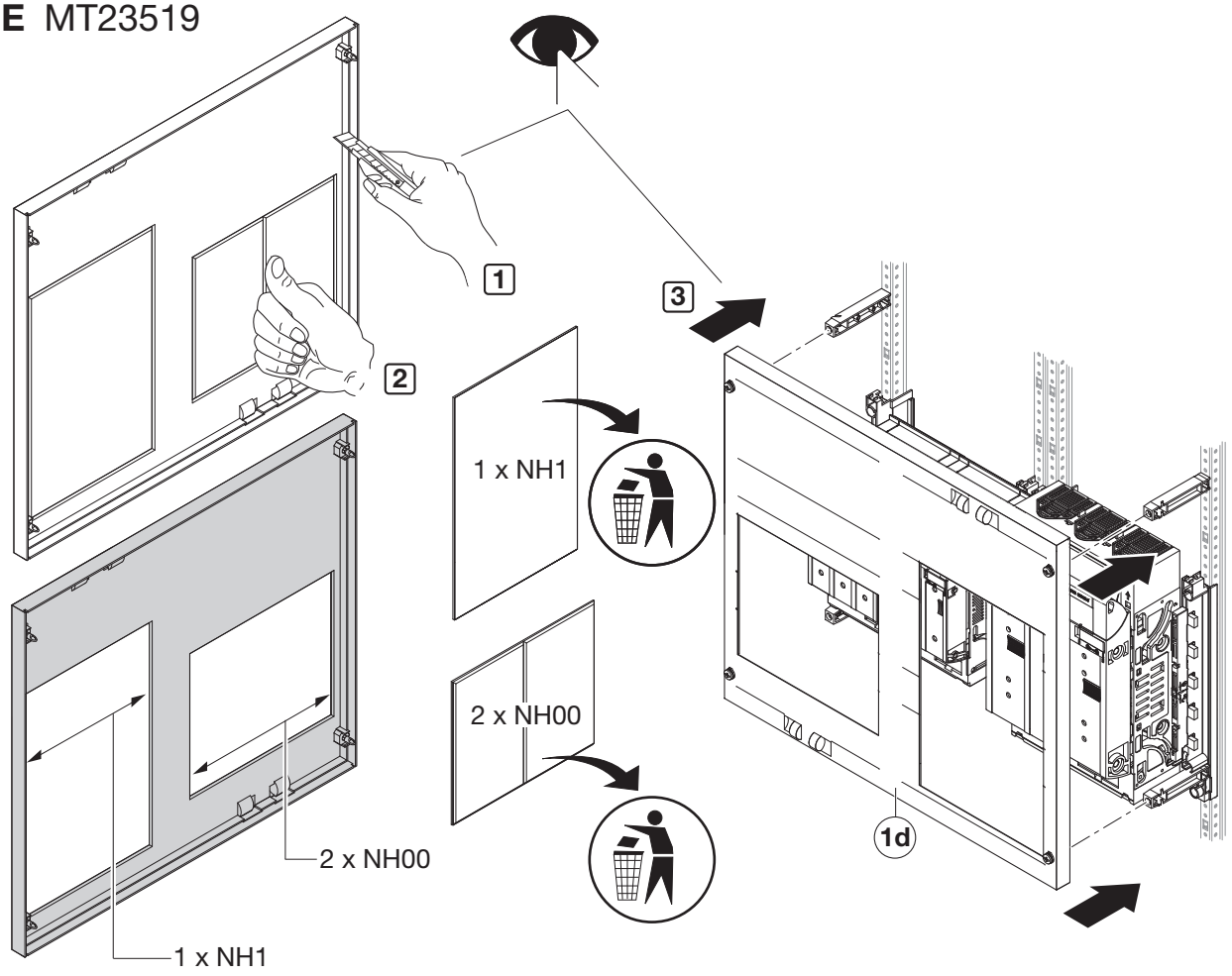

11/12

ABN GmbH, Daimlerstraße 10 - 12, D-74196 Neuenstadt,
Fon: +49 (0) 71 39 / 94 - 0, Fax: +49 (0) 71 39 / 94 - 49, E-Mail: abn@abn-elektro.de, www.abn-elektro.de

All Rights Reserved
Printed in Germany (02/17) E-MAMX500_02

8 E MT23519

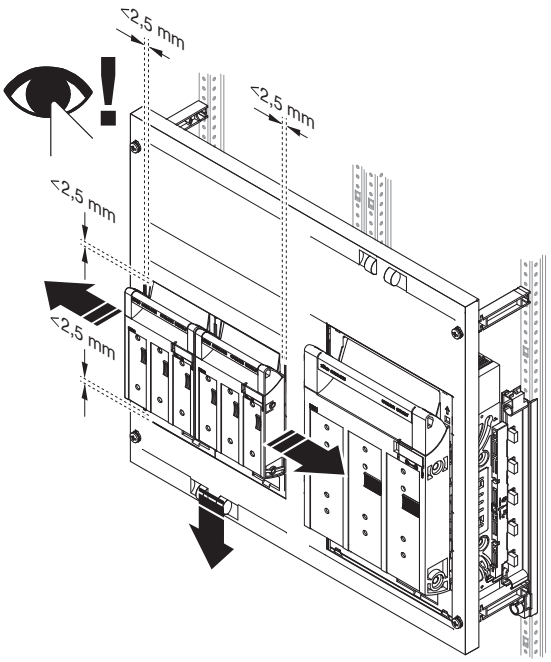

1 E MT23519

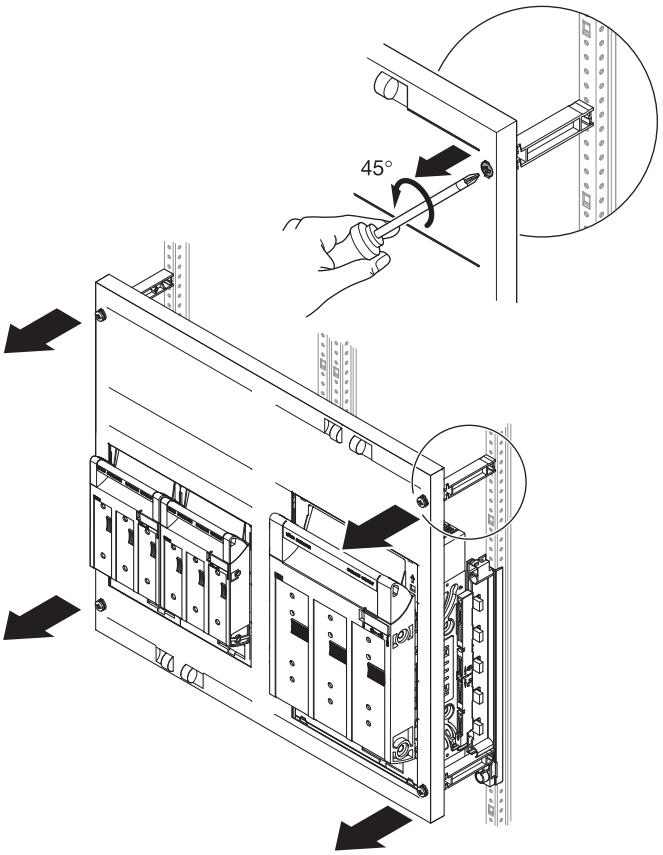

ABN GmbH, Daimlerstraße 10 - 12, D-74196 Neuenstadt,
Fon: +49 (0) 71 39 / 94 - 0, Fax: +49 (0) 71 39 / 94 - 49, E-Mail: abn@abn-elektro.de, www.abn-elektro.de

All Rights Reserved
Printed in Germany (02/17) E-MAMX500_02