1

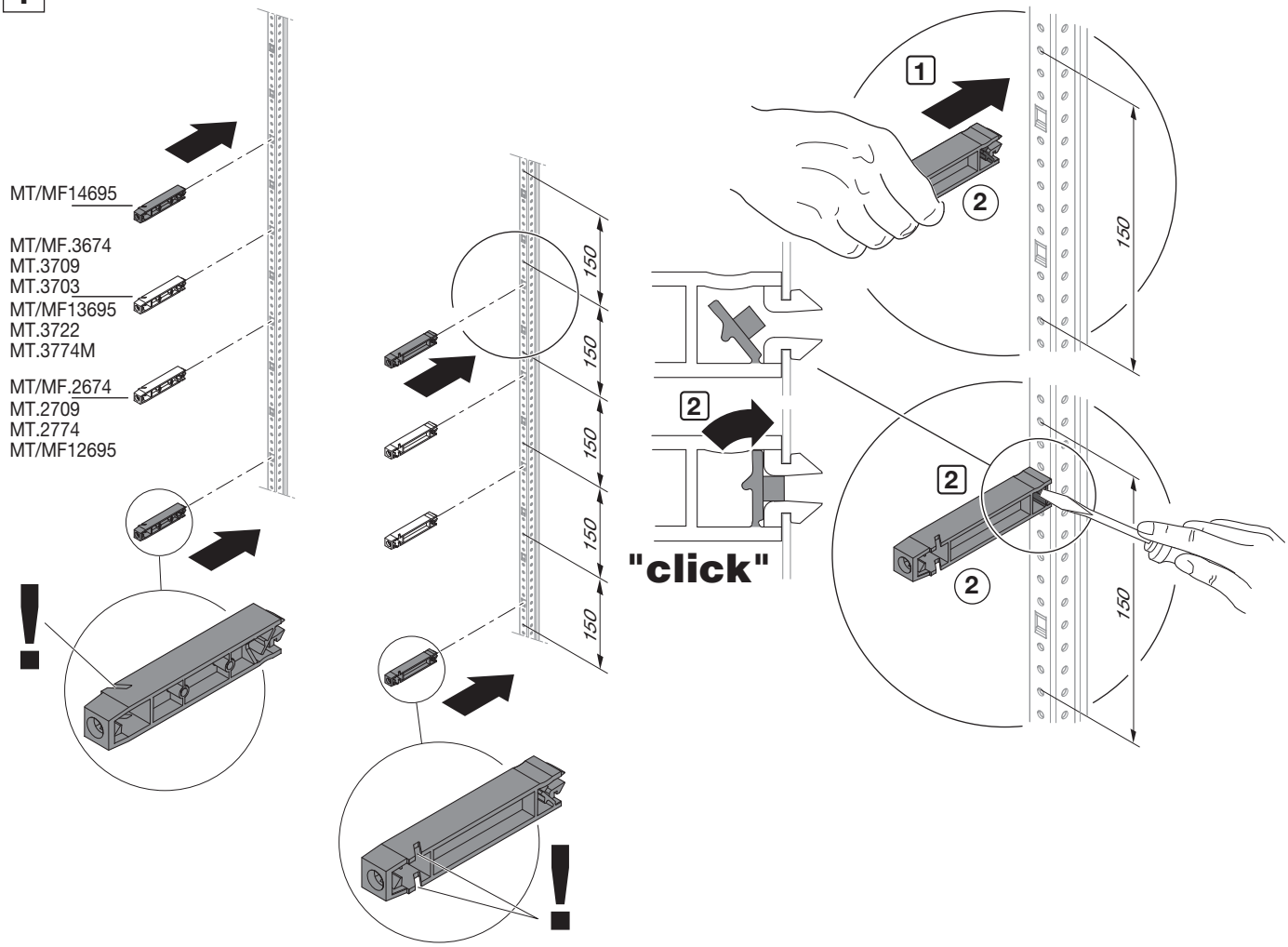

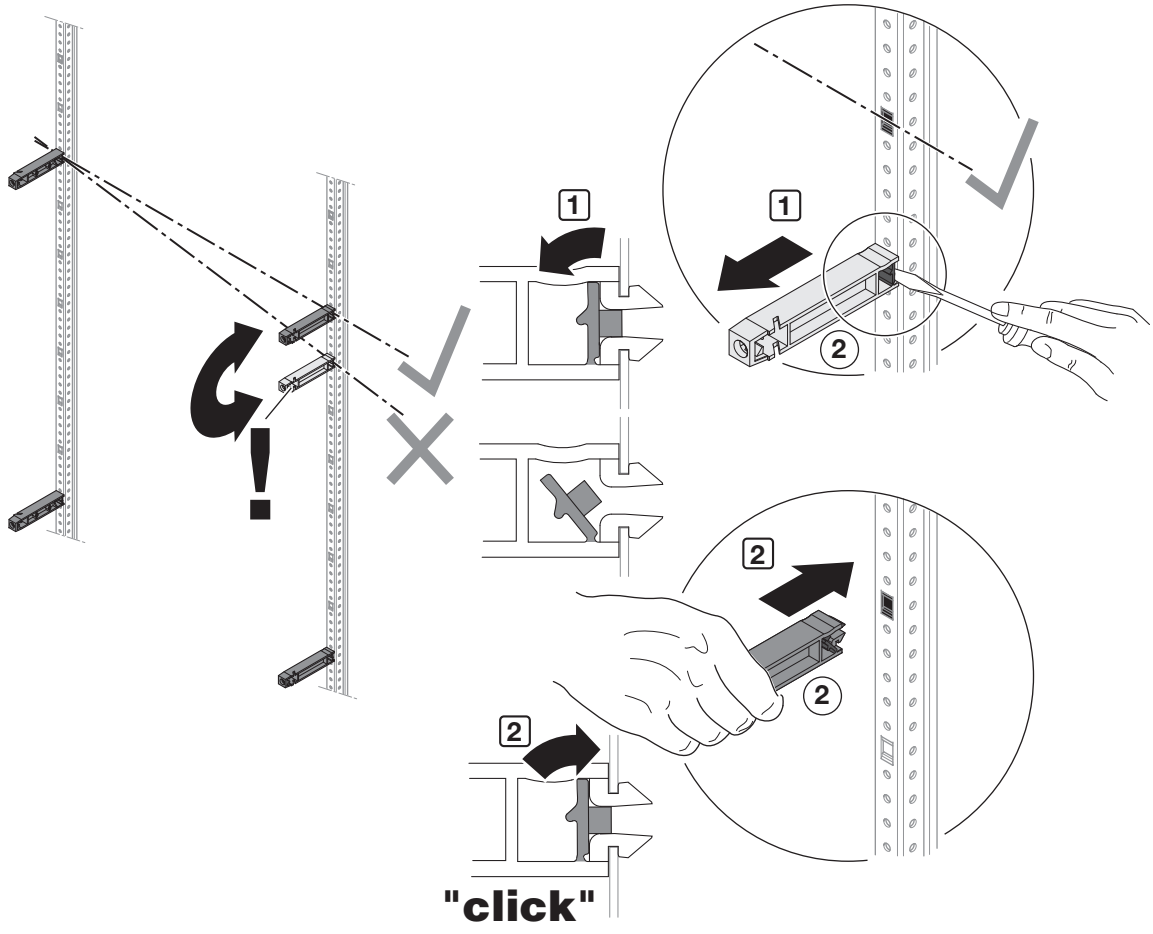

ABN GmbH, Daimlerstraße 10 - 12, D-74196 Neuenstadt,
Fon: +49 (0) 71 39 / 94 - 0, Fax: +49 (0) 71 39 / 94 - 49, E-Mail: abn@abn-elektro.de, www.abn-elektro.de

All Rights Reserved
Printed in Germany (12/18) E-MAMX600_03

7 F-G MT23703

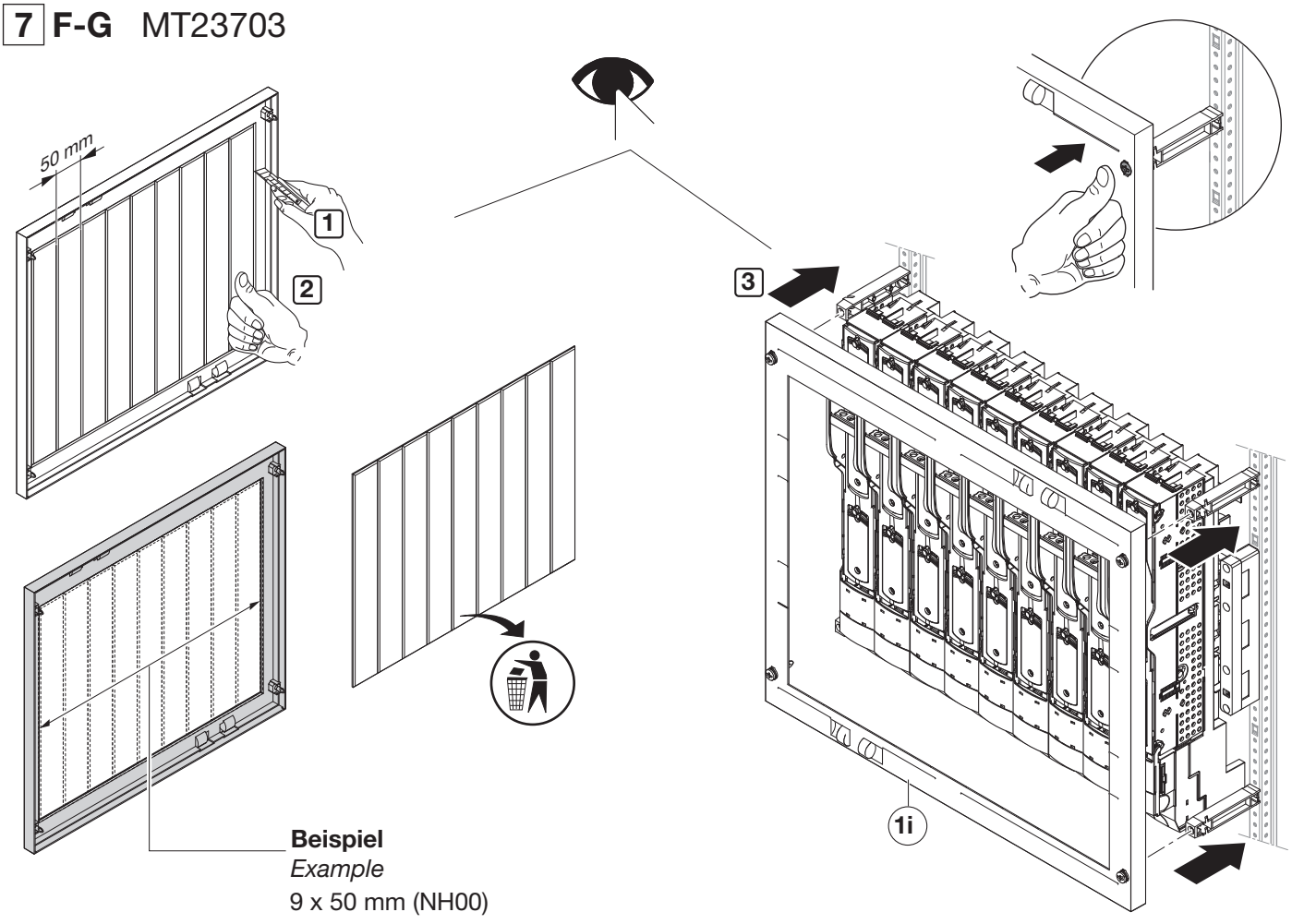

Beispiel
Example
9 x 50 mm (NH00)

8 F-G MT23703

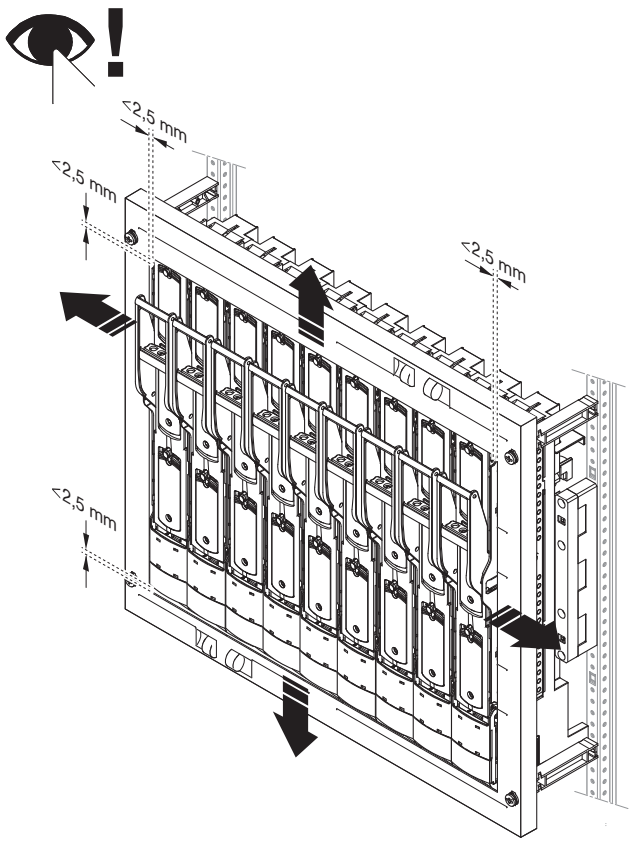

1 F-G MT23703

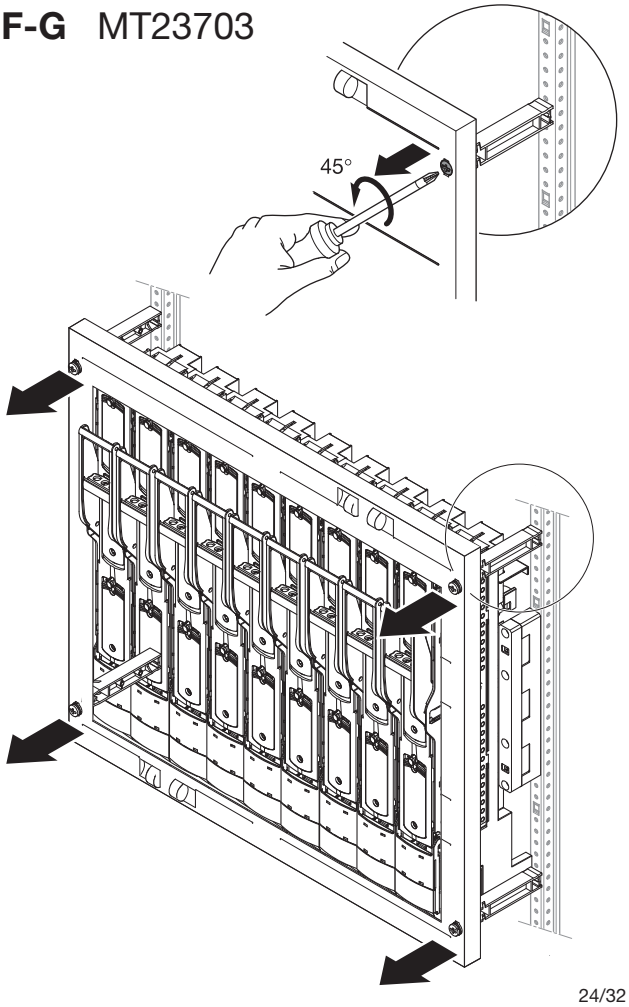

ABN GmbH, Daimlerstraße 10 - 12, D-74196 Neuenstadt,
Fon: +49 (0) 71 39 / 94 - 0, Fax: +49 (0) 71 39 / 94 - 49, E-Mail: abn@abn-elektro.de, www.abn-elektro.de

All Rights Reserved
Printed in Germany (12/18)

E-MAMX600_03