Montageanleitung
Instruction sheet

MTS..35..

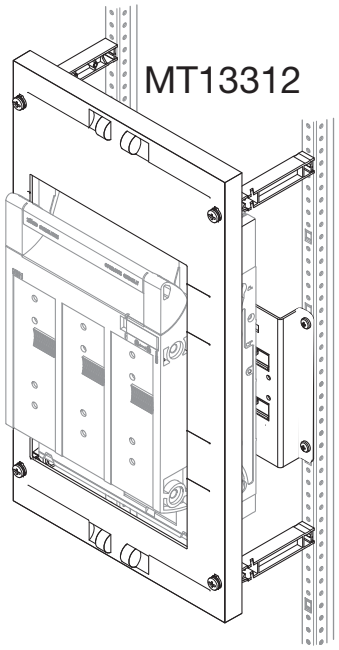

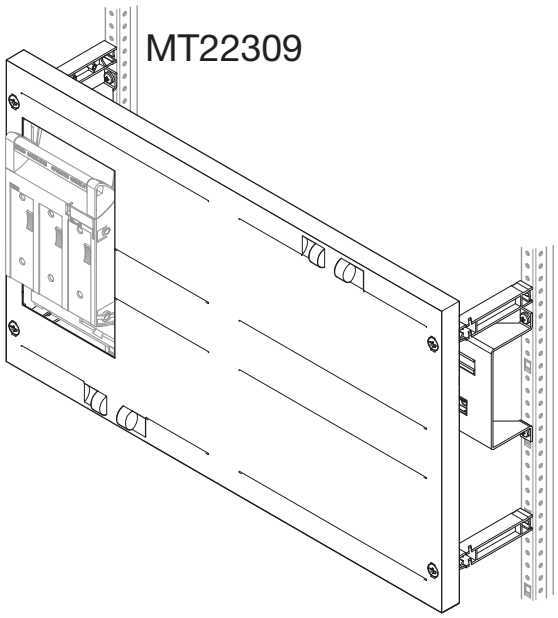



(de) Dieses Produkt muss gemäß der geltenden Standards und Normen installiert und angeschlossen werden.

(en) This product must be installed, connected and used in compliance with prevailing standards and/or installation regulations.

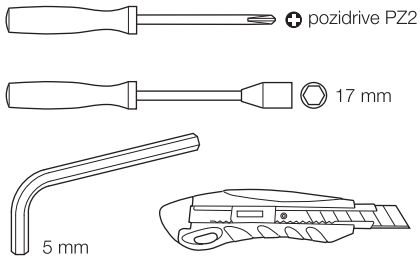

Pos.		MT12309	MT22309	MT13312	MT13322	MT23322	MF12309	MF22309	MF13312	MF13322	MF23322
1 a		1x					1x				
1 b	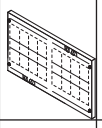		1x					1x			
1 c	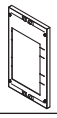			1x	1x				1x	1x	
1 d						1x					1x
2 a							4x	4x	4x	4x	4x
2 b		4x	4x	4x	4x	4x					
3 a	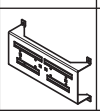	1x									
3 b	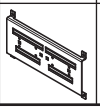						1x				

Pos.		MT12309	MT22309	MT13312	MT13322	MT23322	MF12309	MF22309	MF13312	MF13322	MF23322
4 a	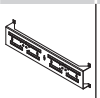		1x								
4 b	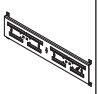							1x			
5 a				1x	1x						
5 b									1x	1x	
6 a	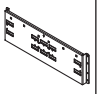					1x					
6 b	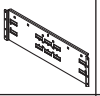										1x
7	 4,8x13	4x	4x	4x	4x	4x	4x	4x	4x	4x	4x
8 a	 M6	4x	8x				4x	8x			
8 b	 M10			4x	4x	8x			4x	4x	8x

1/12

ABN GmbH, Daimlerstraße 10 - 12, D-74196 Neuenstadt,
Fon: +49 (0) 71 39 / 94 - 0, Fax: +49 (0) 71 39 / 94 - 49, E-Mail: abn@abn-elektro.de, www.abn-elektro.de

All Rights Reserved
Printed in Germany (02/17) E-MAMX300_02

1

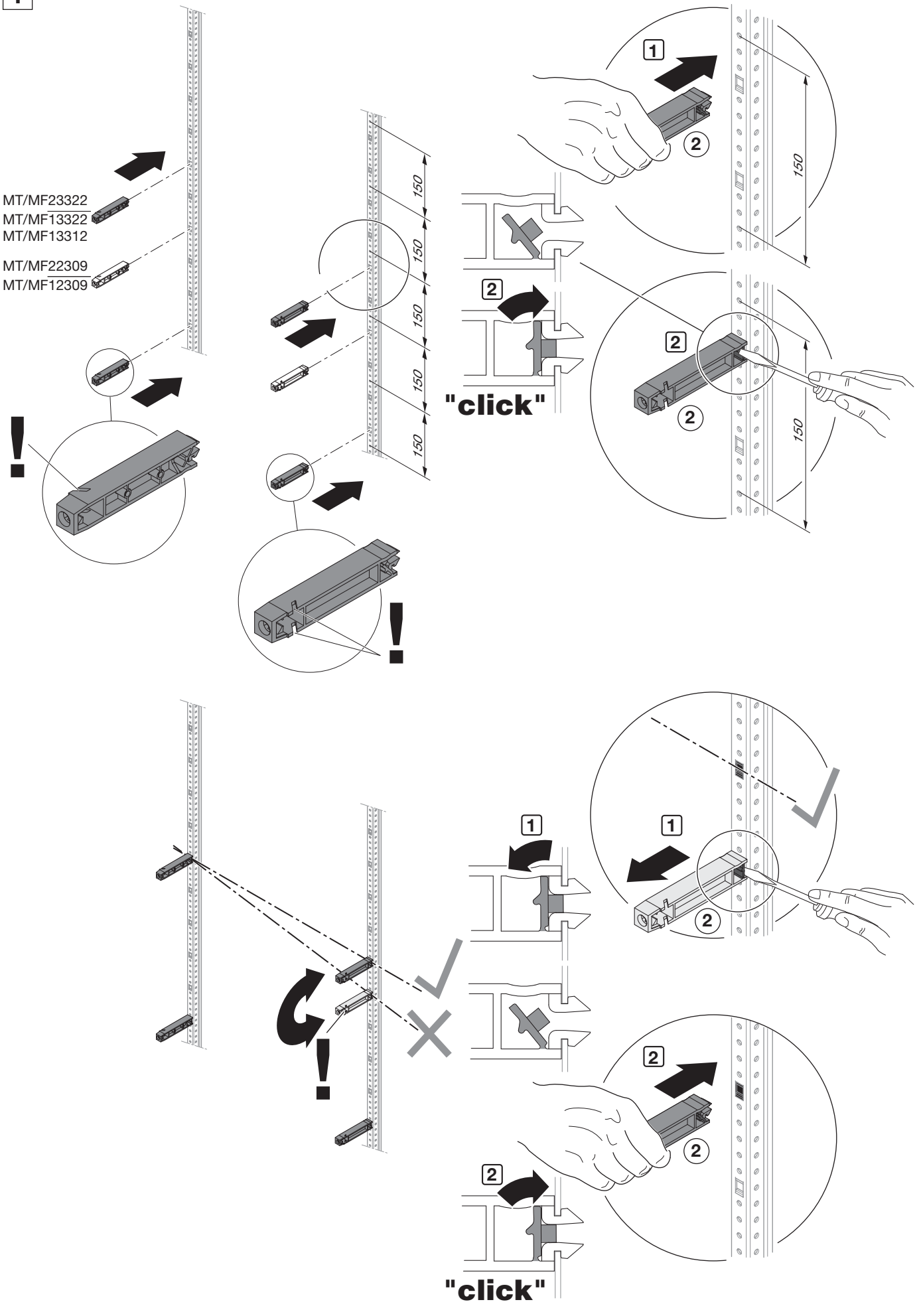

ABN GmbH, Daimlerstraße 10 - 12, D-74196 Neuenstadt,
Fon: +49 (0) 71 39 / 94 - 0, Fax: +49 (0) 71 39 / 94 - 49, E-Mail: abn@abn-elektro.de, www.abn-elektro.de

All Rights Reserved
Printed in Germany (02/17) E-MAMX300_02

2 A MT12309

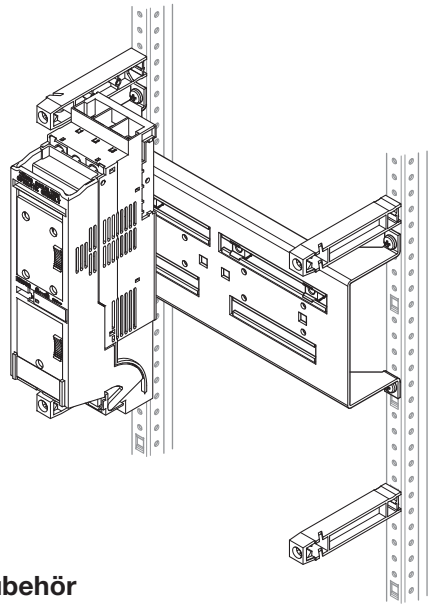

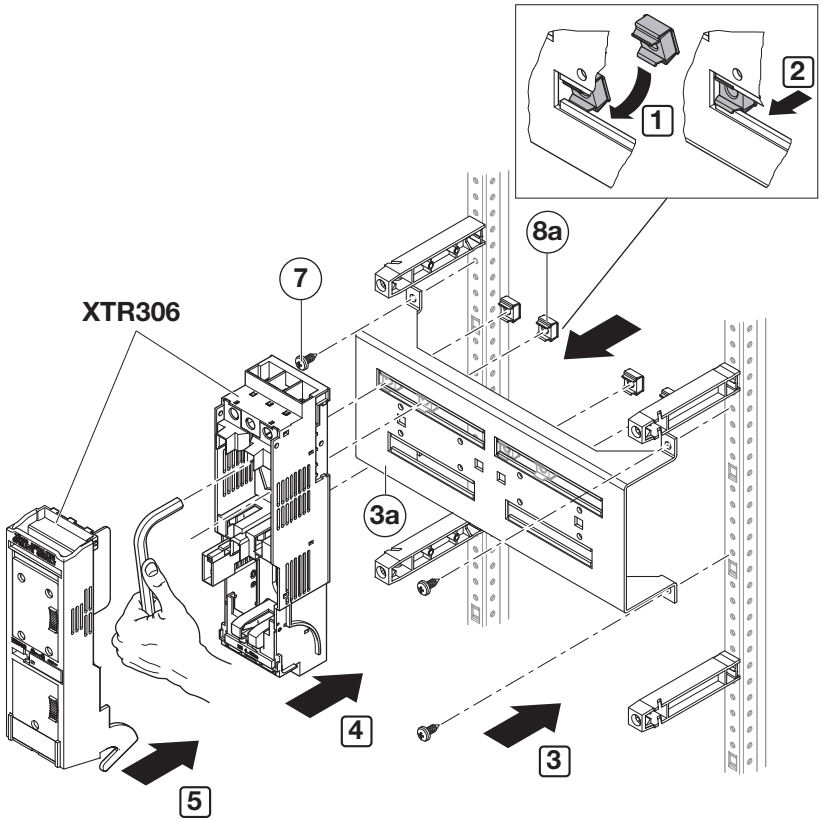

Zubehör
Accessories

		XTR306	XTR309
NH000		1x	
NH00			1x
M6x20		2x	2x

2 B MF12309

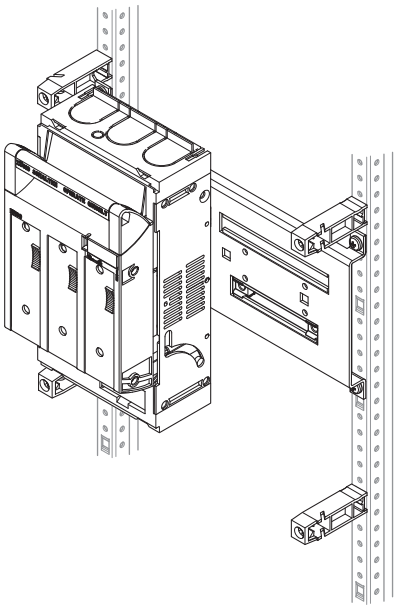

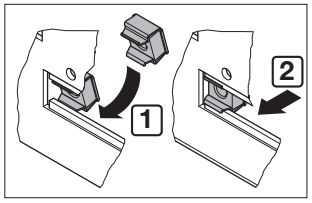

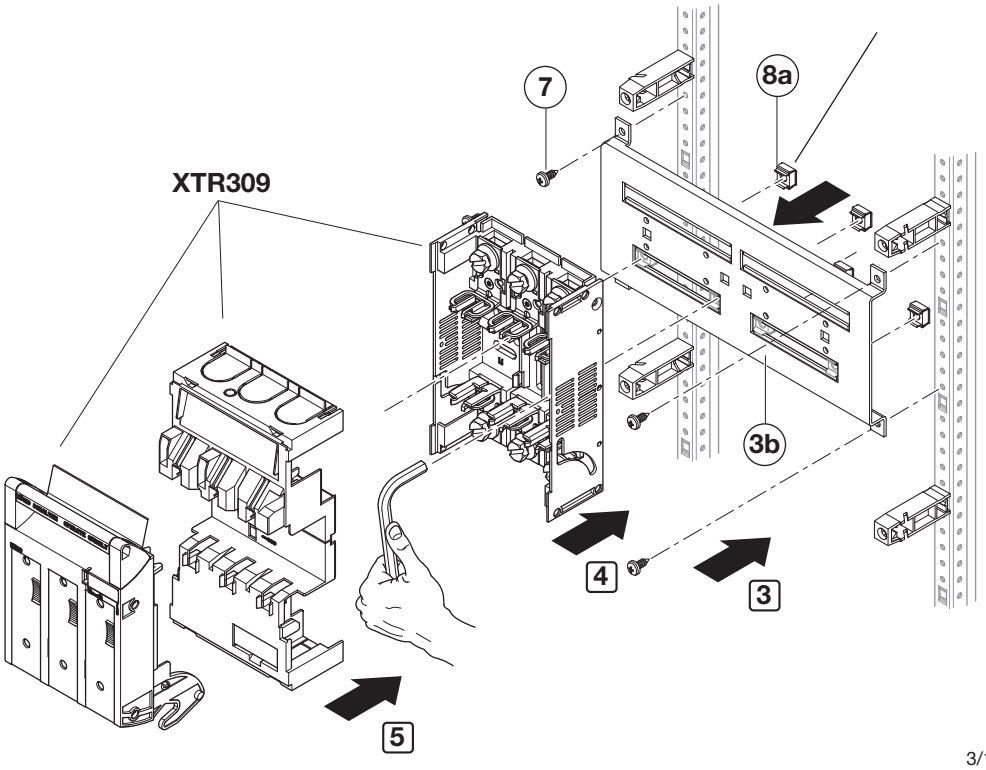

ABN GmbH, Daimlerstraße 10 - 12, D-74196 Neuenstadt,
Fon: +49 (0) 71 39 / 94 - 0, Fax: +49 (0) 71 39 / 94 - 49, E-Mail: abn@abn-elektro.de, www.abn-elektro.de

All Rights Reserved
Printed in Germany (02/17) E-MAMX300_02

3 **A/B** MT/MF12309

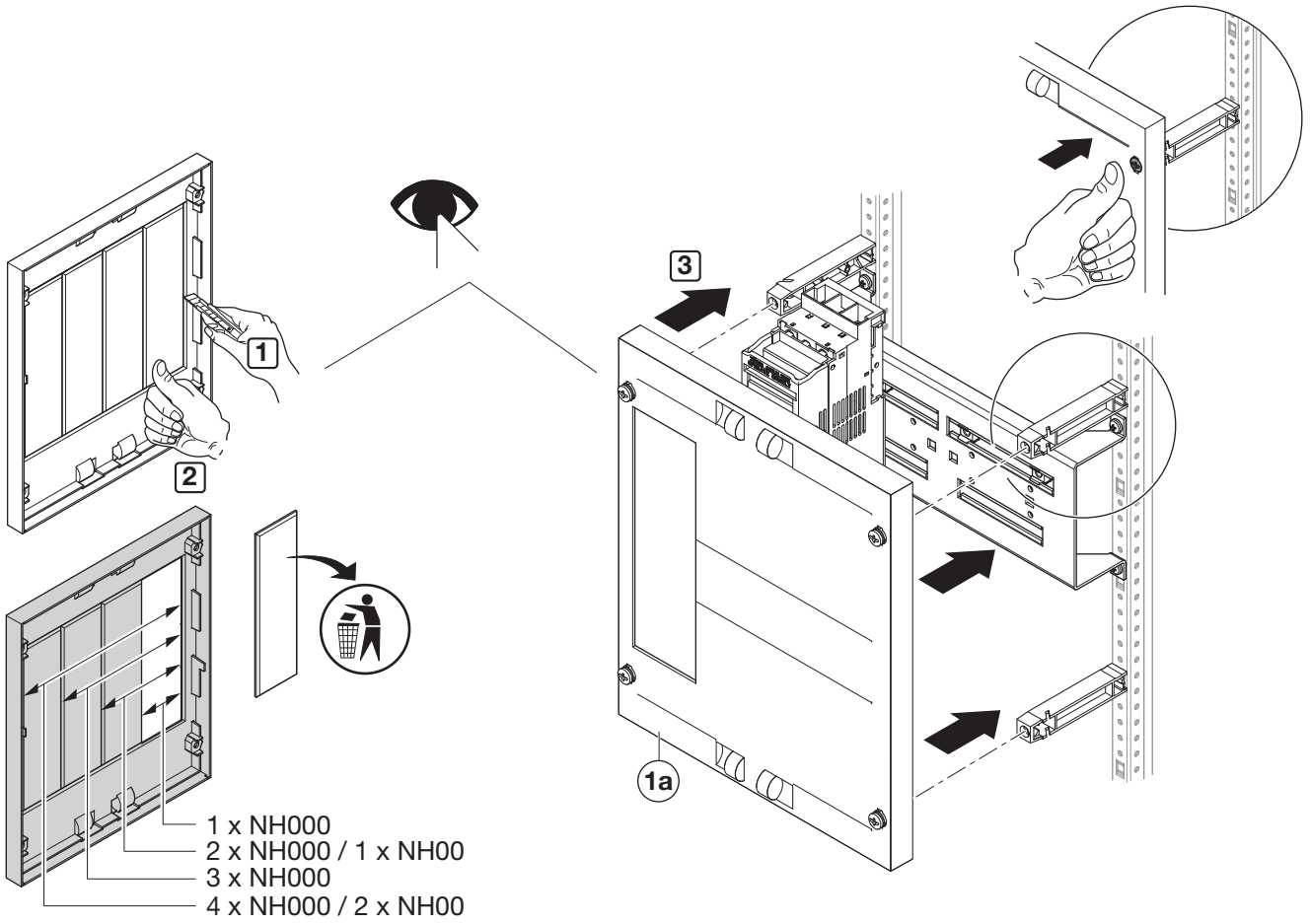

4 **A/B** MT/MF12309

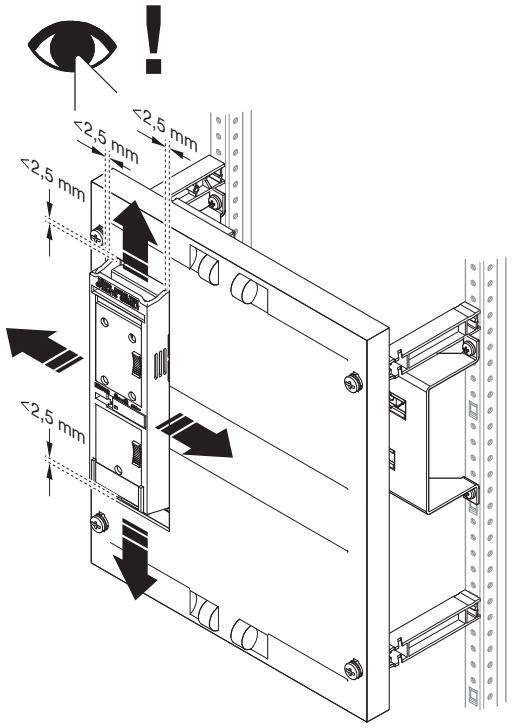

1 **A/B** MT/MF12309

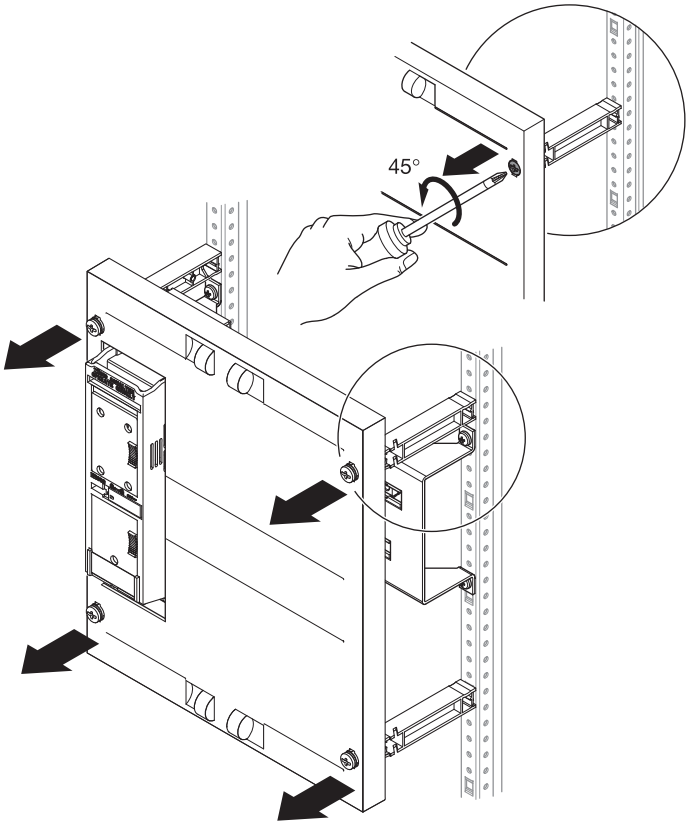

ABN GmbH, Daimlerstraße 10 - 12, D-74196 Neuenstadt,
Fon: +49 (0) 71 39 / 94 - 0, Fax: +49 (0) 71 39 / 94 - 49, E-Mail: abn@abn-elektro.de, www.abn-elektro.de

All Rights Reserved
Printed in Germany (02/17) E-MAMX300_02

2 C MT22309

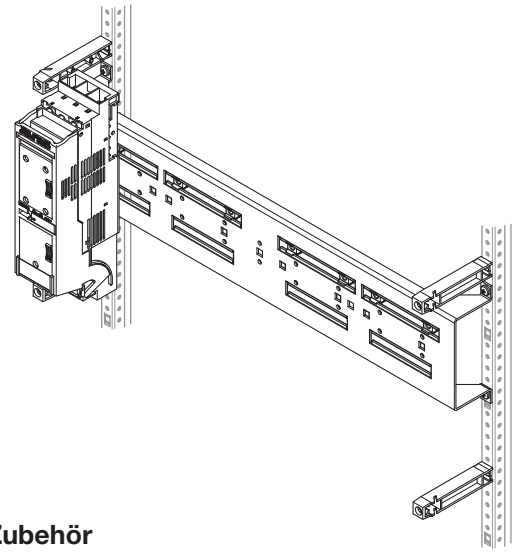

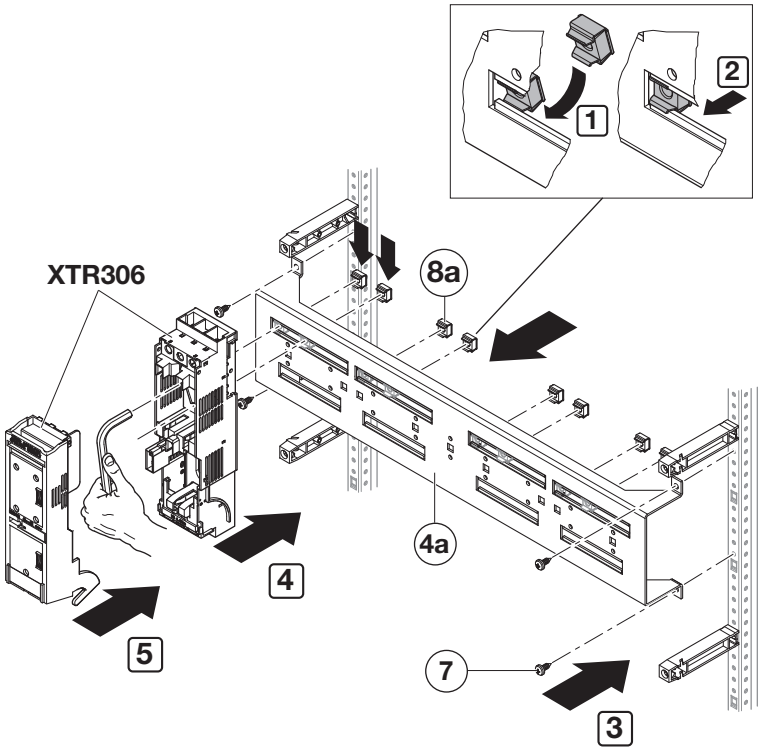

Zubehör
Accessories

		XTR306	XTR309
NH000		1x	
NH00			1x
M6x20		2x	2x

2 D MF22309

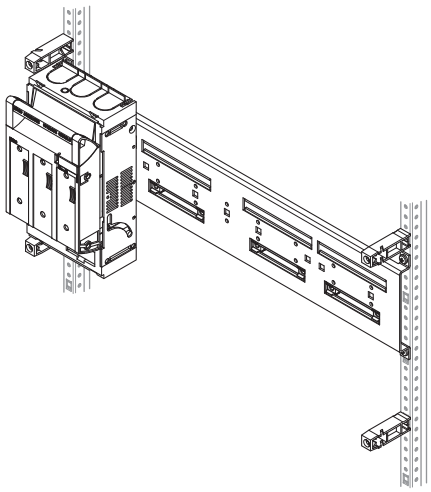

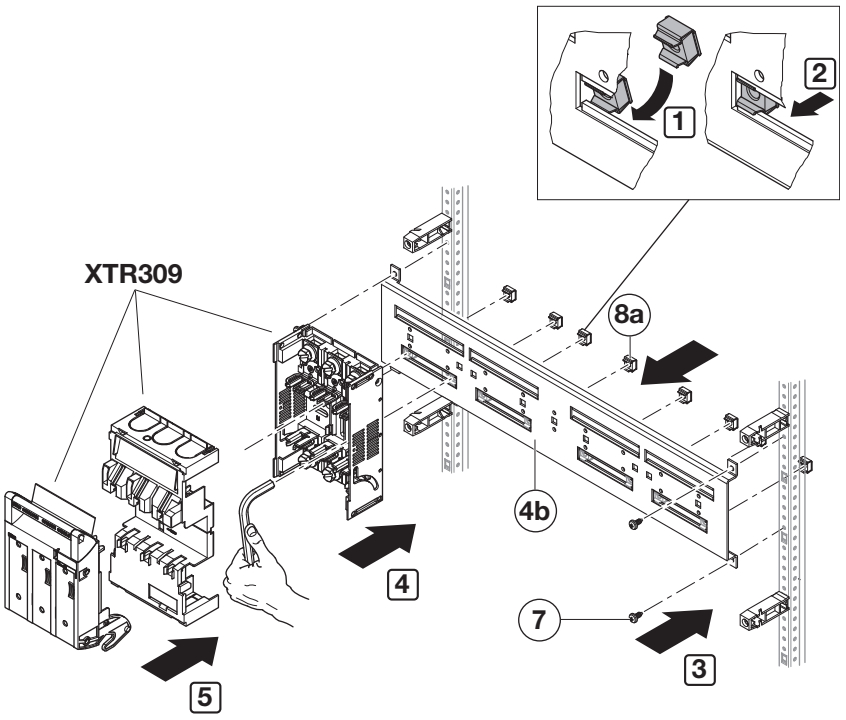

ABN GmbH, Daimlerstraße 10 - 12, D-74196 Neuenstadt,
Fon: +49 (0) 71 39 / 94 - 0, Fax: +49 (0) 71 39 / 94 - 49, E-Mail: abn@abn-elektro.de, www.abn-elektro.de

All Rights Reserved
Printed in Germany (02/17) E-MAMX300_02

3 C/D MT/MF22309

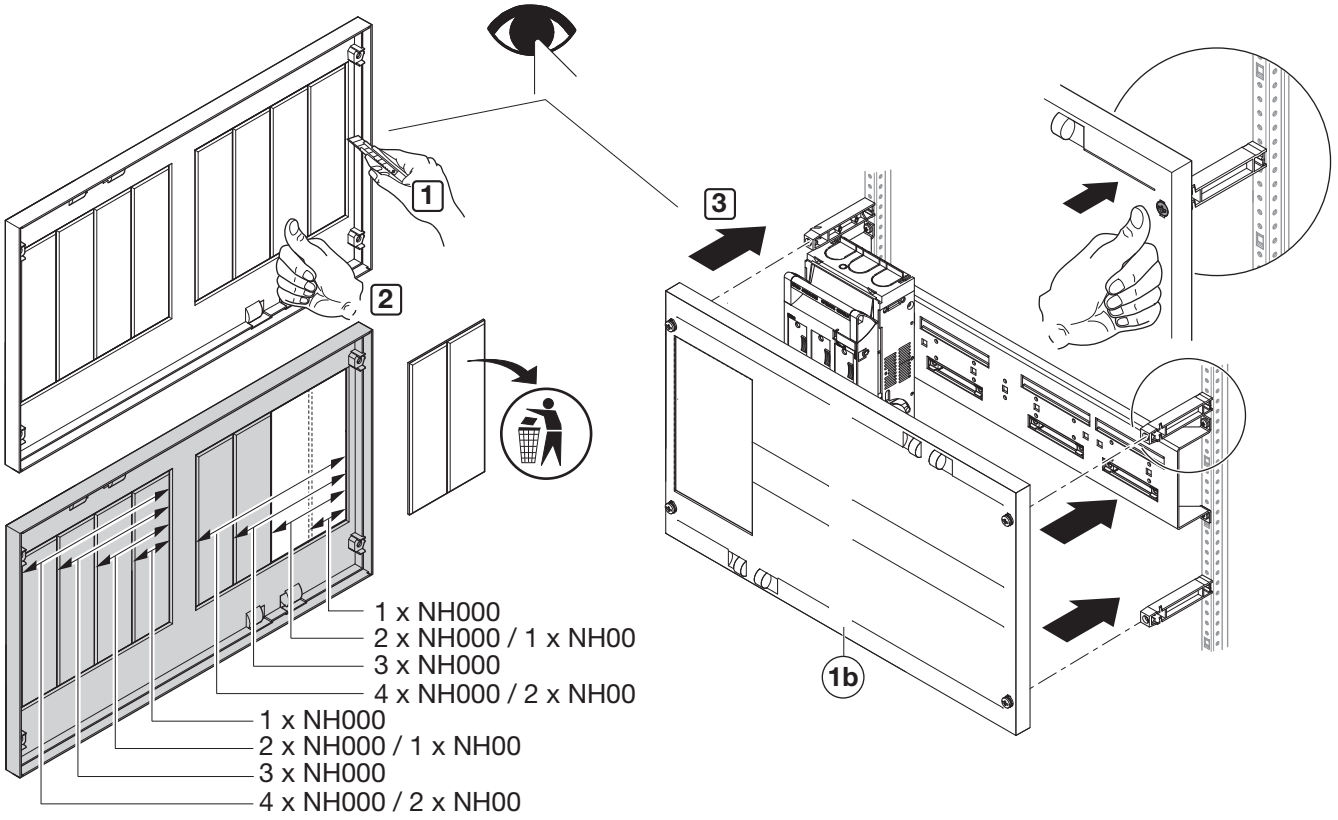

4 C/D MT/MF22309

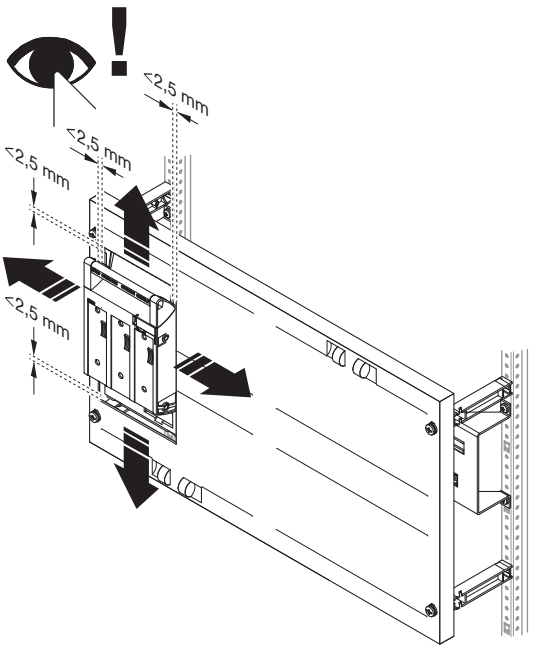

1 C/D MT/MF22309

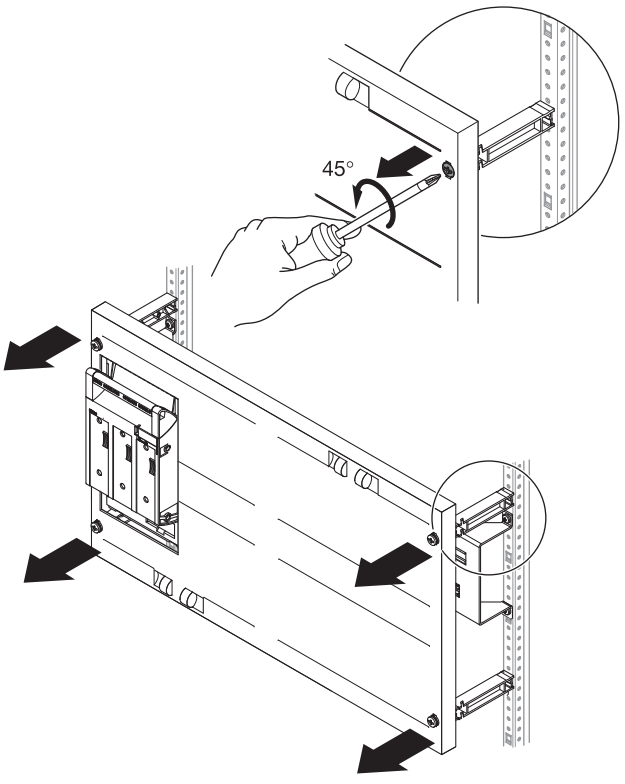

ABN GmbH, Daimlerstraße 10 - 12, D-74196 Neuenstadt,
Fon: +49 (0) 71 39 / 94 - 0, Fax: +49 (0) 71 39 / 94 - 49, E-Mail: abn@abn-elektro.de, www.abn-elektro.de

All Rights Reserved
Printed in Germany (02/17) E-MAMX300_02

2 E MT13312

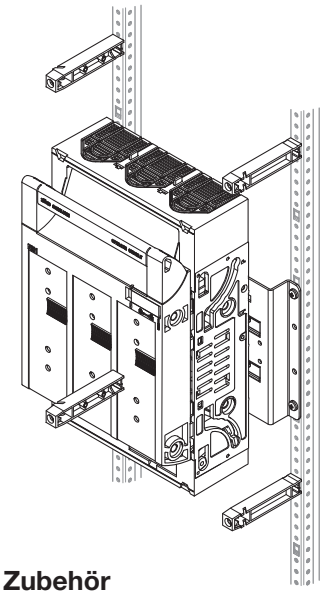

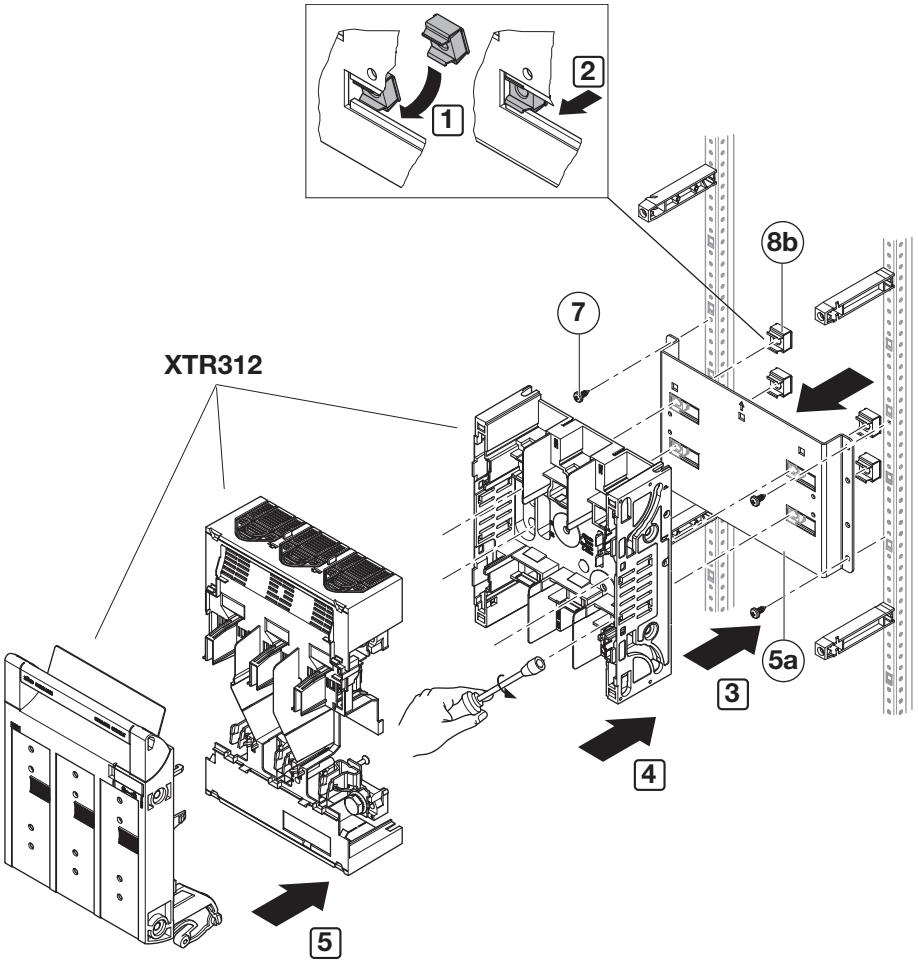

Zubehör
Accessories

		XTR312
NH1		1x
M10x35		4x
M10		4x

2 F MF13312

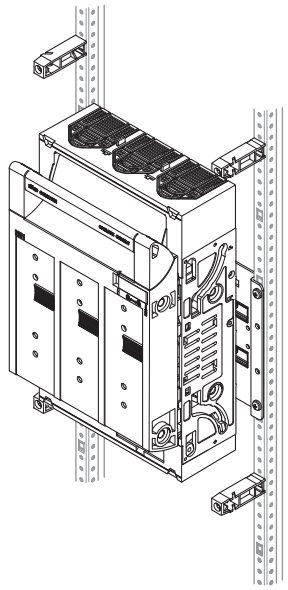

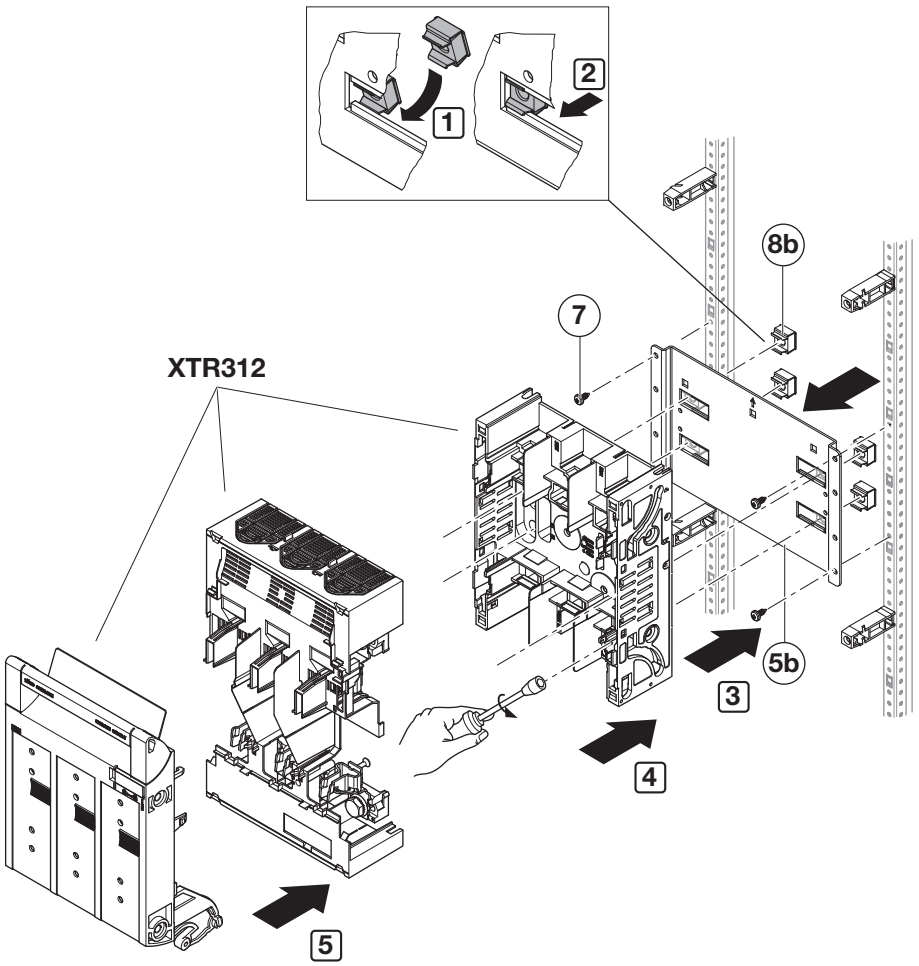

7/12

ABN GmbH, Daimlerstraße 10 - 12, D-74196 Neuenstadt,
Fon: +49 (0) 71 39 / 94 - 0, Fax: +49 (0) 71 39 / 94 - 49, E-Mail: abn@abn-elektro.de, www.abn-elektro.de

All Rights Reserved
Printed in Germany (02/17) E-MAMX300_02

3 E/F MT/MF13312

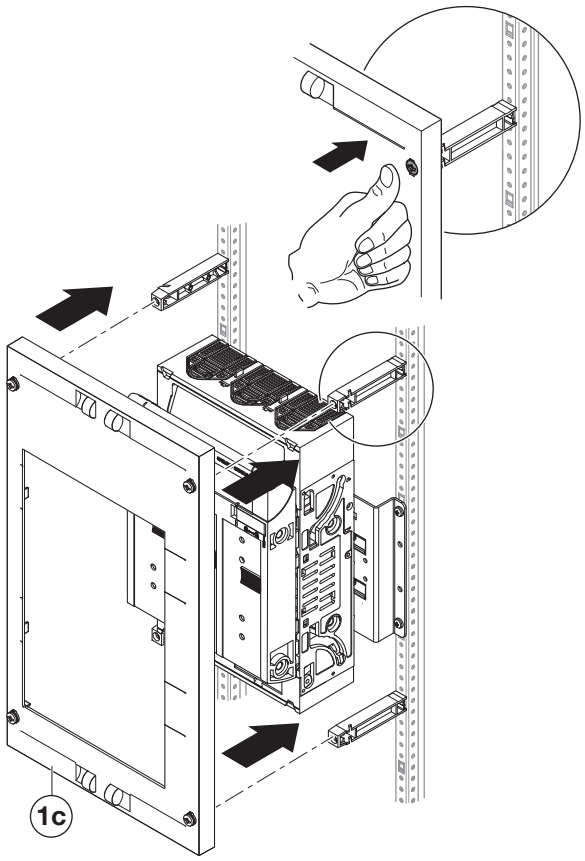

4 E/F MT/MF13312

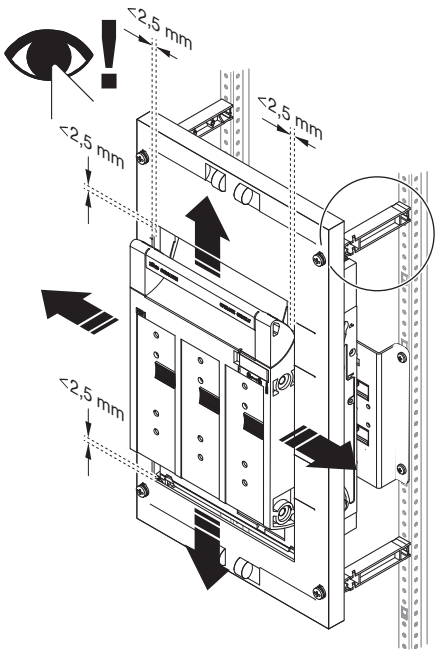

1 E/F MT/MF13312

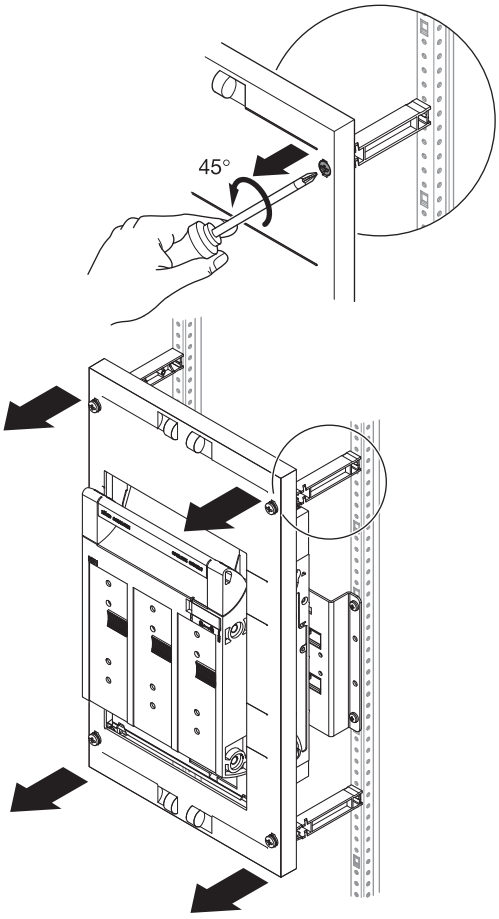

ABN GmbH, Daimlerstraße 10 - 12, D-74196 Neuenstadt,
Fon: +49 (0) 71 39 / 94 - 0, Fax: +49 (0) 71 39 / 94 - 49, E-Mail: abn@abn-elektro.de, www.abn-elektro.de

All Rights Reserved
Printed in Germany (02/17) E-MAMX300_02

2 G MT13322

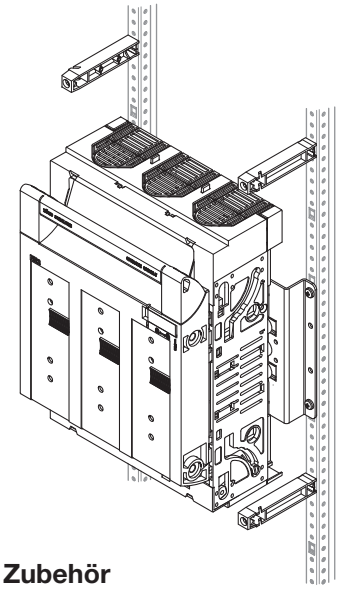

Zubehör
Accessories

		XTR322
NH2		1x
M10x35		4x
M10		4x

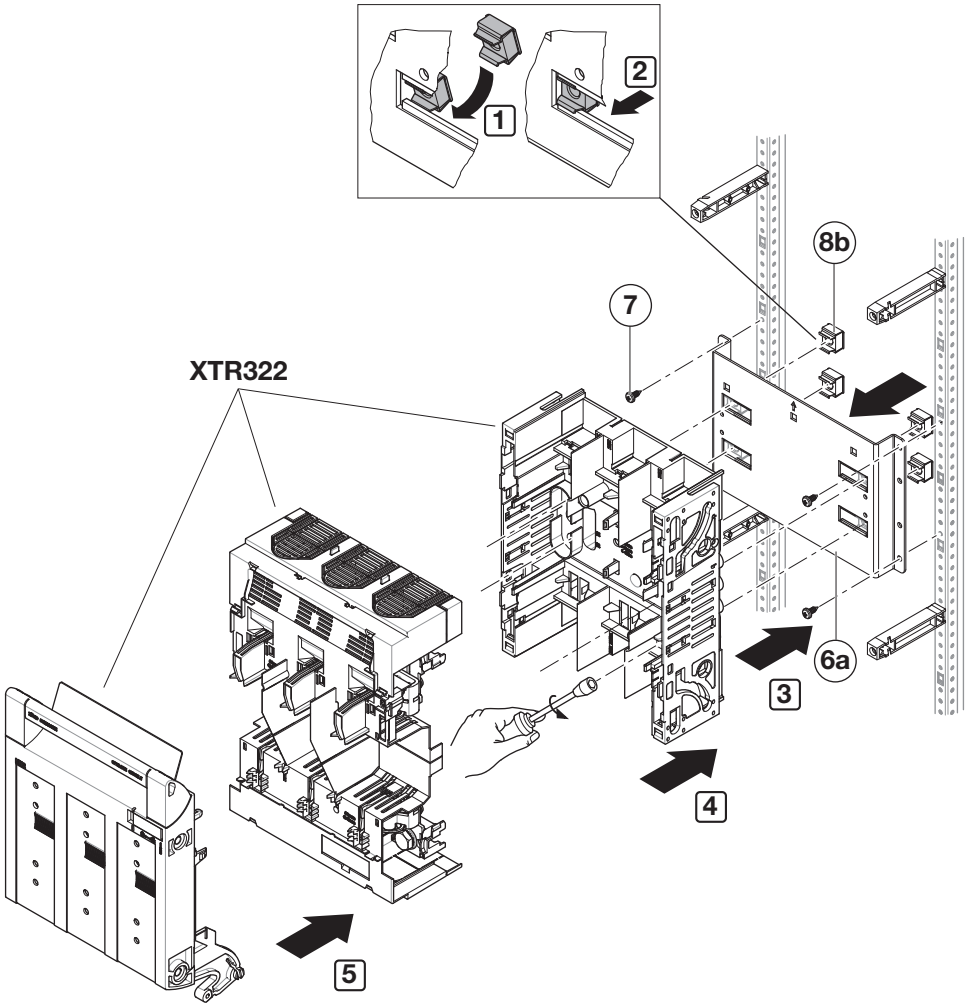

2 H MF13322

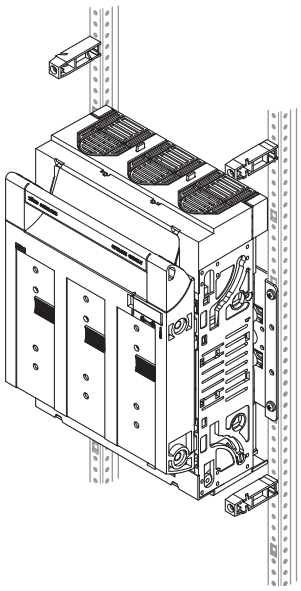

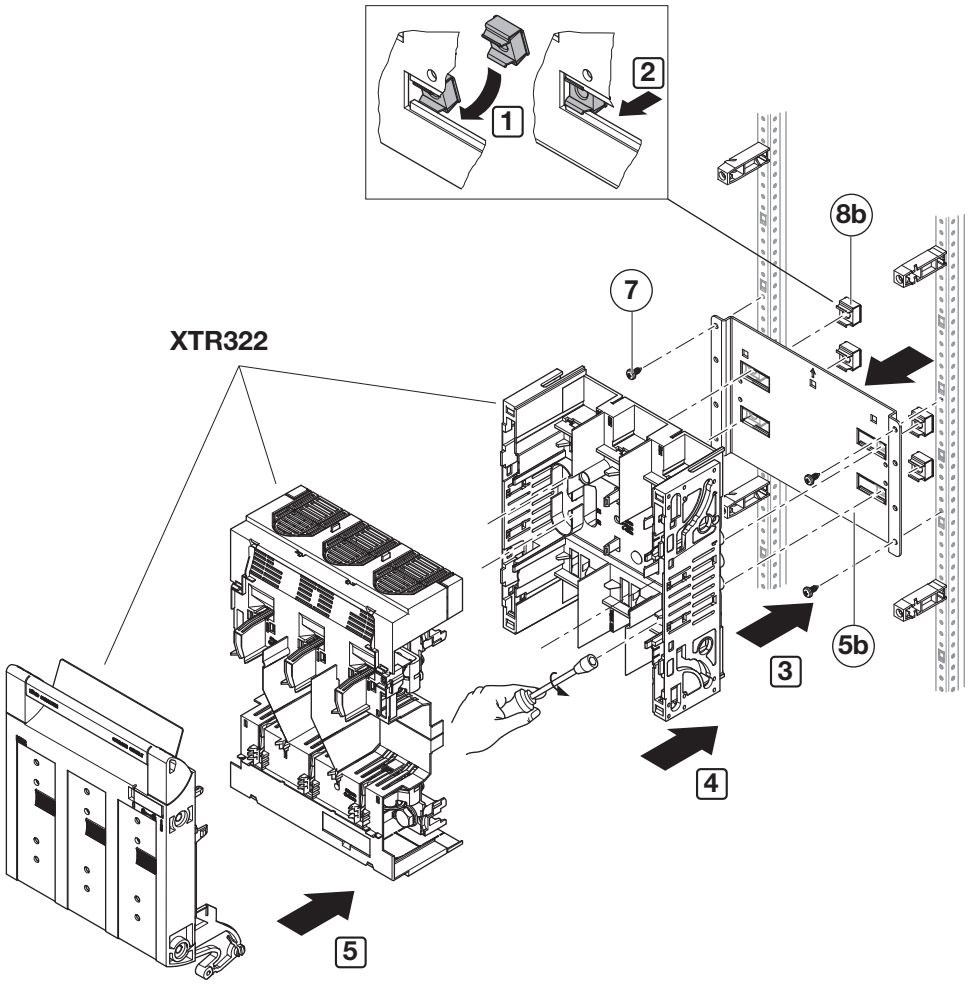

ABN GmbH, Daimlerstraße 10 - 12, D-74196 Neuenstadt,
Fon: +49 (0) 71 39 / 94 - 0, Fax: +49 (0) 71 39 / 94 - 49, E-Mail: abn@abn-elektro.de, www.abn-elektro.de

All Rights Reserved
Printed in Germany (02/17) E-MAMX300_02

3 **G/H** MT/MF13322

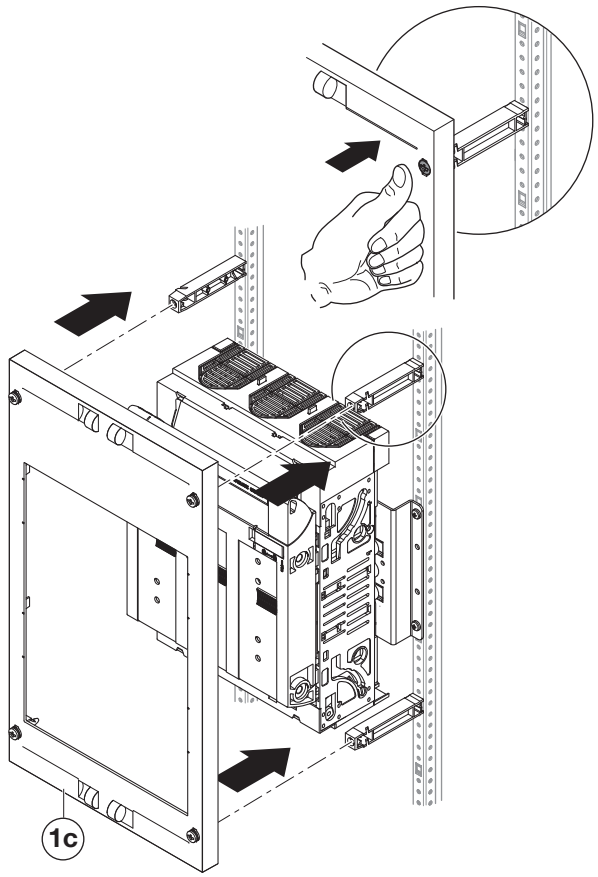

4 **G/H** MT/MF13322

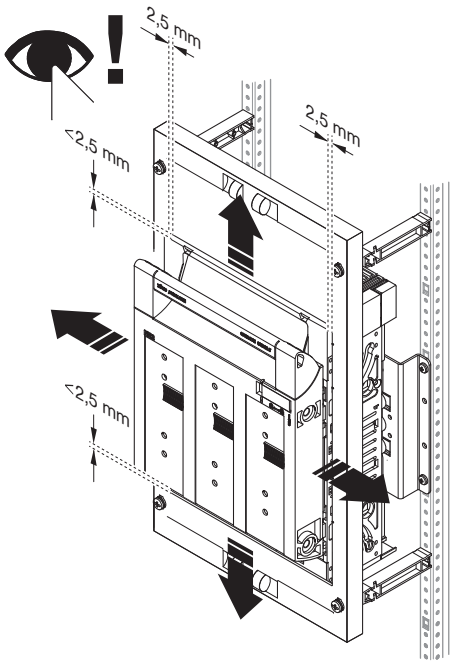

1 **G/H** MT/MF13322

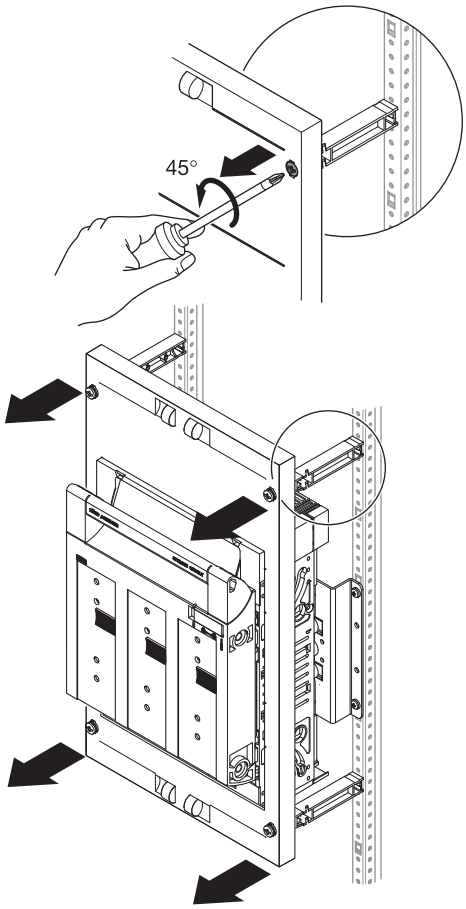

ABN GmbH, Daimlerstraße 10 - 12, D-74196 Neuenstadt,
Fon: +49 (0) 71 39 / 94 - 0, Fax: +49 (0) 71 39 / 94 - 49, E-Mail: abn@abn-elektro.de, www.abn-elektro.de

All Rights Reserved
Printed in Germany (02/17) E-MAMX300_02

2 I MT23322

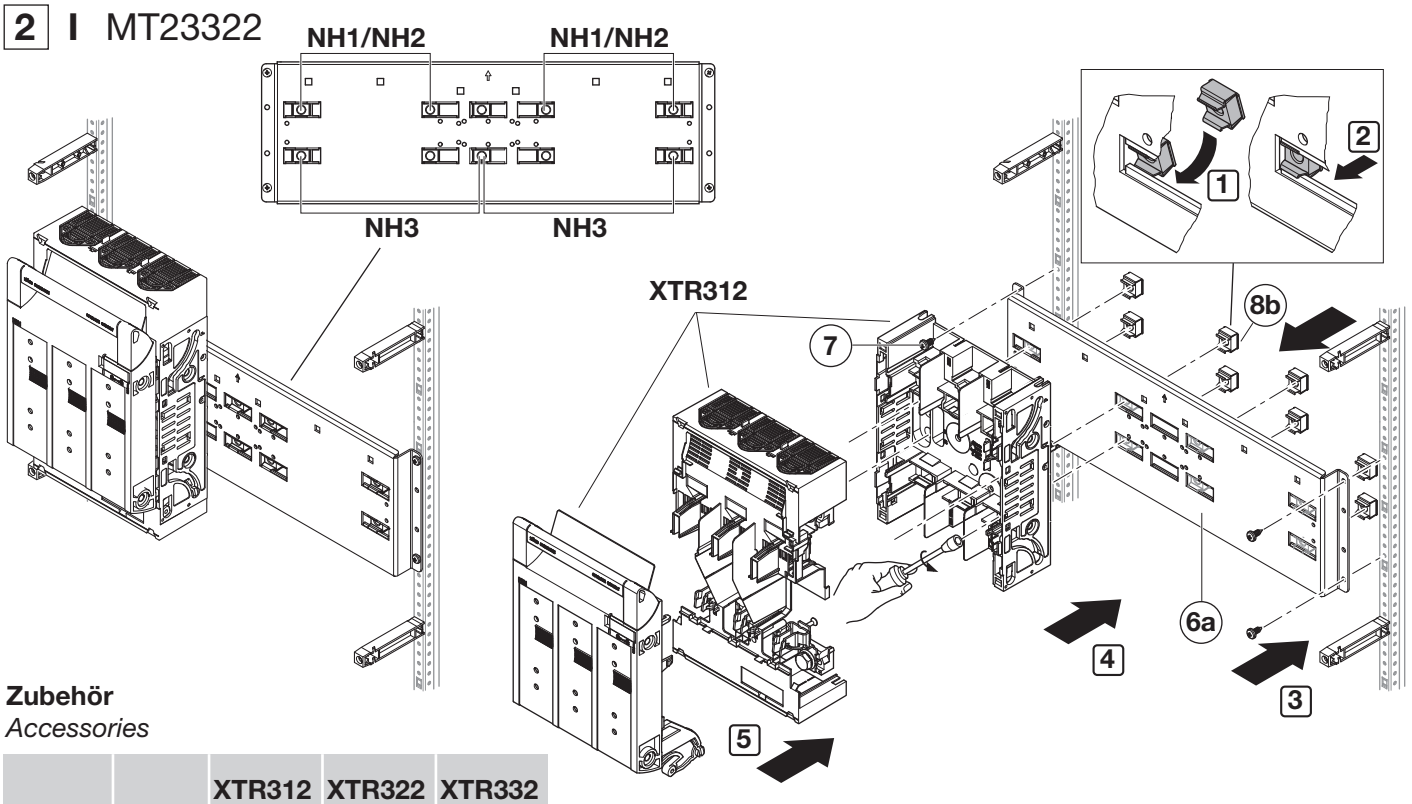

Zubehör
Accessories

		XTR312	XTR322	XTR332
NH1		1x		
NH2			1x	
NH3				1x
M10x35		4x	4x	4x
M10		4x	4x	4x

2 J MF23322

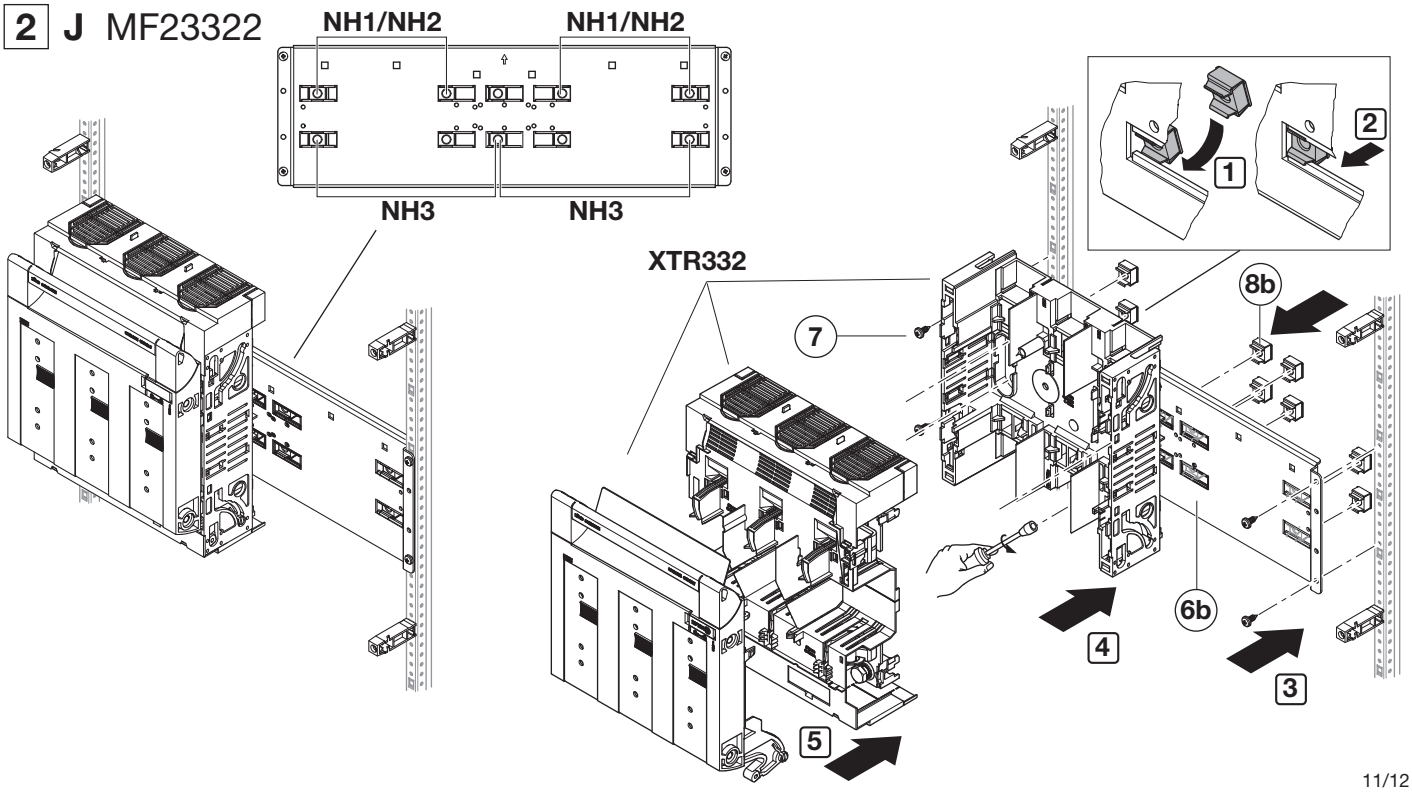

11/12

ABN GmbH, Daimlerstraße 10 - 12, D-74196 Neuenstadt,
Fon: +49 (0) 71 39 / 94 - 0, Fax: +49 (0) 71 39 / 94 - 49, E-Mail: abn@abn-elektro.de, www.abn-elektro.de

All Rights Reserved
Printed in Germany (02/17) E-MAMX300_02

3 I/J MT/MF23322

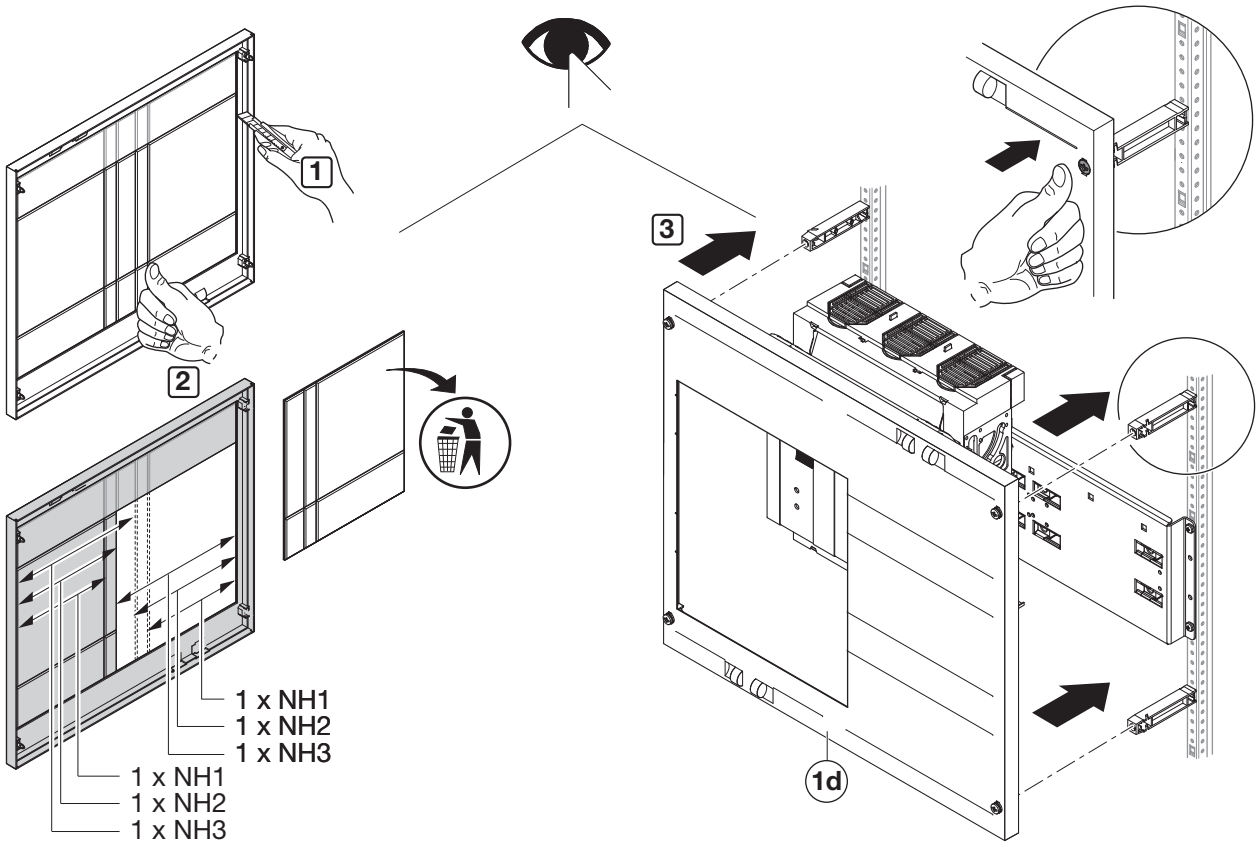

4 I/J MT/MF23322

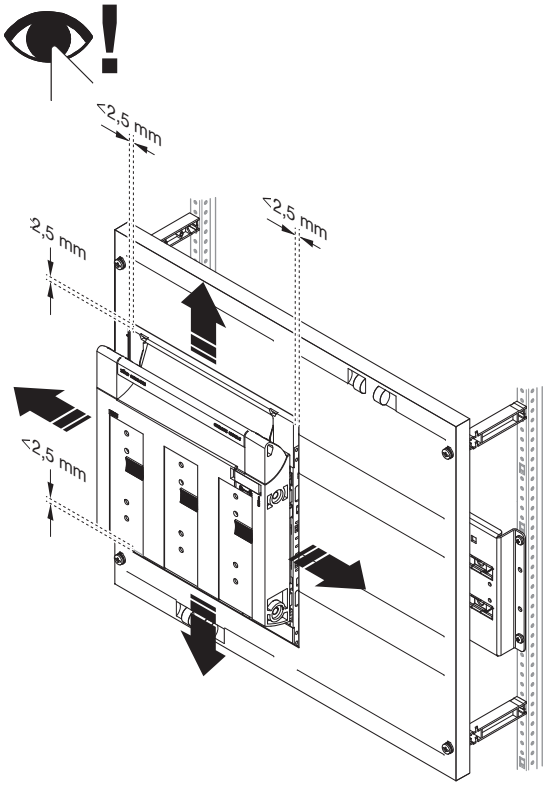

1 I/J MT/MF23322

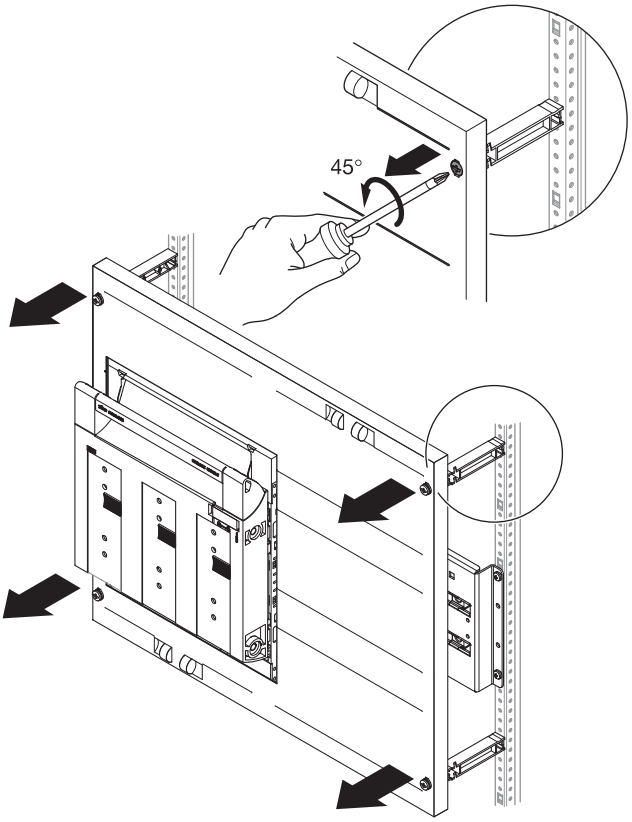

ABN GmbH, Daimlerstraße 10 - 12, D-74196 Neuenstadt,
Fon: +49 (0) 71 39 / 94 - 0, Fax: +49 (0) 71 39 / 94 - 49, E-Mail: abn@abn-elektro.de, www.abn-elektro.de

All Rights Reserved
Printed in Germany (02/17) E-MAMX300_02