1

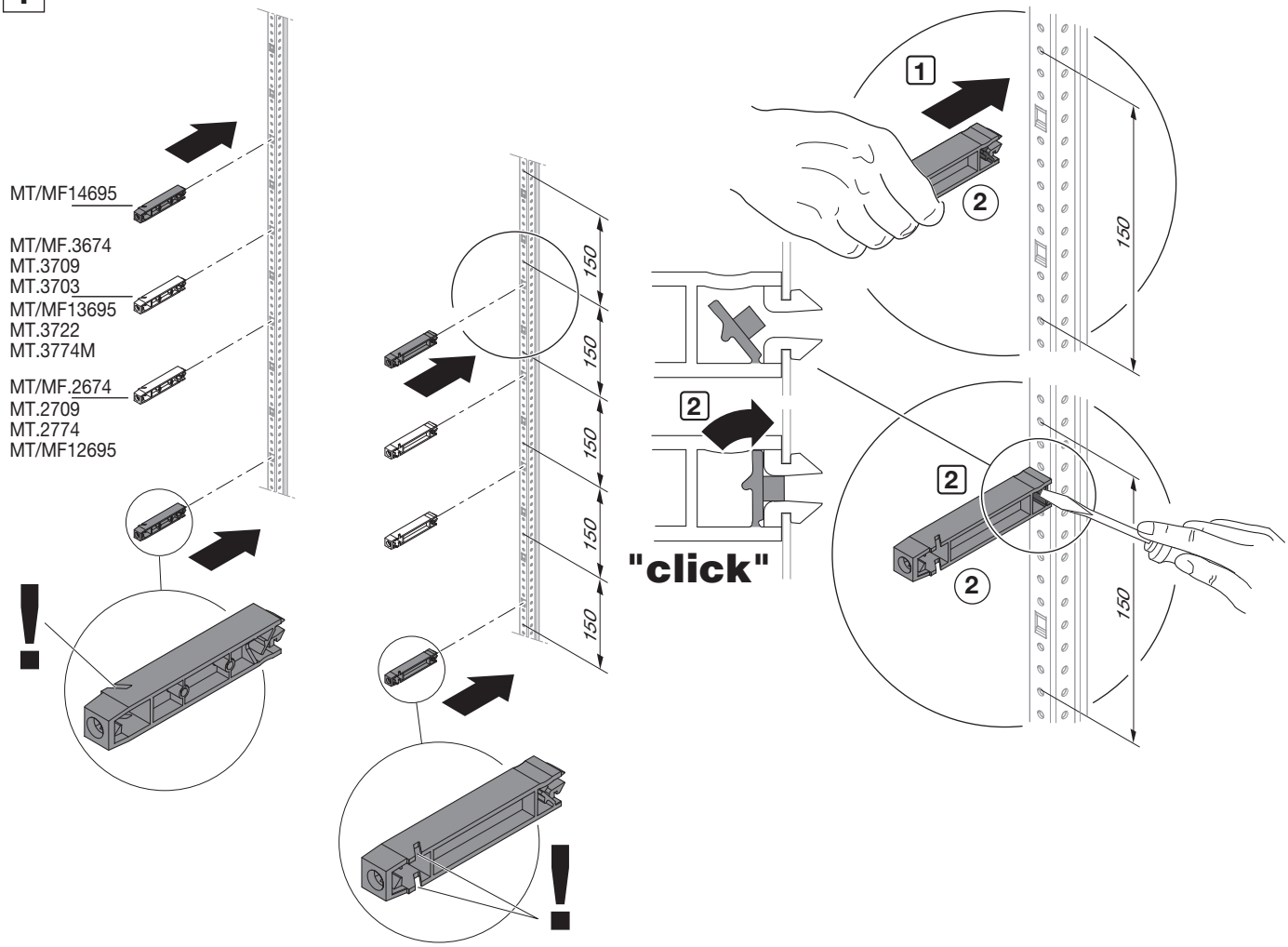

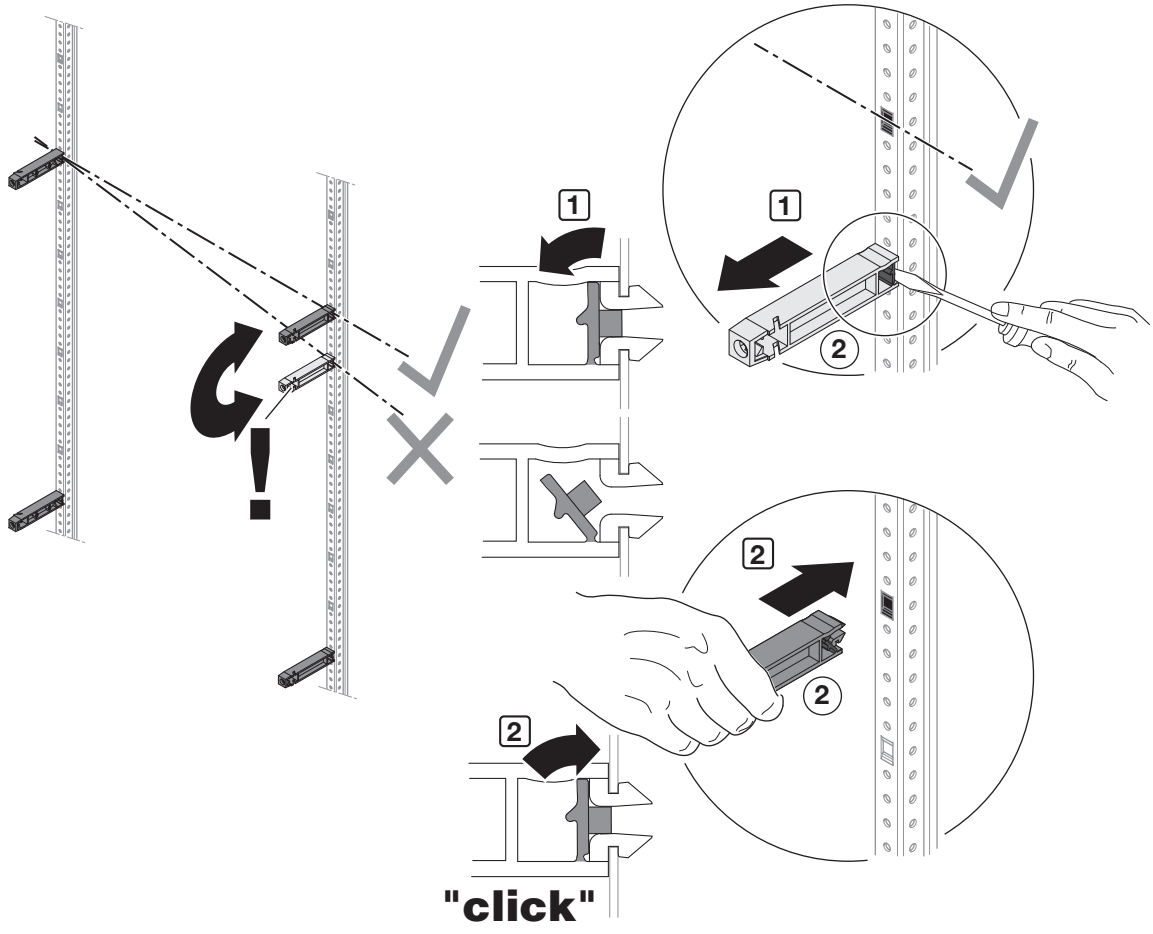

ABN GmbH, Daimlerstraße 10 - 12, D-74196 Neuenstadt,
Fon: +49 (0) 71 39 / 94 - 0, Fax: +49 (0) 71 39 / 94 - 49, E-Mail: abn@abn-elektro.de, www.abn-elektro.de

All Rights Reserved
Printed in Germany (12/18) E-MAMX600_03

7 B-D MF/MT22674 MF/MT23674

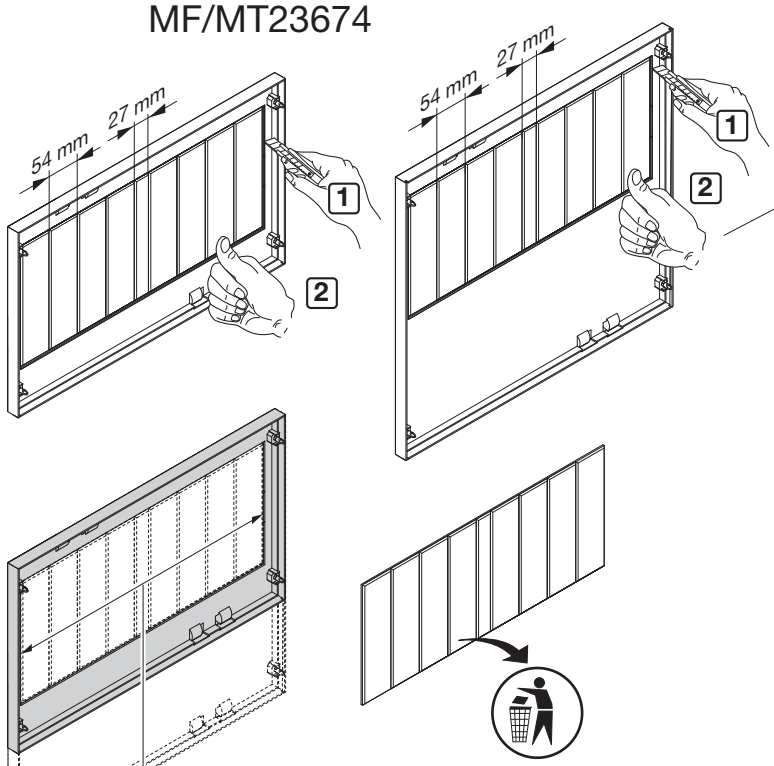

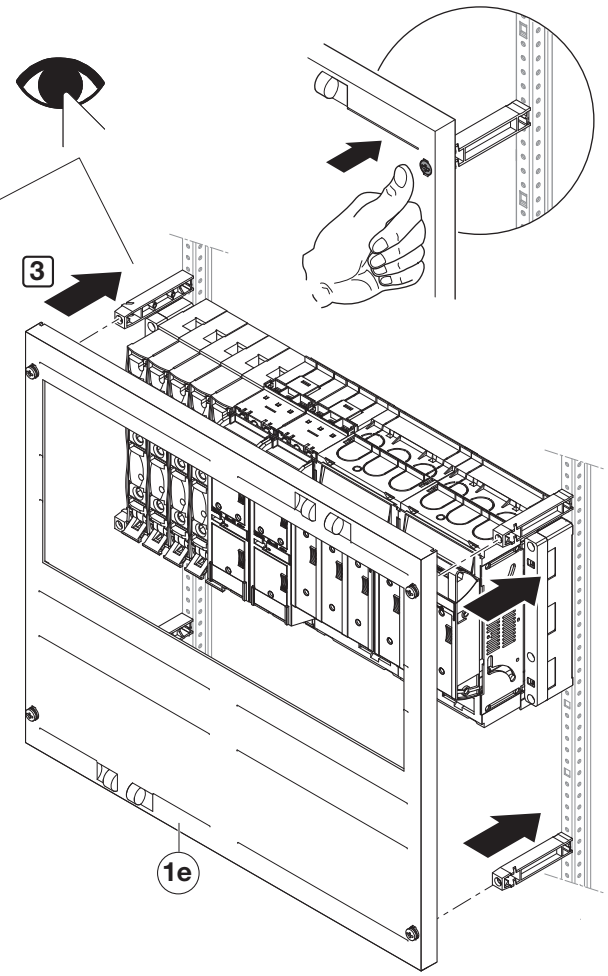

Beispiel
Example
17 x 27 mm (D02)
8 x 54 mm (NH000)
4 x 108 mm (NH00)

8 B-D MF/MT22674 MF/MT23674

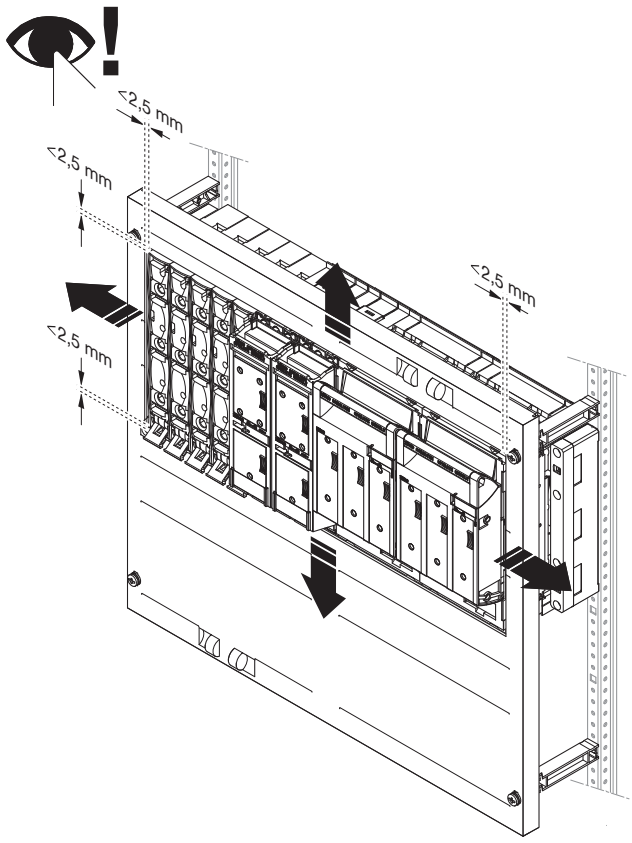

1 B-D MF/MT22674 MF/MT23674

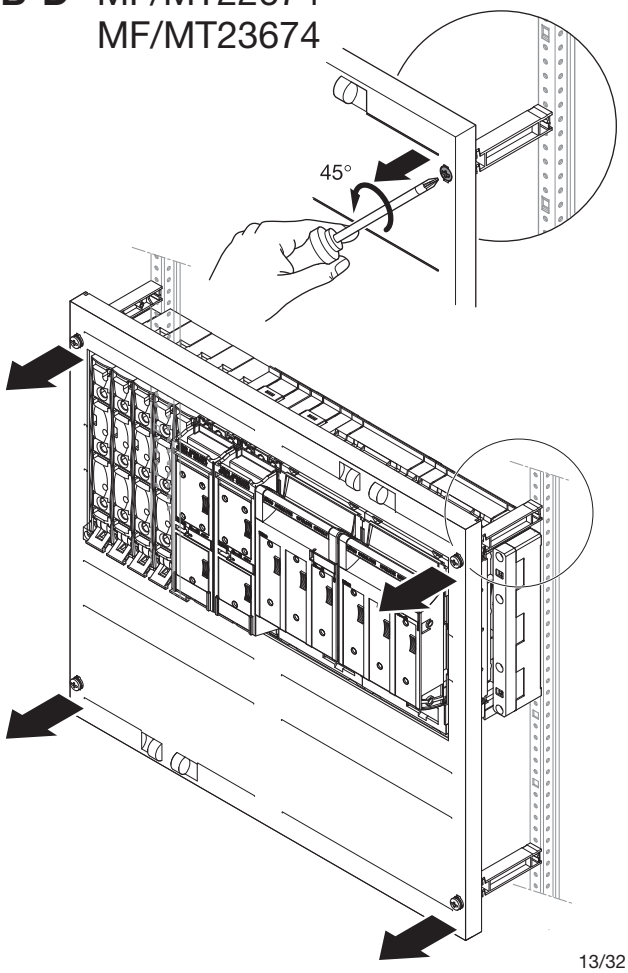

ABN GmbH, Daimlerstraße 10 - 12, D-74196 Neuenstadt,
Fon: +49 (0) 71 39 / 94 - 0, Fax: +49 (0) 71 39 / 94 - 49, E-Mail: abn@abn-elektro.de, www.abn-elektro.de

All Rights Reserved
Printed in Germany (12/18)

E-MAMX600_03