1

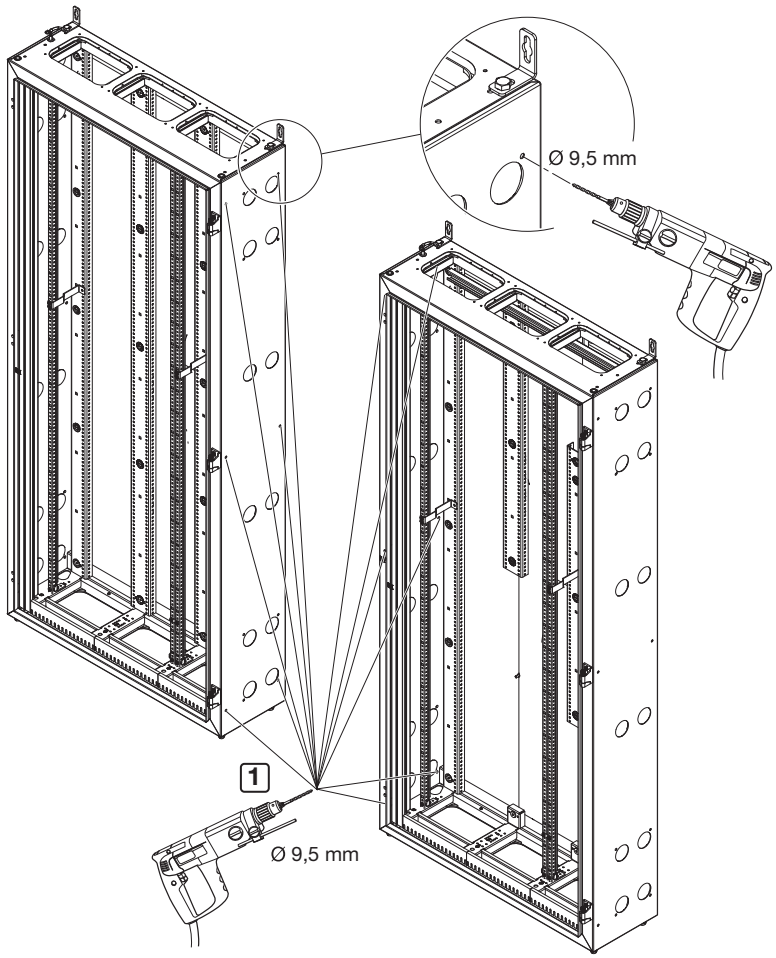

2

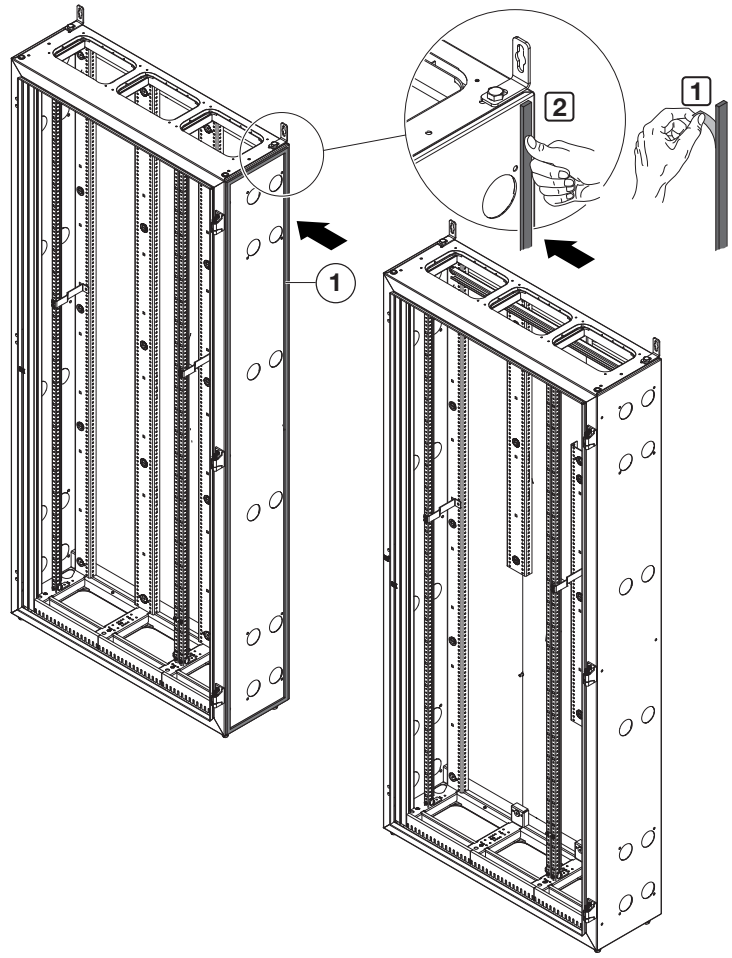

Zubehör
Accessories

Pos.		NEVS	NPVS
1	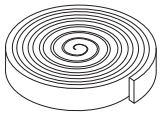	1x	1x
2a	 M6	6x	
2b	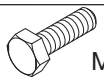 M8		6x
3		6x	
4a	 M6	6x	
4b	 M8		6x
5a	 M6	6x	
5b	 M8		6x

ABN GmbH, Daimlerstraße 10 - 12, D-74196 Neuenstadt,
Fon: +49 (0) 71 39 / 94 - 0, Fax: +49 (0) 71 39 / 94 - 49, E-Mail: de-abn-zentrale@se.com, www.abn-elektro.de

All Rights Reserved
Printed in Germany (03/21)

3 N.VS

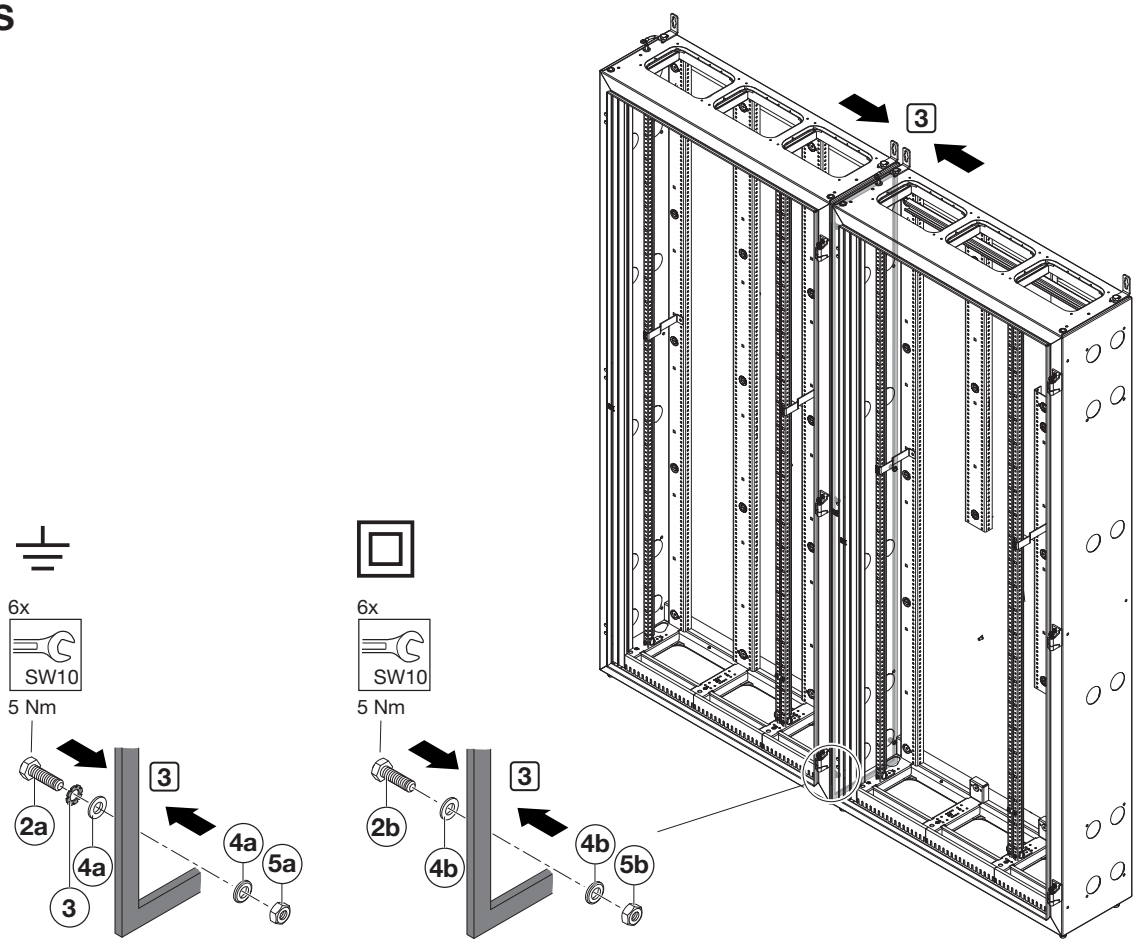

3 NT..PB NS..PB

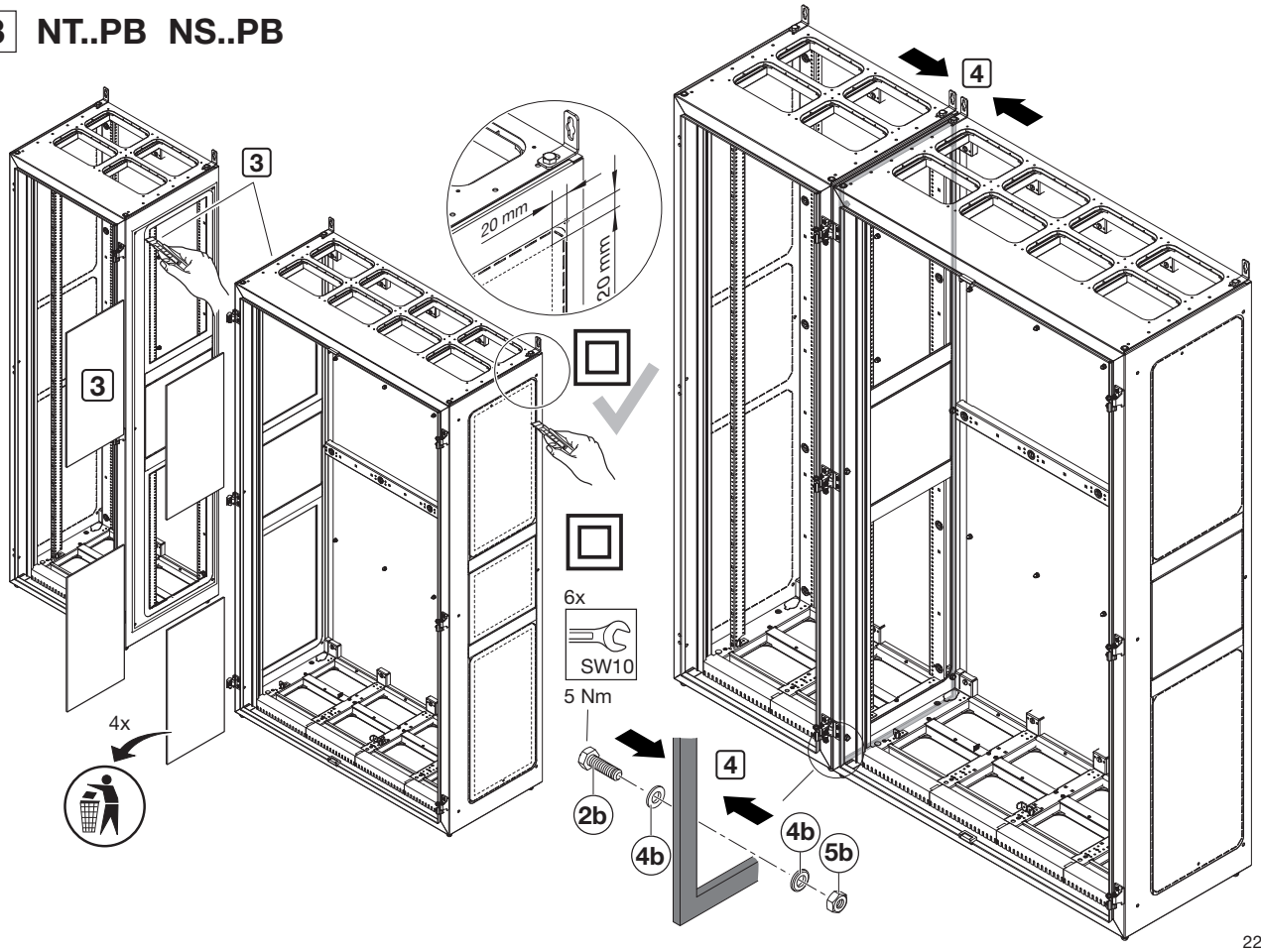

ABN GmbH, Daimlerstraße 10 - 12, D-74196 Neuenstadt,
Fon: +49 (0) 71 39 / 94 - 0, Fax: +49 (0) 71 39 / 94 - 49, E-Mail: de-abn-zentrale@se.com, www.abn-elektro.de

All Rights Reserved
Printed in Germany (03/21) E-MANX_05