EV CHARGING STATION FOUNDATION – GEN 2

FOR LEVEL 2 CHARGERS

INSTALLATION INSTRUCTIONS



⚠ IMPORTANT SAFETY INFORMATION

READ AND COMPLETELY UNDERSTAND ALL INSTRUCTIONS BEFORE INSTALLING PRODUCT. FAILURE TO FOLLOW THESE INSTRUCTIONS MAY RESULT IN PERSONAL INJURY OR DEATH.

This product is intended for use by trained technicians only. This product should not be used by anyone who is not familiar with and not trained to use it. When working in the area of energized lines, extra care should be taken to prevent accidental electrical contact. Be sure to wear proper safety equipment per your company protocol. These instructions are not intended to supersede any company construction or safety standards. These instructions are offered only to illustrate safe installation for the individual. PLP products are intended for the specified application only. Do not modify this product under any circumstances. Do not reuse or reinstall any PLP product unless that capability is expressly indicated in the product's Installation Instructions. For proper performance and personal safety, be sure to select the proper PLP product before installation. PLP products are precision devices. To ensure proper performance, they should be stored in cartons under cover and handled carefully.

PACKAGE COMPONENTS

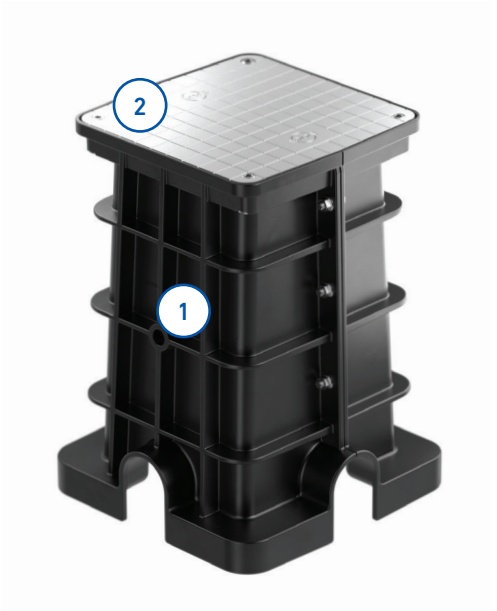

1. Foundation Base
2. Cast Aluminum Lid
3. Lid Bolts (4) (Not Pictured)

Tools Required:

- Back hoe or shovel(s)
- M10 Allen Wrench
- Assorted drill bits
- Metal cutting hole saw with arbor for conduit pass through

⚠ WARNING

1. Always check with local codes to ensure compliance. You may need to adjust the guidelines provided here to comply with local regulations.
2. **ALWAYS CALL BEFORE YOU DIG**: 811 is the number used most in the U.S.
3. Use only qualified technicians for the task at hand. Improper installation can lead to equipment damage, injury, or even death of persons involved.
4. Follow all instructions for the charger unit being installed.

PREPARATION

1

Prepare the site with substrate dug out to accommodate a hand tamper, 10" (254 mm) oversized, or vibrating plate, 24" (610 mm) oversized, on all sides of the foundation. The foundation is 15" (381 mm) in diameter.

The foundation (Height = 25") requires a minimum gravel base of 6", making the minimum dig depth 31" (25" + 6"). A deeper gravel base is required for frost lines over 25". When the frost line exceeds 25", add 6" to the frost line to determine the proper dig depth.

EXAMPLE: 32" Frost Line + 6" = 38" Dig Depth.

Dig to the appropriate depth for your application (based on the frost line) and backfill with compacted limestone gravel until only 25" (the height of the foundation) remains.

In addition to backfilling with gravel to reach the correct depth, the foundation should also have a minimum of 11" (279 mm) of gravel around its sides. See drawing.

NOTE: Layers of gravel should be compacted every 3" to 6" (76 mm - 152 mm). See Step 3.

PLP recommends using a 3/4" (19 mm) compacted limestone or a locally available bedding stone.

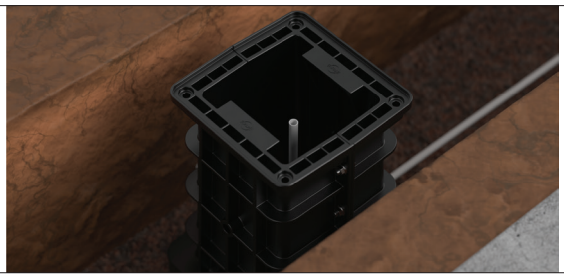

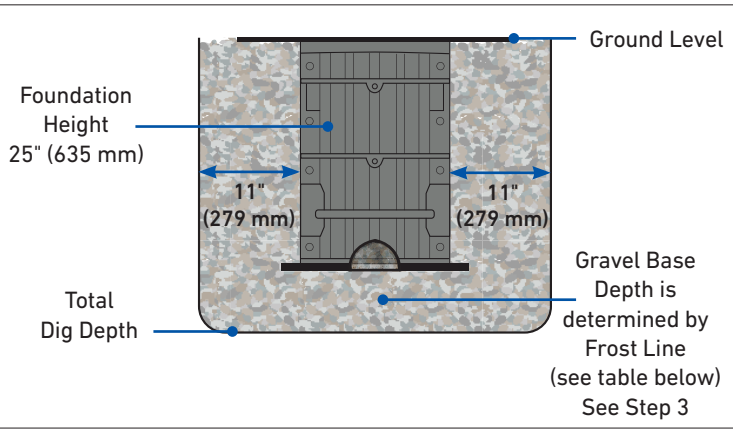

Frost Lines 0-25"	
Total Dig Depth	31" (787 mm)
Gravel Base Depth	6" (152 mm)

Frost Lines 26" and up	
Total Dig Depth	Frost Line + 6" (152 mm)
Gravel Base Depth	Total Dig Depth – (minus) 25" (635 mm) (Foundation Height)

EXAMPLE: 32" Frost Line + 6" = 38" Total Dig Depth
38" Total Dig Depth - 25" = 13" Gravel Base

2 Feed the conduit and route to orient so that the seams are face foward. See images.

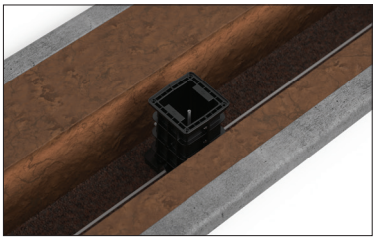

Ground prepared for installation of foundation; conduit has been run.

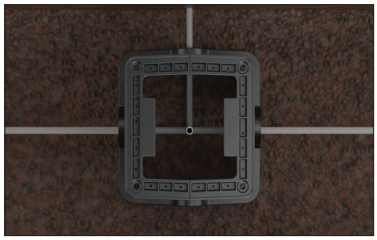

Orient the foundation.

3 Once the foundation is leveled and at the desired height for finishing the EV installation, begin to add gravel in 3-6" (76 mm - 152 mm) layers, compacting each layer with a manual compacting sledge or compacting machine. Ensure level status is maintained and that the gravel is filling the ribs on the exterior of the foundation. Repeat this process until the desired height has been reached. Finish the surrounding area with at least 12" of non-flammable concrete or gravel to maintain the UL certification.

NOTE: Layers of gravel should be compacted every 3" to 6" (76 mm - 152 mm).

PLP recommends using a 3/4" (19 mm) compacted gravel or a locally available bedding stone.

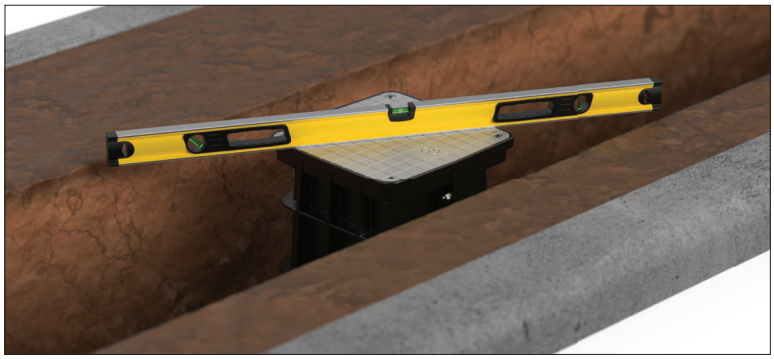

4 Once the foundation is embedded into the gravel and compacted, remove cover and proceed to create a drill pattern using the template or mounting hardware for the charger of choice.

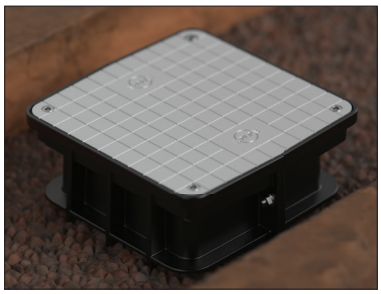

Gravel filled in, in 3"-6" (76 mm - 152 mm) increments, and then hand- or machine-tamped.

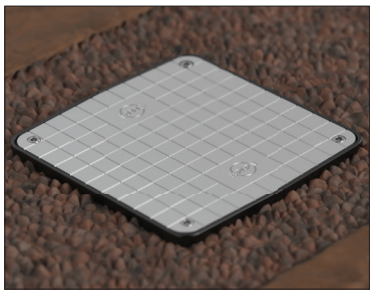

Completed foundation installation.

CHARGER MOUNTING

5 Lay out the new template marking hole locations needed and drill into the aluminum cover. Place star washers on the top part of the bolt to hold the bolts in place.

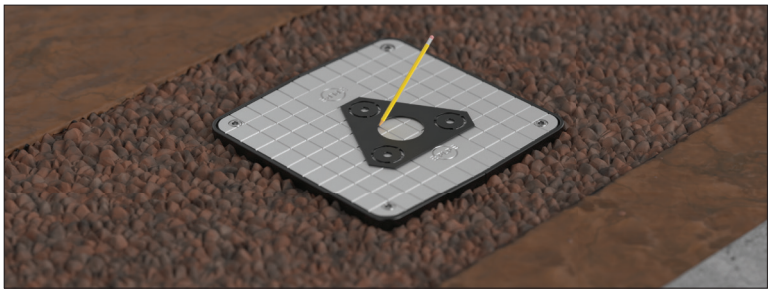

Use the charger's template to determine drill hole pattern. The ChargePoint CT4000 template is shown in the image above.

6

Drill into the center of the cover for the conduit run. Oversize the hole by 1/8" (3 mm) for proper clearance for bushing or wire clamp.

NOTE: Starting with a smaller drill bit and working up makes for a quicker and cleaner job.





7

Attach the mounting bracket or plate for the charger/charger stand.

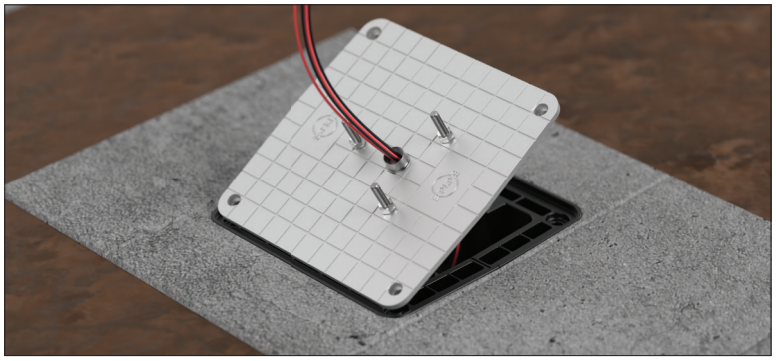

8

After ensuring that no burrs or sharp edges are present, route cable through the large center hole. Extending the conduit up through the hole in the plate or routing just the wire will be a local decision based on the type of charger, mounting pole, and applicable codes.

NOTE: Using a bushing or wire clamp will help protect the wire during routing. PLP highly recommends protecting the wire at any potential contact or rub points.

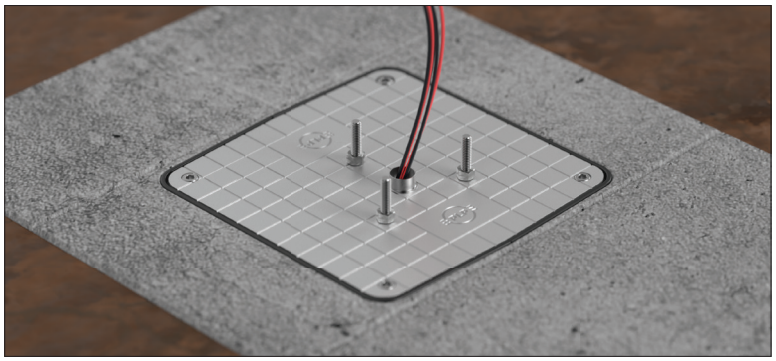

9

Before attaching the aluminum cover, make sure that the foundation rim is clear of any gravel pieces that might make the adapter cover unstable after installation.

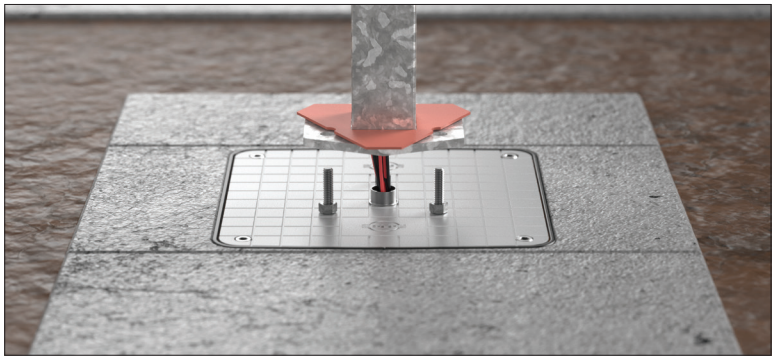

10 Attach the adapter cover with the accompanying 4 bolts through the recessed bolt holes in the top of the plate into the beam inside of the foundation using an M10 Allen wrench.

- If the bolts align with your charger's mounting bracket, they may also be used to attach the charger. PLP recommends that you switch to a hex bolt or a flange bolt for this purpose.
- The maximum torque on the screw is 15 ft-lb.

11 At this point, follow the installation instructions for the charger that you have chosen.

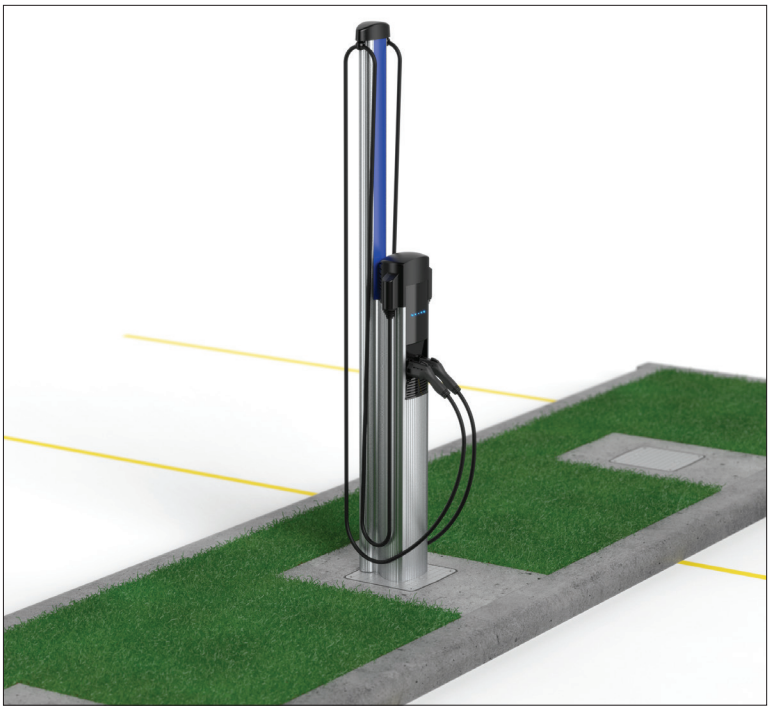

Completed foundation installation, with an attached charger.



GLOBAL HEADQUARTERS
660 BETA DRIVE
CLEVELAND, OH 44143

+1 440 461 5200
INFO@PLP.COM
PLP.COM

© 2024 Preformed Line Products
SP3682-1