Surface-mounting distributor, plastic - VARIABOX - XL



Product description	
BALS-Prd.-Nr	890931
EAN	4024941939232
Product category	VARIABOX - XL
Specification/Norm	DIN EN 61439
Protection degree	IP67
Colour of appliance	Housing bottom simular black RAL 9017, Housing top grey RAL 7035
Height	520mm
Width	230mm
Depth	145mm

Bals Elektrotechnik GmbH & Co. KG D-57399 Kirchhundem - Albaum
phone: +49(0)2723/771-0 / fax: +49(0)2723/771-177 / email: info@bals.com

Product description	
RDF factor	0.62
Nominal current InA	63

Logistics data	
Weight/pcs	7.034 kg / Piece
Packaging	Carton
Content amount	1 ST
EAN	4024941939232
Length	560 mm
Width	270 mm
Height	255 mm
Weight	7.483 kg
Volume	38,556 ccm

VARIABOX by Bals

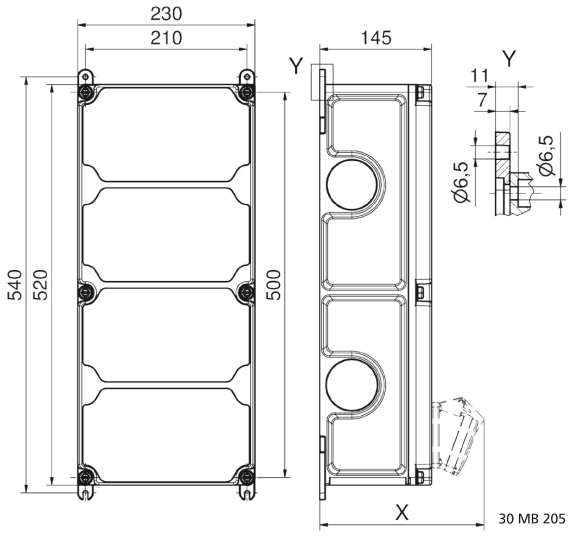

Tiefenmaß/ *depth* X (mm)

Bezeichnung/ with	IP44	IP67
OTC-Klappe/ *OTC operating window*	180	180
Schutzk. Steckdose/*domestic socket*	162	205
CEE 16A 3p	200	200
CEE 16A 4p	204	202
CEE 16A 5p	207	205
CEE 32A 3p/4p	211	213
CEE 32A 5p	213	214
CEE 63A 3p/4p/5p	229	231

Bals Elektrotechnik GmbH & Co. KG D-57399 Kirchhundem - Albaum
phone: +49(0)2723/771-0 / fax: +49(0)2723/771-177 / email: info@bals.com