plastic - wall mounted combination units



Product description	
BALS-Prd.-Nr	89099
EAN	4024941206327
Product category	VARIABOX - XL
Specification/Norm	DIN EN 61439
Type of RCD	Type A
Protection degree	IP44
Colour of appliance	Housing top grey RAL 7035, Housing bottom simular black RAL 9017
Height	520mm
Width	230mm

Bals Elektrotechnik GmbH & Co. KG D-57399 Kirchhundem - Albaum
phone: +49(0)2723/771-0 / fax: +49(0)2723/771-177 / email: info@bals.com

Product description	
Depth	145mm
RDF factor	0.65
Rated current InA	41

Logistics data	
Weight/pcs	6.754 kg / Piece
Packaging	Carton
Content amount	1 ST
EAN	4024941206327
Length	560 mm
Width	270 mm
Height	255 mm
Weight	7.203 kg
Volume	38,556 ccm

Bals Elektrotechnik GmbH & Co. KG D-57399 Kirchhundem - Albaum
phone: +49(0)2723/771-0 / fax: +49(0)2723/771-177 / email: info@bals.com

VARIABOX by Bals

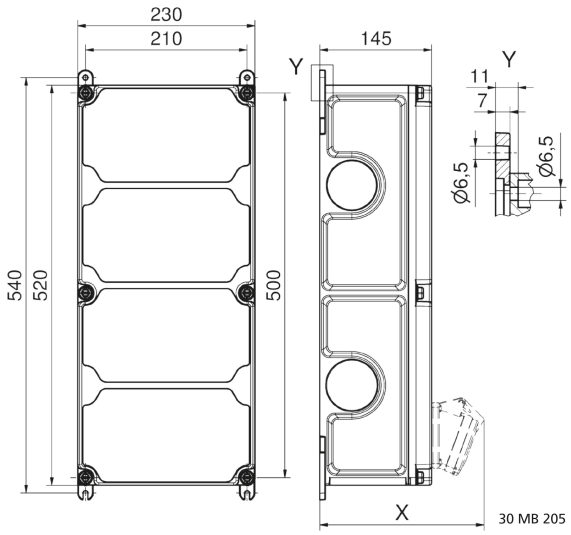

Tiefenmaß/ *depth* X (mm)

Bezeichnung/ with	IP44	IP67
OTC-Klappe/ *OTC operating window*	180	180
Schutzk. Steckdose/*domestic socket*	162	205
CEE 16A 3p	200	200
CEE 16A 4p	204	202
CEE 16A 5p	207	205
CEE 32A 3p/4p	211	213
CEE 32A 5p	213	214
CEE 63A 3p/4p/5p	229	231

Bals Elektrotechnik GmbH & Co. KG D-57399 Kirchhundem - Albaum
phone: +49(0)2723/771-0 / fax: +49(0)2723/771-177 / email: info@bals.com