Cross combination units - Cross combination units



Product description	
BALS-Prd.-Nr	54567
EAN	4024941545679
Product category	Cross distributor
Specification/Norm	DIN EN 61439-2
Protection degree	IP44
Colour of appliance	Housing bottom black RAL 9005, Housing top black RAL 9005
Height	118mm
Width	118mm
Depth	80mm

Bals Elektrotechnik GmbH & Co. KG D-57399 Kirchhundem - Albaum
phone: +49(0)2723/771-0 / fax: +49(0)2723/771-177 / email: info@bals.com

Product description	
RDF factor	0.33
Rated current InA	32

Logistics data	
Weight/pcs	1.098 kg / Piece
Packaging	Carton
Content amount	2 ST
EAN	4024941376631
Length	295 mm
Width	185 mm
Height	215 mm
Weight	2.36 kg
Volume	9,975 ccm

Bals Elektrotechnik GmbH & Co. KG D-57399 Kirchhundem - Albaum
phone: +49(0)2723/771-0 / fax: +49(0)2723/771-177 / email: info@bals.com

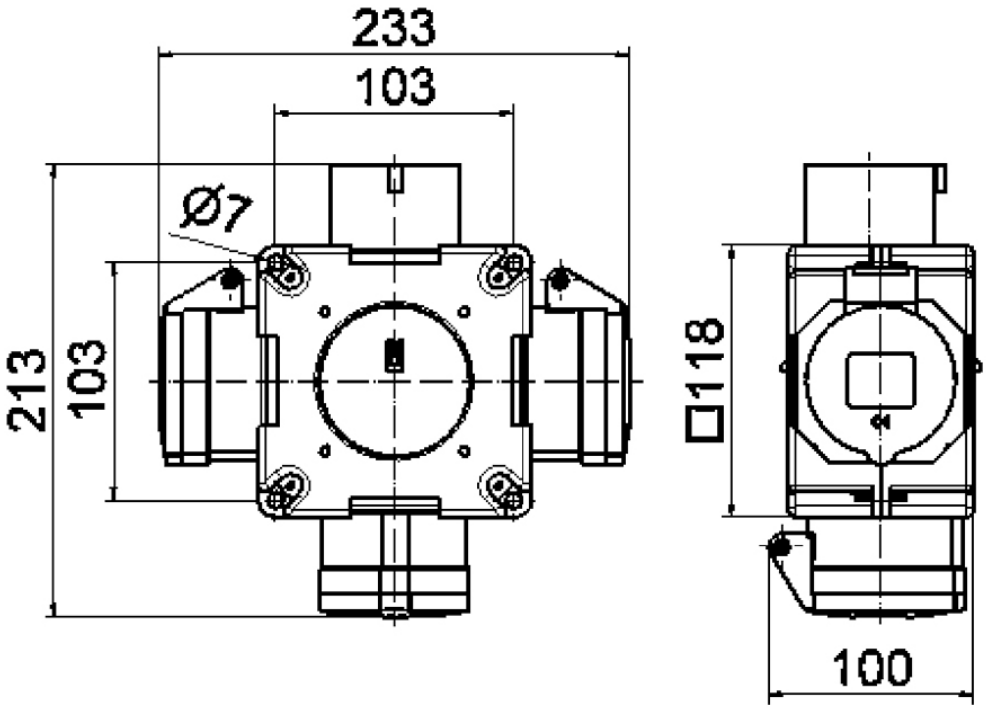

30 MB 061

Bals Elektrotechnik GmbH & Co. KG D-57399 Kirchhundem - Albaum
phone: +49(0)2723/771-0 / fax: +49(0)2723/771-177 / email: info@bals.com