phase sequence indicator - test plug with domestic-type socket



Product description	
BALS-Prd.-Nr	2235
EAN	4024941022354
Product category	Phase sequence indicator TRIPOL
Current	32A
Number of poles	5p
Arangement of phases	3p+N+PE
Position of earth contact	6 h
Voltage	200/346 - 240/415V~

Bals Elektrotechnik GmbH & Co. KG D-57399 Kirchhundem - Albaum
phone: +49(0)2723/771-0 / fax: +49(0)2723/771-177 / email: info@bals.com

Product description	
Frequency	50/60Hz
Protection degree	IP44
Display of the three phases	TRUE
Motor rotation direction test.	TRUE
No-contact detection of direc.	TRUE
Height	175mm
Width	73mm
Depth	73mm

Additional technical information	
	With integrated domestic-type socket outlet 16A 230V AC, German standard type F, Integrated electronic for: rotary field indicator connection of testing devices phase sequence indicator

Logistics data	
Weight/pcs	0.31 kg / Piece
Packaging	Bag
Content amount	1 ST
EAN	4024941022354
Length	73 mm
Width	73 mm
Height	175 mm
Weight	0.311 kg

Bals Elektrotechnik GmbH & Co. KG D-57399 Kirchhundem - Albaum
phone: +49(0)2723/771-0 / fax: +49(0)2723/771-177 / email: info@bals.com

Logistics data	
Volume	932.575 ccm
Packaging	Carton
Content amount	5 ST
EAN	4024941942195
Length	275 mm
Width	175 mm
Height	137 mm
Weight	1.675 kg
Volume	5,737.5 ccm

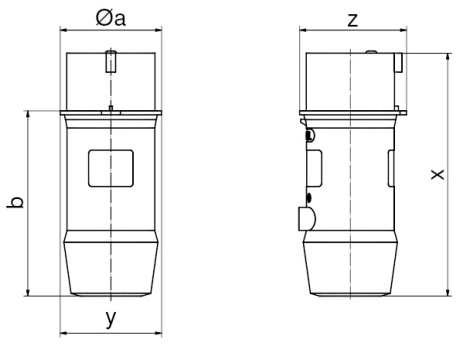

Ampere	16	32
Polzahl	5	5
ø a	64,0	73,0
b	117,0	132,0
x	154,0	177,0
y	64,0	73,0
z	68,0	79,0

Bals Elektrotechnik GmbH & Co. KG D-57399 Kirchhundem - Albaum
phone: +49(0)2723/771-0 / fax: +49(0)2723/771-177 / email: info@bals.com