phase sequence indicator - test plug with domestic-type socket



Product description	
BALS-Prd.-Nr	2234
EAN	4024941022347
Product category	Phase sequence indicator TRIPOL
Current	16A
Number of poles	5p
Arangement of phases	3p+N+PE
Position of earth contact	6 h
Voltage	200/346 - 240/415V~

Bals Elektrotechnik GmbH & Co. KG D-57399 Kirchhundem - Albaum
phone: +49(0)2723/771-0 / fax: +49(0)2723/771-177 / email: info@bals.com

Product description	
Frequency	50/60Hz
Protection degree	IP44
Display of the three phases	TRUE
Motor rotation direction test.	TRUE
No-contact detection of direc.	TRUE
Height	155mm
Width	64mm
Depth	64mm

Additional technical information	
	With integrated domestic-type socket outlet 16A 230V AC, German standard type F, Integrated electronic for: rotary field indicator connection of testing devices phase sequence indicator

Logistics data	
Weight/pcs	0.24 kg / Piece
Packaging	Bag
Content amount	1 ST
EAN	4024941022347
Length	64 mm
Width	64 mm
Height	155 mm
Weight	0.241 kg

Bals Elektrotechnik GmbH & Co. KG D-57399 Kirchhundem - Albaum
phone: +49(0)2723/771-0 / fax: +49(0)2723/771-177 / email: info@bals.com

Logistics data	
Volume	634.88 ccm
Packaging	Carton
Content amount	10 ST
EAN	4024941964524
Length	245 mm
Width	177 mm
Height	185 mm
Weight	2.533 kg
Volume	7,140 ccm

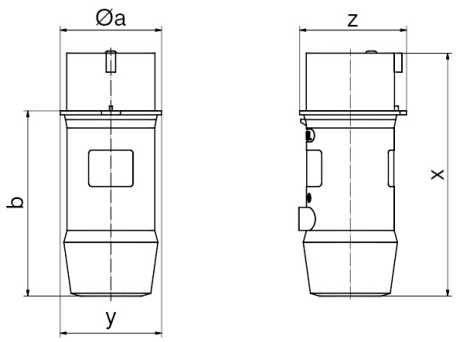

Ampere	16	32
Polzahl	5	5
ø a	64,0	73,0
b	117,0	132,0
x	154,0	177,0
y	64,0	73,0
z	68,0	79,0

Bals Elektrotechnik GmbH & Co. KG D-57399 Kirchhundem - Albaum
phone: +49(0)2723/771-0 / fax: +49(0)2723/771-177 / email: info@bals.com