connector - for refeer containers, with cable gland



Product description	
BALS-Prd.-Nr	310426
EAN	4024941107105
Product category	QUICK-CONNECT TE connector
Current	32A
Number of poles	4p
Arangement of phases	3P+PE
Position of earth contact	3 h
Voltage	380V~(50Hz) 440V~(60Hz)
Frequency	50/60Hz

Bals Elektrotechnik GmbH & Co. KG D-57399 Kirchhundem - Albaum
phone: +49(0)2723/771-0 / fax: +49(0)2723/771-177 / email: info@bals.com

Product description	
Protection degree	IP67/69
Colour code	red RAL 3000
Colour of appliance	Bayonet ring grey RAL 7035, Cable gland grey RAL 7035, Enclosure red RAL 3000, Hinged lid red RAL 3000
Connection design	screwless spring terminals with Kontex-Kontakt
Maximum conductor size	6,0 qmm
Cable entry	with cable gland
Height	198mm
Width	94mm
Depth	97mm
Material of enclosure	Polyamide
Contacts	The contact carrier is made of high temperature resistant material, the contacts are brass nickel plated

Logistics data	
Weight/pcs	0.329 kg / Piece
Packaging	Bag
Content amount	1 ST
EAN	4024941107105
Length	97 mm
Width	94 mm
Height	198 mm

Bals Elektrotechnik GmbH & Co. KG D-57399 Kirchhundem - Albaum
phone: +49(0)2723/771-0 / fax: +49(0)2723/771-177 / email: info@bals.com

Logistics data	
Weight	0.33 kg
Volume	1,805.364 ccm
Packaging	Carton
Content amount	10 ST
EAN	4024941962605
Length	325 mm
Width	217 mm
Height	210 mm
Weight	3.496 kg
Volume	13,588.4 ccm

Bals Elektrotechnik GmbH & Co. KG D-57399 Kirchhundem - Albaum
phone: +49(0)2723/771-0 / fax: +49(0)2723/771-177 / email: info@bals.com

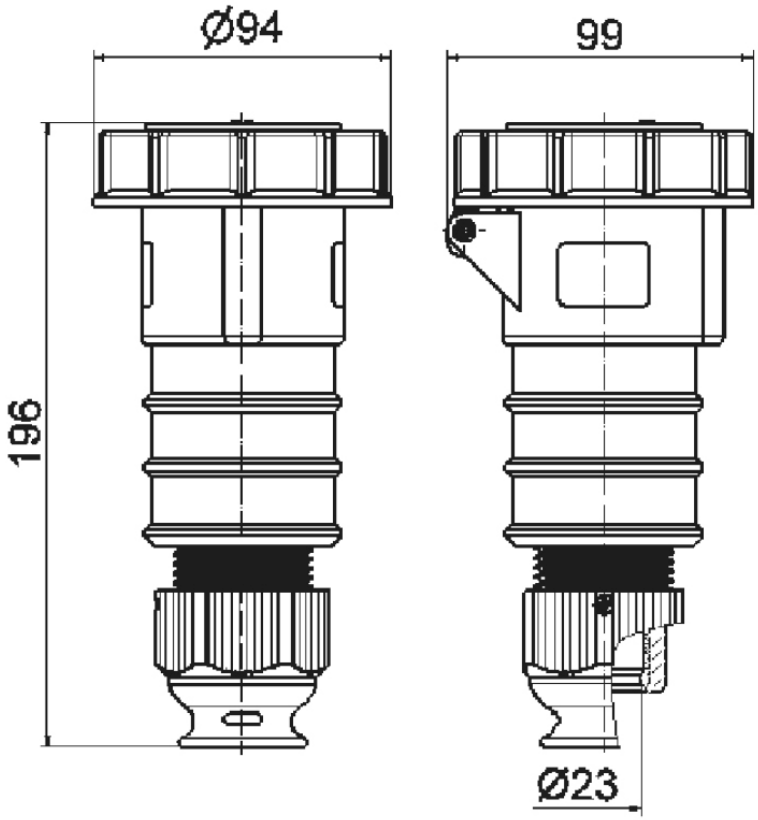

3 MB 72

Bals Elektrotechnik GmbH & Co. KG D-57399 Kirchhundem - Albaum
phone: +49(0)2723/771-0 / fax: +49(0)2723/771-177 / email: info@bals.com