wall mounting socket outlet, switched, interlocked - for reefer containers, housing dimensions 225x118



Product description	
BALS-Prd.-Nr	16050
EAN	4024941160506
Product category	TE wall mounting socket outlet, switched, interlocked
Current	32A
Number of poles	4p
Arangement of phases	3P+PE
Position of earth contact	3 h
Voltage	380V~(50Hz) 440V~(60Hz)

Bals Elektrotechnik GmbH & Co. KG D-57399 Kirchhundem - Albaum
phone: +49(0)2723/771-0 / fax: +49(0)2723/771-177 / email: info@bals.com

Product description	
Frequency	50/60Hz
Protection degree	IP67/69
Colour code	red RAL 3000
Colour of appliance	Hinged lid red RAL 3000, Housing bottom grey RAL 7035, Housing screws grey RAL 7035, Bayonet ring grey RAL 7035, Housing top grey RAL 7035, Control knob grey RAL 7035
Connection design	screwless spring terminals with Kontex-Kontakt
Maximum conductor size	10,0 qmm
Cable entry	top entry M25/M25 bottom entry M25
Height	260mm
Width	118mm
Depth	144mm
Dimension of enclosure	225x118 mm (HxW)
Material of enclosure	Polycarbonate
Contacts	the contacts are brass nickel plated, The contact carrier is made of polyamide

Additional technical information	
	The cable entry is one at top open, one at top is closed, and two at bottom are closed
	In 0-position lockable for 3 padlocks with bow diameter up to 7 mm

Logistics data	
Weight/pcs	1.24 kg / Piece

Bals Elektrotechnik GmbH & Co. KG D-57399 Kirchhundem - Albaum
phone: +49(0)2723/771-0 / fax: +49(0)2723/771-177 / email: info@bals.com

Logistics data	
Packaging	Carton
Content amount	1 ST
EAN	4024941160506
Length	275 mm
Width	175 mm
Height	137 mm
Weight	1.365 kg
Volume	5,737.5 ccm

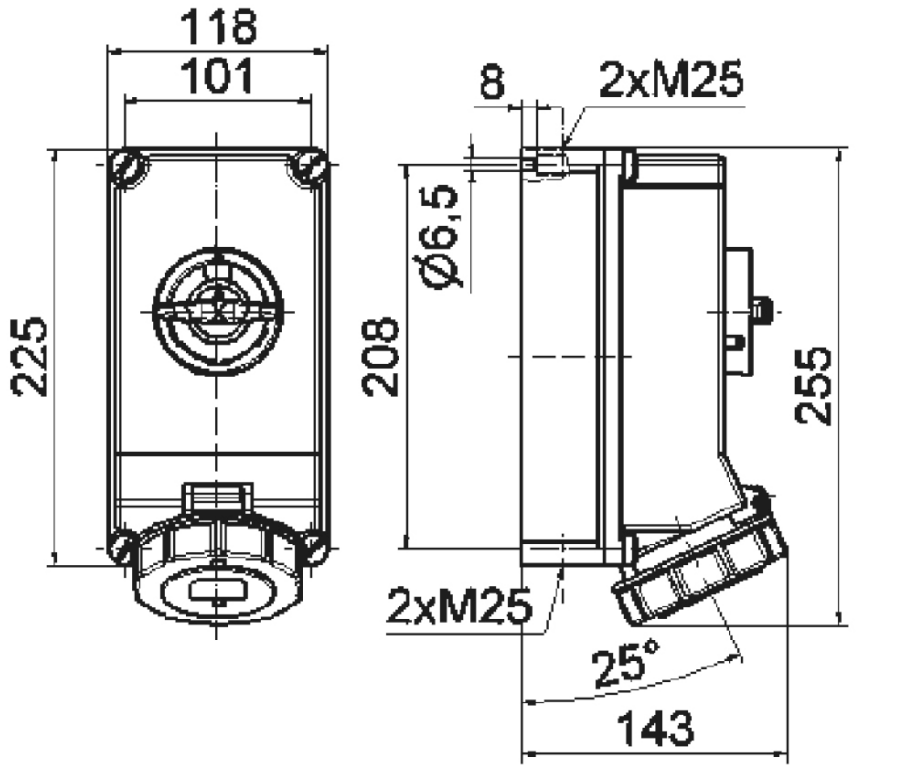

12 MB 27

Bals Elektrotechnik GmbH & Co. KG D-57399 Kirchhundem - Albaum
phone: +49(0)2723/771-0 / fax: +49(0)2723/771-177 / email: info@bals.com