plug low voltage - with cable gland, MULTI-GRIP



Product description	
BALS-Prd.-Nr	4427
EAN	4024941044271
Product category	ELV plug
Current	16A
Number of poles	2p
Arangement of phases	2P
Position of earth contact	10 h
Frequency	DC
Protection degree	IP44

Bals Elektrotechnik GmbH & Co. KG D-57399 Kirchhundem - Albaum
phone: +49(0)2723/771-0 / fax: +49(0)2723/771-177 / email: info@bals.com

Product description	
Colour code	grey RAL 7035
Colour of appliance	Collar grey RAL 7035, Housing cover grey RAL 7035, Cable gland grey RAL 7035
Connection design	with screw terminal
Maximum conductor size	10,0 qmm
Cable entry	with cable gland
Height	141mm
Width	62mm
Depth	57mm
Material of enclosure	Polyamide
Contacts	The contact carrier is made of polyamide, the contacts are brass nickel plated

Additional technical information	
	MULTI-GRIP cable gland with gasket and integrated strain relief, For cable diameter from 11 up to max. 23,5 mm

Logistics data	
Weight/pcs	0.144 kg / Piece
Packaging	Bag
Content amount	1 ST
EAN	4024941044271
Length	57 mm

Bals Elektrotechnik GmbH & Co. KG D-57399 Kirchhundem - Albaum
phone: +49(0)2723/771-0 / fax: +49(0)2723/771-177 / email: info@bals.com

Logistics data	
Width	62 mm
Height	141 mm
Weight	0.145 kg
Volume	498.294 ccm
Packaging	Carton
Content amount	10 ST
EAN	4024941819671
Length	248 mm
Width	158 mm
Height	123 mm
Weight	1.537 kg
Volume	3,960 ccm

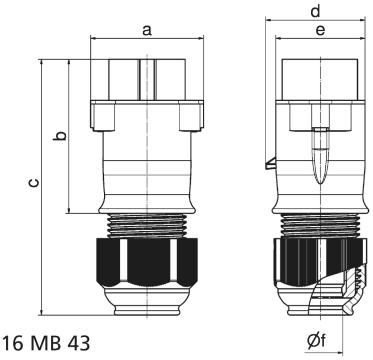

16 MB 43

Ampere	16	16	32	32
Polzahl	2	3	2	3
a	62,0	62,0	62,0	62,0
b	85,0	85,0	85,0	85,0
c	140,0	140,0	140,0	140,0
d	55,0	55,0	55,0	55,0
e	50,0	50,0	50,0	50,0
f ø	24,5	24,5	24,5	24,5
Leiter mm² min	4	4	4	4
Leiter mm² max	10	10	10	10

Bals Elektrotechnik GmbH & Co. KG D-57399 Kirchhundem - Albaum
phone: +49(0)2723/771-0 / fax: +49(0)2723/771-177 / email: info@bals.com