wall mounting socket outlet low voltage - housing dimensions 80x70



Product description	
BALS-Prd.-Nr	415
EAN	4024941004152
Product category	ELV wall mounting socket outlet
Current	16A
Number of poles	2p
Arangement of phases	2P
Position of earth contact	10 h
Frequency	DC

Bals Elektrotechnik GmbH & Co. KG D-57399 Kirchhundem - Albaum
phone: +49(0)2723/771-0 / fax: +49(0)2723/771-177 / email: info@bals.com

Product description	
Protection degree	IP44
Colour code	grey RAL 7035
Colour of appliance	Hinged lid grey RAL 7035, Collar grey RAL 7035, Housing bottom grey RAL 7035, Housing top grey RAL 7035
Connection design	with screw terminal
Maximum conductor size	10,0 qmm
Cable entry	top entry M25
Height	113mm
Width	70mm
Depth	79mm
Dimension of enclosure	80x70 mm (HxW)
Material of enclosure	Polyamide
Contacts	The contact carrier is made of polyamide, the contacts are brass nickel plated

Additional technical information	
	The cable entry is one at top open

Logistics data	
Weight/pcs	0.177 kg / Piece
Packaging	Bag
Content amount	1 ST
EAN	4024941004152

Bals Elektrotechnik GmbH & Co. KG D-57399 Kirchhundem - Albaum
phone: +49(0)2723/771-0 / fax: +49(0)2723/771-177 / email: info@bals.com

Logistics data	
Length	79 mm
Width	70 mm
Height	113 mm
Weight	0.178 kg
Volume	624.89 ccm
Packaging	Carton
Content amount	10 ST
EAN	4024941962988
Length	245 mm
Width	177 mm
Height	185 mm
Weight	1.903 kg
Volume	7,140 ccm

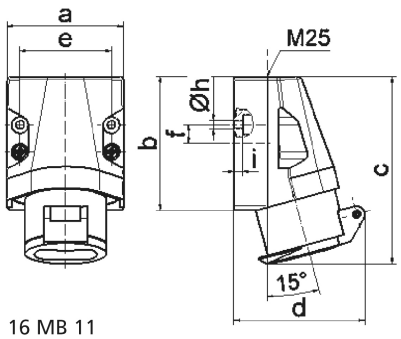

16 MB 11

Ampere	16	16	32	32		
Polzahl	2	3	2	3		
a	70,0	70,0	70,0	70,0		
b	80,0	80,0	80,0	80,0		
c	113,0	113,0	113,0	113,0		
d	80,0	80,0	80,0	80,0		
e	55,0	55,0	55,0	55,0		
f	11,0	11,0	11,0	11,0		
h ø	5,2	5,2	5,2	5,2		
i	5,0	5,0	5,0	5,0		
Leiter mm² min	4	4	4	4		
Leiter mm² max	10	10	10	10		

Bals Elektrotechnik GmbH & Co. KG D-57399 Kirchhundem - Albaum
phone: +49(0)2723/771-0 / fax: +49(0)2723/771-177 / email: info@bals.com