Connector - 7 poles with Multi-Grip



Product description	
BALS-Prd.-Nr	31752
EAN	4024941317528
Product category	TE connector
Current	16A
Number of poles	7p
Arangement of phases	6p+PE
Position of earth contact	6 h
Voltage	400V~
Frequency	50/60Hz

Bals Elektrotechnik GmbH & Co. KG D-57399 Kirchhundem - Albaum
phone: +49(0)2723/771-0 / fax: +49(0)2723/771-177 / email: info@bals.com

Product description	
Protection degree	IP44
Colour code	red RAL 3000
Colour of appliance	Hinged lid red RAL 3000, Enclosure red RAL 3000, Cable gland grey RAL 7035
Connection design	with screw terminal
Maximum conductor size	2,5 qmm
Cable entry	Cable gland
Height	173mm
Width	65mm
Depth	86mm
Material of enclosure	Polyamide
Contacts	The contact carrier is made of high temperature resistant material, the contacts are brass nickel plated

Additional technical information	
	For cable diameter from 10 up to max. 21 mm, Multi-Grip cable gland with gasket, integrated cable clamp and additional water evacuation openings

Logistics data	
Weight/pcs	0.248 kg / Piece
Packaging	Bag
Content amount	1 ST
EAN	4024941317528

Bals Elektrotechnik GmbH & Co. KG D-57399 Kirchhundem - Albaum
phone: +49(0)2723/771-0 / fax: +49(0)2723/771-177 / email: info@bals.com

Logistics data	
Length	86 mm
Width	65 mm
Height	173 mm
Weight	0.249 kg
Volume	967.07 ccm
Packaging	Carton
Content amount	10 ST
EAN	4024941959056
Length	245 mm
Width	177 mm
Height	185 mm
Weight	2.613 kg
Volume	7,140 ccm

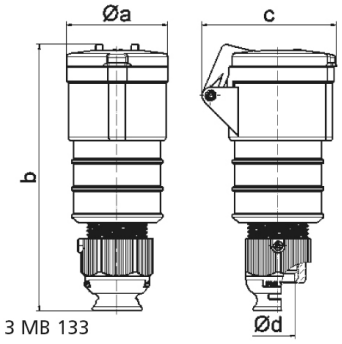

Ampere	16	32
Polzahl	7	7
a ø	65,0	72,0
b	168,0	198,0
c	86,0	99,0
d ø	21,0	27,0
Leiter mm² min	1	2,5
Leiter mm² max	2,5	6

Bals Elektrotechnik GmbH & Co. KG D-57399 Kirchhundem - Albaum
phone: +49(0)2723/771-0 / fax: +49(0)2723/771-177 / email: info@bals.com