connector - with screwless terminals, for harsh applications



Product description	
BALS-Prd.-Nr	31247
EAN	4024941312479
Product category	QUICK-CONNECT TE connector
Current	32A
Number of poles	5p
Arangement of phases	3p+N+PE
Position of earth contact	6 h
Voltage	200/346 - 240/415V~

Bals Elektrotechnik GmbH & Co. KG D-57399 Kirchhundem - Albaum
phone: +49(0)2723/771-0 / fax: +49(0)2723/771-177 / email: info@bals.com

Product description	
Frequency	50/60Hz
Protection degree	IP67/69
Colour code	red RAL 3000
Colour of appliance	Bayonet ring grey RAL 7035, Hinged lid red RAL 3000, Enclosure red RAL 3000, Cable gland grey RAL 7035
Connection design	screwless spring terminals with Kontex-Kontakt
Maximum conductor size	6,0 qmm
Cable entry	with cable gland
Height	196mm
Width	101.5mm
Depth	106mm
Material of enclosure	Polyamide
Contacts	The contact carrier is made of high temperature resistant material, the contacts are brass nickel plated

Additional technical information	
	For cable diameter from 13 up to max. 27 mm, MULTI-GRIP cable gland with gasket, integrated cable clamp and additional water evacuation openings

Logistics data	
Weight/pcs	0.397 kg / Piece
Packaging	Bag

Bals Elektrotechnik GmbH & Co. KG D-57399 Kirchhundem - Albaum
phone: +49(0)2723/771-0 / fax: +49(0)2723/771-177 / email: info@bals.com

Logistics data	
Content amount	1 ST
EAN	4024941312479
Length	106 mm
Width	101.5 mm
Height	196 mm
Weight	0.398 kg
Volume	2,108.764 ccm
Packaging	Carton
Content amount	10 ST
EAN	4024941958387
Length	330 mm
Width	216 mm
Height	260 mm
Weight	4.196 kg
Volume	17,062.5 ccm

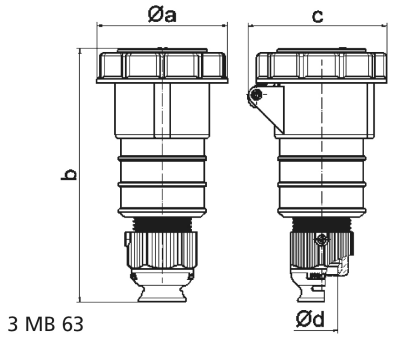

Ampere Polzahl	16 3	16 4	16 5	32 3	32 4	32 5
a ø	70,5	78,0	86,5	94,0	94,0	101,5
b	161,0	161,0	168,0	196,0	196,0	200,0
c	77,0	83,0	93,0	99,0	99,0	107,0
d ø	18,0	18,0	21,0	23,0	23,0	27,0
Leiter mm^2 min	1	1	1	2,5	2,5	2,5
Leiter mm^2 max	2,5	2,5	2,5	6	6	6

Bals Elektrotechnik GmbH & Co. KG D-57399 Kirchhundem - Albaum
phone: +49(0)2723/771-0 / fax: +49(0)2723/771-177 / email: info@bals.com